Accredited testing laboratory

DAR registration number: DAT-P-176/94-D1

Federal Motor Transport Authority (KBA)
DAR registration number: KBA-P 00070-97

Test report no. : 2-4203-01-03/05
Type identification : GIGASET M34
Test specification : IEEE P1528/D1.2
FCC-ID : TVU-M34USB
Certification-No.IC : 267U-M34USB

Table of Contents

1 General Information ... 3
1.1 Notes ... 3
1.1.1 Statement of Compliance ... 3
1.2 Testing laboratory ... 4
1.3 Details of applicant ... 4
1.4 Application details ... 4
1.5 Test item ... 5
1.6 Test specification(s) ... 6
1.6.1 RF exposure limits ... 6
2 Technical test ... 7
2.1 Summary of test results ... 7
2.2 Test environment ... 7
2.3 Measurement and test set-up ... 7
2.4 Measurement system ... 8
2.4.1 System Description ... 8
2.4.2 Test environment ... 9
2.4.3 Probe description ... 9
2.4.4 Phantom description ... 9
2.4.5 Device holder description ... 9
2.4.6 Scanning procedure ... 9
2.4.7 Spatial Peak SAR Evaluation ... 9
2.4.8 Data Storage and Evaluation ... 9
2.4.9 Test equipment utilized ... 9
2.4.10 Tissue simulating liquids: dielectric properties ... 9
2.4.11 Tissue simulating liquids: parameters ... 9
2.4.12 Measurement uncertainty evaluation for SAR test ... 9
2.4.13 Measurement uncertainty evaluation for system validation ... 9
2.4.14 System validation ... 9
2.4.15 Validation procedure ... 9
2.5 Test results (Body SAR) ... 9
2.6 Test results (conducted power measurement) ... 9

Annex 1 System performance verification ... 9
Annex 2 Measurement results (printout from DASY TM) ... 9
Annex 2.1 Z-axis scan ... 9
Annex 3 Photo documentation ... 9
Annex 4 RF Technical Brief Cover Sheet acc. to RSS-102 ... 9
Annex 4.1 Declaration of RF Exposure Compliance ... 9
Annex 5 Calibration parameters ... 9

1 General Information

1.1 Notes

The test results of this test report relate exclusively to the test item specified in 1.5. The CETECOM ICT Services GmbH does not assume responsibility for any conclusions and generalisations drawn from the test results with regard to other specimens or samples of the type of the equipment represented by the test item. The test report may only be reproduced or published in full. Reproduction or publication of extracts from the report requires the prior written approval of the CETECOM ICT Services GmbH.

1.1.1 Statement of Compliance

The SAR values found for the GIGASET M34 UPCS USB Adapter are below the maximum recommended levels of 1.6 W/Kg as averaged over any 1 g tissue according to the FCC rule §2.1093, the ANSI/IEEE C 95.1:1999, the NCRP Report Number 86 for uncontrolled environment, according to the Health Canada's Safety Code 6 and the Industry Canada Radio Standards Specification RSS-102 for General Population/Uncontrolled exposure.
For body worn operation, this phone has been tested and meets FCC RF exposure guidelines when used with any accessory that contains no metal and that positions the handset a minimum of 15 mm from the body. Use of other accessories may not ensure compliance with FCC RF exposure guidelines.
The measurement together with the test system set-up is described in chapter 2.3 of this test report. A detailed description of the equipment under test can be found in chapter 1.5.

Test engineer:

2006-02-06	**Oleksandr Hnatovskiy**	
Date	Name	Signature

Technical responsibility for area of testing:

2006-02-06	**Thomas Vogler**	Thomas Vogler
Date	Name	Signature

1.2 Testing laboratory

CETECOM ICT Services GmbH
Untertuerkheimer Straße 6-10,
66117 Saarbruecken
Germany
Telephone: + 49 681 598 - 0
Fax: + 49 681 598 - 8475

e-mail: info@ict.cetecom.de
Internet: http://www.cetecom-ict.de

State of accreditation: The Test laboratory (area of testing) is accredited according to DIN EN ISO/IEC 17025. DAR registration number: DAT-P-176/94-D1

Test location, if different from CETECOM ICT Services GmbH

Name: ---
Street: ---
Town: ---
Country: ---
Phone: ---
Fax: ---

1.3 Details of applicant

Name: Siemens Home and Office Communication Devices GmbH & Co.KG
Street: Frankenstr. 2
Town: 46395 Bocholt
Country: Germany

Contact: Uwe Alt
Telephone: +49 (0) 2871 91-28 57

1.4 Application details

Date of receipt of application: 2006-01-27
Date of receipt of test item: 2006-01-30
Start/Date of test: 2006-01-31
End of test: 2006-01-31

Person(s) present during the test: Mr. Jürgen Voigt

1.5 Test item

Description of the test item: UPCS USB Adapter

Type identification: GIGASET M34

FCC-ID : TVU-M34USB
Certification No. IC 267U-M34USB
Serial number: N/A

Manufacturer:

Name: Siemens Home and Office Communication
Street: Frankenstr. 2
Town: 46395 Bocholt
Country: Germany

additional information on the DUT:	
device type:	portable device
exposure category:	uncontrolled environment / general population
test device production information	identical prototype
device operating configurations:	
operating mode(s)	UPCS
modulation	TDMA
maximum no. of timeslots in uplink:	1 of 24
operating frequency range(s)	UPCS 1900 (tested)
	1921.5 MHz ~ 1928.5 MHz (channels 1 to 5)
test channels (low – mid – high):	3 (1900 MHz band)
measured peak output power (conducted):	19.6 dBm
hardware version:	N/A
software version:	N/A
antenna type:	Integrated antenna
auxiliary equipment	notebook 1 : Siemens Fujitsu Lifebook FPC07056B
	notebook 2 : Sony Vaio PCG-9326
	notebook 3 : Sony Vaio PCG-5A2M

1.6 Test specification(s)

Supplement C (Edition 01-01) to OET Bulletin 65 (Edition 97-01)

IEEE P1528/D1.2 (April 21, 2003)

RSS-102: Radio Frequency Exposure Compliance of Radiocommunication Apparatus (All Frequency Bands (Issue 2 of November 2005)

Canada's Safety Code 6: Limits of Human Exposure to Radiofrequency Electromagnetic Fields in the Frequency Range from 3 kHz to 300 GHz (99-EHD-237)

IEEE Std C95.3 – 1991, IEEE Recommended Practice for the Measurement of Potentially Hazardous Electromagnetic Fields – RF and Microwave.

IEEE Std C95.1 – 1999, IEEE Standard for Safety Levels with Respect to Human Exposure to Radio Frequency Electromagnetic Fields, 3 kHz – 300 GHz.

1.6.1 RF exposure limits

Human Exposure	Uncontrolled Environment General Population	Controlled Environment Occupational
Spatial Peak SAR* (Brain)	**1.60 mW/g**	8.00 mW/g
Spatial Average SAR** (Whole Body)	0.08 mW/g	0.40 mW/g
Spatial Peak SAR*** (Hands/Feet/Ankle/Wrist)	4.00 mW/g	20.00 mW/g

Table 1: RF exposure limits

The limit applied in this test report is shown in **bold** letters

Notes:

* The Spatial Peak value of the SAR averaged over any 1 gram of tissue (defined as a tissue volume in the shape of a cube) and over the appropriate averaging time

** The Spatial Average value of the SAR averaged over the whole body.

*** The Spatial Peak value of the SAR averaged over any 10 grams of tissue (defined as a tissue volume in the shape of a cube) and over the appropriate averaging time.

Uncontrolled Environments are defined as locations where there is the exposure of individuals who have no knowledge or control of their exposure.

Controlled Environments are defined as locations where there is exposure that may be incurred by persons who are aware of the potential for exposure, (i.e. as a result of employment or occupation).

2 Technical test

2.1 Summary of test results

No deviations from the technical specification(s) were ascertained in the course of the tests performed.	☒
The deviations as specified in 2.5 were ascertained in the course of the tests performed.	☐

2.2 Test environment

General Environment conditions in the test area are as follows:

Ambient temperature: 20°C – 24°C
Tissue simulating liquid: 20°C – 24°C
Humidity: 40% – 50%

Exact temperature values for each test are shown in the table(s) under 2.5. and/or on the measurement plots.

2.3 Measurement and test set-up

The measurement system is described in chapter 2.4.

The test setup for the system validation can be found in chapter 2.4.14.

A description of positioning and test signal control can be found in chapter 2.5 together with the test results.

2.4 Measurement system

2.4.1 System Description

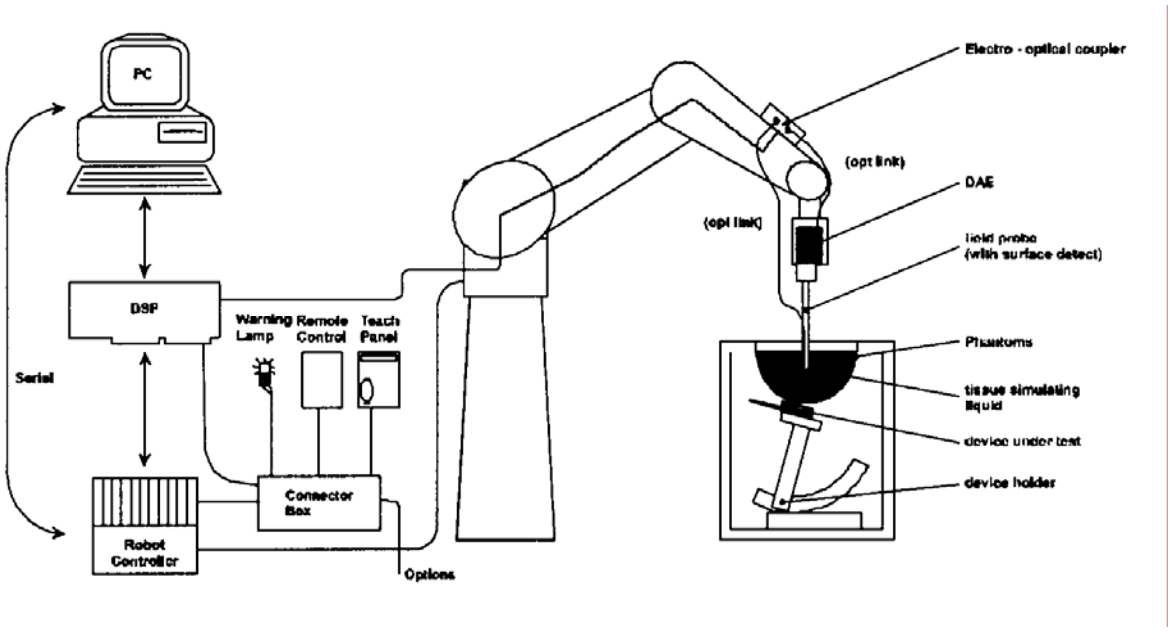

The DASY4 system for performing compliance tests consists of the following items:

- A standard high precision 6-axis robot (Stäubli RX family) with controller and software. An arm extension for accommodating the data acquisition electronics (DAE).

- A dosimetric probe, i.e. an isotropic E-field probe optimized and calibrated for usage in tissue simulating liquid. The probe is equipped with an optical surface detector system.

- A data acquisition electronic (DAE) which performs the signal amplification, signal multiplexing, AD-conversion, offset measurements, mechanical surface detection, collision detection, etc. The unit is battery powered with standard or rechargeable batteries. The signal is optically transmitted to the EOC.
- A unit to operate the optical surface detector which is connected to the EOC.
- The Electro-Optical Coupler (EOC) performs the conversion from the optical into a digital electric signal of the DAE. The EOC is connected to the DASY4 measurement server.
- The DASY4 measurement server, which performs all real-time data evaluation for field measurements and surface detection, controls robot movements and handles safety operation. A computer operating Windows 2000
- DASY4 software and SEMCAD data evaluation software.
- Remote control with teach panel and additional circuitry for robot safety such as warning lamps, etc.
- The generic twin phantom enabling the testing of left-hand and right-hand usage.
- The device holder for handheld mobile phones.
- Tissue simulating liquid mixed according to the given recipes.
- System validation dipoles allowing to validate the proper functioning of the system.

2.4.2 Test environment

The DASY4 measurement system is placed at the head end of a room with dimensions:
5 x 2.5 x 3 m³, the SAM phantom is placed in a distance of 75 cm from the side walls and 1.1m from the rear wall. Above the test system a 1.5 x 1.5 m² array of pyramid absorbers is installed to reduce reflections from the ceiling.
Picture 1 of the photo documentation shows a complete view of the test environment.
The system allows the measurement of SAR values larger than 0.005 mW/g.

2.4.3 Probe description

Isotropic E-Field Probe ET3DV6 for Dosimetric Measurements

Technical data according to manufacturer information	
Construction	Symmetrical design with triangular core Built-in optical fiber for surface detection system Built-in shielding against static charges PEEK enclosure material (resistant to organic solvents, e.g., glycolether)
Calibration	In air from 10 MHz to 2.5 GHz In head tissue simulating liquid (HSL) at 900 (800-1000) MHz and 1.8 GHz (1700-1910 MHz) (accuracy ± 9.5%; k=2) Calibration for other liquids and frequencies upon request
Frequency	10 MHz to 3 GHz (dosimetry); Linearity: ± 0.2 dB (30 MHz to 3 GHz)
Directivity	± 0.2 dB in HSL (rotation around probe axis) ± 0.4 dB in HSL (rotation normal to probe axis)
Dynamic range	5 µW/g to > 100 mW/g; Linearity: ± 0.2 dB
Optical Surface Detection	± 0.2 mm repeatability in air and clear liquids over diffuse reflecting surfaces (ET3DV6 only)
Dimensions	Overall length: 330 mm Tip length: 16 mm Body diameter: 12 mm Tip diameter: 6.8 mm Distance from probe tip to dipole centers: 2.7 mm
Application	General dosimetry up to 3 GHz Compliance tests of mobile phones Fast automatic scanning in arbitrary phantoms (ET3DV6)

2.4.4 Phantom description

The used SAM Phantom meets the requirements specified in Edition 01-01 of Supplement C to OET Bulletin 65 for Specific Absorption Rate (SAR) measurements.
The phantom consists of a fibreglass shell integrated in a wooden table. It allows left-hand and right-hand head as well as body-worn measurements with a maximum liquid depth of 18 mm in head position and 22 mm in planar position (body measurements). The thickness of the Phantom shell is 2 mm +/- 0.1 mm.

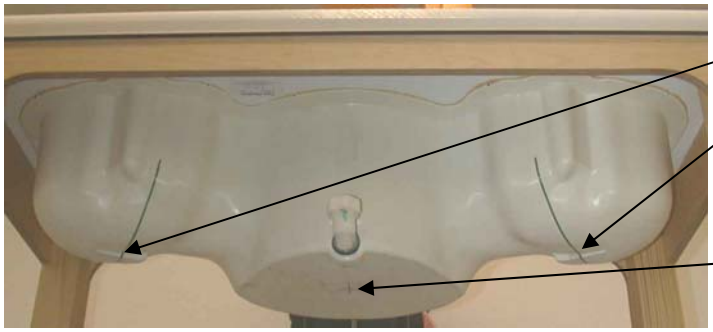

2.4.5 Device holder description

The DASY4 device holder has two scales for device rotation (with respect to the body axis) and the device inclination (with respect to the line between the ear openings). The plane between the ear openings and the mouth tip has a rotation angle of 65°. The bottom plate contains three pair of bolts for locking the device holder. The device holder positions are adjusted to the standard measurement positions in the three sections. This device holder is used for standard mobile phones or PDA's only. If necessary an additional support of polystyrene material is used.

Larger DUT's (e.g. notebooks) cannot be tested using this device holder. Instead a support of bigger polystyrene cubes and thin polystyrene plates is used to position the DUT in all relevant positions to find and measure spots with maximum SAR values.
Therefore those devices are normally only tested at the flat part of the SAM.

2.4.6 Scanning procedure

The DASY4 installation includes predefined files with recommended procedures for measurements and validation. They are read-only document files and destined as fully defined but unmeasured masks. All test positions (head or body-worn) are tested with the same configuration of test steps differing only in the grid definition for the different test positions.

- The „reference“ and „drift“ measurements are located at the beginning and end of the batch process. They measure the field drift at one single point in the liquid over the complete procedure. The indicated drift is mainly the variation of the DUT’s output power and should vary max. +/- 5 %.

- The „surface check“ measurement tests the optical surface detection system of the DASY4 system by repeatedly detecting the surface with the optical and mechanical surface detector and comparing the results. The output gives the detecting heights of both systems, the difference between the two systems and the standard deviation of the detection repeatability. Air bubbles or refraction in the liquid due to separation of the sugar-water mixture gives poor repeatability (above ± 0.1mm). To prevent wrong results tests are only executed when the liquid is free of air bubbles. The difference between the optical surface detection and the actual surface depends on the probe and is specified with each probe. (It does not depend on the surface reflectivity or the probe angle to the surface within ± 30°.)

- The „area scan“ measures the SAR above the DUT or verification dipole on a parallel plane to the surface. It is used to locate the approximate location of the peak SAR with 2D spline interpolation. The robot performs a stepped movement along one grid axis while the local electrical field strenth is measured by the probe. The probe is touching the surface of the SAM during acquisition of measurement values. The standard scan uses large grid spacing for faster measurement. Standard grid spacing for head measurements is 15 mm in x- and y- dimension. If a finer resolution is needed, the grid spacing can be reduced. Grid spacing and orientation have no influence on the SAR result. For special applications where the standard scan method does not find the peak SAR within the grid, e.g. mobile phones with flip cover, the grid can be adapted in orientation.
  Results of this coarse scan are shown in annex 2.

- A „7x7x7 zoom scan” measures the field in a volume around the 2D peak SAR value acquired in the previous „coarse“ scan. This is a fine 7x7 grid where the robot additionally moves the probe in 7 steps along the z-axis away from the bottom of the Phantom. Grid spacing for the cube measurement is 5 mm in x and y-direction and 5 mm in z-direction. DASY4 is also able to perform repeated zoom scans if more than 1 peak is found during area scan. In this document, the evaluated peak 1g and 10g averaged SAR values are shown in the 2D-graphics in annex 2. Test results relevant for the specified standard (see chapter 1.6.) are shown in table form in chapter 2.5.

- A Z-axis scan measures the total SAR value at the x-and y-position of the maximum SAR value found during the cube 7x7x7 scan. The probe is moved away in z-direction from the bottom of the SAM phantom in 2mm steps. This measurement shows the continuity of the liquid and can - depending in the field strength – also show the liquid depth. A z-axis scan of the measurement with maximum SAR value is shown in annex 2.

2.4.7 Spatial Peak SAR Evaluation

The spatial peak SAR - value for 1 and 10 g is evaluated after the Cube measurements have been done. The basis of the evaluation are the SAR values measured at the points of the fine cube grid consisting of 7 x 7 x 7 points. The algorithm that finds the maximal averaged volume is separated into three different stages.

- The data between the dipole center of the probe and the surface of the phantom are extrapolated. This data cannot be measured since the center of the dipole is 2.7 mm away from the tip of the probe and the distance between the surface and the lowest measuring point is about 1 mm (see probe calibration sheet). The extrapolated data from a cube measurement can be visualized by selecting 'Graph Evaluated'.

- The maximum interpolated value is searched with a straight-forward algorithm. Around this maximum the SAR - values averaged over the spatial volumes (1g or 10 g) are computed using the 3d-spline interpolation algorithm. If the volume cannot be evaluated (i.e., if a part of the grid was cut off by the boundary of the measurement area) the evaluation will be started on the corners of the bottom plane of the cube.

- All neighboring volumes are evaluated until no neighboring volume with a higher average value is found.

Extrapolation

The extrapolation is based on a least square algorithm [W. Gander, Computermathematik, p.168-180]. Through the points in the first 3 cm along the z-axis, polynomials of order four are calculated. These polynomials are then used to evaluate the points between the surface and the probe tip. The points, calculated from the surface, have a distance of 1 mm from each other.

Interpolation

The interpolation of the points is done with a 3d-Spline. The 3d-Spline is composed of three one-dimensional splines with the "Not a knot"-condition [W. Gander, Computermathematik, p.141-150] (x, y and z -direction) [Numerical Recipes in C, Second Edition, p.123ff].

Volume Averaging

At First the size of the cube is calculated. Then the volume is integrated with the trapezoidal algorithm. 8000 points (20x20x20) are interpolated to calculate the average.

Advanced Extrapolation

DASY4 uses the advanced extrapolation option which is able to compansate boundary effects on E-field probes.

2.4.8 Data Storage and Evaluation

Data Storage

The DASY4 software stores the acquired data from the data acquisition electronics as raw data (in microvolt readings from the probe sensors), together with all necessary software parameters for the data evaluation (probe calibration data, liquid parameters and device frequency and modulation data) in measurement files with the extension ".DA4". The software evaluates the desired unit and format for output each time the data is visualized or exported. This allows verification of the complete software setup even after the measurement and allows correction of incorrect parameter settings. For example, if a measurement has been performed with a wrong crest factor parameter in the device setup, the parameter can be corrected afterwards and the data can be re-evaluated.

The measured data can be visualized or exported in different units or formats, depending on the selected probe type ([V/m], [A/m], [°C], [mW/g], [mW/cm²], [dBrel], etc.). Some of these units are not available in certain situations or show meaningless results, e.g., a SAR output in a lossless media will always be zero. Raw data can also be exported to perform the evaluation with other software packages.

Data Evaluation by SEMCAD

The SEMCAD software automatically executes the following procedures to calculate the field units from the microvolt readings at the probe connector. The parameters used in the evaluation are stored in the configuration modules of the software:

Probe parameters:	- Sensitivity	$Norm_i$, a_{i0}, a_{i1}, a_{i2}
	- Conversion factor	$ConvF_i$
	- Diode compression point	Dcpi
Device parameters:	- Frequency	f
	- Crest factor	cf
Media parameters:	- Conductivity	σ
	- Density	ρ

These parameters must be set correctly in the software. They can be found in the component documents or they can be imported into the software from the configuration files issued for the DASY4 components. In the direct measuring mode of the multimeter option, the parameters of the actual system setup are used. In the scan visualization and export modes, the parameters stored in the corresponding document files are used.

The first step of the evaluation is a linearization of the filtered input signal to account for the compression characteristics of the detector diode. The compensation depends on the input signal, the diode type and the DC-transmission factor from the diode to the evaluation electronics.

If the exciting field is pulsed, the crest factor of the signal must be known to correctly compensate for peak power. The formula for each channel can be given as:

$$V_i = U_i + U_i^2 \cdot cf/dcp_i$$

with	V_i	= compensated signal of channel i	(i = x, y, z)
	U_i	= input signal of channel i	(i = x, y, z)
	cf	= crest factor of exciting field	(DASY parameter)
	dcp_i	= diode compression point	(DASY parameter)

From the compensated input signals the primary field data for each channel can be evaluated:

E-field probes: $E_i = (V_i / Norm_i \cdot ConvF)^{1/2}$

H-field probes: $H_i = (V_i)^{1/2} \cdot (a_{i0} + a_{i1}f + a_{i2}f^2)/f$

with	V_i	= compensated signal of channel i	(i = x, y, z)
	$Norm_i$	= sensor sensitivity of channel i [mV/(V/m)^2] for E-field Probes	(i = x, y, z)
	ConvF	= sensitivity enhancement in solution	
	a_{ij}	= sensor sensitivity factors for H-field probes	
	f	= carrier frequency [GHz]	
	E_i	= electric field strength of channel i in V/m	
	H_i	= magnetic field strength of channel i in A/m	

The RSS value of the field components gives the total field strength (Hermitian magnitude):

$$E_{tot} = (E_x^2 + E_Y^2 + E_z^2)^{1/2}$$

The primary field data are used to calculate the derived field units.

$$SAR = (E_{tot}^2 \cdot \sigma) / (\rho \cdot 1000)$$

with	SAR	= local specific absorption rate in mW/g
	E_{tot}	= total field strength in V/m
	σ	= conductivity in [mho/m] or [Siemens/m]
	ρ	= equivalent tissue density in g/cm^3

Note that the density is normally set to 1 (or 1.06), to account for actual brain density rather than the density of the simulation liquid.The power flow density is calculated assuming the excitation field to be a free space field.

$P_{pwe} = E_{tot}^2 / 3770$ or $P_{pwe} = H_{tot}^2 \cdot 37.7$

with	P_{pwe}	= equivalent power density of a plane wave in mW/cm^2
	E_{tot}	= total electric field strength in V/m
	H_{tot}	= total magnetic field strength in A/m

2.4.9 Test equipment utilized

This table gives a complete overview of the SAR measurement equipment

Devices used during the test described in chapter 2.5. are marked ☒

	Manufacturer	Device	Type	Serial number	Date of last calibration)*
☒	Schmid & Partner Engineering AG	Dosimetric E-Field Probe	ET3DV6	1558	September 6, 2005
☐	Schmid & Partner Engineering AG	Dosimetric E-Field Probe	ET3DV6	1559	June 10, 2005
☐	Schmid & Partner Engineering AG	900 MHz System Validation Dipole	D900V2	102	August 31, 2005
☐	Schmid & Partner Engineering AG	1800 MHz System Validation Dipole	D1800V2	287	September 1, 2005
☒	Schmid & Partner Engineering AG	1900 MHz System Validation Dipole	D1900V2	5d009	August 30, 2005
☐	Schmid & Partner Engineering AG	2450 MHz System Validation Dipole	D2450V2	710	August 23, 2005
☒	Schmid & Partner Engineering AG	Data acquisition electronics	DAE3V1	413	January 12, 2006
☒	Schmid & Partner Engineering AG	Software	DASY 4 V4.5	---	N/A
☒	Schmid & Partner Engineering AG	Phantom	SAM	---	N/A
☐	Rohde & Schwarz	Universal Radio Communication Tester	CMU 200	832221/0055	January 12, 2006
☐	Agilent	Network Analyser 300 kHz to 3 GHz	8753C	2936A00872	July 15, 2004
☐	Agilent	Dielectric Probe Kit	85070C	US99360146	N/A
☐	Agilent	Peak Power Analyzer	8990A	3128A00169	August 23, 2005
☐	Agilent	Peak Power Sensor	84813A	3125A00111	August 25, 2005
☒	Agilent	Signal Generator	8665A	2833A00112	November 08, 2005
☒	Amplifier Reasearch	Amplifier	25S1G4 (25 Watt)	20452	N/A
☒	Agilent	Power Meter	438A	2804U01006	February 4, 2006
☒	Agilent	Power Meter Sensor	8482A	2703A03025	February 4, 2006

)* : Network analyzer probe calibration against air, distilled water and a 50 Ohm resistor performed before measuring liquid parameters.

2.4.10 Tissue simulating liquids: dielectric properties

The following materials are used for producing the tissue-equivalent materials

(liquids used for tests described in chapter 2.5. are marked with ☒) :

Ingredients (% of weight)	**Frequency (MHz)**					
frequency band	☐ 450	☐ 835	☐ 900	☐ 1800	☒ 1900	☐ 2450
Tissue Type	Body	Body	Body	Body	Body	Body
Water	51.16	52.4	56.0	69.91	69.91	73.2
Salt (NaCl)	1.49	1.40	0.76	0.13	0.13	0.04
Sugar	46.78	45.0	41.76	0.0	0.0	0.0
HEC	0.52	1.0	1.21	0.0	0.0	0.0
Bactericide	0.05	0.1	0.27	0.0	0.0	0.0
Triton X-100	0.0	0.0	0.0	0.0	0.0	0.0
DGBE	0.0	0.0	0.0	29.96	29.96	26.7

Table 2: Body tissue dielectric properties

Salt: 99+% Pure Sodium Chloride
Sugar: 98+% Pure Sucrose
Water: De-ionized, 16MΩ+ resistivity
HEC: Hydroxyethyl Cellulose
DGBE: 99+% Di(ethylene glycol) butyl ether, [2-(2-butoxyethoxy)ethanol]
Triton X-100(ultra pure): Polyethylene glycol mono [4-(1,1,3,3-tetramethylbutyl)phenyl]ether

2.4.11 Tissue simulating liquids: parameters

Used Target Frequency	**Target Body Tissue**		**Measured Body Tissue**		**Measured Date**
[MHz]	Permittivity	Conductivity [S/m]	Permittivity	Conductivity [S/m]	
1900	53.3	1.52	52.7	1.56	2006-01-31

Table 3: Parameter of the body tissue simulating liquid

Note: The dielectric properties have been measured using the contact probe method at 21°C.

2.4.12 Measurement uncertainty evaluation for SAR test

The overall combined measurement uncertainty of the measurement system is ± 10,3% (K=1).
The expanded uncertainty (k=2) is assessed to be ± 20.6%
This measurement uncertainty budget is suggested by IEEE P1528 and determined by Schmid & Partner Engineering AG. The breakdown of the individual uncertainties is as follows:

Error Sources	Uncertainty Value	Probability Distribution	Divi-sor	c_i 1g	c_i 10g	Standard Uncertainty 1g	Standard Uncertainty 10g	v_i^2 or v_{eff}
Measurement System								
Probe calibration	± 4.8%	Normal	1	1	1	± 4.8%	± 4.8%	∞
Axial isotropy	± 4.7%	Rectangular	√3	0.7	0.7	± 1.9%	± 1.9%	∞
Hemispherical isotropy	± 9.6%	Rectangular	√3	0.7	0.7	± 3.9%	± 3.9%	∞
Spatial resolution	± 0.0%	Rectangular	√3	1	1	± 0.0%	± 0.0%	∞
Boundary effects	± 1.0%	Rectangular	√3	1	1	± 0.6%	± 0.6%	∞
Probe linearity	± 4.7%	Rectangular	√3	1	1	± 2.7%	± 2.7%	∞
System detection limits	± 1.0%	Rectangular	√3	1	1	± 0.6%	± 0.6%	∞
Readout electronics	± 1.0%	Normal	1	1	1	± 1.0%	± 1.0%	∞
Response time	± 0.8%	Rectangular	√3	1	1	± 0.5%	± 0.5%	∞
Integration time	± 2.6%	Rectangular	√3	1	1	± 1.5%	± 1.5%	∞
RF ambient conditions	± 3.0%	Rectangular	√3	1	1	± 1.7%	± 1.7%	∞
Probe positioner	± 0.4%	Rectangular	√3	1	1	± 0.2%	± 0.2%	∞
Probe positioning	± 2.9%	Rectangular	√3	1	1	± 1.7%	± 1.7%	∞
Max. SAR evaluation	± 1.0%	Rectangular	√3	1	1	± 0.6%	± 0.6%	∞
Test Sample Related								
Device positioning	± 2.9%	Normal	1	1	1	± 2.9%	± 2.9%	145
Device holder uncertainty	± 3.6%	Normal	1	1	1	± 3.6%	± 3.6%	5
Power drift	± 5.0%	Rectangular	√3	1	1	± 2.9%	± 2.9%	∞
Phantom and Set-up								
Phantom uncertainty	± 4.0%	Rectangular	√3	1	1	± 2.3%	± 2.3%	∞
Liquid conductivity (target)	± 5.0%	Rectangular	√3	0.64	0.43	± 1.8%	± 1.2%	∞
Liquid conductivity (meas.)	± 2.5%	Normal	1	0.64	0.43	± 1.6%	± 1.1%	∞
Liquid permittivity (target)	± 5.0%	Rectangular	√3	0.6	0.49	± 1.7%	± 1.4%	∞
Liquid permittivity (meas.)	± 2.5%	Normal	1	0.6	0.49	± 1.5%	± 1.2%	∞
Combined Uncertainty						± 10.3%	± 10.0%	330
Expanded Std. Uncertainty						**± 20.6%**	**± 20.1%**	

Table 4: Measurement uncertainties

2.4.13 Measurement uncertainty evaluation for system validation

The overall combined measurement uncertainty of the measurement system is ± 8.4% (K=1).
The expanded uncertainty (k=2) is assessed to be ± 16.8%
This measurement uncertainty budget is suggested by IEEE P1528 and determined by Schmid & Partner Engineering AG. The breakdown of the individual uncertainties is as follows:

Error Sources	Uncertainty Value	Probability Distribution	Divi-sor	c_i 1g	c_i 10g	Standard Uncertainty 1g	Standard Uncertainty 10g	v_i^2 or v_{eff}
Measurement System								
Probe calibration	± 4.8%	Normal	1	1	1	± 4.8%	± 4.8%	∞
Axial isotropy	± 4.7%	Rectangular	√3	0.7	0.7	± 1.9%	± 1.9%	∞
Hemispherical isotropy	± 0.0%	Rectangular	√3	0.7	0.7	± 0.0%	± 3.9%	∞
Boundary effects	± 1.0%	Rectangular	√3	1	1	± 0.6%	± 0.6%	∞
Probe linearity	± 4.7%	Rectangular	√3	1	1	± 2.7%	± 2.7%	∞
System detection limits	± 1.0%	Rectangular	√3	1	1	± 0.6%	± 0.6%	∞
Readout electronics	± 1.0%	Normal	1	1	1	± 1.0%	± 1.0%	∞
Response time	± 0.0%	Rectangular	√3	1	1	± 0.0%	± 0.0%	∞
Integration time	± 0.0%	Rectangular	√3	1	1	± 0.0%	± 0.0%	∞
RF ambient conditions	± 3.0%	Rectangular	√3	1	1	± 1.7%	± 1.7%	∞
Probe positioner	± 0.4%	Rectangular	√3	1	1	± 0.2%	± 0.2%	∞
Probe positioning	± 2.9%	Rectangular	√3	1	1	± 1.7%	± 1.7%	∞
Max. SAR evaluation	± 1.0%	Rectangular	√3	1	1	± 0.6%	± 0.6%	∞
Test Sample Related								
Dipole axis to liquid distance	± 2.0%	Normal	1	1	1	± 1.2%	± 1.2%	∞
Power drift	± 4.7%	Rectangular	√3	1	1	± 2.7%	± 2.7%	∞
Phantom and Set-up								
Phantom uncertainty	± 4.0%	Rectangular	√3	1	1	± 2.3%	± 2.3%	∞
Liquid conductivity (target)	± 5.0%	Rectangular	√3	0.64	0.43	± 1.8%	± 1.2%	∞
Liquid conductivity (meas.)	± 2.5%	Normal	1	0.64	0.43	± 1.6%	± 1.1%	∞
Liquid permittivity (target)	± 5.0%	Rectangular	√3	0.6	0.49	± 1.7%	± 1.4%	∞
Liquid permittivity (meas.)	± 2.5%	Normal	1	0.6	0.49	± 1.5%	± 1.2%	∞
Combined Uncertainty						**± 8.4%**	**± 8.1%**	
Expanded Std. Uncertainty						**± 16.8%**	**± 16.2%**	

Table 5: Measurement uncertainties

2.4.14 System validation

The system validation is performed for verifying the accuracy of the complete measurement system and performance of the software. The system validation is performed with tissue equivalent material according to IEEE P1528 (described above). The following table shows validation results for all frequency bands and tissue liquids used during the tests of the test item described in chapter 1.5.
(graphic plot(s) see annex 1).

Validation Kit	Frequency	Target Peak SAR (1000 mW) (+/- 10%)	Target SAR_{1g} (1000 mW) (+/- 10%)	Measured Peak SAR	Measured SAR_{1g}	Measured date
D1900V2 S/N: 5d009	**1900 MHz body**	**66.4 mW/g**	**38.5 mW/g**	**70.0 mW/g**	**40.4 mW/g**	**2006-01-31**

Table 6: Results system validation

2.4.15 Validation procedure

The validation is performed by using a validation dipole which is positioned parallel to the planar part of the SAM phantom at the reference point. The distance of the dipole to the SAM phantom is determined by a plexiglass spacer. The dipole is connected to the signal source consisting of signal generator and amplifier via a directional coupler, N-connector cable and adaption to SMA. It is fed with a power of 1000 mW. To adjust this power a power meter is used. The power sensor is connected to the cable before the validation to measure the power at this point and do adjustments at the signal generator. At the outputs of the directional coupler both return loss as well as forward power are controlled during the validation to make sure that emitted power at the dipole is kept constant. This can also be checked by the power drift measurement after the test (result on plot).
Validation results have to be equal or near the values determined during dipole calibration (target SAR in table above) with the relevant liquids and test system.

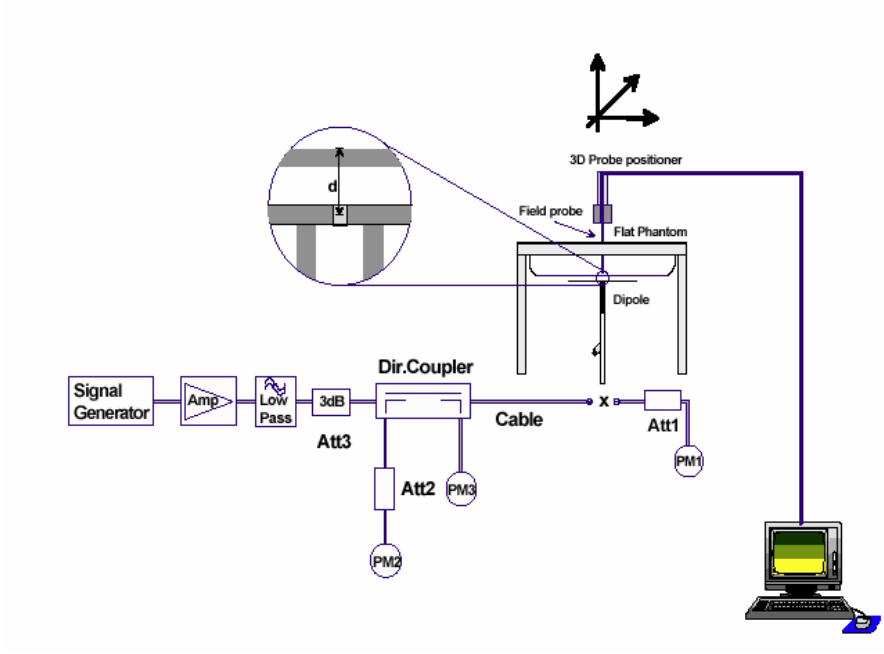

2.5 Test results (Body SAR)

The table contains the measured SAR values averaged over a mass of 1 g				
Channel / frequency	Position	Body worn	Limit	Liquid temperature
3/1925 MHz	rear horizontal (0 mm distance)	**0.159** W/kg	1.6 W/kg	20.0 °C
3/1925 MHz	rear vertical (5 mm distance)	0.030 W/kg	1.6 W/kg	20.0 °C
3/1925 MHz	side (10 mm distance)	0.034 W/kg	1.6 W/kg	20.0 °C
1/1925 MHz	rear	not necessary	1.6 W/kg	----
5/1925 MHz	rear	not necessary	1.6 W/kg	----

Table 7: Test results (Body SAR UPCS 1900 MHz)

Note: The SAR test shall be performed at the high, middle and low frequency channels of each operating mode. If the SAR measured at mid-band channel for each test configuration is at least 3.0 dB lower than the SAR limit (< 0.8 W/kg), testing at the high and low channels is optional.
Tests in body position were performed any distance between Laptops and SAM.

2.6 Test results (conducted power measurement)

For the measurements a Rohde & Schwarz Radio Communication Tester CMU 200 was used.
The output power was measured using an integrated RF connector and attached RF cable.
The conducted output power was measured before and after each SAR measurement. The resulting power values were within a 0.2 dB tolerance of the values shown below.

UPCS 1900	
Channel	peak power
3	19.6 dBm

Table 8: Test results conducted peak power measurement

Annex 1 System performance verification

Date/Time: 2006-01-31 09:27:24Date/Time: 2006-01-31 09:31:26

SystemPerformanceCheck-D1900 body 2006-01-31

DUT: Dipole 1900 MHz; Type: D1900V2; Serial: D1900V2 - SN: 5d009
Communication System: CW; Frequency: 1900 MHz; Duty Cycle: 1:1
Medium: M1900 Medium parameters used (interpolated): f = 1900 MHz; σ = 1.56 mho/m; ε_r = 52.7; ρ = 1000 kg/m^3
Phantom section: Flat Section
DASY4 Configuration:
- Probe: ET3DV6 - SN1558; ConvF(4.27, 4.27, 4.27); Calibrated: 2005-09-06
- Sensor-Surface: 4mm (Mechanical Surface Detection)
- Electronics: DAE3 Sn413; Calibrated: 2006-01-12
- Phantom: SAM 12; Type: SAM; Serial: 1043
- Measurement SW: DASY4, V4.5 Build 19; Postprocessing SW: SEMCAD, V1.8 Build 146

d=10mm, Pin=1000mW/Area Scan (51x61x1): Measurement grid: dx=15mm, dy=15mm
Maximum value of SAR (interpolated) = 50.7 mW/g

d=10mm, Pin=1000mW/Zoom Scan (7x7x7) (7x7x7)/Cube 0: Measurement grid: dx=5mm, dy=5mm, dz=5mm
Reference Value = 174.0 V/m; Power Drift = 0.01 dB
Peak SAR (extrapolated) = 70.0 W/kg
SAR(1 g) = 40.4 mW/g; SAR(10 g) = 21.4 mW/g
Maximum value of SAR (measured) = 45.2 mW/g

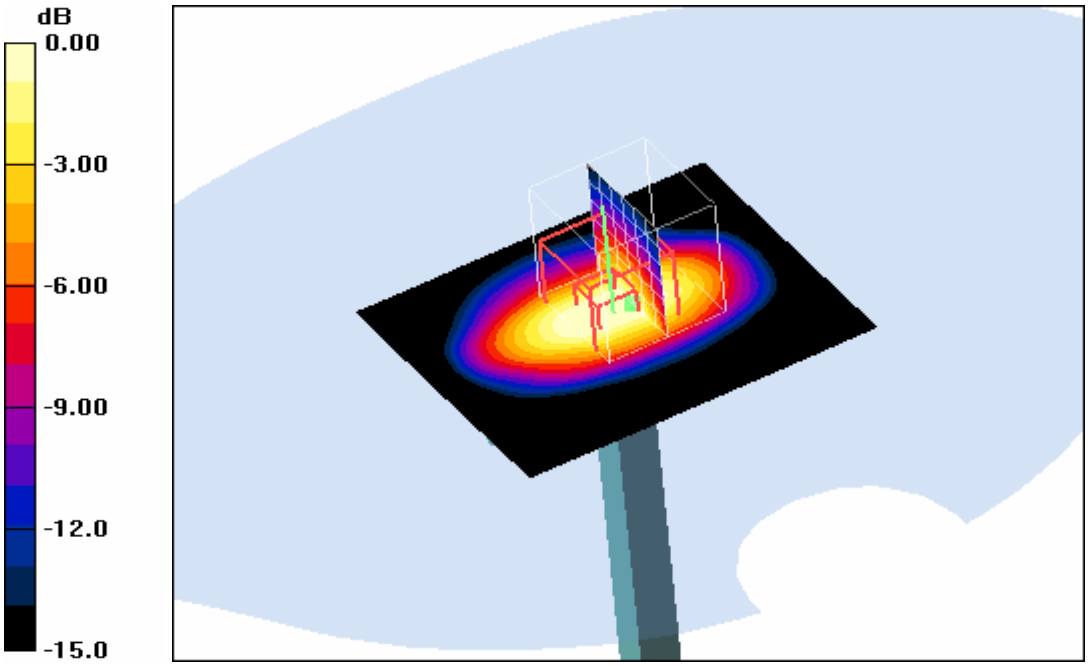

0 dB = 45.2mW/g

Additional information:
position or distance of DUT to SAM (if not standard head positions) :
ambient temperature: 22.5°C; liquid temperature: 20.8°C

Annex 2 Measurement results (printout from DASY ™)

Remark: results of conducted power measurements: see chapter 2.5/2.6 (if applicable)

Date/Time: 2006-01-31 14:47:05Date/Time: 2006-01-31 14:58:29

P1528_OET65-Body-DECT USA

DUT: Siemens; Type: Gigaset M34; Serial: n.a.
Communication System: DECT USA; Frequency: 1925 MHz;Duty Cycle: 1:24
Medium: M1900 Medium parameters used (extrapolated): f = 1925 MHz; σ = 1.56 mho/m; ε_r = 52.7; ρ = 1000 kg/m^3
Phantom section: Flat Section
DASY4 Configuration:
- Probe: ET3DV6 - SN1558; ConvF(4.27, 4.27, 4.27); Calibrated: 2005-09-06
- Sensor-Surface: 4mm (Mechanical Surface Detection)
- Electronics: DAE3 Sn413; Calibrated: 2006-01-12
- Phantom: SAM 12; Type: SAM; Serial: 1043
- Measurement SW: DASY4, V4.5 Build 19; Postprocessing SW: SEMCAD, V1.8 Build 146

Rear position - Middle/Area Scan (81x121x1): Measurement grid: dx=15mm, dy=15mm
Maximum value of SAR (interpolated) = 0.172 mW/g

Rear position - Middle/Zoom Scan (7x7x7) (7x7x7)/Cube 0: Measurement grid: dx=5mm, dy=5mm, dz=5mm
Reference Value = 2.17 V/m; Power Drift = 0.198dB
Peak SAR (extrapolated) = 0.323 W/kg
SAR(1 g) = 0.159 mW/g; SAR(10 g) = 0.076 mW/g
Maximum value of SAR (measured) = 0.178 mW/g

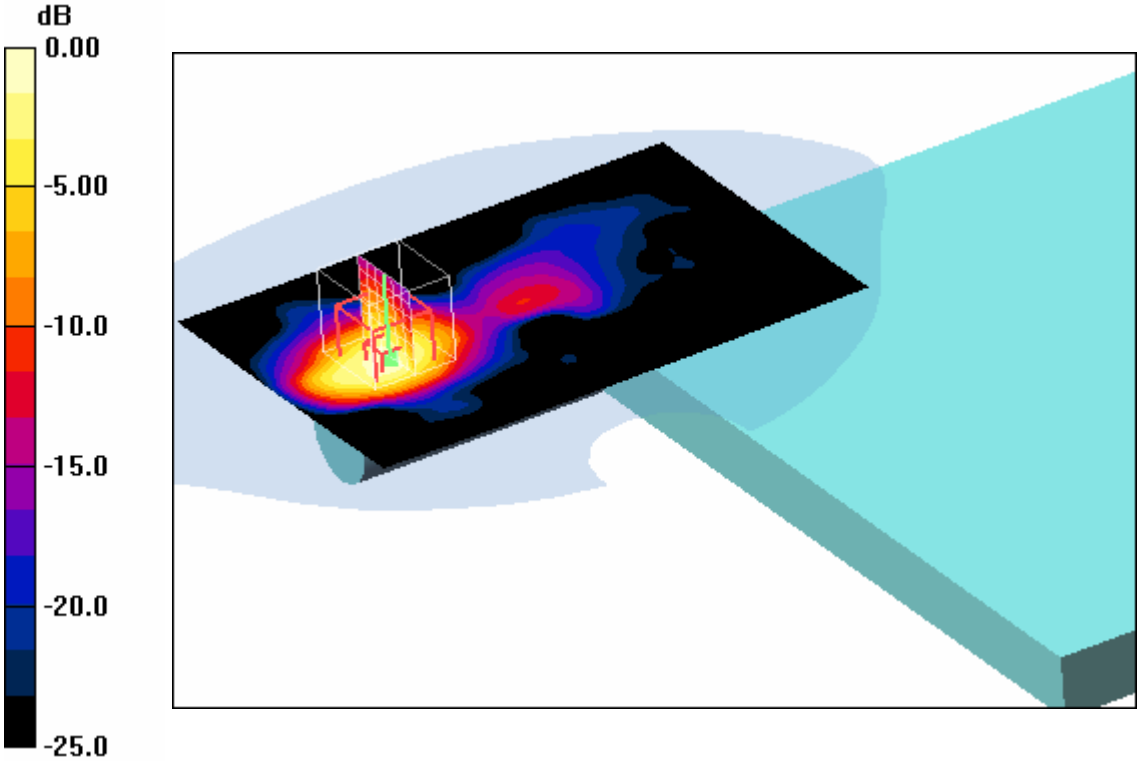

0 dB = 0.178mW/g

Additional information:
position or distance of DUT to SAM (if not standard head positions) : touched
ambient temperature: 23.4°C; liquid temperature: 20.0°C

Date/Time: 2006-01-31 15:33:49Date/Time: 2006-01-31 15:46:31

P1528_OET65-Body-DECT USA

DUT: Siemens; Type: Gigaset M34; Serial: n.a.
Communication System: DECT USA; Frequency: 1925 MHz; Duty Cycle: 1:24
Medium: M1900 Medium parameters used (extrapolated): f = 1925 MHz; σ = 1.56 mho/m; ε_r = 52.7; ρ = 1000 kg/m^3
Phantom section: Flat Section
DASY4 Configuration:
- Probe: ET3DV6 - SN1558; ConvF(4.27, 4.27, 4.27); Calibrated: 2005-09-06
- Sensor-Surface: 4mm (Mechanical Surface Detection)
- Electronics: DAE3 Sn413; Calibrated: 2006-01-12
- Phantom: SAM 12; Type: SAM; Serial: 1043
- Measurement SW: DASY4, V4.5 Build 19; Postprocessing SW: SEMCAD, V1.8 Build 146

Rear position 2 - Middle /Area Scan (81x131x1): Measurement grid: dx=15mm, dy=15mm

Maximum value of SAR (interpolated) = 0.035 mW/g

Rear position 2 - Middle /Zoom Scan (7x7x7) (7x7x7)/Cube 0: Measurement grid: dx=5mm, dy=5mm, dz=5mm

Reference Value = 2.82 V/m; Power Drift = 0.055 dB
Peak SAR (extrapolated) = 0.046 W/kg
SAR(1 g) = 0.030 mW/g; SAR(10 g) = 0.019 mW/g
Maximum value of SAR (measured) = 0.033 mW/g

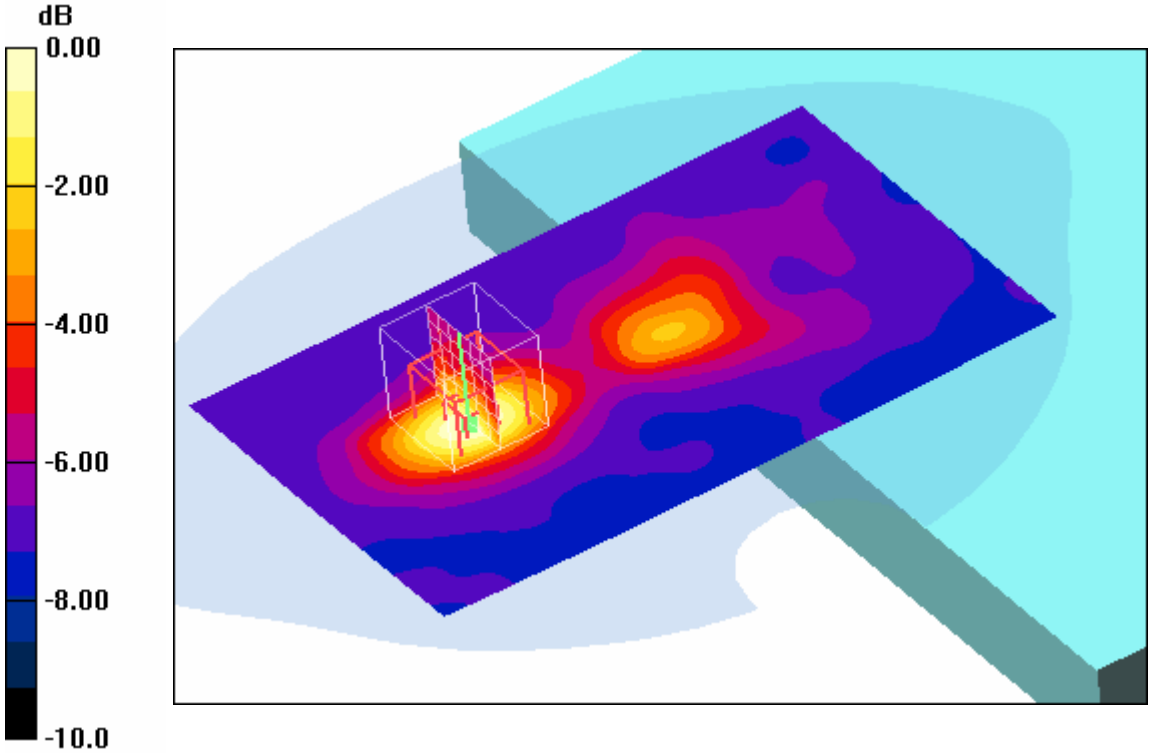

0 dB = 0.033mW/g

Additional information:
position or distance of DUT to SAM (if not standard head positions) : 5 mm
ambient temperature: 23.5°C; liquid temperature: 20.0°C

Date/Time: 2006-01-31 16:44:13Date/Time: 2006-01-31 16:56:49

P1528_OET65-Body-DECT USA

DUT: Siemens; Type: Gigaset M34; Serial: n.a.
Communication System: DECT USA; Frequency: 1925 MHz; Duty Cycle: 1:24
Medium: M1900 Medium parameters used (extrapolated): f = 1925 MHz; σ = 1.56 mho/m; ε_r = 52.7; ρ = 1000 kg/m^3
Phantom section: Flat Section
DASY4 Configuration:
- Probe: ET3DV6 - SN1558; ConvF(4.27, 4.27, 4.27); Calibrated: 2005-09-06
- Sensor-Surface: 4mm (Mechanical Surface Detection)
- Electronics: DAE3 Sn413; Calibrated: 2006-01-12
- Phantom: SAM 12; Type: SAM; Serial: 1043
- Measurement SW: DASY4, V4.5 Build 19; Postprocessing SW: SEMCAD, V1.8 Build 146

Side position - Middle 3/Area Scan (81x131x1): Measurement grid: dx=15mm, dy=15mm
Maximum value of SAR (interpolated) = 0.037 mW/g

Side position - Middle 3/Zoom Scan (7x7x7) (7x7x7)/Cube 0: Measurement grid: dx=5mm, dy=5mm, dz=5mm
Reference Value = 3.02 V/m; Power Drift = 0.035 dB
Peak SAR (extrapolated) = 0.054 W/kg
SAR(1 g) = 0.034 mW/g; SAR(10 g) = 0.020 mW/g
Maximum value of SAR (measured) = 0.037 mW/g

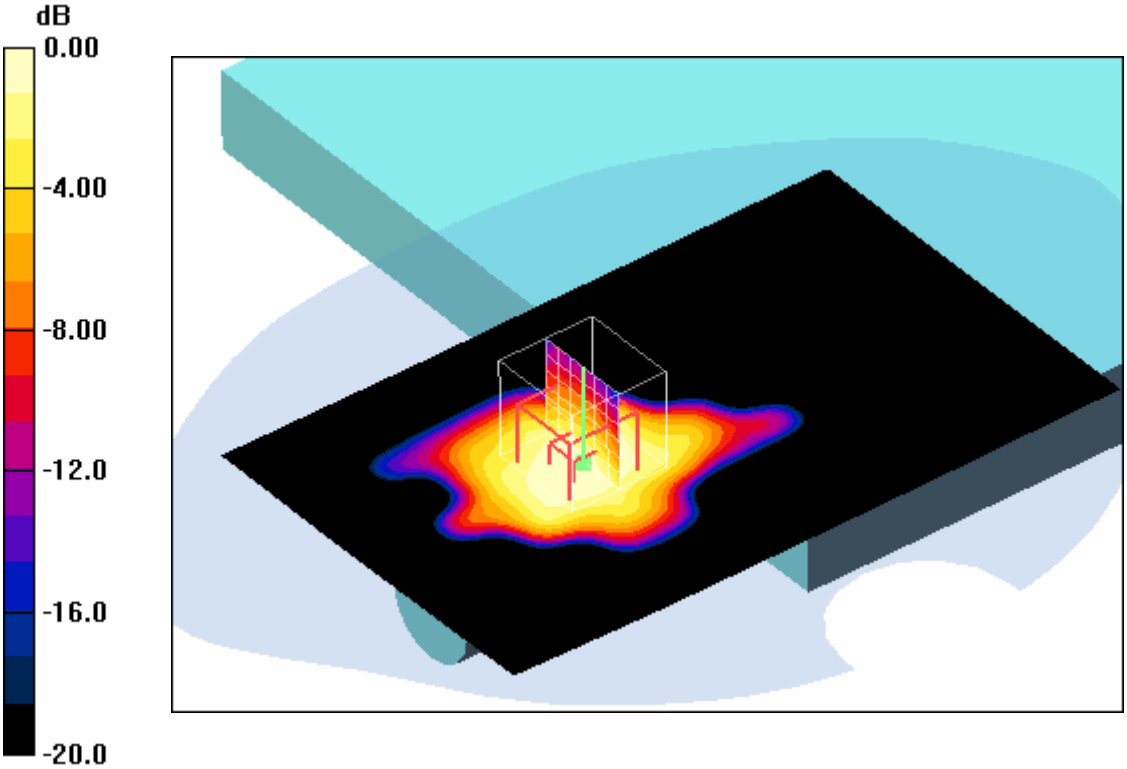

0 dB = 0.037mW/g

Additional information:
position or distance of DUT to SAM (if not standard head positions) : 10 mm
ambient temperature: 23.6°C; liquid temperature: 20.0°C

Annex 2.1 Z-axis scan

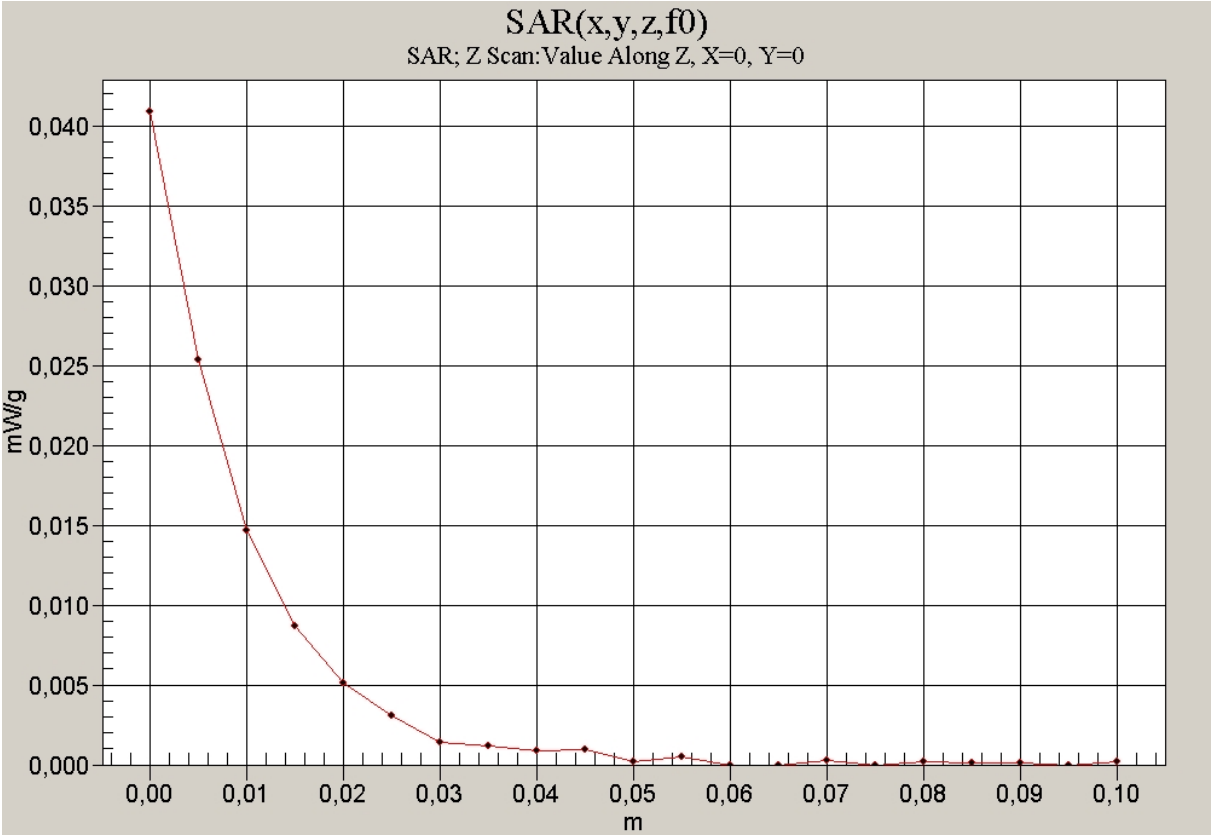

1900 MHz body

Annex 3 Photo documentation

Picture no. 1

Measurement System DASY 4

Picture no. 2

DUT - front view

Picture no. 3

DUT - rear view

Picture no. 4

DUT - top view

Picture no. 5

DUT - underside view

Picture no. 6

1st Laptop with DUT - front view

Picture no. 7

1st Laptop with DUT - top view

Picture no. 8

1st Laptop with DUT - rear view

Picture no. 9

1st Laptop with DUT - rear view

Picture no. 10

1st Laptop with DUT - underside view

Picture no. 11

1st Laptop - underside view

Picture no. 12

1st Laptop - label

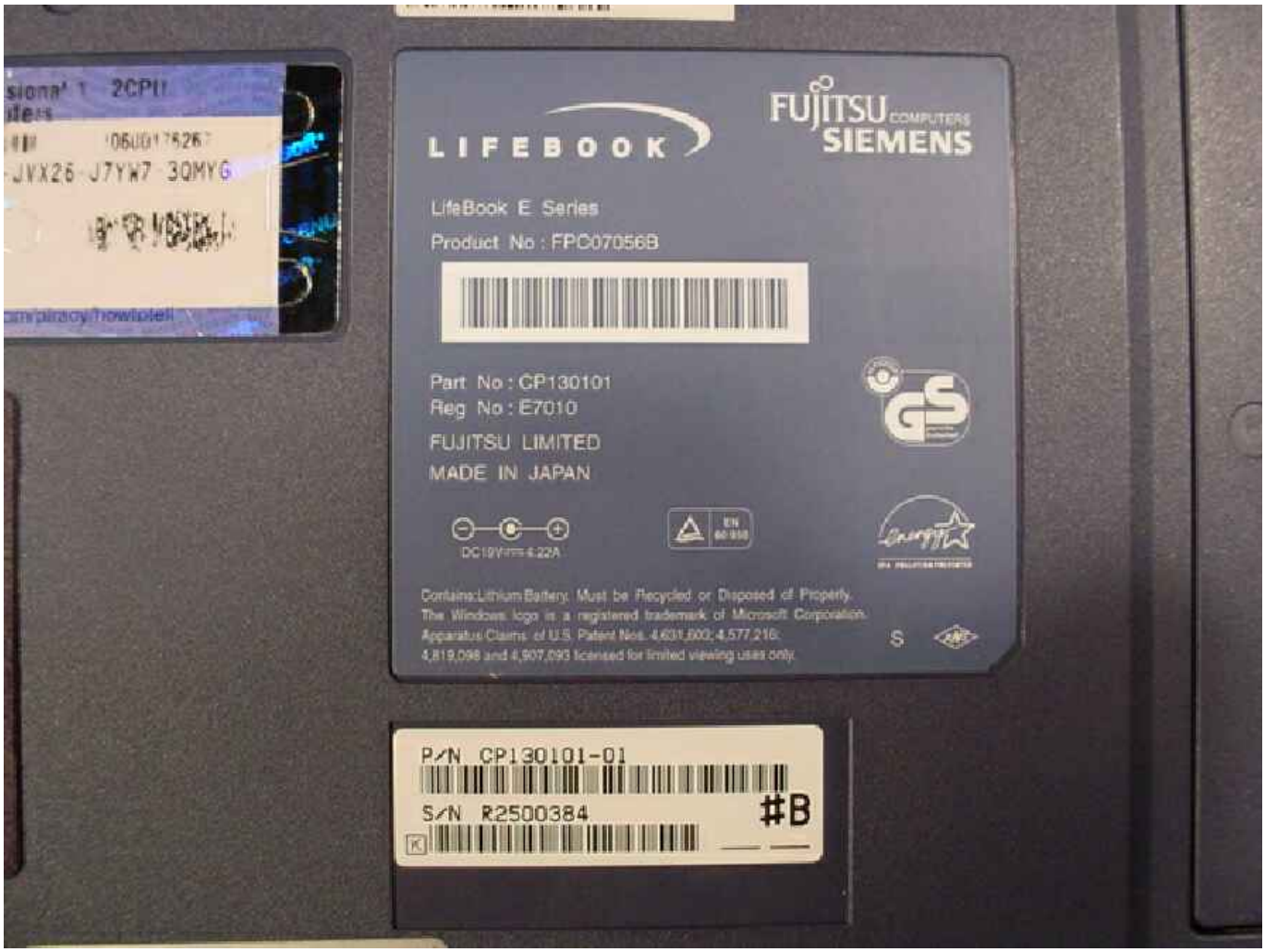

Picture no. 13

2nd Laptop with DUT - front view

Picture no. 14

2nd Laptop with DUT - top view

Picture no. 15

2nd Laptop with DUT - underside view

Picture no. 16

2nd Laptop - underside view

Picture no. 17

2nd Laptop - label

Picture no. 18

2nd Laptop with DUT - rear view

Picture no. 19

3rd Laptop with DUT - front view

Picture no. 20

3rd Laptop with DUT - top view

Picture no. 21

3rd Laptop with DUT - left side view

Picture no. 22

3rd Laptop with DUT - left side view

Picture no. 23

3rd Laptop with DUT - underside view

Picture no. 24

3rd Laptop - label

Picture no. 25

Test position body worn rear side touched with 1st Laptop

Picture no. 26

Test position body worn rear side touched with 1st Laptop

Picture no. 27

Test position body worn rear side touched with 1st Laptop

Picture no. 28

Test position body worn rear side (distance 5 mm) with 2nd Laptop

Picture no. 29

Test position body worn rear side (distance 5 mm) with 2nd Laptop

Picture no. 30

Test position body worn rear side (distance 5 mm) with 2nd Laptop

Picture no. 31

Test position body worn rear side (distance 10 mm) with 3rd Laptop

Picture no. 32

Test position body worn rear side (distance 10 mm) with 3rd Laptop

Picture no. 33

Test position body worn rear side (distance 10 mm) with 3rd Laptop

Annex 4 RF Technical Brief Cover Sheet acc. to RSS-102

1. COMPANY NUMBER: 267U

2. MODEL NUMBER: M34USB

3. MANUFACTURER: Siemens Home and Office Communication

4. TYPE OF EVALUATION:

(a) SAR Evaluation: Device used in the Vicinity of the Human Head : N/A

(b) SAR Evaluation: Body-worn Device

- **Multiple transmitters: Yes ☐ No ☒**
- **Evaluated against exposure limits: General Public Use ☒ Controlled Use ☐**
- **Duty cycle used in evaluation: 4 %**
- **Standard used for evaluation: RSS-102 Issue 2 (2005-11)**
- **SAR value: 0.159 W/kg. Measured ☒ Computed ☐ Calculated ☐**

Annex 4.1 Declaration of RF Exposure Compliance

ATTESTATION: I attest that the information provided in Annex 4 is correct; that a Technical Brief was prepared and the information it contains is correct; that the device evaluation was performed or supervised by me; that applicable measurement methods and evaluation methodologies have been followed and that the device meets the SAR and/or RF exposure limits of RSS-102.

Signature: Thomas Vogler **Date: 2006-02-06**

NAME : Thomas Vogler

TITLE : Dipl.-Ing. (FH)

COMPANY : CETECOM ICT Services GmbH

Annex 5 Calibration parameters

Calibration parameters are described in the additional document :

Appendix to test report report no. 2-4203-01-03/05‘
Calibration data, Phantom certificate
and detail information of the DASY4 System