Regulatory, Safety and Environmental Notices

User Guide

© Copyright 2014 Hewlett-Packard Development Company, L.P.

Bluetooth is a trademark owned by its proprietor and used by Hewlett-Packard Company under license. ENERGY STAR and the ENERGY STAR mark are registered trademarks owned by the U.S. Environmental Protection Agency. Java is a trademark of Sun Microsystems. Microsoft and Windows are U.S. registered trademarks of the Microsoft group of companies.

The information contained herein is subject to change without notice. The only warranties for HP products and services are set forth in the express warranty statements accompanying such products and services. Nothing herein should be construed as constituting an additional warranty. HP shall not be liable for technical or editorial errors or omissions contained herein.

Second Edition: October 2014

First Edition: June 2014

Document Part Number: 786097-002

About This Guide

This guide provides regulatory, safety and environmental information that is compliant with U.S., Canadian, and international regulations for notebook computers, desktops, thin clients and personal workstations.

WARNING! Text set off in this manner indicates that failure to follow directions could result in bodily harm or loss of life.

CAUTION: Text set off in this manner indicates that failure to follow directions could result in damage to equipment or loss of information.

NOTE: Text set off in this manner provides important supplemental information.

Table of contents

1 Regulatory notices for notebook computers 1

Accessing regulatory labels 1

Federal Communications Commission notice 2

Modifications 2

Cables 2

Declaration of Conformity for products marked with the FCC logo (United States only) 3

Products with wireless LAN devices or HP Mobile Broadband Modules 3

Brazil notice 3

Canada notices 4

European Union regulatory notices 4

Declaration of Conformity 4

Products with wireless functionality (EMF) 5

Restrictions for product with wireless functionality 5

European telephone network declaration (Modem/Fax) 5

Ergonomics notice 5

Germany (English text) 5

Germany (Deutscher text) 5

Australia and New Zealand notice 6

Japan notice 6

Wireless LAN, Wireless WAN, and Bluetooth certification markings 6

South Korea notices 6

Mexico notice 6

Singapore wireless notice 7

Thailand WWAN wireless notice 7

Taiwan NCC notices 7

Wireless LAN 802.11a devices 7

Wireless LAN 802.11 devices/Bluetooth devices/Short range devices 8

Airline travel notice 8

User-replaceable battery notices 8

Factory-sealed battery notices 8

Laser compliance 9

Modem notices 9

Telecommunications device approvals 9

U.S. modem statements 10

U.S. modem declarations 11

Canada modem statements 12

Japan modem statements 12
New Zealand modem statements 12
Voice support 13
Power cord notice 13
Japan power cord notice 13
DC plug of external HP power supply 13
Macrovision Corporation notice 13

2 Regulatory notices for desktops, thin clients and personal workstations 14
Modem notices 14
Telecommunications device approvals 14
U.S. modem statements 14
Canadian modem statements 15
Japanese modem statements 15
New Zealand modem statements 16
Voice support 16
Electromagnetic compatibility notices 16
Federal Communications Commission notice 17
Modifications 17
Cables 17
Declaration of conformity for products marked with the FCC logo (United States only) 17
Products with wireless LAN devices 17
Australia telecom statement 18
Brazil notice 19
Canadian notice 19
European Union regulatory notices 19
Declaration of Conformity 19
Products with wireless functionality (EMF) 19
Restrictions for product with wireless functionality 20
European telephone network declaration (Modem/Fax) 20
Ergonomics notice 20
Japan notice 20
Wireless LAN and Bluetooth certification markings 20
South Korea notices 20
Mexico notice 21
Taiwan NCC notices 21
Wireless LAN 802.11a devices 21
Wireless LAN 802.11 devices/Bluetooth devices/Short range devices 22

3 Safety notices for notebook computers 23
Heat-related safety warning notice 23
Potential safety conditions notice 23
User-replaceable battery notices 23
Headset and earphone volume level notice 24
Power cord notices 24
Brazil notice 24
Cleaning the keyboard 24
Travel notice 24
China safety notices 25
China: Altitude notice 25
China: Tropical warning notice 25
Norway and Sweden: Cable grounding notice for products with a TV tuner 25
Taiwan BSMI notice 25

4 Safety notices for desktops, thin clients and personal workstations 26
Important safety information 26
Installation conditions 26
Battery replacement notice 27
Headset and earphone volume level notice 27
Laser safety 28
Power supply and power cord set requirements 28
Power supply class I grounding requirements 28
Brazil notice 28
Denmark 28
Finland 28
Norway 28
Sweden 28
Power supply requirements 28
For use in Norway 29
Power cord set requirements 29
Japan power cord requirements 29
Pinch hazard 29
TV antenna connectors protection 30
External television antenna grounding 30
Lightning protection 30
Note to CATV system installer 30
China safety notices 31
China: Altitude notice 31
China: Tropical warning notice 31
Germany acoustics notice 32

Taiwan BSMI notice 32

5 Environmental notices for notebook computers 33

Electronic hardware, packaging and battery recycling 33
Disposal of waste equipment by users 33
Brazil alkaline battery disposal 33
Brazil hardware recycling information 34
ENERGY STAR® Certification (select models only) 34
Chemical substances 35
China environmental notices 35
China PC energy label 35
China restriction of hazardous substances (RoHS) 38
India restriction of hazardous substances (RoHS) 41
Japan restriction of hazardous substances (RoHS) 41
Mexico Sustainable Energy Use Law 41
Turkey EEE regulation 41
Ukraine restriction of hazardous substances (RoHS) 41
Perchlorate material—special handling may apply 41

6 Environmental notices for desktops, thin clients and personal workstations 42

Electronic hardware, packaging and battery recycling 42
Disposal of waste equipment by users 42
Brazil alkaline battery disposal 42
Brazil hardware recycling information 43
ENERGY STAR® Certification (select models only) 43
Chemical substances 44
Mercury statement 44
Perchlorate material–special handling may apply 44
China environmental notices 44
China PC energy label 45
China restriction of hazardous substances (RoHS) 48
The Table of Hazardous Substances/Elements and their Content 49
India restriction of hazardous substances (RoHS) 50
IT ECO declarations 50
Japan restriction of hazardous substances (RoHS) 50
Ley para el Aprovechamiento Sustentable de la Energía de México (Mexico Sustainable Energy Use Law) 50
Turkey EEE regulation 51
Україна обмеження на наявність небезпечних речовин (Ukraine restriction of hazardous substances (RoHS)) 51
TCO Certified Edge Certification 51

Index **53**

1 Regulatory notices for notebook computers

This chapter provides country- and region-specific non-wireless and wireless regulatory notices and compliance information for the computer product. Some of these notices may not apply to your product.

One or more integrated wireless devices may be installed. In some environments, the use of wireless devices may be restricted. Such restrictions may apply onboard airplanes, in hospitals, near explosives, in hazardous locations, and so on. If you are uncertain of the policy that applies to the use of this product, ask for authorization to use it before you turn it on.

Accessing regulatory labels

Regulatory labels, which provide country or regional regulatory information (for example, FCC ID), may be physically located on the bottom of the computer, inside the battery bay (select models only), under the removable service door (select models only), on the back of the display, or on the wireless or modem module.

Some products may also provide electronic regulatory labels (e-labels) for radio modules in your computer. Electronic labels can be accessed through the system BIOS.

NOTE: Electronic labels are not available on all products.

NOTE: Devices not for sale or use in the United States may not contain a FCC ID.

To view electronic regulatory labels:

1. Turn on or restart the computer, and then press esc while the “Press the ESC key for Startup Menu” message is displayed at the bottom of the screen.
2. Press f10 to enter Computer Setup.
3. Use a pointing device or the arrow keys to select **Advanced**, select **Electronic Labels**, and then press enter.
4. To view an electronic label, use a pointing device or the arrow keys to select one of the listed items, and then press **OK**.

   NOTE: The list of available electronic label items varies depending on the computer model and installed devices.

5. To exit Computer Setup menus without saving your changes:

   Select the **Exit** icon in the lower-right corner of the screen, and then follow the on-screen instructions.

   – or –

   Use the arrow keys to select **Main**, select **Ignore Changes and Exit**, and then press enter.

Federal Communications Commission notice

This equipment has been tested and found to comply with the limits for a Class B digital device, pursuant to Part 15 of the FCC Rules. These limits are designed to provide reasonable protection against harmful interference in a residential installation. This equipment generates, uses, and can radiate radio frequency energy and, if not installed and used in accordance with the instructions, may cause harmful interference to radio communications. However, there is no guarantee that interference will not occur in a particular installation.

If this equipment does cause harmful interference to radio or television reception, which can be determined by turning the equipment off and on, the user is encouraged to try to correct the interference by one or more of the following measures:

- Reorient or relocate the receiving antenna.
- Increase the separation between the equipment and receiver.
- Connect the equipment to an outlet on a circuit different from that to which the receiver is connected.
- Consult the dealer or an experienced radio or television technician for help.

Modifications

The FCC requires the user to be notified that any changes or modifications made to this device that are not expressly approved by HP may void the user's authority to operate the equipment.

Cables

To maintain compliance with FCC Rules and Regulations, connections to this device must be made with shielded cables having metallic RFI/EMI connector hoods.

Declaration of Conformity for products marked with the FCC logo (United States only)

This device complies with Part 15 of the FCC Rules. Operation is subject to the following 2 conditions:

1. This device may not cause harmful interference.
2. This device must accept any interference received, including interference that may cause undesired operation.

If you have questions about the product that are *not* related to this declaration, write to

Hewlett-Packard Company

P. O. Box 692000, Mail Stop 530113

Houston, TX 77269-2000

For questions regarding this FCC declaration, write to

Hewlett-Packard Company

P. O. Box 692000, Mail Stop 510101

Houston, TX 77269-2000

or call HP at 281-514-3333

To identify your product, refer to the part, series, or model number located on the product.

Products with wireless LAN devices or HP Mobile Broadband Modules

This device must not be co-located or operating in conjunction with any other antenna or transmitter.

WARNING! **Exposure to Radio Frequency Radiation** The radiated output power of this device is below the FCC radio frequency exposure limits. Nevertheless, the device should be used in such a manner that the potential for human contact is minimized during normal operation of tablet PCs and notebook computers.

During normal operation of tablet PCs and notebook computers with displays equal to or less than 30.5 cm (12 inches): To avoid the possibility of exceeding the FCC radio frequency exposure limits, human proximity to the antennas should not be less than 2.5 cm (1 inch). To identify the location of the wireless antennas, refer to the computer user guides included with your computer.

During normal operation of notebook computers with displays greater than 30.5 cm (12 inches): To avoid the possibility of exceeding the FCC radio frequency exposure limits, human proximity to the antennas should not be less than 20 cm (8 inches), including when the computer display is closed. To identify the location of the wireless antennas, refer to the computer user guides included with your computer.

Brazil notice

Este equipamento opera em caráter secundário, isto é, não tem direito a proteção contra interferência prejudicial, mesmo de estações do mesmo tipo, e não pode causar interferência a sistemas operando em caráter primário.

Este equipamento atende aos limites de Taxa de Absorção Específica referente à exposição a campos elétricos, magnéticos e eletromagnéticos de radiofreqüências adotados pela ANATEL.

Ao operar o dispositivo a uma distância muito próxima do seu corpo, utilize um acessório de armazenamento não metálico para posicionar o dispositivo a uma distância mínima de 1,5 cm do corpo.

Canada notices

This Class B digital apparatus meets all requirements of the Canadian Interference-Causing Equipment Regulations, CAN ICES-3(B)/NMB-3(B). If this device has WLAN or Bluetooth capability, the device complies with Industry Canada licence-exempt RSS standard(s). Operation is subject to the following two conditions: (1) this device may not cause interference, and (2) this device must accept any interference, including interference that may cause undesired operation of the device.

WARNING! Exposure to Radio Frequency Radiation: The radiated output power of this device is below the Industry Canada radio frequency exposure limits. Nevertheless, the device should be used in such a manner that the potential for human contact is minimized during normal operation.

During normal operation of tablet PCs and notebook computers with displays equal to or less than 30.5 cm (12 inches): To avoid the possibility of exceeding the Industry Canada radio frequency exposure limits, human proximity to the antennas should not be less than 2.5 cm (1 inch). To identify the location of the wireless antennas, refer to the computer user guides included with your computer.

During normal operation of notebook computers with displays greater than 30.5 cm (12 inches): To avoid the possibility of exceeding the Industry Canada radio frequency exposure limits, human proximity to the antennas should not be less than 20 cm (8 inches), including when the computer display is closed. To identify the location of the wireless antennas, refer to the computer user guides included with your computer.

CAUTION: When using IEEE 802.11a wireless LAN, this product is restricted to indoor use, due to its operation in the 5.15- to 5.25-GHz frequency range. Industry Canada requires this product to be used indoors for the frequency range of 5.15 GHz to 5.25 GHz to reduce the potential for harmful interference to co-channel mobile satellite systems. High-power radar is allocated as the primary user of the 5.25- to 5.35-GHz and 5.65- to 5.85-GHz bands. These radar stations can cause interference with and/or damage to this device.

The antennas for this device are not replaceable. Any attempt at user access will damage your computer.

European Union regulatory notices

Declaration of Conformity

Products bearing the CE marking comply with one or more of the following EU Directives as may be applicable:

Low Voltage Directive 2006/95/EC; EMC Directive 2004/108/EC; Ecodesign Directive 2009/125/EC; R&TTE Directive 1999/5/EC; RoHS Directive 2011/65/EU

Compliance with these directives is assessed using applicable European Harmonised Standards.

The full Declaration of Conformity can be found at the following web site: www.hp.eu/certificates (Search with the product model name or its Regulatory Model Number (RMN), which may be found on the regulatory label.)

The point of contact for regulatory matters is Hewlett-Packard GmbH, Dept./MS:HQ-TRE, Herrenberger Strasse 140, 71034 Boeblingen, GERMANY.

Products with wireless functionality (EMF)

This product meets international guidelines (ICNIRP) for exposure to radio frequency radiation.

This product incorporates a radio transmitting and receiving device. For notebook computers in normal use, a separation distance of 20 cm ensures that radio frequency exposure levels comply with EU requirements. Products designed to be operated at closer proximities, such as tablet computers, comply with applicable EU requirements in typical operating positions, but a minimum distance of 1 cm should be maintained from the antennas.

Restrictions for product with wireless functionality

This product is designed for use without restrictions in all EU countries, plus Iceland, Liechtenstein, Norway, and Switzerland.

European telephone network declaration (Modem/Fax)

The product herewith complies with the requirements of the R&TTE Directive 1999/5/EC (Annex II) and carries the CE marking accordingly. However, due to differences between the individual PSTNs provided in different countries/regions, the approval does not, of itself, give an unconditional assurance of successful operation on every PSTN network termination point. In the event of problems, you should contact your equipment supplier in the first instance.

Ergonomics notice

Germany (English text)

When a mobile computer is used at the office workstation for display work tasks where the Visual Display Unit (VDU) Directive 90/270/EEC is applicable, an adequate external keyboard is required. Depending on the application and task, an adequate external monitor may also be necessary to attain working conditions comparable to a workstation setup.

Ref: EK1-ITB 2000 (voluntary GS certification)

Mobile computers bearing the "GS" approval mark meet the applicable ergonomic requirements. Without external keyboards, they are suitable only for short-time use of VDU tasks.

During mobile use with disadvantageous illumination conditions (e.g. direct sun light) reflections may occur, which result in reduced readability.

Germany (Deutscher text)

Wird ein mobiler Computer für Bildschirmarbeitsaufgaben verwendet, wo die Richtlinie 90/270/EEG (Bildschirmarbeitsrichtlinie) anzuwenden ist, wird eine geeignete externe Tastatur notwendig. Abhängig von der Anwendung und der Aufgabe kann ein geeigneter externer Monitor erforderlich sein, um vergleichbare Arbeitsbedingungen zu einem stationären Arbeitsplatz zu erreichen.

Ref: EK1-ITB 2000 (freiwillige GS Zertifizierung)

Mobile Computer, welche das "GS" Zeichen tragen, entsprechen den ergonomischen Anforderungen und sind nur für kurzzeitige Benutzung von Bildschirmarbeitsaufgaben geeignet.

Bei mobiler Nutzung mit ungünstigen Lichtverhältnissen (z.B. direkte Sonneneinstrahlung) kann es zu Reflexionen und damit zu Einschränkungen der Lesbarkeit der dargestellten Zeichen kommen.

Australia and New Zealand notice

This equipment incorporates a radio transmitting and receiving device. In normal use, a separation distance of 20 cm ensures that radio frequency exposure levels comply with the Australian and New Zealand Standards.

Japan notice

この装置は，クラスＢ情報技術装置です。この装置は，家庭環境で使用することを目的としていますが，この装置がラジオやテレビジョン受信機に近接して使用されると，受信障害を引き起こすことがあります。
取扱説明書に従って正しい取り扱いをして下さい。　　ＶＣＣＩ－Ｂ

5 GHz帯を使用する特定無線設備（802.11a相当）は屋内使用に限られています。この機器を屋外で使用することは電波法で禁じられています。

Wireless LAN, Wireless WAN, and Bluetooth certification markings

この製品には、認証済みの無線機器を搭載しています。

This product contains certified radio equipment.

South Korea notices

B급 기기 (가정용 방송통신기자재)

이 기기는 가정용(B급) 전자파적합기기로서 주로 가정에서 사용하는 것을 목적으로 하며, 모든 지역에서 사용할 수 있습니다.

무선적용제품

해당 무선설비가 전파혼신 가능성이 있으므로 인명안전과 관련된 서비스는 할 수 없음 (무선모듈 제품이 설치되어 있는 경우).

몸 가까이에서 장치를 작동할 경우 , 비금속 저장 액세서리를 사용하여 장치와 몸 사이에 2.5cm 이상의 거리를 유지하십시오 .

Mexico notice

Declaración para México

La operación de este equipo está sujeta a las siguientes dos condiciones: (1) es posible que este equipo o dispositivo no cause interferencia perjudicial y (2) este equipo o dispositivo debe aceptar cualquier interferencia, incluyendo la que pueda causar su operación no deseada.

If your product is provided with wireless accessories such as a keyboard or mouse and you need to identify the model of the accessory, refer to the label included on that accessory.

Singapore wireless notice

Turn off any WWAN devices while you are onboard aircraft. The use of these devices onboard aircraft is illegal, may be dangerous to the operation of the aircraft, and may disrupt the cellular network. Failure to observe this instruction may lead to suspension or denial of cellular services to the offender, or legal action, or both.

Users are reminded to restrict the use of radio equipment in fuel depots, chemical plants, and where blasting operations are in progress.

As with other mobile radio transmitting equipment, users are advised that for satisfactory operation of the equipment and for the safety of personnel, no part of the human body should be allowed to come too close to the antennas during operation of the equipment.

This device has been designed to comply with applicable requirements for exposure to radio waves, based on scientific guidelines that include margins intended to assure the safety of all people, regardless of health and age. These radio wave exposure guidelines employ a unit of measurement known as the specific absorption rate (SAR). Tests for SAR are conducted using standardized methods, with the phone transmitting at its highest certified power level in all used frequency bands. The SAR data information is based on CENELEC's standards EN50360 and EN50361, which use the limit of 2 watts per kilogram, averaged over 10 grams of tissue.

Thailand WWAN wireless notice

This telecom equipment has complied with NTC regulations.

เครื่องโทรคมนาคมและอุปกรณ์นี้ มีความสอดคล้องตามข้อกำหนดของ กทช.

Taiwan NCC notices

Wireless LAN 802.11a devices

在5.25G ~5.35G頻帶內操作之無線
資訊傳輸設備僅適於室內使用

Wireless LAN 802.11 devices/Bluetooth devices/Short range devices

低功率電波輻射性電機管理辦法

第十二條 經型式認證合格之低功率射頻電機，非經許可，公司、商號或使用者均不得擅自變更頻率、加大功率或變更原設計之特性及功能。

第十四條 低功率射頻電機之使用不得影響飛航安全及干擾合法通信；經發現有干擾現象時，應立即停用，並改善至無干擾時方得繼續使用。

前項合法通信，指依電信規定作業之無線電信。低功率射頻電機須忍受合法通信或工業、科學及醫療用電波輻射性電機設備之干擾。

Airline travel notice

Use of electronic equipment onboard commercial aircraft is at the discretion of the airline.

User-replaceable battery notices

When a battery has reached the end of its useful life, do not dispose of the battery in general household waste. Follow the local laws and regulations in your area for computer battery disposal.

HP encourages customers to recycle used electronic hardware, HP original print cartridges, and rechargeable batteries. For more information about recycling programs, refer to the HP Web site at http://www.hp.com/recycle.

For information about removing a user-replaceable battery, refer to the user guide included with the product.

Factory-sealed battery notices

The battery[ies] in this product cannot be easily replaced by users themselves. Removing or replacing the battery could affect your warranty coverage. If a battery is no longer holding a charge, contact support.

When a battery has reached the end of its useful life, do not dispose of the battery in general household waste. Follow the local laws and regulations in your area for battery disposal.

Laser compliance

WARNING! Use of controls or adjustments, or performance of procedures other than those specified in the laser product installation guide, may result in hazardous radiation exposure. To reduce the risk of exposure to hazardous radiation:

- Do not try to open the module enclosure. There are no user-serviceable components inside.
- Do not operate controls, make adjustments, or perform procedures to the laser device other than those specified in the laser product installation guide.
- Allow only authorized service providers to repair the unit.

This product may be provided with an optical storage device (for example, a CD or DVD drive) and/or a fiber optic transceiver. Each of these devices that contain a laser is classified as a Class 1 Laser Product in accordance with IEC/EN 60825-1 and meets the requirements for safety of that standard.

Each laser product complies with US FDA regulations of 21 CFR 1040.10 and 1040.11 or complies with those regulations except for deviations pursuant to Laser Notice No. 50 dated June 24, 2007.

Modem notices

WARNING! To reduce the risk of fire, electric shock, and injury to persons when using this device, always follow basic safety precautions, including the following:

- Do not use this product near water—for example, near a bathtub, wash bowl, kitchen sink or laundry tub, in a wet basement, or near a swimming pool.
- Avoid using this product during an electrical storm. There is a remote risk of electric shock from lightning.
- Do not use this product to report a gas leak while in the vicinity of the leak.
- Always disconnect the modem cable before opening the equipment enclosure or touching an uninsulated modem cable, jack, or internal component.
- If this product was not provided with a telephone line cord, use only No. 26 AWG or larger telecommunication line cord.
- Do not plug a modem or telephone cable into the RJ-45 (network) jack.

SAVE THESE INSTRUCTIONS.

Telecommunications device approvals

The telecommunications device in the computer is approved for connection to the telephone network in the countries and regions whose approval markings are indicated on the product label located on the bottom of the computer or on the modem.

Refer to the user guide included with the product to ensure that the product is configured for the country or region in which the product is located. Selecting a country or region other than the one in which it is located may cause the modem to be configured in a way that violates the telecommunication regulations/laws of

that country or region. In addition, the modem may not function properly if the correct country or region selection is not made. If, when you select a country or region, a message appears that states that the country or region is not supported, this means that the modem has not been approved for use in this country or region and thus should not be used.

U.S. modem statements

This equipment complies with Part 68 of the FCC Rules and the requirements adopted by the ACTA. On the bottom of the computer or on the modem is a label that contains, among other information, a product identifier in the format US:AAAEQ##TXXXX. Provide this information to the telephone company if you are requested to do so.

Applicable certification jack USOC = RJ11C. A plug and jack used to connect this equipment to the premises wiring and telephone network must comply with the applicable FCC Part 68 rules and requirements adopted by the ACTA. A compliant telephone cord and modular plug is provided with this product. It is designed to be connected to a compatible modular jack that is also compliant. See installation instructions for details.

The REN is used to determine the number of devices that may be connected to a telephone line. Excessive RENs on a telephone line may result in the devices not ringing in response to an incoming call. In most but not all locations, the sum of RENs should not exceed five (5.0). To be certain of the number of devices that may be connected to a line, as determined by the total RENs, contact the local telephone company. For products approved after July 23, 2001, the REN for this product is part of the product identifier that has the format US:AAAEQ##TXXXX. The digits represented by ## are the REN without a decimal point (e.g., 03 is a REN of 0.3). For earlier products, the REN is separately shown on the label.

If this HP equipment causes harm to the telephone network, the telephone company will notify you in advance that temporary discontinuance of service may be required. But, if advance notice isn't practical, the telephone company will notify you as soon as possible. Also, you will be advised of your right to file a complaint with the FCC if you believe it is necessary.

The telephone company may make changes to its facilities, equipment, operations, or procedures that could affect the operation of the equipment. If this happens, the telephone company will provide advance notice in order for you to make necessary modifications to maintain uninterrupted telephone service.

If trouble is experienced with this equipment, call technical support. If the equipment is causing harm to the telephone network, the telephone company may request that you disconnect the equipment until the problem is resolved. You should perform repairs only to the equipment specifically discussed in the “Troubleshooting” section of the user guide, if one is provided.

Connection to party line service is subject to state tariffs. Contact the state public utility commission, public service commission, or corporation commission for information.

If your home has specially wired alarm equipment connected to the telephone line, ensure that the installation of this HP equipment does not disable your alarm equipment. If you have questions about what will disable alarm equipment, consult your telephone company or a qualified installer.

The Telephone Consumer Protection Act of 1991 makes it unlawful for any person to use a computer or other electronic device, including a fax machine, to send any message unless such message clearly contains in a margin at the top or bottom of each transmitted page, or on the first page of the transmission, the date and time it is sent and an identification of the business, other entity, or other individual sending the message, and the telephone number of the sending machine or such business, other entity, or individual. (The telephone number provided may not be a 900 number or any other number for which charges exceed local or long-distance transmission charges).

In order to program this information into your fax machine, you should complete the steps outlined in the faxing software instructions.

U.S. modem declarations

Refer to the following modem vendor declarations for the modem device installed in your computer:

agere systems

Brad Grande
Technical Manager

1110 American Parkway NE
Lehigh Valley Central Campus
Allentown, PA 18109
Phone: 610-712-7853
bgrande@agere.com

Supplier's Declaration of Conformity

Reference Number: Delphi D40 (revision AM5)
Place of Issue: Allentown, PA, USA
Date of Issue: 30th November 2006

Agere Systems Inc. at 1110 American Parkway NE, Lehigh Valley Central Campus, Allentown, PA 18109 in the United States of America, hereby certifies that the Modem, bearing labelling identification number **US: AGSMD01BDELPHI** complies with the Federal Communications Commission's ("FCC") Rules and Regulations 47 CFR Part 68, and the Administrative Council on Terminal Attachments ("ACTA")-adopted technical criteria TIA/EIA/IS-968, 968-A, 968-A-1, 968-A-2 and 968-A-3 Telecommunications – Telephone Terminal Equipment –Technical Requirements for Connection of Terminal Equipment To the Telephone Network.

Brad Grand
Technical Manager

Canada modem statements

This equipment meets the applicable Industry Canada technical specifications.

The Ringer Equivalence Number, REN, is an indication of the maximum number of devices allowed to be connected to a telephone interface. The termination on an interface may consist of any combination of devices, subject only to the requirement that the sum of the RENs of all devices does not exceed 5. The REN for this terminal equipment is 1.0.

Japan modem statements

If the computer does not have the Japanese certification mark on the bottom of the computer, refer to the appropriate certification marking below.

The Japanese certification mark for the V.92 56K Data/Fax Modem is below:

New Zealand modem statements

The grant of a Telepermit for any item of terminal equipment indicates only that Telecom has accepted that the item complies with minimum conditions for connection to its network. It indicates no endorsement of the product by Telecom, nor does it provide any sort of warranty. Above all, it provides no assurance that any item will work correctly in all respects with another item of Telepermitted equipment of a different make or model, nor does it imply that any product is compatible with all of Telecom's network services.

This equipment is not capable, under all operating conditions, of correct operation at the higher speeds for which it is designed. Telecom will accept no responsibility should difficulties arise in such circumstances.

If this device is equipped with pulse dialing, note that there is no guarantee that Telecom lines will always continue to support pulse dialing.

Use of pulse dialing, when this equipment is connected to the same line as other equipment, may give rise to bell tinkle or noise and may also cause a false answer condition. Should such problems occur, the user should *not* contact the Telecom Faults Service.

Some parameters required for compliance with Telecom's Telepermit requirements are dependent on the equipment (PC) associated with this device. The associated equipment shall be set to operate within the following limits for compliance with Telecom's Specifications:

a. There shall be no more than 10 call attempts to the same number within any 30-minute period for any single manual call initiation.

b. The equipment shall go on-hook for a period of not less than 30 seconds between the end of one attempt and the beginning of the next attempt.

c. Where automatic calls are made to different numbers, the equipment shall be set to go on-hook for a period of not less than 5 seconds between the end of one attempt and the beginning of the next attempt.

d. The equipment shall be set to ensure that calls are answered between 3 and 30 seconds of receipt of ringing (So set between 2 and 10).

Voice support

All persons using this device for recording telephone conversations shall comply with New Zealand law. This requires that at least one party to the conversation is aware that it is being recorded. In addition, the Principles enumerated in the Privacy Act 1993 shall be complied with in respect to the nature of the personal information collected, the purpose for its collection, how it is to be used, and what is disclosed to any other party.

This equipment shall not be set to make automatic calls to the Telecom '111' Emergency Service.

Power cord notice

If you were not provided with a power cord for the computer or for an external power accessory intended for use with the computer, you should purchase a power cord that is approved for use in your country or region.

The power cord must be rated for the product and for the voltage and current marked on the product's electrical ratings label. The voltage and current rating of the cord should be greater than the voltage and current rating marked on the product. In addition, the diameter of the wire must be a minimum of **0.75 mm²**/18AWG, and the length of the cord must be between **1.0 m** (3.2 ft) and **2 m** (6.56 ft). If you have questions about the type of power cord to use, contact your authorized service provider.

A power cord should be routed so that it is not likely to be walked on or pinched by items placed upon it or against it. Particular attention should be paid to the plug, electrical outlet, and the point where the cord exits from the product.

Japan power cord notice

製品には、同梱された電源コードをお使い下さい。
同梱された電源コードは、他の製品では使用出来ません。

DC plug of external HP power supply

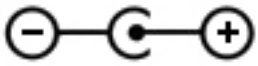

Macrovision Corporation notice

This product incorporates copyright protection technology that is protected by method claims of certain U.S. patents and other intellectual property rights owned by Macrovision Corporation and other rights owners. Use of this copyright protection technology must be authorized by Macrovision Corporation and is intended for home and other limited viewing uses only, unless otherwise authorized by Macrovision Corporation. Reverse engineering or disassembly is prohibited.

2 Regulatory notices for desktops, thin clients and personal workstations

Modem notices

WARNING! To reduce the risk of fire, electric shock, and injury to persons when using this device, always follow basic safety precautions, including the following:

- Do not use this product near water—for example, near a bathtub, wash bowl, kitchen sink or laundry tub, in a wet basement, or near a swimming pool.
- Avoid using this product during an electrical storm. There is a remote risk of electric shock from lightning.
- Do not use this product to report a gas leak while in the vicinity of the leak.
- Always disconnect the modem cable before opening the equipment enclosure or touching an uninsulated modem cable, jack, or internal component.
- If this product was not provided with a telephone line cord, use only No. 26 AWG or larger telecommunication line cord.
- Do not plug a modem or telephone cable into the RJ-45 (Ethernet network) jack.

SAVE THESE INSTRUCTIONS.

Telecommunications device approvals

The telecommunications device in the computer is approved for connection to the telephone network in the countries and regions whose approval markings are indicated on the product label located on the bottom of the computer or on the modem.

Refer to the user guide included with the product to ensure that the product is configured for the country or region in which the product is located. Selecting a country or region other than the one in which it is located may cause the modem to be configured in a way that violates the telecommunication regulations/laws of that country or region. In addition, the modem may not function properly if the correct country or region selection is not made. If, when you select a country or region, a message appears that states that the country or region is not supported, this means that the modem has not been approved for use in this country or region and thus should not be used.

U.S. modem statements

This equipment complies with Part 68 of the FCC Rules and the requirements adopted by the ACTA. On the bottom of the computer or on the modem is a label that contains, among other information, a product identifier in the format US:AAAEQ##TXXXX. Provide this information to the telephone company if you are requested to do so.

Applicable certification jack USOC = RJ11C. A plug and jack used to connect this equipment to the premises wiring and telephone network must comply with the applicable FCC Part 68 rules and requirements adopted by the ACTA. A compliant telephone cord and modular plug is provided with this product. It is designed to be connected to a compatible modular jack that is also compliant. See installation instructions for details.

The REN is used to determine the number of devices that may be connected to a telephone line. Excessive RENs on a telephone line may result in the devices not ringing in response to an incoming call. In most but not all locations, the sum of RENs should not exceed five (5.0). To be certain of the number of devices that may be connected to a line, as determined by the total RENs, contact the local telephone company. For products approved after July 23, 2001, the REN for this product is part of the product identifier that has the format US:AAAEQ##TXXXX. The digits represented by ## are the REN without a decimal point (e.g., 03 is a REN of 0.3). For earlier products, the REN is separately shown on the label.

If this HP equipment causes harm to the telephone network, the telephone company will notify you in advance that temporary discontinuance of service may be required. But, if advance notice isn't practical, the telephone company will notify you as soon as possible. Also, you will be advised of your right to file a complaint with the FCC if you believe it is necessary.

The telephone company may make changes to its facilities, equipment, operations, or procedures that could affect the operation of the equipment. If this happens, the telephone company will provide advance notice in order for you to make necessary modifications to maintain uninterrupted telephone service.

If trouble is experienced with this equipment, call technical support. If the equipment is causing harm to the telephone network, the telephone company may request that you disconnect the equipment until the problem is resolved. You should perform repairs only to the equipment specifically discussed in the “Troubleshooting” section of the user guide, if one is provided.

Connection to party line service is subject to state tariffs. Contact the state public utility commission, public service commission, or corporation commission for information.

If your home has specially wired alarm equipment connected to the telephone line, ensure that the installation of this HP equipment does not disable your alarm equipment. If you have questions about what will disable alarm equipment, consult your telephone company or a qualified installer.

The Telephone Consumer Protection Act of 1991 makes it unlawful for any person to use a computer or other electronic device, including a fax machine, to send any message unless such message clearly contains in a margin at the top or bottom of each transmitted page, or on the first page of the transmission, the date and time it is sent and an identification of the business, other entity, or other individual sending the message, and the telephone number of the sending machine or such business, other entity, or individual. (The telephone number provided may not be a 900 number or any other number for which charges exceed local or long-distance transmission charges).

In order to program this information into your fax machine, you should complete the steps outlined in the faxing software instructions.

Canadian modem statements

This equipment meets the applicable Industry Canada technical specifications.

The Ringer Equivalence Number, REN, is an indication of the maximum number of devices allowed to be connected to a telephone interface. The termination on an interface may consist of any combination of devices, subject only to the requirement that the sum of the RENs of all devices does not exceed 5. The REN for this terminal equipment is 1.0.

Japanese modem statements

If the computer does not have the Japanese certification mark on the bottom of the computer, refer to the appropriate certification marking below.

The Japanese certification mark for the LSI Corporation PCI-SV92EX Soft modem is below:

A070107003

T

New Zealand modem statements

The grant of a Telepermit for any item of terminal equipment indicates only that Telecom has accepted that the item complies with minimum conditions for connection to its network. It indicates no endorsement of the product by Telecom, nor does it provide any sort of warranty. Above all, it provides no assurance that any item will work correctly in all respects with another item of Telepermitted equipment of a different make or model, nor does it imply that any product is compatible with all of Telecom's network services.

This equipment is not capable, under all operating conditions, of correct operation at the higher speeds for which it is designed. Telecom will accept no responsibility should difficulties arise in such circumstances.

If this device is equipped with pulse dialing, note that there is no guarantee that Telecom lines will always continue to support pulse dialing.

Use of pulse dialing, when this equipment is connected to the same line as other equipment, may give rise to bell tinkle or noise and may also cause a false answer condition. Should such problems occur, the user should *not* contact the Telecom Faults Service.

Some parameters required for compliance with Telecom's Telepermit requirements are dependent on the equipment (PC) associated with this device. The associated equipment shall be set to operate within the following limits for compliance with Telecom's Specifications:

a. There shall be no more than 10 call attempts to the same number within any 30-minute period for any single manual call initiation.

b. The equipment shall go on-hook for a period of not less than 30 seconds between the end of one attempt and the beginning of the next attempt.

c. Where automatic calls are made to different numbers, the equipment shall be set to go on-hook for a period of not less than 5 seconds between the end of one attempt and the beginning of the next attempt.

d. The equipment shall be set to ensure that calls are answered between 3 and 30 seconds of receipt of ringing (So set between 2 and 10).

Voice support

All persons using this device for recording telephone conversations shall comply with New Zealand law. This requires that at least one party to the conversation is aware that it is being recorded. In addition, the Principles enumerated in the Privacy Act 1993 shall be complied with in respect to the nature of the personal information collected, the purpose for its collection, how it is to be used, and what is disclosed to any other party.

This equipment shall not be set to make automatic calls to the Telecom '111' Emergency Service.

Electromagnetic compatibility notices

This guide provides country- and region-specific nonwireless and wireless regulatory notices and compliance information for the computer product. Some of these notices may not apply to your product.

One or more integrated wireless devices may be installed. In some environments, the use of wireless devices may be restricted. Such restrictions may apply onboard airplanes, in hospitals, near explosives, in hazardous

locations, and so on. If you are uncertain of the policy that applies to the use of this product, ask for authorization to use it before you turn it on.

Federal Communications Commission notice

This equipment has been tested and found to comply with the limits for a Class B digital device, pursuant to Part 15 of the FCC Rules. These limits are designed to provide reasonable protection against harmful interference in a residential installation. This equipment generates, uses, and can radiate radio frequency energy and, if not installed and used in accordance with the instructions, may cause harmful interference to radio communications. However, there is no guarantee that interference will not occur in a particular installation. If this equipment does cause harmful interference to radio or television reception, which can be determined by turning the equipment off and on, the user is encouraged to try to correct the interference by one or more of the following measures:

- Reorient or relocate the receiving antenna.
- Increase the separation between the equipment and the receiver.
- Connect the equipment into an outlet on a circuit different from that to which the receiver is connected.
- Consult the dealer or an experienced radio or television technician for help.

Modifications

The FCC requires the user to be notified that any changes or modifications made to this device that are not expressly approved by Hewlett-Packard Company may void the user's authority to operate the equipment.

Cables

Connections to this device must be made with shielded cables with metallic RFI/EMI connector hoods in order to maintain compliance with FCC Rules and Regulations.

Declaration of conformity for products marked with the FCC logo (United States only)

This device complies with Part 15 of the FCC Rules. Operation is subject to the following two conditions:

1. This device may not cause harmful interference, and
2. This device must accept any interference received, including interference that may cause undesired operation.

For questions regarding the product, contact:

Hewlett-Packard Company P.O. Box 692000, Mail Stop 530113 Houston, Texas 77269-2000

For questions regarding this FCC declaration, contact:

Hewlett-Packard Company P.O. Box 692000, Mail Stop 510101 Houston, Texas 77269-2000

Or, call (281) 514-3333.

To identify this product, refer to the part, series, or model number found on the product.

Products with wireless LAN devices

This product may be equipped with a wireless LAN device. This device must not be co-located or operating in conjunction with any other antenna or transmitter.

WARNING! **Exposure to Radio Frequency Radiation** The radiated output power of this device is below the FCC radio frequency exposure limits. Nevertheless, the device should be used in such a manner that the potential for human contact is minimized during normal operation.

During normal operation: To avoid the possibility of exceeding the FCC radio frequency exposure limits, human proximity to the antennae should not be less than 20 cm (8 inches). To identify the location of the wireless antennae, refer to the documentation included with the computer.

CAUTION: When using IEEE 802.11a wireless LAN, this product is restricted to indoor use, due to its operation in the 5.15- to 5.25-GHz frequency range. The FCC requires this product to be used indoors for the frequency range of 5.15 GHz to 5.25 GHz to reduce the potential for harmful interference to cochannel mobile satellite systems. High-power radar is allocated as the primary user of the 5.25- to 5.35-GHz and 5.65- to 5.85-GHz bands. These radar stations can cause interference with and/or damage to this device.

Australia telecom statement

The computer must be connected to the Telecommunication Network through a line cord that meets the requirements of AS/CA S008.

WARNING! Modems without integral RJ11 connector that are shipped with this computer should not be installed in any other device.

This equipment incorporates a radio transmitting and receiving device. In normal use, a separation distance of 20 cm ensures that radio frequency exposure levels comply with the Australian and New Zealand Standards.

Brazil notice

Este equipamento opera em caráter secundário, isto é, não tem direito a proteção contra interferência prejudicial, mesmo de estações do mesmo tipo, e não pode causar interferência a sistemas operando em caráter primário.

CAUTION: A alimentação de energia é predefinida para 220/230Vv. Se você possuir tomada elétrica de 110/115Vv, por favor, altere a chave na parte traseira do seu computador para a tensão correta.

Canadian notice

This Class B digital apparatus meets all requirements of the Canadian Interference-Causing Equipment Regulations, CAN ICES-3(B)/NMB-3(B). If this device has WLAN or Bluetooth capability, this device complies with Industry Canada license-exempt RSS standard(s). Operation is subject to the following two conditions: (1) this device may not cause interference, and (2) this device must accept any interference, including interference that may cause undesired operation of the device.

WARNING! **Exposure to Radio Frequency Radiation** The radiated output power of this device is below the Industry Canada radio frequency exposure limits. Nevertheless, the device should be used in such a manner that the potential for human contact is minimized during normal operation.

During normal operation: To avoid the possibility of exceeding the Industry Canada radio frequency exposure limits, human proximity to the antennae should not be less than 20 cm (8 inches). To identify the location of the wireless antennae, refer to the documentation included with the computer.

CAUTION: When using IEEE 802.11a wireless LAN, this product is restricted to indoor use, due to its operation in the 5.15- to 5.25-GHz frequency range. Industry Canada requires this product to be used indoors for the frequency range of 5.15 GHz to 5.25 GHz to reduce the potential for harmful interference to co-channel mobile satellite systems. High-power radar is allocated as the primary user of the 5.25- to 5.35-GHz and 5.65- to 5.85-GHz bands. These radar stations can cause interference with and/or damage to this device.

The antenna for this device is not replaceable. Any attempt at user modification may damage your computer.

European Union regulatory notices

Declaration of Conformity

Products bearing the CE marking comply with one or more of the following EU Directives as may be applicable:

Low Voltage Directive 2006/95/EC; EMC Directive 2004/108/EC; Ecodesign Directive 2009/125/EC; R&TTE Directive 1999/5/EC; RoHS Directive 2011/65/EU

Compliance with these directives is assessed using applicable European Harmonised Standards.

The full Declaration of Conformity can be found at the following web site: www.hp.eu/certificates (Search with the product model name or its Regulatory Model Number (RMN), which may be found on the regulatory label.)

The point of contact for regulatory matters is Hewlett-Packard GmbH, Dept./MS:HQ-TRE, Herrenberger Strasse 140, 71034 Boeblingen, GERMANY.

Products with wireless functionality (EMF)

This product meets international guidelines (ICNIRP) for exposure to radio frequency radiation.

This product may incorporate a radio transmitting and receiving device. For desktop computers in normal use, a separation distance of 20 cm ensures that radio frequency exposure levels comply with EU requirements.

Restrictions for product with wireless functionality

This product is designed for use without restrictions in all EU countries, plus Iceland, Liechtenstein, Norway, and Switzerland.

European telephone network declaration (Modem/Fax)

The product herewith complies with the requirements of the R&TTE Directive 1999/5/EC (Annex II) and carries the CE marking accordingly. However, due to differences between the individual PSTNs provided in different countries/regions, the approval does not, of itself, give an unconditional assurance of successful operation on every PSTN network termination point. In the event of problems, you should contact your equipment supplier in the first instance.

This equipment has been designed to work with analogue DTMF Networks. This equipment may have internetworking difficulties in PSTN networks that only support Pulse Dialing. Please consult with your network operator for further assistance.

Ergonomics notice

Germany (English text)

A computer system comprising HP brand products meets the applicable German ergonomic requirements if all affected constituent products bear the "GS" approval mark, for example Business Desktop PC, keyboard, PC-mouse and monitor.

Germany (Deutscher text)

Ein aus HP Produkten bestehendes Computersystem erfüllt die anwendbaren ergonomischen Anforderungen, wenn alle verwendeten Komponenten das „GS“ Zeichen tragen, wie z. B. Business Desktop PC, Tastatur, PC-Maus und Bildschirm.

Japan notice

この装置は、クラス B 情報技術装置です。この装置は、家 庭環境で使用することを目的としていますが、この装置が ラジオやテレビジョン受信機に近接して使用されると、受 信障害を引き起こすことがあります。取扱説明書に従って 正しい取り扱いをして下さい。VCCI-B

5 GHz帯を使用する特定無線設備（802.11a相当）は屋内使用に限られています。この機器を屋外で使用することは電波法で禁じられています。

Wireless LAN and Bluetooth certification markings

このデバイスに無線装置が搭載されている場合、それは認定された無線装置です。

If this device contains radio equipment, it is certified radio equipment.

South Korea notices

B급 기기 (가정용 방송통신기자재)

이 기기는 가정용(B급) 전자파적합기기로서 주로 가정에서 사용하는 것을 목적으로 하며, 모든 지역에서 사용할 수 있습니다.

무선적용제품

해당 무선설비가 전파혼신 가능성이 있으므로 인명안전과 관련된 서비스는 할 수 없음 (무선모듈 제품이 설치되어 있는 경우).

해당 무선설비는 전파혼신 가능성이 있으므로 인명안전과 관련된 서비스는 할 수 없음 (무선모듈제품이 설치되어 있는 경우).

이 장비는 무선장비 안테나와 사용자의 최소거리가 20cm를 유지한 상태로 설치되고 운영되야 합니다.

This equipment should be installed and operated with a minimum distance of 20 cm between the radiator and personnel.

Mexico notice

Declaración para México

La operación de este equipo está sujeta a las siguientes dos condiciones: (1) es posible que este equipo o dispositivo no cause interferencia perjudicial y (2) este equipo o dispositivo debe aceptar cualquier interferencia, incluyendo la que pueda causar su operación no deseada.

If your product is provided with wireless accessories such as a keyboard or mouse and you need to identify the model of the accessory, refer to the label included on that accessory.

Taiwan NCC notices

Wireless LAN 802.11a devices

在5.25G ~5.35G頻帶內操作之無線
資訊傳輸設備僅適於室內使用

Wireless LAN 802.11 devices/Bluetooth devices/Short range devices

低功率電波輻射性電機管理辦法

第十二條 經型式認證合格之低功率射頻電機，非經許可，公司、商號或使用者均不得擅自變更頻率、加大功率或變更原設計之特性及功能。

第十四條 低功率射頻電機之使用不得影響飛航安全及干擾合法通信；經發現有干擾現象時，應立即停用，並改善至無干擾時方得繼續使用。

前項合法通信，指依電信規定作業之無線電信。低功率射頻電機須忍受合法通信或工業、科學及醫療用電波輻射性電機設備之干擾。

3 Safety notices for notebook computers

WARNING! To reduce the risk of serious injury, read the *Safety & Comfort Guide*. It describes proper workstation setup, posture, and health and work habits for computer users, and provides important electrical and mechanical safety information. This guide is located on the Web at http://www.hp.com/ergo and on the Documentation CD that is included with the product.

Heat-related safety warning notice

WARNING! To reduce the possibility of heat-related injuries or of overheating the computer, do not place the computer directly on your lap or obstruct the computer air vents. Use the computer only on a hard, flat surface. Do not allow another hard surface, such as an adjoining optional printer, or a soft surface, such as pillows or rugs or clothing, to block airflow. Also, do not allow the AC adapter to contact the skin or a soft surface, such as pillows or rugs or clothing, during operation. The computer and the AC adapter comply with the user-accessible surface temperature limits defined by the International Standard for Safety of Information Technology Equipment (IEC/EN 60950).

Potential safety conditions notice

If you notice any of the following conditions (or if you have other safety concerns), do not use the computer: crackling, hissing, or popping sound, or a strong odor or smoke coming from the computer. It is normal for these conditions to appear when an internal electronic component fails in a safe and controlled manner. However, these conditions may also indicate a potential safety issue. Do not assume it is a safe failure. Turn off the computer, disconnect it from its power source, and contact technical support for assistance.

User-replaceable battery notices

WARNING! Risk of explosion if battery is replaced by an incorrect type. Dispose of used batteries according to the instructions.

WARNING! To reduce the risk of fire or burns, do not disassemble, crush, or puncture; do not short external contacts; do not dispose of in fire or water.

WARNING! Keep the battery away from children.

WARNING! To reduce potential safety issues, only the battery provided with the computer, a replacement battery provided by HP, or a compatible battery purchased as an accessory from HP should be used with the computer.

Headset and earphone volume level notice

WARNING! Listening to music at high volume levels and for extended durations can damage one's hearing. To reduce the risk of hearing damage, lower the volume to a safe, comfortable level and reduce the amount of time listening at high levels.

For your own safety, before using headsets or earphones, always reset the volume. Some headphones are louder than other headphones, even if the volume control setting is the same.

Changing the default audio or equalizer settings might lead to higher volume and should only be done with caution.

For your own safety, headsets or earphones used with this product should comply with the headphone limits in EN 50332-2.

If the computer includes a headset or earphones, this combination is in compliance to EN 50332-1.

Power cord notices

WARNING! To reduce the risk of electric shock or damage to the equipment:

- Plug the power cord into an AC outlet that is easily accessible at all times.
- Disconnect power from the computer by unplugging the power cord from the AC outlet.
- If provided with a 3-pin attachment plug on the power cord, plug the cord into a grounded (earthed) 3-pin outlet. Do not disable the power cord grounding pin, for example, by attaching a 2-pin adapter. The grounding pin is an important safety feature.

WARNING! To reduce potential safety issues, only the AC adapter provided with the computer, a replacement AC adapter provided by HP, or an AC adapter purchased as an accessory from HP should be used with the computer.

Brazil notice

Este equipamento deve ser conectado obrigatoriamente em tomada de rede de energia elétrica que possua aterramento (três pinos), conforme a norma nbr abnt 5410,visando a segurança dos usuários contra choques elétricos.

Cleaning the keyboard

WARNING! To reduce the risk of electric shock or damage to internal components, do not use a vacuum cleaner attachment to clean the keyboard. A vacuum cleaner can deposit household debris on the keyboard surface. Clean the keyboard regularly to prevent keys from sticking and to remove dust, lint, and particles that can become trapped beneath the keys. A can of compressed air with a straw extension can be used to blow air around and under the keys to loosen and remove debris.

Travel notice

WARNING! To reduce the risk of electric shock, fire, or damage to the equipment, do not attempt to power the computer with a voltage converter kit sold for appliances.

China safety notices

China: Altitude notice

Altitude warning for products not certified for use in >5000 m

仅适用于海拔 2000m 以下地区安全使用

– or –

仅适用于海拔 2000 米以下地区安全使用

China: Tropical warning notice

Tropical warning for products not certified for use in tropical regions.

仅适用于非热带气候条件下安全使用

Norway and Sweden: Cable grounding notice for products with a TV tuner

CAUTION: To reduce potential safety issues, use a galvanic isolator when connecting to a cable distribution system.

Taiwan BSMI notice

台灣 BSMI 注意事項

使用過度恐傷害視力

1. 使用 30 分鐘請休息 10 分鐘。
2. 2 歲以下幼兒不看螢幕， 2 歲以上每天看螢幕不要超過 1 小時。

4 Safety notices for desktops, thin clients and personal workstations

Important safety information

WARNING! To reduce the risk of serious injury, read the *Safety & Comfort Guide*. It describes proper workstation setup, posture, and health and work habits for computer users, and provides important electrical and mechanical safety information. This guide is located on the Web at http://www.hp.com/ergo and on the Documentation CD that is included with the product.

To reduce the risk of electric shock or damage to the equipment:

- Plug the power cord into an AC outlet that is easily accessible at all times.
- Disconnect power from the computer by unplugging the power cord from the AC outlet.
- If provided with a 3-pin attachment plug on the power cord, plug the cord into a grounded (earthed) 3-pin outlet. Do not disable the power cord grounding pin, for example, by attaching a 2-pin adapter. The grounding pin is an important safety feature.

The computer may be heavy; be sure to use ergonomically correct lifting procedures when moving it.

Install the computer near an AC outlet. The AC power cord is your computer's main AC disconnecting device and must be easily accessible at all times. For your safety, the power cord provided with your computer has a grounded plug. Always use the power cord with a properly grounded wall outlet, to avoid the risk of electrical shock.

To reduce the possibility of an electric shock from the telephone network, plug your computer into the AC outlet before connecting it to the telephone line. Also, disconnect the telephone line before unplugging your computer from the AC power outlet.

Always disconnect the modem cord from the telephone system before installing or removing your computer cover.

Do not operate the computer with the cover removed.

For your safety, always unplug the computer from its power source and from any telecommunications systems (such as telephone lines), networks, or modems before performing any service procedures. Failure to do so may result in personal injury or equipment damage. Hazardous voltage levels are inside the power supply and modem of this product.

CAUTION: If your computer is provided with a voltage select switch for use in a 115 or 230 V power system, the voltage select switch has been pre-set to the correct voltage setting for use in the particular country/region where it was initially sold. Changing the voltage select switch to the incorrect position can damage your computer and void any implied warranty.

This product has not been evaluated for connection to an "IT" power system (an AC distribution system with no direct connection to earth, according to IEC/EN 60950).

Installation conditions

See installation instructions before connecting this equipment to the input supply.

WARNING! The equipment must be provided with a proper AC protective earth (PE) ground connection.

Energized and moving parts may be inside the computer. Disconnect power to the equipment before removing the enclosure. Replace and secure the enclosure before re-energizing the equipment.

Battery replacement notice

WARNING! The product may contain an internal lithium manganese dioxide, vanadium pentoxide, or alkaline battery or battery pack. There is risk of fire and burns if the battery pack is not handled properly. To reduce the risk of personal injury:

- Do not attempt to recharge the battery.
- Do not expose to temperatures higher than 60° C (140° F).
- Do not disassemble, crush, puncture, short external contacts, or dispose of in fire or water.
- Risk of explosion if battery is replaced by an incorrect type. Dispose of used batteries according to the instructions.
- Replace only with the HP spare designated for this product.

For information about removing a battery, refer to your computer documentation.

Batteries, battery packs, and accumulators should not be disposed of together with the general household waste. In order to forward them to recycling or proper disposal, please use the public collection system or return them to HP, an authorized HP partner, or their agents.

The Taiwan EPA requires dry battery manufacturing or importing firms, in accordance with Article 15 of the Waste Disposal Act, to indicate the recovery marks on the batteries used in sales, giveaways, or promotions. Contact a qualified Taiwanese recycler for proper battery disposal.

Headset and earphone volume level notice

WARNING! Listening to music at high volume levels and for extended durations can damage one's hearing. To reduce the risk of hearing damage, lower the volume to a safe, comfortable level and reduce the amount of time listening at high levels.

For your own safety, before using headsets or earphones, always reset the volume. Some headphones are louder than other headphones, even if the volume control setting is the same.

Changing the default audio or equalizer settings might lead to higher volume and should only be done with caution.

If the computer includes a headset or earphones and bears the "GS" mark, this combination is in compliance with EN 50332-1. For your own safety, headsets or earphones used with these products should comply with the headphone limits in EN 50332-2.

Laser safety

For products equipped with optical drives or fiber optic transceivers.

This product may be provided with an optical storage device (i.e., CD or DVD drive) and/or fiber optic transceiver. These contain lasers and are classified as Class 1 Laser Products in accordance with the standard IEC/EN 60825-1 and comply with its requirements.

Each laser product complies with US FDA Regulations of 21 CFR 1040.10 and 1040.11 or complies with those regulations except for deviations pursuant to Laser Notice No. 50, dated June 24, 2007.

WARNING! Use of controls or adjustments or performance of procedures other than those specified herein or in the laser product's installation guide may result in hazardous radiation exposure. To reduce the risk of exposure to hazardous radiation:

- Do not try to open the module enclosure. There are no user-serviceable components inside.
- Do not operate controls, make adjustments, or perform procedures to the laser device other than those specified herein.
- Allow only HP Authorized Service technicians to repair the unit.

Power supply and power cord set requirements

Power supply class I grounding requirements

For protection from fault currents, the equipment shall be connected to a grounding terminal. Plug the system power cord into an AC outlet that provides a ground connection. Substitute cords may not provide adequate fault protection. Only use the power cord supplied with this product or a Hewlett-Packard authorized replacement.

Brazil notice

Este equipamento deve ser conectado obrigatoriamente em tomada de rede de energia elétrica que possua aterramento (três pinos), conforme a norma nbr abnt 5410,visando a segurança dos usuários contra choques elétricos.

Denmark

Apparatets stikprop skal tilsluttes en stikkontakt med jord, som giver forbindelse til stikproppens jord.

Finland

Laite on liitettävä suojakoskettimilla varustettuun pistorasiaan.

Norway

Apparatet må tilkoples jordet stikkontakt.

Sweden

Apparaten skall anslutas till jordat uttag.

Power supply requirements

The power supplies on some products have external power switches. The voltage select switch feature on the product permits it to operate from any line voltage between 100-127 or 200-240 volts AC. Power supplies on

those products that do not have external power switches are equipped with internal circuits that sense the incoming voltage and automatically switch to the proper voltage.

For safety reasons, use only the AC adapter provided with the unit or an authorized replacement adapter from Hewlett-Packard. Replacement part numbers may be found at http://www.hp.com/cgi-bin/hpsupport/index.pl.

For use in Norway

This product is also designed for an IT power system with phase-to-phase voltage 230V.

Power cord set requirements

The power cord set received with the product meets the requirements for use in the country where the equipment was originally purchased. Use only the power cord provided with the unit or an authorized replacement power cord from Hewlett-Packard or an approved HP source. Replacement part numbers may be found at http://www.hp.com/cgi-bin/hpsupport/index.pl.

Power cord sets for use in other countries must meet the requirements of the country where you use the product. For more information on power cord set requirements, contact your authorized HP dealer, reseller, or service provider.

WARNING! Do not use power cords from other products.

Mismatched power cords may result in a shock and fire hazard.

The requirements listed below are applicable to all countries:

1. The power cord must be approved by an acceptable accredited agency responsible for evaluation in the country where the power cord set will be installed.
2. The length of the power cord must be between 1.8 m (6 feet) and 3.6 m (12 feet). For a power cord 2.0 m (6.56 feet) or less, the diameter of the wire must be a minimum of 0.75 mm^2 or 18AWG. If the power cord is longer than 2.0 m (6.56 feet), the diameter of the wire must be a minimum of 1.0 mm^2 or 16AWG.

The power cord should be routed so that it is not likely to be walked on or pinched by items placed upon it or against it. Particular attention should be paid to the plug, electrical outlet, and the point where the cord exits from the product.

WARNING! Do not operate this product with a damaged power cord set. If the power cord set is damaged in any manner, replace it immediately. Damaged cords may result in user exposure to hazards.

Japan power cord requirements

For use in Japan, use only the power cord received with this product.

CAUTION: Do not use the power cord received with this product on any other products.

Pinch hazard

WARNING! Observe pinch hazard areas. Keep fingers away from closing parts.

TV antenna connectors protection

External television antenna grounding

If an outside antenna or cable system is connected to the product, be sure the antenna or cable system is electrically grounded so as to provide some protection against voltage surges and built-up static charges. Article 810 of the National Electrical Code, ANSI/NFPA 70, provides information with regard to proper electrical grounding of the mast and supporting structure, grounding of the lead-in wire to an antenna-discharge unit, size of grounding conductors, location of antenna-discharge unit, connection to grounding electrodes, and requirements for the grounding electrode.

Lightning protection

For added protection of any product during a lightning storm, or when it is left unattended and unused for long periods of time, unplug the product from the wall outlet and disconnect the antenna or cable system. This will prevent damage to the product from lightning and power line surges.

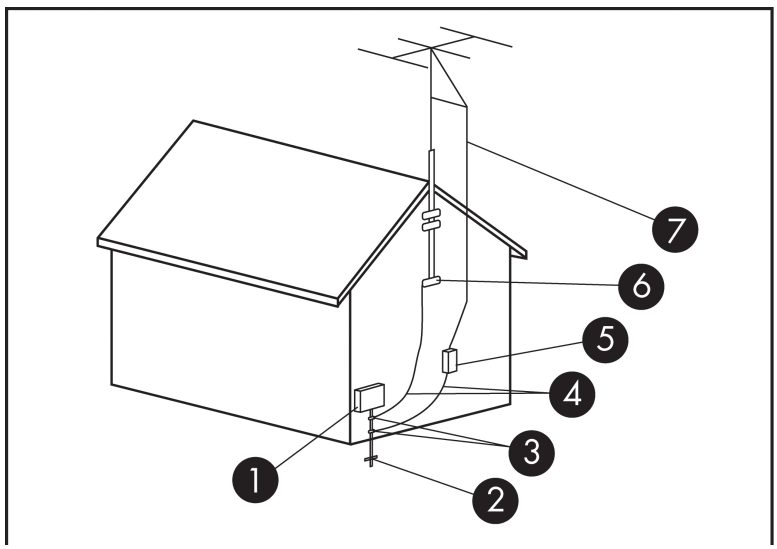

Table 4-1 Antenna Grounding

Reference	Grounding Component
1	Electric Service Equipment
2	Power Service Grounding Electrode System (NEC Art 250, Part III)
3	Ground Clamps
4	Grounding Conductors (NEC Section 810.21)
5	Antenna Discharge Unit (NEC Section 810.20)
6	Ground Clamp
7	Antenna Lead-in Wire

Note to CATV system installer

This reminder is provided to call the CATV systems installer's attention to section 820.93 of the National Electric Code, which provides guidelines for proper grounding and in particular, specify that the Coaxial cable

shield shall be connected to grounding system of the building, as close to the point of cable entry as practical.

China safety notices

HP 工作站使用安全手册

使用须知

欢迎使用惠普工作站，为了您及仪器的安全，请您务必注意如下事项：

1. 仪器要和地线相接，要使用有正确接地插头的电源线，使用中国国家规定的 220V 电源。
2. 避免高温和尘土多的地方，否则易引起仪器内部部件的损坏。
3. 避免接近高温，避免接近直接热源，如直射太阳光、暖气等其它发热体。
4. 不要有异物或液体落入机内，以免部件短路。
5. 不要将磁体放置于仪器附近。

警告

为防止火灾或触电事故，请不要将该机放置于淋雨或潮湿处

如果您按照以上步骤操作时遇到了困难，或想了解其它产品性能，请在以下网页上寻找相关信息：http://www.hp.com.cn

或联系我们

中国惠普有限公司
地址：北京朝阳区建国路 112 号中国惠普大厦
电话：010-65643888

China: Altitude notice

Altitude warning for products not certified for use in >5000 m

仅适用于海拔 2000m 以下地区安全使用

– or –

仅适用于海拔 2000 米以下地区安全使用

China: Tropical warning notice

Tropical warning for products not certified for use in tropical regions.

仅适用于非热带气候条件下安全使用

Germany acoustics notice

Sound pressure level (LpA) is far below 70dB(A) (operator position, normal operation, according to ISO 7779) Product noise emission data can be found in the product related “IT ECO Declarations” at Internet address: http://www.hp.com/go/ted

Schalldruckpegel (LpA) ist weit unterhalb 70 dB(A) (Benutzerposition, normaler Betrieb, nach ISO 7779) Die Schallemissionswerte der Produkte können in den produktbezogenen “IT ECO Declarations” auf folgender Internet Adresse gefunden werden: http://www.hp.com/go/ted

Taiwan BSMI notice

台灣 BSMI 注意事項

使用過度恐傷害視力

1. 使用 30 分鐘請休息 10 分鐘。
2. 2 歲以下幼兒不看螢幕， 2 歲以上每天看螢幕不要超過 1 小時。

5 Environmental notices for notebook computers

This chapter provides country- and region-specific environmental notices and compliance information. Some of these notices may not apply to your product.

Electronic hardware, packaging and battery recycling

HP encourages customers to recycle used electronic hardware, HP original print cartridges packaging, and rechargeable batteries. For more information about recycling programs, go to http://www.hp.com/recycle.

For information about recycling the product in Japan, refer to http://www.hp.com/jp/hardwarerecycle/.

Disposal of waste equipment by users

This symbol means do not dispose of your product with your other household waste. Instead, you should protect human health and the environment by handing over your waste equipment to a designated collection point for the recycling of waste electrical and electronic equipment. For more information, please contact your household waste disposal service or go to http://www.hp.com/recycle.

Brazil alkaline battery disposal

Não descarte o produto eletrônico em lixo comum

HEWLETT PACKARD BRASIL LTDA (HP)

AV. JOSÉ LUIZ MAZALI Nº 360 - GALPÃO B-PARTE 1-BAIRRO

RESIDENCIAL BURCK - LOUVEIRA/SP - CEP: 13290-000

CNPJ: 61.797.924/0007-40

Centro de Informações HP: (11) 4004-7751 ou 0800-7097751

Este produto eletroeletrônico e seus componentes não devem ser descartados no lixo comum, pois embora estejam em conformidade com padrões mundiais de restrição a substâncias nocivas, podem conter, ainda que em quantidades mínimas, substâncias impactantes ao meio ambiente. Ao final da vida útil deste produto, o usuário deverá entregá-lo à HP. A não observância dessa orientação sujeitará o infrator às sanções previstas em lei. Após o uso, as pilhas e/ou baterias dos produtos HP deverão ser entregues ao estabelecimento comercial ou rede de assistência técnica autorizada pela HP.

Para maiores informações , inclusive sobre os pontos de recebimento, acesse: http://www.hp.com.br/reciclar

Brazil hardware recycling information

Não descarte o produto eletrônico em lixo comum

HEWLETT PACKARD BRASIL LTDA (HP)

AV. JOSÉ LUIZ MAZALI Nº 360 - GALPÃO B-PARTE 1-BAIRRO

RESIDENCIAL BURCK - LOUVEIRA/SP - CEP: 13290-000

CNPJ: 61.797.924/0007-40

Centro de Informações HP: (11) 4004-7751 ou 0800-7097751

Este produto eletroeletrônico e seus componentes não devem ser descartados no lixo comum, pois embora estejam em conformidade com padrões mundiais de restrição a substâncias nocivas, podem conter, ainda que em quantidades mínimas, substâncias impactantes ao meio ambiente. Ao final da vida útil deste produto, o usuário deverá entregá-lo à HP. A não observância dessa orientação sujeitará o infrator às sanções previstas em lei. Após o uso, as pilhas e/ou baterias dos produtos HP deverão ser entregues ao estabelecimento comercial ou rede de assistência técnica autorizada pela HP.

Para maiores informações , inclusive sobre os pontos de recebimento, acesse: http://www.hp.com.br/reciclar

ENERGY STAR® Certification (select models only)

ENERGY STAR is a U.S. Environmental Protection Agency voluntary program that helps businesses and individuals save money and protect our climate through superior energy efficiency. Products that earn the ENERGY STAR prevent greenhouse gas emissions by meeting strict energy efficiency criteria or requirements set by the U.S. Environmental Protection Agency. As an ENERGY STAR Partner, Hewlett-Packard Company has followed the U.S. EPA's enhanced product certification process to ensure that products marked with the ENERGY STAR logo are ENERGY STAR certified per the applicable ENERGY STAR guidelines. The following logo appears on all ENERGY STAR-certified computers::

A key ENERGY STAR requirement for computer products is power management features that significantly reduce energy consumption when the product is not in use. Power management allows a computer to automatically enter a low power "sleep" mode, or other low power mode, after a defined period of inactivity. The power management features have been preset as follows when the computer is operating on AC power:

Computer type	Time to activate display sleep mode	Time to activate computer sleep mode (minutes)	Resuming from sleep mode
Notebooks, Mobile Workstations	Less than or equal to 15 minutes (varies by model)	Less than or equal to 30 minutes (varies by model)	Product will exit sleep mode when the power/sleep button is pressed. If Wake-on-Lan (WOL) is enabled, the system can resume from sleep in response to a network signal.
Tablets/Slates	Less than or equal to 1 minute	Not applicable	Not applicable

For computers that support an always-on, always-connected use profile where internet access is available (such as tablets and slates), alternative low power modes - such as Short or Long Idle modes (as defined in the ENERGY STAR Computer Program Requirements) are provided that consume very little power (</= 10

Watts) and when applicable, maximize product battery life. These alternative low power modes are dynamic, with the display sleep mode activated within 1 minute of user inactivity.

The computer exits Sleep when the power/Sleep button is pressed. When the Wake On LAN (WOL) feature is enabled, the computer can also exit Sleep in response to a network signal.

Additional information on the potential energy and financial savings of the power management feature can be found on the EPA ENERGY STAR Power Management Web site at http://www.energystar.gov/powermanagement.

Additional information on the ENERGY STAR program and its environmental benefits are available on the EPA ENERGY STAR Web site at http://www.energystar.gov.

ENERGY STAR and the ENERGY STAR mark are registered trademarks owned by the U.S. Environmental Protection Agency.

Chemical substances

HP is committed to providing our customers with information about the chemical substances in our products as needed to comply with legal requirements such as REACH (Regulation EC No 1907/2006 of the European Parliament and the Council). A chemical information report for this product can be found at http://www.hp.com/go/reach.

China environmental notices

微型计算机电源声明书

能耗信息说明

惠普公司对笔记本电脑提供能耗信息说明，更多信息请登陆

http://www.hp.com/hpinfo/globalcitizenship/environment/productdata/chinasepa.html

回收信息说明

惠普公司对废弃的电子计算机（笔记本电脑）提供回收服务，更多信息请登陆

http://www.hp.com.cn/hardwarerecycle

环境标志信息:

微型计算机(台式计算机, 笔记本电脑等)在中国环境标志认证产品范围内 ,环境标志表明该产品不仅品质合格,而且在生产,使用和处理过程中都符合特定的环境保护要求,与同类产品相比,具有低毒少害,节约资源等环境优势,在国家环保部网站 (http://www.sepa.gov.cn)可以浏览环境标志的信息,此外获得中国环境标志认证的产品售出后 3 年内均可在各服务中心选择维修或更换部件， 也可通过更换更高性能的零部件或模块实现硬件升级

特别提醒:

如您需要确认本产品处于零能耗状态， 请按下电源关闭按钮， 并将插头从电源插座断开。

China PC energy label

In accordance with “The Regulation of the Implementation on China Energy Label for Microcomputers” (CEL-30), this microcomputer has an Energy Efficiency Label. The energy efficiency grade, TEC (Typical Energy Consumption), and product category presented on the label are determined and calculated according to the standard GB28380-2012.

1. Energy Efficiency Grades

The grade is determined by the standard with the calculation of base consumption level with the sum of all the allowances for additional components such as main memory and graphics card. For products of any grade, the TEC should not exceed the value specified in the following table:

Product Type		**TEC (kilowatt hour)**		
		Grade 1	Grade 2	Grade 3
Desktop microcomputer, AIO	Category A	98.0+∑Efa	148.0+∑Efa	198.0+∑Efa
	Category B	125.0+∑Efa	175.0+∑Efa	225.0+∑Efa
	Category C	159.0+∑Efa	209.0+∑Efa	259.0+∑Efa
	Category D	184.0+∑Efa	234.0+∑Efa	284.0+∑Efa
Portable Computer	Category A	20.0+∑Efa	35.0+∑Efa	45.0+∑Efa
	Category B	26.0+∑Efa	45.0+∑Efa	65.0+∑Efa
	Category C	54.5+∑Efa	75.0+∑Efa	123.5+∑Efa

NOTE: ∑Efa is the sum of power factor of product additional functions.

2. Typical Energy Consumption

The energy consumption figure presented on the label is the data measured with the representative configuration that covers all the configurations in the registration unit which is selected according to CEL-30. Thus, actual energy consumption of this specific microcomputer may not be the same as the TEC data presented in the label.

3. Product Category

The product category is determined by the standard according to the microcomputer's configuration. The categorization of products complies with the regulations in the following table:

Product Type	**Configuration Description**	
	Desktop microcomputer, AIO	Portable Computer
Category A	The desktop microcomputer and AIO whose configuration is out of the scope of Category B, C, and D	The portable computer whose configuration is out of the scope of Category B and C
Category B	CPU physical core number of 2, and system memory of not less than 2GB	A Discrete GPU
Category C	CPU physical core number of over 2, with at least one of the following features: **1.** System memory of not less than 2 GB **2.** A Discrete GPU	The product that has a CPU physical core number of not less than 2, system memory of not less than 2GB, A Discrete GPU with Frame Buffer Width not less than 128-bit.
Category D	CPU physical core number of not less than 4, with at least one of the following features: **1.** System memory of not less than 4 GB **2.** A Discrete GPU with Frame Buffer Width not less than 128-bit	

For more details on the specification, please refer to the standard GB28380-2012.

本机根据《微型计算机能源效率标识实施规则》（CEL-30）的要求加施中国能效标识。能效标识中显示的能效等级、典型能源消耗和产品类型均根据《微型计算机能效限定值及能效等级》（GB28380-2012）的要求确定。对上述标识内容的说明如下:

1. 能效等级

   微型计算机的能效等级由基础能源消耗值和附加功能功耗因子之和决定。微型计算机能效各等级的典型能源消耗应不大于下表的规定

微型计算机类型			能源消耗 (千瓦时)		
			1	2	3
	台式微型计算机及	A 类	98.0+ΣEfa	148.0+ΣEfa	198.0+ΣEfa
一体机		B 类	125.0+ΣEfa	175.0+ΣEfa	225.0+ΣEfa
		C 类	159.0+ΣEfa	209.0+ΣEfa	259.0+ΣEfa
		D 类	184.0+ΣEfa	234.0+ΣEfa	284.0+ΣEfa
	便携式	A 类	20.0+ΣEfa	35.0+ΣEfa	45.0+ΣEfa
计算机		B 类	26.0+ΣEfa	45.0+ΣEfa	65.0+ΣEfa
		C 类	54.5+ΣEfa	75.0+ΣEfa	123.5+ΣEfa
注：ΣEfa 为微型计算机附加功能功耗因子之和					

2. 典型能源消耗

   典型能源消耗值代表一个备案单元中，符合《微型计算机能源效率标识实施规则》要求的代表性规格型号产品的数值。因此，本机的典型能源消耗值可能与其所加施的能效标识中所示的典型能源消耗值不一致。

3. 产品类型

   产品类型根据微型计算机的配置确定。参见下表：

类型	配置说明	
	台式微型计算机及一体机	便携式计算机
A 类	下列 B 类、C 类、D 类配置以外的台式微型计算机及一体机	下列 B 类、C 类配置以外的便携式计算机
B 类	中央处理器（CPU）物理核心数为 2，系统内存大于等于 2GB	具有独立图形显示单元（GPU）
C 类	中央处理器（CPU）物理核心数大于 2，且至少具有以下特征中的一条 a. a）系统内存大于等于 2GB； b. 独立图形显示单元（GPU)	中央处理器（CPU）物理核心数大于等于 2，系统内存大于等于 2GB，具有独立图形显示单元（GPU）且显存位宽大于等于 128 位.
D 类	中央处理器（CPU）物理核心数大于等于 4，且至少具有以下特征中的一条： a. 系统内存大于等于 4GB； b. 具有独立图形显示单元（GPU）且显存位宽大于等于 128 位	

关于标识内容的更详细技术信息，请参考《微型计算机能效限定值及能效等级》（GB28380-2012）

China restriction of hazardous substances (RoHS)

The Table of Hazardous Substances/Elements and their Content

As required by China's Management Methods for Controlling Pollution by Electronic Information Products

	Hazardous Substances and Elements					
Part Name	**Lead (Pb)**	**Mercury (Hg)**	**Cadmium (Cd)**	**Hexavalent Chromium (Cr(VI))**	**Polybrominated biphenyls (PBB)**	**Polybrominated diphenyl ethers (PBDE)**
Battery	X	0	0	0	0	0
Cables	X	0	0	0	0	0
Camera	X	0	0	0	0	0
Chassis/Other	X	0	0	0	0	0
Flash memory card reader	X	0	0	0	0	0
Floppy disk drive	X	0	0	0	0	0
Hard disk drive	X	0	0	0	0	0
Headphones	X	0	0	0	0	0
I/O PCAs	X	0	0	0	0	0
Keyboard	X	0	0	0	0	0
Liquid crystal display (LCD) panel	X	0	0	0	0	0
Media (CD/DVD/floppy)	0	0	0	0	0	0
Memory	X	0	0	0	0	0
Motherboard, processor, heat sinks	X	0	0	0	0	0
Mouse	X	0	0	0	0	0
Optical disk drive	X	0	0	0	0	0
Optional docking device	X	0	0	0	0	0
Power adapter	X	0	0	0	0	0
Power supply	X	0	0	0	0	0
Remote control	X	0	0	0	0	0
Smart card/Java™ card reader	X	0	0	0	0	0
Speakers, external	X	0	0	0	0	0
TV tuner	X	0	0	0	0	0

	Hazardous Substances and Elements					
Part Name	**Lead (Pb)**	**Mercury (Hg)**	**Cadmium (Cd)**	**Hexavalent Chromium (Cr(VI))**	**Polybrominated biphenyls (PBB)**	**Polybrominated diphenyl ethers (PBDE)**
USB flash memory drive	X	0	0	0	0	0
USB hub	X	0	0	0	0	0
Web camera	X	0	0	0	0	0
Wireless receiver	X	0	0	0	0	0
Wireless cards	X	0	0	0	0	0

This form has been prepared in compliance with the provisions of SJ/T 11364.

0: Indicates that the content of said hazardous substance in all of the homogenous materials in the component is within the limits required by GB/T 26572.

X: Indicates that the content of said hazardous substance exceeds the limits required by GB/T 26572 in at least one homogenous material in the component.

All parts named in this table with an “X” are in compliance with the European Union’s RoHS Legislation.

NOTE: The referenced Environmental Protection Use Period Marking was determined according to normal operating use conditions of the product such as temperature and humidity.

产品中有毒有害物质或元素的名称及含量

根据中国《电子信息产品污染控制管理办法》

	有毒有害物质和元素					
部件名	**铅 (Pb)**	**汞 (Hg)**	**镉 (Cd)**	**六价铬(Cr(VI))**	**多溴化联苯 (PBB)**	**多溴二苯醚(PBDE)**
电池	X	0	0	0	0	0
电缆	X	0	0	0	0	0
照相机	X	0	0	0	0	0
机箱/其他	X	0	0	0	0	0
闪存读卡器	X	0	0	0	0	0
软盘驱动器	X	0	0	0	0	0
硬盘驱动器	X	0	0	0	0	0
耳机	X	0	0	0	0	0
I/O PCA	X	0	0	0	0	0
键盘	X	0	0	0	0	0
液晶显示器 (LCD) 面板	X	0	0	0	0	0
介质 （CD/DVD/软盘）	0	0	0	0	0	0
内存	X	0	0	0	0	0
主板、处理器和散热器	X	0	0	0	0	0

	有毒有害物质和元素					
部件名	铅 (Pb)	汞 (Hg)	镉 (Cd)	六价铬(Cr(VI))	多溴化联苯 (PBB)	多溴二苯醚(PBDE)
鼠标	X	0	0	0	0	0
光盘驱动器	X	0	0	0	0	0
对接设备选件	X	0	0	0	0	0
电源适配器	X	0	0	0	0	0
电源	X	0	0	0	0	0
遥控器	X	0	0	0	0	0
智能卡/Java™ 卡读卡器	X	0	0	0	0	0
外接扬声器	X	0	0	0	0	0
电视调谐器	X	0	0	0	0	0
USB 闪存盘	X	0	0	0	0	0
USB 集线器	X	0	0	0	0	0
网络摄像头	X	0	0	0	0	0
无线接收设备	X	0	0	0	0	0
无线网卡	X	0	0	0	0	0

本表格依据 SJ/T 11364 的规定编制。

0: 表示该有害物质在该部件所有均质材料中的含量均在 GB/T 26572 规定的限量要求以下。

X：表示该有害物质至少在该部件的某一均质材料中的含量超出 GB/T 26572 规定的限量要求。

此表中所有名称中含 “X” 的部件均符合欧盟 RoHS 立法。

注：环保使用期限的参考标识取决于产品正常工作的温度和湿度等条件

India restriction of hazardous substances (RoHS)

This product complies with the “India E-waste (Management and Handling) Rule 2011” and prohibits use of lead, mercury, hexavalent chromium, polybrominated biphenyls or polybrominated diphenyl ethers in concentrations exceeding 0.1 weight % and 0.01 weight % for cadmium, except for the exemptions set in Schedule 2 of the Rule.

Japan restriction of hazardous substances (RoHS)

2008 年、日本における製品含有表示方法、JISC0950 が公示されました。製造事業者は、2006 年 7 月 1 日 以降に販売される電気・電子機器の特定化学物質の含有に付きまして情報提供を義務付けられました。製品の部材表示に付きましては、

http://www.hp.com/go/jisc0950 を参照してください

A Japanese regulatory requirement, defined by specification JIS C 0950, 2008, mandates that manufacturers provide Material Content Declarations for certain categories of electronic products offered for sale after July 1, 2006.

To view the JIS C 0950 material declaration for this product, visit http://www.hp.com/go/jisc0950.

Mexico Sustainable Energy Use Law

This product has been labeled in compliance with the Mexico Sustainable Energy Use Law requiring disclosure of power consumption in the normal use (idle mode) and standby modes. Your product is one of many configurations in this model family; the idle mode power consumption of your specific configuration may vary from the information on the label. Actual power consumption of your product may be higher or lower than the value reported on the Mexico product energy label due to factors such as configuration (components and modules chosen) and usage (tasks being performed, software installed and running, etc.).

Turkey EEE regulation

Türkiye Cumhuriyeti: EEE Yönetmeliğine Uygundur

Ukraine restriction of hazardous substances (RoHS)

The equipment complies with requirements of the Technical Regulation, approved by the Resolution of Cabinet of Ministry of Ukraine as of December 3, 2008 № 1057, in terms of restrictions for the use of certain dangerous substances in electrical and electronic equipment.

Україна обмеження на наявність небезпечних речовин

Обладнання відповідає вимогам Технічного регламенту щодо обмеження використання деяких небезпечних речовин в електричному та електронному обладнані, затвердженого постановою Кабінету Міністрів України від 3 грудня 2008 № 1057.

Perchlorate material—special handling may apply

See http://www.dtsc.ca.gov/hazardouswaste/perchlorate.

This product’s real-time clock battery or coin cell battery may contain perchlorate and may require special handling when recycled or disposed of in California.

6 Environmental notices for desktops, thin clients and personal workstations

This chapter provides country- and region-specific environmental notices and compliance information. Some of these notices may not apply to your product.

Electronic hardware, packaging and battery recycling

HP encourages customers to recycle used electronic hardware, HP original print cartridges packaging, and rechargeable batteries. For more information about recycling programs, go to http://www.hp.com/recycle.

For information about recycling the product in Japan, refer to http://www.hp.com/jp/hardwarerecycle/.

Disposal of waste equipment by users

This symbol means do not dispose of your product with your other household waste. Instead, you should protect human health and the environment by handing over your waste equipment to a designated collection point for the recycling of waste electrical and electronic equipment. For more information, please contact your household waste disposal service or go to http://www.hp.com/recycle.

Brazil alkaline battery disposal

Não descarte o produto eletrônico em lixo comum

HEWLETT PACKARD BRASIL LTDA (HP)

AV. JOSÉ LUIZ MAZALI Nº 360 - GALPÃO B-PARTE 1-BAIRRO

RESIDENCIAL BURCK - LOUVEIRA/SP - CEP: 13290-000

CNPJ: 61.797.924/0007-40

Centro de Informações HP: (11) 4004-7751 ou 0800-7097751

Este produto eletroeletrônico e seus componentes não devem ser descartados no lixo comum, pois embora estejam em conformidade com padrões mundiais de restrição a substâncias nocivas, podem conter, ainda que em quantidades mínimas, substâncias impactantes ao meio ambiente. Ao final da vida útil deste produto, o usuário deverá entregá-lo à HP. A não observância dessa orientação sujeitará o infrator às sanções previstas em lei. Após o uso, as pilhas e/ou baterias dos produtos HP deverão ser entregues ao estabelecimento comercial ou rede de assistência técnica autorizada pela HP.

Para maiores informações , inclusive sobre os pontos de recebimento, acesse: http://www.hp.com.br/reciclar

Brazil hardware recycling information

Não descarte o produto eletrônico em lixo comum

HEWLETT PACKARD BRASIL LTDA (HP)

AV. JOSÉ LUIZ MAZALI Nº 360 - GALPÃO B-PARTE 1-BAIRRO

RESIDENCIAL BURCK - LOUVEIRA/SP - CEP: 13290-000

CNPJ: 61.797.924/0007-40

Centro de Informações HP: (11) 4004-7751 ou 0800-7097751

Este produto eletroeletrônico e seus componentes não devem ser descartados no lixo comum, pois embora estejam em conformidade com padrões mundiais de restrição a substâncias nocivas, podem conter, ainda que em quantidades mínimas, substâncias impactantes ao meio ambiente. Ao final da vida útil deste produto, o usuário deverá entregá-lo à HP. A não observância dessa orientação sujeitará o infrator às sanções previstas em lei. Após o uso, as pilhas e/ou baterias dos produtos HP deverão ser entregues ao estabelecimento comercial ou rede de assistência técnica autorizada pela HP.

Para maiores informações , inclusive sobre os pontos de recebimento, acesse: http://www.hp.com.br/reciclar

ENERGY STAR® Certification (select models only)

ENERGY STAR is a U.S. Environmental Protection Agency voluntary program that helps businesses and individuals save money and protect our climate through superior energy efficiency. Products that earn the ENERGY STAR prevent greenhouse gas emissions by meeting strict energy efficiency criteria or requirements set by the U.S. Environmental Protection Agency. As an ENERGY STAR Partner, Hewlett-Packard Company has followed the U.S. EPA's enhanced product certification process to ensure that products marked with the ENERGY STAR logo are ENERGY STAR certified per the applicable ENERGY STAR guidelines. The following logo appears on all ENERGY STAR-certified computers::

A key ENERGY STAR requirement for computer products is power management features that significantly reduce energy consumption when the product is not in use. Power management allows a computer to automatically enter a low power "sleep" mode, or other low power mode, after a defined period of inactivity. The power management features have been preset as follows when the computer is operating on AC power:

Computer type	Time to activate display sleep mode	Time to activate computer sleep mode (minutes)	Resuming from sleep mode
Desktops, Integrated Desktops, Workstations	Less than or equal to 15 minutes (varies by model)	Less than or equal to 30 minutes (varies by model)	Product will exit sleep mode when user interacts with any input device, including the mouse or keyboard. If Wake-on-Lan (WOL) is enabled, the system can resume from sleep in response to a network signal.
Thin clients	Less than or equal to 15 minutes (varies by model)	Less than or equal to 30 minutes when sleep mode is supported by the operating system (varies by model)	When sleep mode is supported by operating system product will exit sleep mode when user interacts with any input device, including the mouse or keyboard.

Computer type	Time to activate display sleep mode	Time to activate computer sleep mode (minutes)	Resuming from sleep mode
			If Wake-on-Lan (WOL) is enabled, the system can resume from sleep in response to a network signal.

The computer exits Sleep when the power/Sleep button is pressed. When the Wake On LAN (WOL) feature is enabled, the computer can also exit Sleep in response to a network signal.

Additional information on the potential energy and financial savings of the power management feature can be found on the EPA ENERGY STAR Power Management Web site at http://www.energystar.gov/powermanagement.

Additional information on the ENERGY STAR program and its environmental benefits are available on the EPA ENERGY STAR Web site at http://www.energystar.gov.

ENERGY STAR and the ENERGY STAR mark are registered trademarks owned by the U.S. Environmental Protection Agency.

Chemical substances

HP is committed to providing our customers with information about the chemical substances in our products as needed to comply with legal requirements such as REACH (Regulation EC No. 1907/2006 of the European Parliament and the Council). A chemical information report for this product can be found at http://www.hp.com/go/reach.

Mercury statement

This statement applies to All-in-One computers with built-in display panels that do not use LED backlighting.

This HP product may contain the following material that might require special handling at end-of-life:

- Mercury in the fluorescent lamp in the display LCD

Disposal of mercury can be regulated because of environmental considerations. For disposal or recycling information, please contact your local authorities or the Electronic Industries Alliance (EIA) (http://www.eiae.org).

Perchlorate material–special handling may apply

The computer's real-time clock battery may contain perchlorate and may require special handling when recycled or disposed of in California. See http://www.dtsc.ca.gov/hazardouswaste/perchlorate/.

China environmental notices

微型计算机电源声明书

能耗信息说明

惠普公司对笔记本电脑提供能耗信息说明，更多信息请登陆

http://www.hp.com/hpinfo/globalcitizenship/environment/productdata/chinasepa.html

回收信息说明

惠普公司对废弃的电子计算机（笔记本电脑）提供回收服务，更多信息请登陆

http://www.hp.com.cn/hardwarerecycle

环境标志信息:

微型计算机(台式计算机, 笔记本电脑等)在中国环境标志认证产品范围内 ,环境标志表明该产品不仅品质合格,而且在生产,使用和处理过程中都符合特定的环境保护要求,与同类产品相比,具有低毒少害,节约资源等环境优势,在国家环保部网站 (http://www.sepa.gov.cn)可以浏览环境标志的信息,此外获得中国环境标志认证的产品售出后 3 年内均可在各服务中心选择维修或更换部件， 也可通过更换更高性能的零部件或模块实现硬件升级

特别提醒:

如您需要确认本产品处于零能耗状态， 请按下电源关闭按钮， 并将插头从电源插座断开。

China PC energy label

In accordance with “The Regulation of the Implementation on China Energy Label for Microcomputers” (CEL-30), this microcomputer has an Energy Efficiency Label. The energy efficiency grade, TEC (Typical Energy Consumption), and product category presented on the label are determined and calculated according to the standard GB28380-2012.

1. Energy Efficiency Grades

   The grade is determined by the standard with the calculation of base consumption level with the sum of all the allowances for additional components such as main memory and graphics card. For products of any grade, the TEC should not exceed the value specified in the following table:

Product Type		**TEC (kilowatt hour)**		
		Grade 1	Grade 2	Grade 3
Desktop microcomputer, AIO	Category A	98.0+∑Efa	148.0+∑Efa	198.0+∑Efa
	Category B	125.0+∑Efa	175.0+∑Efa	225.0+∑Efa
	Category C	159.0+∑Efa	209.0+∑Efa	259.0+∑Efa
	Category D	184.0+∑Efa	234.0+∑Efa	284.0+∑Efa
Portable Computer	Category A	20.0+∑Efa	35.0+∑Efa	45.0+∑Efa
	Category B	26.0+∑Efa	45.0+∑Efa	65.0+∑Efa
	Category C	54.5+∑Efa	75.0+∑Efa	123.5+∑Efa

NOTE: ∑Efa is the sum of power factor of product additional functions.

2. Typical Energy Consumption

   The energy consumption figure presented on the label is the data measured with the representative configuration that covers all the configurations in the registration unit which is selected according to CEL-30. Thus, actual energy consumption of this specific microcomputer may not be the same as the TEC data presented in the label.

3. Product Category

   The product category is determined by the standard according to the microcomputer’s configuration. The categorization of products complies with the regulations in the following table:

Product Type	Configuration Description	
	Desktop microcomputer, AIO	Portable Computer
Category A	The desktop microcomputer and AIO whose configuration is out of the scope of Category B, C, and D	The portable computer whose configuration is out of the scope of Category B and C
Category B	CPU physical core number of 2, and system memory of not less than 2GB	A Discrete GPU
Category C	CPU physical core number of over 2, with at least one of the following features: **1.** System memory of not less than 2 GB **2.** A Discrete GPU	The product that has a CPU physical core number of not less than 2, system memory of not less than 2GB, A Discrete GPU with Frame Buffer Width not less than 128-bit.
Category D	CPU physical core number of not less than 4, with at least one of the following features: **1.** System memory of not less than 4 GB **2.** A Discrete GPU with Frame Buffer Width not less than 128-bit	

For more details on the specification, please refer to the standard GB28380-2012.

本机根据《微型计算机能源效率标识实施规则》（CEL-30）的要求加施中国能效标识。能效标识中显示的能效等级、典型能源消耗和产品类型均根据《微型计算机能效限定值及能效等级》（GB28380-2012）的要求确定。对上述标识内容的说明如下:

1. 能效等级

   微型计算机的能效等级由基础能源消耗值和附加功能功耗因子之和决定。微型计算机能效各等级的典型能源消耗应不大于下表的规定

微型计算机类型			能源消耗（千瓦时）		
			1	2	3
	台式微型计算机及	A 类	98.0+∑Efa	148.0+∑Efa	198.0+∑Efa
一体机		B 类	125.0+∑Efa	175.0+∑Efa	225.0+∑Efa
		C 类	159.0+∑Efa	209.0+∑Efa	259.0+∑Efa
		D 类	184.0+∑Efa	234.0+∑Efa	284.0+∑Efa
	便携式	A 类	20.0+∑Efa	35.0+∑Efa	45.0+∑Efa
计算机		B 类	26.0+∑Efa	45.0+∑Efa	65.0+∑Efa
		C 类	54.5+∑Efa	75.0+∑Efa	123.5+∑Efa
注：∑Efa 为微型计算机附加功能功耗因子之和					

2. 典型能源消耗

   典型能源消耗值代表一个备案单元中，符合《微型计算机能源效率标识实施规则》要求的代表性规格型号产品的数值。因此，本机的典型能源消耗值可能与其所加施的能效标识中所示的典型能源消耗值不一致。

3. 产品类型

产品类型根据微型计算机的配置确定。参见下表：

类型	配置说明	
	台式微型计算机及一体机	便携式计算机
A 类	下列 B 类、C 类、D 类配置以外的台式微型计算机及一体机	下列 B 类、C 类配置以外的便携式计算机
B 类	中央处理器（CPU）物理核心数为 2，系统内存大于等于 2GB	具有独立图形显示单元（GPU）
C 类	中央处理器（CPU）物理核心数大于 2，且至少具有以下特征中的一条 **a.** a）系统内存大于等于 2GB； **b.** 独立图形显示单元（GPU)	中央处理器（CPU）物理核心数大于等于 2，系统内存大于等于 2GB，具有独立图形显示单元（GPU）且显存位宽大于等于 128 位.
D 类	中央处理器（CPU）物理核心数大于等于 4，且至少具有以下特征中的一条： **a.** 系统内存大于等于 4GB； **b.** 具有独立图形显示单元（GPU）且显存位宽大于等于 128 位	

关于标识内容的更详细技术信息，请参考《微型计算机能效限定值及能效等级》（GB28380-2012）

China restriction of hazardous substances (RoHS)

As required by China's Management Methods for Controlling Pollution by Electronic Information Products

Hazardous Substances and Elements

Part Name	Lead (Pb)	Mercury (Hg)	Cadmium (Cd)	Hexavalent Chromium (Cr(VI))	Polybromi-nated biphenyls (PBB)	Polybromi-nated diphenyl ethers (PBDE)
Motherboard, processor and heat sink	X	O	O	O	O	O
Memory	X	O	O	O	O	O
I/O PCAs	X	O	O	O	O	O
Power supply	X	O	O	O	O	O
Keyboard	X	O	O	O	O	O
Mouse	X	O	O	O	O	O
Chassis/Other	X	O	O	O	O	O
Fans	X	O	O	O	O	O
Internal/External Media Reading Devices	X	O	O	O	O	O
External Control Devices	X	O	O	O	O	O
Cable	X	O	O	O	O	O
Hard Disk Drive	X	O	O	O	O	O
Display	X	X	O	O	O	O

This form has been prepared in compliance with the provisions of SJ/T 11364.

O: Indicates that the content of said hazardous substance in all of the homogenous materials in the component is within the limits required by GB/T 26572.

X: Indicates that the content of said hazardous substance exceeds the limits required by GB/T 26572 in at least one homogenous material in the component.

All parts named in this table with an “X” are in compliance with the European Union’s RoHS Legislation.

NOTE: The referenced Environmental Protection Use Period Marking was determined according to normal operating use conditions of the product such as temperature and humidity.

The Table of Hazardous Substances/Elements and their Content

产品中有害物质或元素的名称及含量

根据中国《电子信息产品污染控制管理办法》

部件名称	有毒有害物质或元素					
	铅 (Pb)	汞 (Hg)	镉 (Cd)	六价铬 (Cr(VI))	多溴联苯 (PBB)	多溴二苯醚 (PBDE)
主板 处理器和 散热器	X	0	0	0	0	0
内存条	X	0	0	0	0	0
I/O PCAs	X	0	0	0	0	0
电源	X	0	0	0	0	0
键盘	X	0	0	0	0	0
鼠标	X	0	0	0	0	0
机箱/其他	X	0	0	0	0	0
风扇	X	0	0	0	0	0
内部/外部媒体阅读设备	X	0	0	0	0	0
外部控制设备	X	0	0	0	0	0
电缆	X	0	0	0	0	0
硬盘驱动器	X	0	0	0	0	0
显示屏	X	X	0	0	0	0

本表格依据 SJ/T 11364 的规定编制。

0：表示该有害物质在该部件所有均质材料中的含量均在 GB/T 26572 规定的限量要求以下。

X：表示该有害物质至少在该部件的某一均质材料中的含量超出 GB/T 26572 规定的限量要求。

此表中所有名称中含 “X” 的部件均符合欧盟 RoHS 立法。

注：环保使用期限的参考标识取决于产品正常工作的温度和湿度等条件

India restriction of hazardous substances (RoHS)

This product complies with the “India E-waste (Management and Handling) Rule 2011” and prohibits use of lead, mercury, hexavalent chromium, polybrominated biphenyls or polybrominated diphenyl ethers in concentrations exceeding 0.1 weight % and 0.01 weight % for cadmium, except for the exemptions set in Schedule 2 of the Rule.

IT ECO declarations

Desktop PCs and Thin Clients

http://www.hp.com/hpinfo/globalcitizenship/environment/productdata/itecodesktop-pc.html?jumpid=reg_R1002_USEN

Workstations

http://www.hp.com/hpinfo/globalcitizenship/environment/productdata/itecoworkstatio.html

Japan restriction of hazardous substances (RoHS)

2008 年、日本における製品含有表示方法、JISC0950 が公示されました。製造事業者は、2006 年 7 月 1 日 以降に販売される電気・電子機器の特定化学物質の含有に付きまして情報提供を義務付けられました。製品の部材表示に付きましては、

http://www.hp.com/go/jisc0950 を参照してください

A Japanese regulatory requirement, defined by specification JIS C 0950, 2008, mandates that manufacturers provide Material Content Declarations for certain categories of electronic products offered for sale after July 1, 2006.

To view the JIS C 0950 material declaration for this product, visit http://www.hp.com/go/jisc0950.

Ley para el Aprovechamiento Sustentable de la Energía de México (Mexico Sustainable Energy Use Law)

Se ha etiquetado este producto en conformidad con la Ley para el Aprovechamiento Sustentable de la Energía de México, que requiere la divulgación del consumo de energía del modo de uso normal (modo inactivo) y del modo de espera. Su producto es una de las muchas configuraciones de esta familia de modelos; el consumo de energía del modo inactivo de su configuración específica puede diferir de la información de la etiqueta. El consumo real de energía de su producto puede ser mayor o menor que el valor informado en la etiqueta de energía de producto para México a causa de factores como la configuración (componentes y módulos seleccionados) y el uso (tareas que se están efectuando, software instalado y en ejecución, etc.).

NOTE: Esta ley no es aplicable a los workstations.

This product has been labeled in compliance with the Mexico Sustainable Energy Use Law requiring disclosure of power consumption in the normal use (idle mode) and standby modes. Your product is one of many configurations in this model family; the idle mode power consumption of your specific configuration may vary from the information on the label. Actual power consumption of your product may be higher or lower than the value reported on the Mexico product energy label due to factors such as configuration (components and modules chosen) and usage (tasks being performed, software installed and running, etc.).

NOTE: Workstations are not labeled because the law is not applicable to the workstation product category.

Turkey EEE regulation

Türkiye Cumhuriyeti: EEE Yönetmeliğine Uygundur

Україна обмеження на наявність небезпечних речовин (Ukraine restriction of hazardous substances (RoHS))

Обладнання відповідає вимогам Технічного регламенту щодо обмеження використання деяких небезпечних речовин в електричному та електронному обладнанні, затвердженого постановою Кабінету Міністрів України від 3 грудня 2008 № 1057.

The equipment complies with requirements of the Technical Regulation, approved by the Resolution of Cabinet of Ministry of Ukraine as of December 3, 2008 № 1057, in terms of restrictions for the use of certain dangerous substances in electrical and electronic equipment.

TCO Certified Edge Certification

This section applies only to products bearing the TCO Certified Edge logo.

TCO DEVELOPMENT

Congratulations!

This product is TCO Certified – for Sustainable IT

TCO Certified is an international third party sustainability certification for IT products. TCO Certified ensures that the manufacture, use and recycling of IT products reflect environmental, social and economic responsibility. Every TCO Certified product model is verified by an accredited independent test laboratory.

Along with meeting all requirements in TCO Certified, this product also meets the exclusive TCO Certified Edge certification, recognizing best in class products in a specific sustainability attribute.

Summary of TCO Certified Criteria:

Corporate Social Responsibility
Socially responsible production - working conditions and labor law in manufacturing country
Energy Efficiency
Energy efficiency of product and power supply. Energy Star compliant, where applicable
Environmental Management System
Manufacturer must be certified according to either ISO 14001 or EMAS
Minimization of Hazardous Substances
Limits on cadmium, mercury, lead & hexavalent chromium including requirements for mercury-free products, halogenated substances and hazardous flame retardants
Design for Recycling
Coding of plastics for easy recycling. Limit on the number of different plastics used.
Product Lifetime, Product Take Back
Minimum one-year product warranty. Minimum three-year availability of spare parts. Product takeback
Packaging
Limits on hazardous substances in product packaging. Packaging prepared for recycling
Ergonomic, User-centered design
Visual ergonomics in products with a display. Adjustability for user comfort (displays, headsets)
Acoustic performance – protection against sound spikes (headsets) and fan noise (projectors, computers)
Ergonomically designed keyboard (notebooks)
Electrical Safety, minimal electro-magnetic Emissions
Third Party Testing
All certified product models have been tested in an independent, accredited laboratory.

A detailed criteria set is available for download at www.tcodevelopment.com, where you can also find a searchable database of all TCO Certified IT products.

TCO Development, the organization behind TCO Certified, has been an international driver in the field of Sustainable IT for 20 years. Criteria in TCO Certified are developed in collaboration with scientists, experts, users and manufacturers. Organizations around the world rely on TCO Certified as a tool to help them reach their sustainable IT goals. We are owned by TCO, a non-profit organization representing office workers. TCO Development is headquartered in Stockholm, Sweden, with regional presence in North America and Asia.

For more information, please visit
www.tcodevelopment.com

Index

A
airline travel notice 8
altitude notice 25, 31

B
battery notice 8, 23, 41
battery recycling 33
Brazil notice 3

C
cable grounding notice 25
Canada modem statement 12
Canada notices 4
China environmental notices 35, 44
China PC energy label 35, 45
China restriction of hazardous substances notice 38, 48

D
Declaration of Conformity
  notebook computers 3
disposal notices
  battery 41
  battery, user replacement 8
  equipment 33
  factory sealed battery 8

E
electronic hardware and battery recycling 33
ENERGY STAR certification 34, 43
environmental notices 33
equipment disposal notice 33
ergonomics notice 5, 20
European Union notices 4, 19

F
Federal Communications Commission
  desktops, thin clients and workstations notice 17
  desktops, thin clients, workstations cables 17
  desktops, thin clients, workstations modifications 17
  notebook computers cables 2
  notebook computers modifications 2
  notebook computers notice 2

G
GS Notice 5, 20

H
headset and earphone volume level notice 24

I
India restriction of hazardous substances notice 41, 50

J
Japan modem statement 12
Japan notice 6
Japan power cord notice 13
Japan restriction of hazardous substances notice 41, 50

K
keyboard notice 24

L
labels, regulatory 1
laser safety notice 9

M
Macrovision Corporation notice 13
Mexico Sustainable Energy Use Law 41
Mexico wireless notice 6
modem notices 9
modem statements
  Canada 12
  Japan 12
  New Zealand 12
  U.S. 10
modifications, desktops, thin clients, workstations
  Federal Communications Commission 17
modifications, notebook computers
  Federal Communications Commission 2

N
New Zealand modem statement 12
notices
  airline travel 8
  battery 8, 41
  battery, user replacement 23
  Brazil 3
  Canada 4
  China restriction of hazardous substances 38, 48
  environmental 33
  equipment disposal 33
  ergonomics 5, 20
  European Union 4, 19
  headset and earphone volume level 24
  India restriction of hazardous substances 41, 50
  Japan 6
  Japan power cord 13
  Japan restriction of hazardous substances 41, 50
  keyboard 24
  laser safety 9
  Macrovision Corporation 13
  Mexico 6
  modem 9
  perchlorate material 41
  power cords 13, 24
  Singapore 7
  South Korea 6
  Taiwan 7, 21
  Thailand WWAN wireless notice 7
  travel 24
  Ukraine restriction of hazardous substances 41, 51
notices, desktops, thin clients and workstations
  Federal Communications Commission 17

notices, notebook computers
Federal Communications
Commission 2

P

power cord notice 13, 24

R

recycling, electronic hardware and
battery 33

S

Singapore wireless notice 7
South Korea notice 6

T

Taiwan notice 7, 21
TCO Certified Edge Certification 51
Thailand WWAN wireless notice 7
travel notice 24
tropical warning notice 25, 31
TV tuner, cable grounding notice 25

U

U.S. modem statement 10
Ukraine restriction of hazardous
substances notice 41, 51

V

voice support 13
volume level notice, headset and
earphone 24

W

wireless LAN devices 3, 18, 19