Regulatory, Safety, and Environmental Notices

User Guide

© Copyright 2018 HP Development Company, L.P.

Bluetooth is a trademark owned by its proprietor and used by HP Inc. under license. ENERGY STAR and the ENERGY STAR mark are registered U.S. marks. Java is a registered trademark of Oracle and/or its affiliates.

The information contained herein is subject to change without notice. The only warranties for HP products and services are set forth in the express warranty statements accompanying such products and services. Nothing herein should be construed as constituting an additional warranty. HP shall not be liable for technical or editorial errors or omissions contained herein.

First Edition: March 2018

Document Part Number: L25269-001

About This Guide

This guide provides regulatory, safety and environmental information that is compliant with U.S., Canadian, and international regulations for notebook computers, desktops, thin clients, and personal workstations.

To access the latest user guides or manuals for your product, go to http://www.hp.com/support. Select **Find your product**, and then follow the on-screen instructions.

WARNING! Text set off in this manner indicates that failure to follow directions could result in bodily harm or loss of life.

CAUTION: Text set off in this manner indicates that failure to follow directions could result in damage to equipment or loss of information.

NOTE: Text set off in this manner provides important supplemental information.

Table of contents

1 Regulatory notices for notebook and tablet computers 1

Accessing regulatory labels 1

Federal Communications Commission notice 1

Modifications 2

Cables 2

Products with wireless LAN devices or HP Mobile Broadband Modules 2

Brazil notice 3

Canada notices 3

European Union regulatory notices 4

Declaration of Conformity 4

Products with radio functionality (EMF) 4

Restrictions for products with radio functionality (select products only) 4

Radio frequency bands and maximum power levels (select products only) 4

European telephone network declaration (Modem/Fax) 5

Ergonomics notice 5

Germany 5

Germany (Deutscher text) 5

Australia and New Zealand notice 5

China WWAN notice 6

Japan notice 6

Wireless LAN, Wireless WAN, and Bluetooth® certification markings 6

Mexico notice 6

Singapore wireless notice 7

South Korea notices 7

Thailand WWAN wireless notice 7

Taiwan NCC notices 7

Wireless LAN 802.11a devices 7

Wireless LAN 802.11 devices/Bluetooth devices/Short range devices 8

Airline travel notice 8

User-replaceable battery notices 8

Factory-sealed battery notices 8

Laser compliance 8

Modem notices 9

Telecommunications device approvals 9

U.S. modem statements 9

U.S. modem declarations 10

Canada modem statements 12
Japan modem statements 12
New Zealand modem statements 12
Voice support 13
Power cord notice 13
Japan power cord notice 13
DC plug of external HP power supply 13
Macrovision Corporation notice 13

2 Regulatory notices for desktops, thin clients, personal workstations, all-in-ones, and point-of-sale terminals 14
Accessing regulatory labels 14
Modem notices 15
Telecommunications device approvals 15
U.S. modem statements 15
Canadian modem statements 16
Japanese modem statements 16
New Zealand modem statements 16
Voice support 17
Electromagnetic compatibility notices 17
Federal Communications Commission notice 17
Modifications 18
Cables 18
Products with wireless LAN devices 18
Australia telecom statement 19
Brazil notice 19
Canadian notice 19
European Union regulatory notices 19
Declaration of Conformity 19
Products with radio functionality (EMF) 20
Restrictions for products with radio functionality (select products only) 20
Radio frequency bands and maximum power levels (select products only) 20
European telephone network declaration (Modem/Fax) 21
Ergonomics notice 21
Germany 21
Germany (Deutscher text) 21
Japan notice 21
Japan power cord notice 21
Wireless LAN and Bluetooth certification markings 22

Mexico notice 22
South Korea notices 22
Thailand WWAN wireless notice 22
Taiwan NCC notices 23
Wireless LAN 802.11a devices 23
Wireless LAN 802.11 devices/Bluetooth devices/Short range devices 23
Airline travel notice 23
User-replaceable battery notices 23
Factory-sealed battery notices 23
Laser compliance 24

3 Safety notices for notebook and tablet computers 25
Heat-related safety warning notice 25
Potential safety conditions notice 25
Battery notices 25
Headset and earphone volume level notice 26
Power cord notices 26
Brazil notice 26
Cleaning the keyboard 26
Travel notice 26
China safety notices 27
China: Altitude notice 27
China: Tropical warning notice 27
Norway and Sweden: Cable grounding notice for products with a TV tuner 27
使用過度恐傷害視力 27

4 Safety notices for desktops, thin clients, personal workstations, all-in-ones, and point-of-sale terminals 28
Important safety information 28
Installation conditions 29
Battery notices 29
Fan notices 30
Headset and earphone volume level notice 30
Laser safety 30
Power supply and power cord set requirements 30
Power supply class I grounding requirements 30
Brazil notice 31
Denmark 31
Finland 31
Norway 31
Sweden 31
Power supply requirements 31

For use in Norway ... 31
Power cord set requirements ... 31
Japan power cord requirements ... 32
Pinch hazard ... 32
TV antenna connectors protection ... 32
External television antenna grounding ... 32
Lightning protection ... 32
Note to CATV system installer ... 33
China safety notices ... 34
China: Altitude notice ... 34
China: Tropical warning notice ... 34
Germany acoustics notice ... 35
Norway and Sweden: Cable grounding notice for products with a TV tuner ... 35
使用過度恐傷害視力 ... 35

5 Environmental notices for notebook and tablet computers ... 36
Electronic hardware, packaging and battery recycling ... 36
Disposal of waste equipment by users ... 36
Brazil alkaline battery disposal ... 36
Brazil hardware recycling information ... 36
ENERGY STAR® Certification (select models only) ... 37
Chemical substances ... 38
China environmental notices ... 38
China PC energy label ... 38
China restriction of hazardous substances (RoHS) ... 41
The Table of Hazardous Substances/Elements and their Content ... 41
产品中有害物质或元素的名称及含量 ... 42
台灣有害物質限制使用管理辦法 (RoHS) ... 43
限用物質含有情況標示聲明書 ... 43
India restriction of hazardous substances (RoHS) ... 44
Information for European Union Commission Regulation 1275/2008 ... 45
IT ECO declarations ... 45
Japan restriction of hazardous substances (RoHS) ... 45
Mexico Sustainable Energy Use Law ... 45
Turkey EEE regulation ... 45
Perchlorate material—special handling may apply ... 45
TCO Certified ... 46
TCO Certified Edge ... 47

6 Environmental notices for desktops, thin clients, personal workstations, all-in-ones, and point-of-sale terminals 48

Electronic hardware, packaging and battery recycling 48
Disposal of waste equipment by users 48
Brazil alkaline battery disposal 48
Brazil hardware recycling information 48
ENERGY STAR® Certification (select models only) 49
Chemical substances 50
Mercury statement 50
Perchlorate material–special handling may apply 50
China environmental notices 50
China PC energy label 51
China restriction of hazard substances (ROHS) 54
The Table of Hazardous Substances/Elements and their Content 54
产品中有害物质或元素的名称及含量 55
台灣有害物質限制使用管理辦法 (RoHS) 57
限用物質含有情況標示聲明書 57
India restriction of hazardous substances (RoHS) 58
Information for European Union Commission Regulation 1275/2008 58
IT ECO declarations 58
Japan restriction of hazardous substances (RoHS) 58
Mehiški zakon o uporabi trajnostne energije 58
Turkey EEE regulation 59
TCO Certified 59
TCO Certified Edge 60

Index 62

1 Regulatory notices for notebook and tablet computers

This chapter provides country- and region-specific non-wireless and wireless regulatory notices and compliance information for the computer product. Some of these notices may not apply to your product.

One or more integrated wireless devices may be installed. In some environments, the use of wireless devices may be restricted. Such restrictions may apply aboard airplanes, in hospitals, near explosives, in hazardous locations, and so on. If you are uncertain of the policy that applies to the use of this product, ask for authorization to use it before you turn it on.

Accessing regulatory labels

Regulatory labels, which provide country or regional regulatory information (for example, FCC ID), may be physically located on the bottom of the computer, inside the battery bay (select models only), under the removable service door (select models only), on the back of the display, or on the wireless or modem module.

Some products may also provide electronic regulatory labels (e-labels) that can be accessed through the system BIOS.

NOTE: Electronic labels are not available on all products.

NOTE: Devices not for sale or use in the United States may not contain a FCC ID.

To view electronic regulatory labels:

1. Turn on or restart the computer.
2. Press esc or f10 to enter Computer Setup.
3. Use a pointing device or the arrow keys to select **Advanced**, select **Electronic Labels**, and then press enter.
4. To view an electronic label, use a pointing device or the arrow keys to select one of the listed items, and then press **OK**.

   NOTE: The list of available electronic label items varies depending on the computer model and installed devices.

5. To exit Computer Setup menus without making any changes:

   Select the **Exit** icon in the lower-right corner of the screen, and then follow the on-screen instructions.

   – or –

   Use the arrow keys to select **Main**, select **Ignore Changes and Exit**, and then press enter.

Federal Communications Commission notice

This equipment has been tested and found to comply with the limits for a Class B digital device, pursuant to Part 15 of the FCC Rules. These limits are designed to provide reasonable protection against harmful interference in a residential installation. This equipment generates, uses, and can radiate radio frequency energy and, if not installed and used in accordance with the instructions, may cause harmful interference to

radio communications. However, there is no guarantee that interference will not occur in a particular installation.

If this equipment does cause harmful interference to radio or television reception, which can be determined by turning the equipment off and on, the user is encouraged to try to correct the interference by one or more of the following measures:

- Reorient or relocate the receiving antenna.
- Increase the separation between the equipment and receiver.
- Connect the equipment to an outlet on a circuit different from that to which the receiver is connected.
- Consult the dealer or an experienced radio or television technician for help.

This device complies with Part 15 of the FCC Rules. Operation is subject to the following two conditions:

1. This device may not cause harmful interference, and
2. This device must accept any interference received, including interference that may cause undesired operation.

For questions regarding this product:

- Write to:

  HP Inc.

  1501 Page Mill Road

  Palo Alto, CA 94304
- Call HP at 650-857-1501

  – or –
- Email techregshelp@hp.com

To identify this product, refer to the part, series, or model number found on the product.

Modifications

The FCC requires the user to be notified that any changes or modifications made to this device that are not expressly approved by HP may void the user's authority to operate the equipment.

Cables

To maintain compliance with FCC Rules and Regulations, connections to this device must be made with shielded cables having metallic RFI/EMI connector hoods.

Products with wireless LAN devices or HP Mobile Broadband Modules

This device must not be co-located or operating in conjunction with any other antenna or transmitter.

WARNING! **Exposure to Radio Frequency Radiation** The radiated output power of this device is below the FCC radio frequency exposure limits. Nevertheless, the device should be used in such a manner that the potential for human contact is minimized during normal operation of tablet PCs and notebook computers.

During normal operation of tablet PCs and notebook computers with displays equal to or less than 30.5 cm (12 inches): To avoid the possibility of exceeding the FCC radio frequency exposure limits, human proximity to the antennas should not be less than 2.5 cm (1 inch). To identify the location of the wireless antennas, refer to the computer user guides included with your computer.

During normal operation of notebook computers with displays greater than 30.5 cm (12 inches): To avoid the possibility of exceeding the FCC radio frequency exposure limits, human proximity to the antennas should not be less than 20 cm (8 inches), including when the computer display is closed. To identify the location of the wireless antennas, refer to the computer user guides included with your computer.

Brazil notice

Este equipamento opera em caráter secundário, isto é, não tem direito a proteção contra interferência prejudicial, mesmo de estações do mesmo tipo, e não pode causar interferência a sistemas operando em caráter primário.

Este equipamento atende aos limites de Taxa de Absorção Específica referente à exposição a campos elétricos, magnéticos e eletromagnéticos de radiofreqüências adotados pela ANATEL.

Ao operar o dispositivo a uma distância muito próxima do seu corpo, utilize um acessório de armazenamento não metálico para posicionar o dispositivo a uma distância mínima de 1,5 cm do corpo.

Canada notices

This Class B digital apparatus meets all requirements of the Canadian Interference-Causing Equipment Regulations, CAN ICES-3(B)/NMB-3(B). If this device has WLAN or Bluetooth capability, the device complies with Industry Canada licence-exempt RSS standard(s). Operation is subject to the following two conditions: (1) this device may not cause interference, and (2) this device must accept any interference, including interference that may cause undesired operation of the device.

WARNING! Exposure to Radio Frequency Radiation: The radiated output power of this device is below the Industry Canada radio frequency exposure limits. Nevertheless, the device should be used in such a manner that the potential for human contact is minimized during normal operation.

During normal operation of tablet PCs and notebook computers with displays equal to or less than 30.5 cm (12 inches): To avoid the possibility of exceeding the Industry Canada radio frequency exposure limits, human proximity to the antennas should not be less than 2.5 cm (1 inch). To identify the location of the wireless antennas, refer to the computer user guides included with your computer.

During normal operation of notebook computers with displays greater than 30.5 cm (12 inches): To avoid the possibility of exceeding the Industry Canada radio frequency exposure limits, human proximity to the antennas should not be less than 20 cm (8 inches), including when the computer display is closed. To identify the location of the wireless antennas, refer to the computer user guides included with your computer.

CAUTION: When using IEEE 802.11a, n, or ac wireless LAN, this product is restricted to indoor use, due to its operation in the 5.15- to 5.25-GHz frequency range. Industry Canada requires this product to be used indoors for the frequency range of 5.15 GHz to 5.25 GHz to reduce the potential for harmful interference to co-channel mobile satellite systems. High-power radar is allocated as the primary user of the 5.25- to 5.35-GHz and 5.65- to 5.85-GHz bands. These radar stations can cause interference with and/or damage to this device.

The antennas for this device are not replaceable. Any attempt at user access will damage your computer.

European Union regulatory notices

Declaration of Conformity

Products bearing the CE marking have been constructed so that they can operate in at least one EU Member State and comply with one or more of the following EU Directives as may be applicable:

RED 2014/53/EU; Low Voltage Directive 2014/35/EU; EMC Directive 2014/30/EU; Ecodesign Directive 2009/125/EC; RoHS Directive 2011/65/EU.

Compliance with these directives is assessed using applicable European Harmonised Standards.

The full Declaration of Conformity can be found at the following website: http://www.hp.eu/certificates (Search with the product model name or its Regulatory Model Number (RMN), which may be found on the regulatory label.)

The point of contact for regulatory matters is HP Deutschland GmbH, HQ-TRE, 71025, Boeblingen, Germany. Email techregshelp@hp.com

Products with radio functionality (EMF)

This product incorporates a radio transmitting and receiving device. For notebook computers in normal use, a separation distance of 20 cm ensures that radio frequency exposure levels comply with EU requirements. Products designed to be operated at closer proximities, such as tablet computers, comply with applicable EU requirements in typical operating positions. Products can be operated without maintaining a separation distance unless otherwise indicated in instructions specific to the product.

Restrictions for products with radio functionality (select products only)

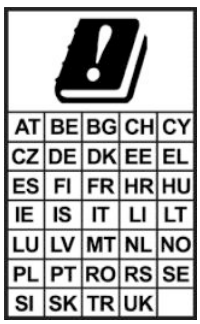

CAUTION: IEEE 802.11x wireless LAN with 5.15–5.35 GHz frequency band is restricted for indoor use only for all countries reflected in the matrix. Using this WLAN application outdoors might lead to interference issues with existing radio services.

CAUTION: Fixed outdoor installations for WiGig application (57–66 GHz frequency band) are excluded for all countries reflected in the matrix.

Radio frequency bands and maximum power levels (select products only)

Radio Technology	Maximum Transmit Power EIRP (mW)
Bluetooth; 2,4 GHz	100
NFC; 13,56 MHz	10
RFID; 125 kHz/13,56 MHz	Less than 1
WLAN Wi-Fi 802.11x; 2,4 GHz	100
WLAN Wi-Fi 802.11x; 5 GHz	200
WWAN 4G LTE; 700/800/900/1800/2100/2600 MHz	200
WWAN 3G UTMS; 900/2100 MHz	250

Radio Technology	Maximum Transmit Power EIRP (mW)
WWAN 2G GSM GPRS EDGE; 900 MHz	2000
WWAN 2G GSM GPRS EDGE; 1800 MHz	1000
WiGig 802.11ad; 60 GHz	316
Wireless Charging Qi; 110 kHz - 205 kHz	Less than 1
NOTE: Use only HP-supported software drivers and correct country settings to ensure compliance.	

European telephone network declaration (Modem/Fax)

The product herewith complies with the requirements of the applicable Directive and carries the CE marking accordingly. However, due to differences between the individual PSTNs provided in different countries/regions, the approval does not, of itself, give an unconditional assurance of successful operation on every PSTN network termination point. In the event of problems, you should contact your equipment supplier in the first instance.

Ergonomics notice

Germany

When a mobile computer is used at the office workstation for display work tasks where the Visual Display Unit (VDU) Directive 90/270/EEC is applicable, an adequate external keyboard is required. Depending on the application and task, an adequate external monitor may also be necessary to attain working conditions comparable to a workstation setup.

Ref: EK1-ITB 2000 (voluntary GS certification)

Mobile computers bearing the "GS" approval mark meet the applicable ergonomic requirements. Without external keyboards, they are suitable only for short-time use of VDU tasks.

During mobile use with disadvantageous illumination conditions (e.g. direct sun light) reflections may occur, which result in reduced readability.

Germany (Deutscher text)

Wird ein mobiler Computer für Bildschirmarbeitsaufgaben verwendet, wo die Richtlinie 90/270/EEG (Bildschirmarbeitsrichtlinie) anzuwenden ist, wird eine geeignete externe Tastatur notwendig. Abhängig von der Anwendung und der Aufgabe kann ein geeigneter externer Monitor erforderlich sein, um vergleichbare Arbeitsbedingungen zu einem stationären Arbeitsplatz zu erreichen.

Ref: EK1-ITB 2000 (freiwillige GS Zertifizierung)

Mobile Computer, welche das "GS" Zeichen tragen, entsprechen den ergonomischen Anforderungen und sind nur für kurzzeitige Benutzung von Bildschirmarbeitsaufgaben geeignet.

Bei mobiler Nutzung mit ungünstigen Lichtverhältnissen (z.B. direkte Sonneneinstrahlung) kann es zu Reflexionen und damit zu Einschränkungen der Lesbarkeit der dargestellten Zeichen kommen.

Australia and New Zealand notice

This equipment incorporates a radio transmitting and receiving device. In normal use, a separation distance of 20 cm ensures that radio frequency exposure levels comply with the Australian and New Zealand Standards.

China WWAN notice

重要信息：用户自己进行操作系统安全升级或更新，要执行授权的操作系统进行升级或更新。当不能保证操作系统安全的升级或更新时，可能导致服务安全问题。

Japan notice

V-2 規定適合の場合

この装置は，クラスB情報技術装置です。この装置は，家庭環境で使用することを目的としていますが，この装置がラジオやテレビジョン受信機に近接して使用されると，受信障害を引き起こすことがあります。
取扱説明書に従って正しい取り扱いをして下さい。 VCCI－B

VCCI32-1 規定適合の場合

この装置は、クラスB機器です。この装置は、住宅環境で使用することを目的としていますが、この装置がラジオやテレビジョン受信機に近接して使用されると、受信障害を引き起こすことがあります。
取扱説明書に従って正しい取り扱いをして下さい。 VCCI－B

5GHz 帯を使用する特定無線設備は屋内使用に限られています。この機器を屋外で使用することは電波法で禁じられています。

Wireless LAN, Wireless WAN, and Bluetooth® certification markings

この機器は、技術基準適合証明または工事設計認証を受けた無線設備を搭載しています

This product contains certified radio equipment.

Some products may use electronic regulatory labels (e-labels). To view the certification mark and numbers on an e-label, please refer to the previous “Accessing regulatory labels” section.

一部の製品では、電子規定ラベル（e ラベル）が使用されています。e ラベルの技適マークと認証番号を確認するには、「規定ラベルの確認」の項目をご覧ください

Mexico notice

Declaración para México

La operación de este equipo está sujeta a las siguientes dos condiciones: (1) es posible que este equipo o dispositivo no cause interferencia perjudicial y (2) este equipo o dispositivo debe aceptar cualquier interferencia, incluyendo la que pueda causar su operación no deseada. The regulatory model number for this product is on the regulatory label.

If your product is provided with wireless accessories such as a keyboard or mouse and you need to identify the model of the accessory, refer to the label included on that accessory. The regulatory model number for this product is on the regulatory label.

Singapore wireless notice

Turn off any WWAN devices while you are aboard aircraft. The use of these devices aboard aircraft is illegal, may be dangerous to the operation of the aircraft, and may disrupt the cellular network. Failure to observe this instruction may lead to suspension or denial of cellular services to the offender, or legal action, or both.

Users are reminded to restrict the use of radio equipment in fuel depots, chemical plants, and where blasting operations are in progress.

As with other mobile radio transmitting equipment, users are advised that for satisfactory operation of the equipment and for the safety of personnel, no part of the human body should be allowed to come too close to the antennas during operation of the equipment.

This device has been designed to comply with applicable requirements for exposure to radio waves, based on scientific guidelines that include margins intended to assure the safety of all people, regardless of health and age. These radio wave exposure guidelines employ a unit of measurement known as the specific absorption rate (SAR). Tests for SAR are conducted using standardized methods, with the phone transmitting at its highest certified power level in all used frequency bands. The SAR data information is based on CENELEC's standards EN50360 and EN50361, which use the limit of 2 watts per kilogram, averaged over 10 grams of tissue.

South Korea notices

무선적용제품

해당 무선설비가 전파혼신 가능성이 있으므로 인명안전과 관련된 서비스는 할 수 없음 (무선모듈 제품이 설치되어 있는 경우).

몸 가까이에서 장치를 작동할 경우, 비금속 저장 액세서리를 사용하여 장치와 몸 사이에 2.5cm 이상의 거리를 유지하십시오.

Thailand WWAN wireless notice

เครื่องโทรคมนาคมและอุปกรณ์นี้ มีความสอดคล้องตามมาตรฐานหรือข้อกำหนดของ กสทช.

(This telecommunication equipment conforms to the requirements of NBTC.)

Taiwan NCC notices

Wireless LAN 802.11a devices

在5.25G ~5.35G頻帶內操作之無線
資訊傳輸設備僅適於室內使用

Wireless LAN 802.11 devices/Bluetooth devices/Short range devices

低功率電波輻射性電機管理辦法

第十二條 經型式認證合格之低功率射頻電機，非經許可，公司、商號或使用者均不得擅自變更頻率、加大功率或變更原設計之特性及功能。

第十四條 低功率射頻電機之使用不得影響飛航安全及干擾合法通信；經發現有干擾現象時，應立即停用，並改善至無干擾時方得繼續使用。

前項合法通信，指依電信規定作業之無線電信。低功率射頻電機須忍受合法通信或工業、科學及醫療用電波輻射性電機設備之干擾。

Airline travel notice

Use of electronic equipment aboard commercial aircraft is at the discretion of the airline.

User-replaceable battery notices

When a battery has reached the end of its useful life, do not dispose of the battery in general household waste. Follow the local laws and regulations in your area for computer battery disposal.

HP encourages customers to recycle used electronic hardware, HP original print cartridges, and rechargeable batteries. For more information about recycling programs, refer to the HP website at http://www.hp.com/recycle.

For information about removing a user-replaceable battery, refer to the user guide included with the product.

Factory-sealed battery notices

The battery[ies] in this product cannot be easily replaced by users themselves. Removing or replacing the battery could affect your warranty coverage. If a battery is no longer holding a charge, contact support.

When a battery has reached the end of its useful life, do not dispose of the battery in general household waste. Follow the local laws and regulations in your area for battery disposal.

Laser compliance

⚠ **WARNING!** Use of controls or adjustments, or performance of procedures other than those specified in the laser product installation guide, may result in hazardous radiation exposure. To reduce the risk of exposure to hazardous radiation:

- Do not try to open the module enclosure. There are no user-serviceable components inside.
- Do not operate controls, make adjustments, or perform procedures to the laser device other than those specified in the laser product installation guide.
- Allow only authorized service providers to repair the unit.

This product may be provided with an optical storage device (for example, a CD or DVD drive) and/or a fiber optic transceiver. Each of these devices that contain a laser is classified as a Class 1 Laser Product in accordance with IEC/EN 60825-1 and meets the requirements for safety of that standard.

Each laser product complies with US FDA regulations of 21 CFR 1040.10 and 1040.11 or complies with those regulations except for deviations pursuant to Laser Notice No. 50 dated June 24, 2007.

Modem notices

⚠ **WARNING!** To reduce the risk of fire, electric shock, and injury to persons when using this device, always follow basic safety precautions, including the following:

- Do not use this product near water—for example, near a bathtub, wash bowl, kitchen sink or laundry tub, in a wet basement, or near a swimming pool.
- Avoid using this product during an electrical storm. There is a remote risk of electric shock from lightning.
- Do not use this product to report a gas leak while in the vicinity of the leak.
- Always disconnect the modem cable before opening the equipment enclosure or touching an uninsulated modem cable, jack, or internal component.
- If this product was not provided with a telephone line cord, use only No. 26 AWG or larger telecommunication line cord.
- Do not plug a modem or telephone cable into the RJ-45 (network) jack.

SAVE THESE INSTRUCTIONS.

Telecommunications device approvals

The telecommunications device in the computer is approved for connection to the telephone network in the countries and regions whose approval markings are indicated on the product label located on the bottom of the computer or on the modem.

Refer to the user guide included with the product to ensure that the product is configured for the country or region in which the product is located. Selecting a country or region other than the one in which it is located may cause the modem to be configured in a way that violates the telecommunication regulations/laws of that country or region. In addition, the modem may not function properly if the correct country or region selection is not made. If, when you select a country or region, a message appears that states that the country or region is not supported, this means that the modem has not been approved for use in this country or region and thus should not be used.

U.S. modem statements

This equipment complies with Part 68 of the FCC Rules and the requirements adopted by the ACTA. On the bottom of the computer or on the modem is a label that contains, among other information, a product identifier in the format US:AAAEQ##TXXXX. Provide this information to the telephone company if you are requested to do so.

Applicable certification jack USOC = RJ11C. A plug and jack used to connect this equipment to the premises wiring and telephone network must comply with the applicable FCC Part 68 rules and requirements adopted by the ACTA. A compliant telephone cord and modular plug is provided with this product. It is designed to be connected to a compatible modular jack that is also compliant. See installation instructions for details.

The REN is used to determine the number of devices that may be connected to a telephone line. Excessive RENs on a telephone line may result in the devices not ringing in response to an incoming call. In most but not all locations, the sum of RENs should not exceed five (5.0). To be certain of the number of devices that may be connected to a line, as determined by the total RENs, contact the local telephone company. For products approved after July 23, 2001, the REN for this product is part of the product identifier that has the format US:AAAEQ##TXXXX. The digits represented by ## are the REN without a decimal point (e.g., 03 is a REN of 0.3). For earlier products, the REN is separately shown on the label.

If this HP equipment causes harm to the telephone network, the telephone company will notify you in advance that temporary discontinuance of service may be required. But, if advance notice isn't practical, the telephone company will notify you as soon as possible. Also, you will be advised of your right to file a complaint with the FCC if you believe it is necessary.

The telephone company may make changes to its facilities, equipment, operations, or procedures that could affect the operation of the equipment. If this happens, the telephone company will provide advance notice in order for you to make necessary modifications to maintain uninterrupted telephone service.

If trouble is experienced with this equipment, call technical support. If the equipment is causing harm to the telephone network, the telephone company may request that you disconnect the equipment until the problem is resolved. You should perform repairs only to the equipment specifically discussed in the “Troubleshooting” section of the user guide, if one is provided.

Connection to party line service is subject to state tariffs. Contact the state public utility commission, public service commission, or corporation commission for information.

If your home has specially wired alarm equipment connected to the telephone line, ensure that the installation of this HP equipment does not disable your alarm equipment. If you have questions about what will disable alarm equipment, consult your telephone company or a qualified installer.

The Telephone Consumer Protection Act of 1991 makes it unlawful for any person to use a computer or other electronic device, including a fax machine, to send any message unless such message clearly contains in a margin at the top or bottom of each transmitted page, or on the first page of the transmission, the date and time it is sent and an identification of the business, other entity, or other individual sending the message, and the telephone number of the sending machine or such business, other entity, or individual. (The telephone number provided may not be a 900 number or any other number for which charges exceed local or long-distance transmission charges).

In order to program this information into your fax machine, you should complete the steps outlined in the faxing software instructions.

U.S. modem declarations

Refer to the following modem vendor declarations for the modem device installed in your computer:

agere systems

Brad Grande
Technical Manager

1110 American Parkway NE
Lehigh Valley Central Campus
Allentown, PA 18109
Phone: 610-712-7853
bgrande@agere.com

Supplier's Declaration of Conformity

Reference Number: Delphi D40 (revision AM5)
Place of Issue: Allentown, PA, USA
Date of Issue: 30th November 2006

Agere Systems Inc. at 1110 American Parkway NE, Lehigh Valley Central Campus, Allentown, PA 18109 in the United States of America, hereby certifies that the Modem, bearing labelling identification number **US: AGSMD01BDELPHI** complies with the Federal Communications Commission's ("FCC") Rules and Regulations 47 CFR Part 68, and the Administrative Council on Terminal Attachments ("ACTA")-adopted technical criteria TIA/EIA/IS-968, 968-A, 968-A-1, 968-A-2 and 968-A-3 Telecommunications – Telephone Terminal Equipment –Technical Requirements for Connection of Terminal Equipment To the Telephone Network.

Brad Grand
Technical Manager

Canada modem statements

This equipment meets the applicable Industry Canada technical specifications.

The Ringer Equivalence Number, REN, is an indication of the maximum number of devices allowed to be connected to a telephone interface. The termination on an interface may consist of any combination of devices, subject only to the requirement that the sum of the RENs of all devices does not exceed 5. The REN for this terminal equipment is 1.0.

Japan modem statements

If the computer does not have the Japanese certification mark on the bottom of the computer, refer to the appropriate certification marking below.

The Japanese certification mark for the V.92 56K Data/Fax Modem is below:

New Zealand modem statements

The grant of a Telepermit for any item of terminal equipment indicates only that Telecom has accepted that the item complies with minimum conditions for connection to its network. It indicates no endorsement of the product by Telecom, nor does it provide any sort of warranty. Above all, it provides no assurance that any item will work correctly in all respects with another item of Telepermitted equipment of a different make or model, nor does it imply that any product is compatible with all of Telecom's network services.

This equipment is not capable, under all operating conditions, of correct operation at the higher speeds for which it is designed. Telecom will accept no responsibility should difficulties arise in such circumstances.

If this device is equipped with pulse dialing, note that there is no guarantee that Telecom lines will always continue to support pulse dialing.

Use of pulse dialing, when this equipment is connected to the same line as other equipment, may give rise to bell tinkle or noise and may also cause a false answer condition. Should such problems occur, the user should *not* contact the Telecom Faults Service.

Some parameters required for compliance with Telecom's Telepermit requirements are dependent on the equipment (PC) associated with this device. The associated equipment shall be set to operate within the following limits for compliance with Telecom's Specifications:

a. There shall be no more than 10 call attempts to the same number within any 30-minute period for any single manual call initiation.

b. The equipment shall go on-hook for a period of not less than 30 seconds between the end of one attempt and the beginning of the next attempt.

c. Where automatic calls are made to different numbers, the equipment shall be set to go on-hook for a period of not less than 5 seconds between the end of one attempt and the beginning of the next attempt.

d. The equipment shall be set to ensure that calls are answered between 3 and 30 seconds of receipt of ringing (So set between 2 and 10).

Voice support

All persons using this device for recording telephone conversations shall comply with New Zealand law. This requires that at least one party to the conversation is aware that it is being recorded. In addition, the Principles enumerated in the Privacy Act 1993 shall be complied with in respect to the nature of the personal information collected, the purpose for its collection, how it is to be used, and what is disclosed to any other party.

This equipment shall not be set to make automatic calls to the Telecom '111' Emergency Service.

Power cord notice

If you were not provided with a power cord for the computer or for an external power accessory intended for use with the computer, you should purchase a power cord that is approved for use in your country or region.

The power cord must be rated for the product and for the voltage and current marked on the product's electrical ratings label. The voltage and current rating of the cord should be greater than the voltage and current rating marked on the product. In addition, the diameter of the wire must be a minimum of **0.75 mm²**/18AWG, and the length of the cord must be between **1.0 m** (3.2 ft) and **2 m** (6.56 ft). If you have questions about the type of power cord to use, contact your authorized service provider.

A power cord should be routed so that it is not likely to be walked on or pinched by items placed upon it or against it. Particular attention should be paid to the plug, electrical outlet, and the point where the cord exits from the product.

Japan power cord notice

製品には、同梱された電源コードをお使い下さい。
同梱された電源コードは、他の製品では使用出来ません。

DC plug of external HP power supply

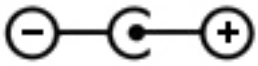

Macrovision Corporation notice

This product incorporates copyright protection technology that is protected by method claims of certain U.S. patents and other intellectual property rights owned by Macrovision Corporation and other rights owners. Use of this copyright protection technology must be authorized by Macrovision Corporation and is intended for home and other limited viewing uses only, unless otherwise authorized by Macrovision Corporation. Reverse engineering or disassembly is prohibited.

2 Regulatory notices for desktops, thin clients, personal workstations, all-in-ones, and point-of-sale terminals

Accessing regulatory labels

Regulatory labels, which provide country or regional regulatory information (for example, FCC ID), may be physically located on the bottom of the computer, inside the battery bay, under the removable service door, on the back of the display, or on the wireless or modem module.

Some products may also provide electronic regulatory labels (e-labels) that can be accessed through the system BIOS.

NOTE: Electronic labels are not available on all products.

NOTE: Devices not for sale or use in the United States may not contain a FCC ID.

To view electronic regulatory labels:

1. Turn on or restart the computer.
2. Press esc or f10 to enter Computer Setup.
3. Use a pointing device or the arrow keys to select **Advanced**, select **Electronic Labels**, and then press enter.
4. To view an electronic label, use a pointing device or the arrow keys to select one of the listed items, and then press **OK**.

   NOTE: The list of available electronic label items varies depending on the computer model and installed devices.

5. To exit Computer Setup menus without making any changes:

   Select the **Exit** icon in the lower-right corner of the screen, and then follow the on-screen instructions.

   – or –

   Use the arrow keys to select **Main**, select **Ignore Changes and Exit**, and then press enter.

Modem notices

⚠ **WARNING!** To reduce the risk of fire, electric shock, and injury to persons when using this device, always follow basic safety precautions, including the following:

- Do not use this product near water—for example, near a bathtub, wash bowl, kitchen sink or laundry tub, in a wet basement, or near a swimming pool.
- Avoid using this product during an electrical storm. There is a remote risk of electric shock from lightning.
- Do not use this product to report a gas leak while in the vicinity of the leak.
- Always disconnect the modem cable before opening the equipment enclosure or touching an uninsulated modem cable, jack, or internal component.
- If this product was not provided with a telephone line cord, use only No. 26 AWG or larger telecommunication line cord.
- Do not plug a modem or telephone cable into the RJ-45 (Ethernet network) jack.

SAVE THESE INSTRUCTIONS.

Telecommunications device approvals

The telecommunications device in the computer is approved for connection to the telephone network in the countries and regions whose approval markings are indicated on the product label located on the bottom of the computer or on the modem.

Refer to the user guide included with the product to ensure that the product is configured for the country or region in which the product is located. Selecting a country or region other than the one in which it is located may cause the modem to be configured in a way that violates the telecommunication regulations/laws of that country or region. In addition, the modem may not function properly if the correct country or region selection is not made. If, when you select a country or region, a message appears that states that the country or region is not supported, this means that the modem has not been approved for use in this country or region and thus should not be used.

U.S. modem statements

This equipment complies with Part 68 of the FCC Rules and the requirements adopted by the ACTA. On the bottom of the computer or on the modem is a label that contains, among other information, a product identifier in the format US:AAAEQ##TXXXX. Provide this information to the telephone company if you are requested to do so.

Applicable certification jack USOC = RJ11C. A plug and jack used to connect this equipment to the premises wiring and telephone network must comply with the applicable FCC Part 68 rules and requirements adopted by the ACTA. A compliant telephone cord and modular plug is provided with this product. It is designed to be connected to a compatible modular jack that is also compliant. See installation instructions for details.

The REN is used to determine the number of devices that may be connected to a telephone line. Excessive RENs on a telephone line may result in the devices not ringing in response to an incoming call. In most but not all locations, the sum of RENs should not exceed five (5.0). To be certain of the number of devices that may be connected to a line, as determined by the total RENs, contact the local telephone company. For products approved after July 23, 2001, the REN for this product is part of the product identifier that has the format US:AAAEQ##TXXXX. The digits represented by ## are the REN without a decimal point (e.g., 03 is a REN of 0.3). For earlier products, the REN is separately shown on the label.

If this HP equipment causes harm to the telephone network, the telephone company will notify you in advance that temporary discontinuance of service may be required. But, if advance notice isn't practical, the

telephone company will notify you as soon as possible. Also, you will be advised of your right to file a complaint with the FCC if you believe it is necessary.

The telephone company may make changes to its facilities, equipment, operations, or procedures that could affect the operation of the equipment. If this happens, the telephone company will provide advance notice in order for you to make necessary modifications to maintain uninterrupted telephone service.

If trouble is experienced with this equipment, call technical support. If the equipment is causing harm to the telephone network, the telephone company may request that you disconnect the equipment until the problem is resolved. You should perform repairs only to the equipment specifically discussed in the "Troubleshooting" section of the user guide, if one is provided.

Connection to party line service is subject to state tariffs. Contact the state public utility commission, public service commission, or corporation commission for information.

If your home has specially wired alarm equipment connected to the telephone line, ensure that the installation of this HP equipment does not disable your alarm equipment. If you have questions about what will disable alarm equipment, consult your telephone company or a qualified installer.

The Telephone Consumer Protection Act of 1991 makes it unlawful for any person to use a computer or other electronic device, including a fax machine, to send any message unless such message clearly contains in a margin at the top or bottom of each transmitted page, or on the first page of the transmission, the date and time it is sent and an identification of the business, other entity, or other individual sending the message, and the telephone number of the sending machine or such business, other entity, or individual. (The telephone number provided may not be a 900 number or any other number for which charges exceed local or long-distance transmission charges).

In order to program this information into your fax machine, you should complete the steps outlined in the faxing software instructions.

Canadian modem statements

This equipment meets the applicable Industry Canada technical specifications.

The Ringer Equivalence Number, REN, is an indication of the maximum number of devices allowed to be connected to a telephone interface. The termination on an interface may consist of any combination of devices, subject only to the requirement that the sum of the RENs of all devices does not exceed 5. The REN for this terminal equipment is 1.0.

Japanese modem statements

If the computer does not have the Japanese certification mark on the bottom of the computer, refer to the appropriate certification marking below.

The Japanese certification mark for the LSI Corporation PCI-SV92EX Soft modem is below:

New Zealand modem statements

The grant of a Telepermit for any item of terminal equipment indicates only that Telecom has accepted that the item complies with minimum conditions for connection to its network. It indicates no endorsement of the product by Telecom, nor does it provide any sort of warranty. Above all, it provides no assurance that any

item will work correctly in all respects with another item of Telepermitted equipment of a different make or model, nor does it imply that any product is compatible with all of Telecom's network services.

This equipment is not capable, under all operating conditions, of correct operation at the higher speeds for which it is designed. Telecom will accept no responsibility should difficulties arise in such circumstances.

If this device is equipped with pulse dialing, note that there is no guarantee that Telecom lines will always continue to support pulse dialing.

Use of pulse dialing, when this equipment is connected to the same line as other equipment, may give rise to bell tinkle or noise and may also cause a false answer condition. Should such problems occur, the user should *not* contact the Telecom Faults Service.

Some parameters required for compliance with Telecom's Telepermit requirements are dependent on the equipment (PC) associated with this device. The associated equipment shall be set to operate within the following limits for compliance with Telecom's Specifications:

a. There shall be no more than 10 call attempts to the same number within any 30-minute period for any single manual call initiation.

b. The equipment shall go on-hook for a period of not less than 30 seconds between the end of one attempt and the beginning of the next attempt.

c. Where automatic calls are made to different numbers, the equipment shall be set to go on-hook for a period of not less than 5 seconds between the end of one attempt and the beginning of the next attempt.

d. The equipment shall be set to ensure that calls are answered between 3 and 30 seconds of receipt of ringing (So set between 2 and 10).

Voice support

All persons using this device for recording telephone conversations shall comply with New Zealand law. This requires that at least one party to the conversation is aware that it is being recorded. In addition, the Principles enumerated in the Privacy Act 1993 shall be complied with in respect to the nature of the personal information collected, the purpose for its collection, how it is to be used, and what is disclosed to any other party.

This equipment shall not be set to make automatic calls to the Telecom ‘111' Emergency Service.

Electromagnetic compatibility notices

This guide provides country- and region-specific nonwireless and wireless regulatory notices and compliance information for the computer product. Some of these notices may not apply to your product.

One or more integrated wireless devices may be installed. In some environments, the use of wireless devices may be restricted. Such restrictions may apply aboard airplanes, in hospitals, near explosives, in hazardous locations, and so on. If you are uncertain of the policy that applies to the use of this product, ask for authorization to use it before you turn it on.

Federal Communications Commission notice

This equipment has been tested and found to comply with the limits for a Class B digital device, pursuant to Part 15 of the FCC Rules. These limits are designed to provide reasonable protection against harmful interference in a residential installation. This equipment generates, uses, and can radiate radio frequency energy and, if not installed and used in accordance with the instructions, may cause harmful interference to radio communications. However, there is no guarantee that interference will not occur in a particular installation. If this equipment does cause harmful interference to radio or television reception, which can be

determined by turning the equipment off and on, the user is encouraged to try to correct the interference by one or more of the following measures:

- Reorient or relocate the receiving antenna.
- Increase the separation between the equipment and the receiver.
- Connect the equipment into an outlet on a circuit different from that to which the receiver is connected.
- Consult the dealer or an experienced radio or television technician for help.

This device complies with Part 15 of the FCC Rules. Operation is subject to the following two conditions:

1. This device may not cause harmful interference, and
2. This device must accept any interference received, including interference that may cause undesired operation.

For questions regarding this product:

- Write to:

  HP Inc.

  1501 Page Mill Road

  Palo Alto, CA 94304
- Call HP at 650-857-1501

  – or –
- Email techregshelp@hp.com

To identify this product, refer to the part, series, or model number found on the product.

Modifications

The FCC requires the user to be notified that any changes or modifications made to this device that are not expressly approved by HP Inc. may void the user's authority to operate the equipment.

Cables

Connections to this device must be made with shielded cables with metallic RFI/EMI connector hoods in order to maintain compliance with FCC Rules and Regulations.

Products with wireless LAN devices

This product may be equipped with a wireless LAN device. This device must not be co-located or operating in conjunction with any other antenna or transmitter.

WARNING! **Exposure to Radio Frequency Radiation** The radiated output power of this device is below the FCC radio frequency exposure limits. Nevertheless, the device should be used in such a manner that the potential for human contact is minimized during normal operation.

During normal operation: To avoid the possibility of exceeding the FCC radio frequency exposure limits, human proximity to the antennae should not be less than 20 cm (8 inches). To identify the location of the wireless antennae, refer to the documentation included with the computer.

Australia telecom statement

The computer must be connected to the Telecommunication Network through a line cord that meets the requirements of AS/CA S008.

⚠ **WARNING!** Modems without integral RJ11 connector that are shipped with this computer should not be installed in any other device.

This equipment incorporates a radio transmitting and receiving device. In normal use, a separation distance of 20 cm ensures that radio frequency exposure levels comply with the Australian and New Zealand Standards.

Brazil notice

Este equipamento opera em caráter secundário, isto é, não tem direito a proteção contra interferência prejudicial, mesmo de estações do mesmo tipo, e não pode causar interferência a sistemas operando em caráter primário.

⚠ **CAUTION:** A alimentação de energia é predefinida para 220/230Vv. Se você possuir tomada elétrica de 110/115Vv, por favor, altere a chave na parte traseira do seu computador para a tensão correta.

Canadian notice

This Class B digital apparatus meets all requirements of the Canadian Interference-Causing Equipment Regulations, CAN ICES-3(B)/NMB-3(B). If this device has WLAN or Bluetooth capability, this device complies with Industry Canada license-exempt RSS standard(s). Operation is subject to the following two conditions: (1) this device may not cause interference, and (2) this device must accept any interference, including interference that may cause undesired operation of the device.

⚠ **WARNING!** **Exposure to Radio Frequency Radiation** The radiated output power of this device is below the Industry Canada radio frequency exposure limits. Nevertheless, the device should be used in such a manner that the potential for human contact is minimized during normal operation.

During normal operation: To avoid the possibility of exceeding the Industry Canada radio frequency exposure limits, human proximity to the antennae should not be less than 20 cm (8 inches). To identify the location of the wireless antennae, refer to the documentation included with the computer.

⚠ **CAUTION:** When using IEEE 802.11a, n, or ac wireless LAN, this product is restricted to indoor use, due to its operation in the 5.15- to 5.25-GHz frequency range. Industry Canada requires this product to be used indoors for the frequency range of 5.15 GHz to 5.25 GHz to reduce the potential for harmful interference to co-channel mobile satellite systems. High-power radar is allocated as the primary user of the 5.25- to 5.35-GHz and 5.65- to 5.85-GHz bands. These radar stations can cause interference with and/or damage to this device.

The antenna for this device is not replaceable. Any attempt at user modification may damage your computer.

European Union regulatory notices

Declaration of Conformity

Products bearing the CE marking have been constructed so that they can operate in at least one EU Member State and comply with one or more of the following EU Directives as may be applicable:

RED 2014/53/EU; Low Voltage Directive 2014/35/EU; EMC Directive 2014/30/EU; Ecodesign Directive 2009/125/EC; RoHS Directive 2011/65/EU.

Compliance with these directives is assessed using applicable European Harmonised Standards.

The full Declaration of Conformity can be found at the following website: http://www.hp.eu/certificates (Search with the product model name or its Regulatory Model Number (RMN), which may be found on the regulatory label.)

The point of contact for regulatory matters is HP Deutschland GmbH, HQ-TRE, 71025, Boeblingen, Germany. Email techregshelp@hp.com

Products with radio functionality (EMF)

This product incorporates a radio transmitting and receiving device. For computers in normal use, a separation distance of 20 cm ensures that radio frequency exposure levels comply with EU requirements. Products designed to be operated at closer proximities, such as tablet computers, comply with applicable EU requirements in typical operating positions. Products can be operated without maintaining a separation distance unless otherwise indicated in instructions specific to the product.

Restrictions for products with radio functionality (select products only)

AT	BE	BG	CH	CY
CZ	DE	DK	EE	EL
ES	FI	FR	HR	HU
IE	IS	IT	LI	LT
LU	LV	MT	NL	NO
PL	PT	RO	RS	SE
SI	SK	TR	UK	

CAUTION: IEEE 802.11x wireless LAN with 5.15–5.35 GHz frequency band is restricted for indoor use only for all countries reflected in the matrix. Using this WLAN application outdoors might lead to interference issues with existing radio services.

CAUTION: Fixed outdoor installations for WiGig application (57–66 GHz frequency band) are excluded for all countries reflected in the matrix.

Radio frequency bands and maximum power levels (select products only)

Radio Technology	Maximum Transmit Power EIRP (mW)
Bluetooth; 2,4 GHz	100
NFC; 13,56 MHz	10
RFID; 125 kHz/13,56 MHz	Less than 1
Wireless HD; 60 GHz	Less than 10000
WLAN Wi-Fi 802.11x; 2,4 GHz	100
WLAN Wi-Fi 802.11x; 5 GHz	200
WWAN 4G LTE; 700/800/900/1800/2100/2600 MHz	200
WWAN 3G UTMS; 900/2100 MHz	250
WWAN 2G GSM GPRS EDGE; 900 MHz	2000
WWAN 2G GSM GPRS EDGE; 1800 MHz	1000
WiGig 802.11ad; 60 GHz	316
Wireless Charging Qi; 110kHz - 205 kHz	Less than 1
NOTE: Use only HP-supported software drivers and correct country settings to ensure compliance.	

European telephone network declaration (Modem/Fax)

The product herewith complies with the requirements of the applicable Directive and carries the CE marking accordingly. However, due to differences between the individual PSTNs provided in different countries/regions, the approval does not, of itself, give an unconditional assurance of successful operation on every PSTN network termination point. In the event of problems, you should contact your equipment supplier in the first instance.

This equipment has been designed to work with analogue DTMF Networks. This equipment may have internetworking difficulties in PSTN networks that only support Pulse Dialing. Please consult with your network operator for further assistance.

Ergonomics notice

Germany

A computer system comprising HP brand products meets the applicable ergonomic requirements if all affected constituent products bear the "GS" approval mark, for example Business Desktop PC, keyboard, PC-mouse and monitor.

Germany (Deutscher text)

Ein aus HP Produkten bestehendes Computersystem erfüllt die anwendbaren ergonomischen Anforderungen, wenn alle verwendeten Komponenten das „GS“ Zeichen tragen, wie z. B. Business Desktop PC, Tastatur, PC-Maus und Bildschirm.

Japan notice

V-2 規定適合の場合

この装置は，クラスB情報技術装置です。この装置は，家庭環境で使用することを目的としていますが，この装置がラジオやテレビジョン受信機に近接して使用されると，受信障害を引き起こすことがあります。
取扱説明書に従って正しい取り扱いをして下さい。 VCCI－B

VCCI32-1 規定適合の場合

この装置は、クラスB機器です。この装置は、住宅環境で使用することを目的としていますが、この装置がラジオやテレビジョン受信機に近接して使用されると、受信障害を引き起こすことがあります。
取扱説明書に従って正しい取り扱いをして下さい。 VCCI－B

5GHz 帯を使用する特定無線設備は屋内使用に限られています。この機器を屋外で使用することは電波法で禁じられています。

Japan power cord notice

製品には、同梱された電源コードをお使い下さい。
同梱された電源コードは、他の製品では使用出来ません。

Wireless LAN and Bluetooth certification markings

この機器は、技術基準適合証明または工事設計認証を受けた無線設備を搭載しています

If this device contains radio equipment, it is certified radio equipment.

Some products may use electronic regulatory labels (e-labels). To view the certification mark and numbers on an e-label, please refer to the previous “Accessing regulatory labels” section.

一部の製品では、電子規定ラベル（e ラベル）が使用されています。e ラベルの技適マークと認証番号を確認するには、「規定ラベルの確認」の項目をご覧ください

Mexico notice

Declaración para México

La operación de este equipo está sujeta a las siguientes dos condiciones: (1) es posible que este equipo o dispositivo no cause interferencia perjudicial y (2) este equipo o dispositivo debe aceptar cualquier interferencia, incluyendo la que pueda causar su operación no deseada.

If your product is provided with wireless accessories such as a keyboard or mouse and you need to identify the model of the accessory, refer to the label included on that accessory.

South Korea notices

무선적용제품

해당 무선설비가 전파혼신 가능성이 있으므로 인명안전과 관련된 서비스는 할 수 없음 (무선모듈 제품이 설치되어 있는 경우).

몸 가까이에서 장치를 작동할 경우, 비금속 저장 액세서리를 사용하여 장치와 몸 사이에 2.5cm 이상의 거리를 유지하십시오.

Thailand WWAN wireless notice

เครื่องโทรคมนาคมและอุปกรณ์นี้ มีความสอดคล้องตามมาตรฐานหรือข้อกำหนดของ กสทช.

(This telecommunication equipment conforms to the requirements of NBTC.)

เครื่องวิทยุคมนาคมนี้มีระดับการแผ่คลื่นแม่เหล็กไฟฟ้าสอดคล้องตามมาตรฐานความปลอดภัยต่อสุขภาพของมนุษย์จากการใช้เครื่องวิทยุคมนาคมที่คณะกรรมการกิจการโทรคมนาคมแห่งชาติประกาศกำหนด

This radio communication equipment has the electromagnetic field strength in compliance with the Safety Standard for the Use of Radio communication Equipment on Human Health announced by the National Telecommunications Commission.

Taiwan NCC notices

Wireless LAN 802.11a devices

在5.25G ~5.35G頻帶內操作之無線
資訊傳輸設備僅適於室內使用

Wireless LAN 802.11 devices/Bluetooth devices/Short range devices

低功率電波輻射性電機管理辦法

第十二條 經型式認證合格之低功率射頻電機，非經許可，公司、商號或使用者均不得擅自變更頻率、加大功率或變更原設計之特性及功能。

第十四條 低功率射頻電機之使用不得影響飛航安全及干擾合法通信；經發現有干擾現象時，應立即停用，並改善至無干擾時方得繼續使用。

前項合法通信，指依電信規定作業之無線電信。低功率射頻電機須忍受合法通信或工業、科學及醫療用電波輻射性電機設備之干擾。

Airline travel notice

Use of electronic equipment aboard commercial aircraft is at the discretion of the airline.

User-replaceable battery notices

When a battery has reached the end of its useful life, do not dispose of the battery in general household waste. Follow the local laws and regulations in your area for computer battery disposal.

HP encourages customers to recycle used electronic hardware, HP original print cartridges, and rechargeable batteries. For more information about recycling programs, refer to the HP website at http://www.hp.com/recycle.

For information about removing a user-replaceable battery, refer to the user guide included with the product.

Factory-sealed battery notices

The battery[ies] in this product cannot be easily replaced by users themselves. Removing or replacing the battery could affect your warranty coverage. If a battery is no longer holding a charge, contact support.

When a battery has reached the end of its useful life, do not dispose of the battery in general household waste. Follow the local laws and regulations in your area for battery disposal.

Laser compliance

⚠ **WARNING!** Use of controls or adjustments, or performance of procedures other than those specified in the laser product installation guide, may result in hazardous radiation exposure. To reduce the risk of exposure to hazardous radiation:

- Do not try to open the module enclosure. There are no user-serviceable components inside.
- Do not operate controls, make adjustments, or perform procedures to the laser device other than those specified in the laser product installation guide.
- Allow only authorized service providers to repair the unit.

This product may be provided with an optical storage device (for example, a CD or DVD drive) and/or a fiber optic transceiver. Each of these devices that contain a laser is classified as a Class 1 Laser Product in accordance with IEC/EN 60825-1 and meets the requirements for safety of that standard.

Each laser product complies with US FDA regulations of 21 CFR 1040.10 and 1040.11 or complies with those regulations except for deviations pursuant to Laser Notice No. 50 dated June 24, 2007.

3 Safety notices for notebook and tablet computers

WARNING! To reduce the risk of serious injury, read the *Safety & Comfort Guide*. It describes proper workstation setup, posture, and health and work habits for computer users, and provides important electrical and mechanical safety information. This guide is located on the Web at http://www.hp.com/ergo and on the Documentation CD that is included with the product.

Heat-related safety warning notice

WARNING! To reduce the possibility of heat-related injuries or of overheating the computer, do not place the computer directly on your lap or obstruct the computer air vents. Use the computer only on a hard, flat surface. Do not allow another hard surface, such as an adjoining optional printer, or a soft surface, such as pillows or rugs or clothing, to block airflow. Also, do not allow the AC adapter to contact the skin or a soft surface, such as pillows or rugs or clothing, during operation. The computer and the AC adapter comply with the user-accessible surface temperature limits defined by the International Standard for Safety of Information Technology Equipment (IEC/EN 60950-1).

Potential safety conditions notice

If you notice any of the following conditions (or if you have other safety concerns), do not use the computer: crackling, hissing, or popping sound, or a strong odor or smoke coming from the computer. It is normal for these conditions to appear when an internal electronic component fails in a safe and controlled manner. However, these conditions may also indicate a potential safety issue. Do not assume it is a safe failure. Turn off the computer, disconnect it from its power source, and contact technical support for assistance.

Battery notices

WARNING! Risk of explosion if battery is replaced by an incorrect type. Dispose of used batteries according to the instructions.

WARNING! To reduce the risk of fire or burns, do not disassemble, crush, or puncture; do not short external contacts; do not dispose of in fire or water.

WARNING! Keep new and used batteries away from children.

WARNING! To reduce potential safety issues, only the battery provided with the computer, a replacement battery provided by HP, or a compatible battery purchased as an accessory from HP should be used with the computer. Fast charging may not be available for non-compatible or non-HP batteries.

WARNING! Do not ingest battery, a Chemical Burn Hazard.

WARNING! This product contains a coin/button cell battery. If the coin/button cell battery is swallowed, it can cause severe internal burns in just 2 hours and can lead to death.

WARNING! If the battery compartment does not close securely, stop using the product and keep it away from children.

WARNING! If you think batteries might have been swallowed or placed inside any part of the body, seek immediate medical attention.

WARNING! Leaving a battery in an extremely high temperature surrounding environment can result in an explosion or the leakage of flammable liquid or gas.

WARNING! A battery subjected to extremely low air pressure may result in an explosion or the leakage of flammable liquid or gas.

Headset and earphone volume level notice

WARNING! To prevent possible hearing damage, do not listen at high volume levels for long periods.

Adjustment of the volume control as well as the equalizer to other settings than the center position may increase the ear-/headphones output voltage and therefore the sound pressure level. The use of factors influencing the ear-/headphones output other than those specified by the manufacturer (e.g. operating system, equalizer software, firmware, driver) may increase the ear-/headphones output voltage and therefore the sound pressure level.

Power cord notices

WARNING! To reduce the risk of electric shock or damage to the equipment:

- Plug the power cord into an AC outlet that is easily accessible at all times.
- Disconnect power from the computer by unplugging the power cord from the AC outlet.
- If provided with a 3-pin attachment plug on the power cord, plug the cord into a grounded (earthed) 3-pin outlet. Do not disable the power cord grounding pin, for example, by attaching a 2-pin adapter. The grounding pin is an important safety feature.

WARNING! To reduce potential safety issues, only the AC adapter provided with the computer, a replacement AC adapter provided by HP, or an AC adapter purchased as an accessory from HP should be used with the computer.

Brazil notice

Este equipamento deve ser conectado obrigatoriamente em tomada de rede de energia elétrica que possua aterramento (três pinos), conforme a norma nbr abnt 5410,visando a segurança dos usuários contra choques elétricos.

Cleaning the keyboard

WARNING! To reduce the risk of electric shock or damage to internal components, do not use a vacuum cleaner attachment to clean the keyboard. A vacuum cleaner can deposit household debris on the keyboard surface. Clean the keyboard regularly to prevent keys from sticking and to remove dust, lint, and particles that can become trapped beneath the keys. A can of compressed air with a straw extension can be used to blow air around and under the keys to loosen and remove debris.

Travel notice

WARNING! To reduce the risk of electric shock, fire, or damage to the equipment, do not attempt to power the computer with a voltage converter kit sold for appliances.

China safety notices

China: Altitude notice

Altitude warning for products not certified for use in >5000 m

Icon	Description
	仅适用于海拔 2000m 以下地区安全使用 – or – 仅适用于海拔 2000 米以下地区安全使用

China: Tropical warning notice

Tropical warning for products not certified for use in tropical regions.

Icon	Description
	仅适用于非热带气候条件下安全使用

Norway and Sweden: Cable grounding notice for products with a TV tuner

⚠ **CAUTION:** To reduce potential safety issues, use a galvanic isolator when connecting to a cable distribution system.

使用過度恐傷害視力

注意事項:

(1) 使用 30 分鐘請休息 10 分鐘。

(2) 未滿 2 歲幼兒不看螢幕，2 歲以上每天看螢幕不要超過 1 小時。

4 Safety notices for desktops, thin clients, personal workstations, all-in-ones, and point-of-sale terminals

Important safety information

WARNING! To reduce the risk of serious injury, read the *Safety & Comfort Guide*. It describes proper workstation setup, posture, and health and work habits for computer users, and provides important electrical and mechanical safety information. This guide is located on the Web at http://www.hp.com/ergo and on the Documentation CD that is included with the product.

To reduce the risk of electric shock or damage to the equipment:

- Plug the power cord into an AC outlet that is easily accessible at all times.
- Disconnect power from the computer by unplugging the power cord from the AC outlet.
- If provided with a 3-pin attachment plug on the power cord, plug the cord into a grounded (earthed) 3-pin outlet. Do not disable the power cord grounding pin, for example, by attaching a 2-pin adapter. The grounding pin is an important safety feature.

The computer may be heavy; be sure to use ergonomically correct lifting procedures when moving it.

Install the computer near an AC outlet. The AC power cord is your computer's main AC disconnecting device and must be easily accessible at all times. For your safety, the power cord provided with your computer has a grounded plug. Always use the power cord with a properly grounded wall outlet, to avoid the risk of electrical shock.

To reduce the possibility of an electric shock from the telephone network, plug your computer into the AC outlet before connecting it to the telephone line. Also, disconnect the telephone line before unplugging your computer from the AC power outlet.

Always disconnect the modem cord from the telephone system before installing or removing your computer cover.

Do not operate the computer with the cover removed.

For your safety, always unplug the computer from its power source and from any telecommunications systems (such as telephone lines), networks, or modems before performing any service procedures. Failure to do so may result in personal injury or equipment damage. Hazardous voltage levels are inside the power supply and modem of this product.

As a safety precaution, if the system power load exceeds the specific configuration's capacities, the system may temporarily disable some USB ports.

CAUTION: If your computer is provided with a voltage select switch for use in a 115 or 230 V power system, the voltage select switch has been pre-set to the correct voltage setting for use in the particular country/region where it was initially sold. Changing the voltage select switch to the incorrect position can damage your computer and void any implied warranty.

This product has not been evaluated for connection to an "IT" power system (an AC distribution system with no direct connection to earth, according to IEC/EN 60950-1).

Installation conditions

See installation instructions before connecting this equipment to the input supply.

WARNING! The equipment must be provided with a proper AC protective earth (PE) ground connection.

Energized and moving parts may be inside the computer. Disconnect power to the equipment before removing the enclosure. Replace and secure the enclosure before re-energizing the equipment.

Battery notices

WARNING! The product may contain an internal lithium manganese dioxide, vanadium pentoxide, or alkaline battery or battery pack. There is risk of fire and burns if the battery pack is not handled properly.

WARNING! Do not attempt to recharge the battery.

WARNING! Do not expose to temperatures higher than 60° C (140° F).

WARNING! Do not disassemble, crush, puncture, short external contacts, or dispose of in fire or water.

WARNING! Risk of explosion if battery is replaced by an incorrect type. Dispose of used batteries according to the instructions.

WARNING! Replace only with the HP spare designated for this product.

WARNING! Do not ingest battery, a Chemical Burn Hazard.

WARNING! This product contains a coin/button cell battery. If the coin/button cell battery is swallowed, it can cause severe internal burns in just 2 hours and can lead to death.

WARNING! Keep new and used batteries away from children.

WARNING! If the battery compartment does not close securely, stop using the product and keep it away from children.

WARNING! If you think batteries might have been swallowed or placed inside any part of the body, seek immediate medical attention.

WARNING! Leaving a battery in an extremely high temperature surrounding environment can result in an explosion or the leakage of flammable liquid or gas.

WARNING! A battery subjected to extremely low air pressure may result in an explosion or the leakage of flammable liquid or gas.

Icon	Description
	Batteries, battery packs, and accumulators should not be disposed of together with the general household waste. In order to forward them to recycling or proper disposal, please use the public collection system or return them to HP, an authorized HP partner, or their agents.

Icon	Description
	The Taiwan EPA requires dry battery manufacturing or importing firms, in accordance with Article 15 of the Waste Disposal Act, to indicate the recovery marks on the batteries used in sales, giveaways, or promotions. Contact a qualified Taiwanese recycler for proper battery disposal.

Fan notices

WARNING!

WARNING! Keep body parts away from moving parts.

WARNING! Keep body parts away from fan blades.

WARNING! Keep body parts out of the motion path.

Headset and earphone volume level notice

WARNING! To prevent possible hearing damage, do not listen at high volume levels for long periods.

Adjustment of the volume control as well as the equalizer to other settings than the center position may increase the ear-/headphones output voltage and therefore the sound pressure level. The use of factors influencing the ear-/headphones output other than those specified by the manufacturer (e.g. operating system, equalizer software, firmware, driver) may increase the ear-/headphones output voltage and therefore the sound pressure level.

Laser safety

For products equipped with optical drives or fiber optic transceivers.

This product may be provided with an optical storage device (i.e., CD or DVD drive) and/or fiber optic transceiver. These contain lasers and are classified as Class 1 Laser Products in accordance with the standard IEC/EN 60825-1 and comply with its requirements.

Each laser product complies with US FDA Regulations of 21 CFR 1040.10 and 1040.11 or complies with those regulations except for deviations pursuant to Laser Notice No. 50, dated June 24, 2007.

WARNING! Use of controls or adjustments or performance of procedures other than those specified herein or in the laser product's installation guide may result in hazardous radiation exposure. To reduce the risk of exposure to hazardous radiation:

- Do not try to open the module enclosure. There are no user-serviceable components inside.
- Do not operate controls, make adjustments, or perform procedures to the laser device other than those specified herein.
- Allow only HP Authorized Service technicians to repair the unit.

Power supply and power cord set requirements

Power supply class I grounding requirements

For protection from fault currents, the equipment shall be connected to a grounding terminal. Plug the system power cord into an AC outlet that provides a ground connection. Substitute cords may not provide adequate fault protection. Only use the power cord supplied with this product or an HP Inc. authorized replacement.

Brazil notice

Este equipamento deve ser conectado obrigatoriamente em tomada de rede de energia elétrica que possua aterramento (três pinos), conforme a norma nbr abnt 5410,visando a segurança dos usuários contra choques elétricos.

Denmark

Apparatets stikprop skal tilsluttes en stikkontakt med jord, som giver forbindelse til stikproppens jord.

Finland

Laite on liitettävä suojakoskettimilla varustettuun pistorasiaan.

Norway

Apparatet må tilkoples jordet stikkontakt.

Sweden

Apparaten skall anslutas till jordat uttag.

Power supply requirements

The power supplies on some products have external power switches. The voltage select switch feature on the product permits it to operate from any line voltage between 100-127 or 200-240 volts AC. Power supplies on those products that do not have external power switches are equipped with internal circuits that sense the incoming voltage and automatically switch to the proper voltage.

For safety reasons, use only the AC adapter provided with the unit or an authorized replacement adapter from HP Inc. Replacement part numbers may be found at http://www.hp.com/cgi-bin/hpsupport/index.pl.

For use in Norway

This product is also designed for an IT power system with phase-to-phase voltage 230V.

Power cord set requirements

The power cord set received with the product meets the requirements for use in the country where the equipment was originally purchased. Use only the power cord provided with the unit or an authorized replacement power cord from HP Inc. or an approved HP Inc. source. Replacement part numbers may be found at http://www.hp.com/cgi-bin/hpsupport/index.pl.

Power cord sets for use in other countries must meet the requirements of the country where you use the product. For more information on power cord set requirements, contact your authorized HP dealer, reseller, or service provider.

⚠ **WARNING!** Do not use power cords from other products.

Mismatched power cords may result in a shock and fire hazard.

The requirements listed below are applicable to all countries:

1. The power cord must be approved by an acceptable accredited agency responsible for evaluation in the country where the power cord set will be installed.
2. The length of the power cord must be between 1.8 m (6 feet) and 3.6 m (12 feet). For a power cord 2.0 m (6.56 feet) or less, the diameter of the wire must be a minimum of 0.75 mm^2 or 18AWG. If the power cord is longer than 2.0 m (6.56 feet), the diameter of the wire must be a minimum of 1.0 mm^2 or 16AWG.

The power cord should be routed so that it is not likely to be walked on or pinched by items placed upon it or against it. Particular attention should be paid to the plug, electrical outlet, and the point where the cord exits from the product.

WARNING! Do not operate this product with a damaged power cord set. If the power cord set is damaged in any manner, replace it immediately. Damaged cords may result in user exposure to hazards.

Japan power cord requirements

For use in Japan, use only the power cord received with this product.

CAUTION: Do not use the power cord received with this product on any other products.

Pinch hazard

WARNING! Observe pinch hazard areas. Keep fingers away from closing parts.

TV antenna connectors protection

External television antenna grounding

If an outside antenna or cable system is connected to the product, be sure the antenna or cable system is electrically grounded so as to provide some protection against voltage surges and built-up static charges. Article 810 of the National Electrical Code, ANSI/NFPA 70, provides information with regard to proper electrical grounding of the mast and supporting structure, grounding of the lead-in wire to an antenna-discharge unit, size of grounding conductors, location of antenna-discharge unit, connection to grounding electrodes, and requirements for the grounding electrode.

Lightning protection

For added protection of any product during a lightning storm, or when it is left unattended and unused for long periods of time, unplug the product from the wall outlet and disconnect the antenna or cable system. This will prevent damage to the product from lightning and power line surges.

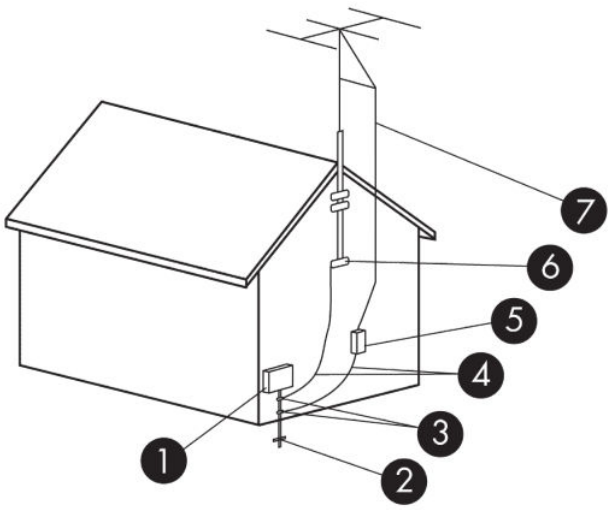

Table 4-1 Antenna Grounding

Reference	Grounding Component
1	Electric Service Equipment
2	Power Service Grounding Electrode System (NEC Art 250, Part III)
3	Ground Clamps
4	Grounding Conductors (NEC Section 810.21)
5	Antenna Discharge Unit (NEC Section 810.20)
6	Ground Clamp
7	Antenna Lead-in Wire

Note to CATV system installer

This reminder is provided to call the CATV systems installer's attention to section 820.93 of the National Electric Code, which provides guidelines for proper grounding and in particular, specify that the Coaxial cable shield shall be connected to grounding system of the building, as close to the point of cable entry as practical.

China safety notices

HP 工作站使用安全手册

使用须知

欢迎使用惠普工作站，为了您及仪器的安全，请您务必注意如下事项：

1. 仪器要和地线相接，要使用有正确接地插头的电源线，使用中国国家规定的 220V 电源。
2. 避免高温和尘土多的地方，否则易引起仪器内部部件的损坏。
3. 避免接近高温，避免接近直接热源，如直射太阳光、暖气等其它发热体。
4. 不要有异物或液体落入机内，以免部件短路。
5. 不要将磁体放置于仪器附近。

警告

为防止火灾或触电事故，请不要将该机放置于淋雨或潮湿处

如果您按照以上步骤操作时遇到了困难，或想了解其它产品性能，请在以下网页上寻找相关信息：http://www.hp.com.cn

或联系我们

中国惠普有限公司
地址：北京朝阳区建国路 112 号中国惠普大厦
电话：010-65643888

China: Altitude notice

Altitude warning for products not certified for use in >5000 m

Icon	Description
≤2100m	仅适用于海拔 2000m 以下地区安全使用 – or – 仅适用于海拔 2000 米以下地区安全使用

China: Tropical warning notice

Tropical warning for products not certified for use in tropical regions.

Icon	Description
	仅适用于非热带气候条件下安全使用

Germany acoustics notice

Sound pressure level (LpA) is far below 70dB(A) (operator position, normal operation, according to ISO 7779) Product noise emission data can be found in the product related “IT ECO Declarations” at Internet address: http://www.hp.com/go/ted

Schalldruckpegel (LpA) ist weit unterhalb 70 dB(A) (Benutzerposition, normaler Betrieb, nach ISO 7779) Die Schallemissionswerte der Produkte können in den produktbezogenen “IT ECO Declarations” auf folgender Internet Adresse gefunden werden: http://www.hp.com/go/ted

Norway and Sweden: Cable grounding notice for products with a TV tuner

⚠ **CAUTION:** To reduce potential safety issues, use a galvanic isolator when connecting to a cable distribution system.

使用過度恐傷害視力

注意事項:

(1) 使用 30 分鐘請休息 10 分鐘。

(2) 未滿 2 歲幼兒不看螢幕，2 歲以上每天看螢幕不要超過 1 小時。

5 Environmental notices for notebook and tablet computers

This chapter provides country- and region-specific environmental notices and compliance information. Some of these notices may not apply to your product.

Electronic hardware, packaging and battery recycling

HP encourages customers to recycle used electronic hardware, HP original print cartridges packaging, and rechargeable batteries. For more information about recycling programs, go to http://www.hp.com/recycle.

For information about recycling the product in Japan, refer to http://www.hp.com/jp/hardwarerecycle/.

Disposal of waste equipment by users

This symbol means do not dispose of your product with your other household waste. Instead, you should protect human health and the environment by handing over your waste equipment to a designated collection point for the recycling of waste electrical and electronic equipment. For more information, please contact your household waste disposal service or go to http://www.hp.com/recycle.

Brazil alkaline battery disposal

Icon	Description
Não descarte o produto eletrônico em lixo comum	Este produto eletroeletrônico e seus componentes não daven ser descartados no lixo comum, pois embora estejam em conformidade com padrões mundiais de restrição a substâncias nocivas, podem conter, ainda que em quantidades mínimas, substâncias impactantes ao meio ambiente. Ao final da vida útil deste produto, o usuário deverá entregá-lo à HP. A não observância dessa orientação sujeitará o infrator às sanções previstas em lei. Após o uso, as pilhas e/ou baterias dos produtos HP deverão ser entregues ao estabelecimento comercial ou rede de assistência técnica autorizada pela HP. Para maiores informações , inclusive sobre os pontos de recebimento, acesse: http://www.hp.com.br/reciclar

Brazil hardware recycling information

Icon	Description
	Este produto eletroeletrônico e seus componentes não daven ser descartados no lixo comum, pois embora estejam em conformidade com padrões mundiais de restrição a substâncias nocivas, podem conter, ainda que em quantidades mínimas, substâncias impactantes ao meio ambiente. Ao final da vida útil deste produto, o usuário deverá entregá-lo à HP. A não observância dessa orientação sujeitará o infrator às sanções previstas em lei. Após o uso, as pilhas e/ou baterias dos produtos HP deverão ser entregues ao estabelecimento comercial ou rede de assistência técnica autorizada pela HP.

Icon	Description
Não descarte o produto eletrônico em lixo comum	Para maiores informações , inclusive sobre os pontos de recebimento, acesse: http://www.hp.com.br/reciclar

ENERGY STAR® Certification (select models only)

ENERGY STAR is a U.S. Environmental Protection Agency voluntary program that helps businesses and individuals save money and protect our climate through superior energy efficiency. Products that earn the ENERGY STAR prevent greenhouse gas emissions by meeting strict energy efficiency criteria or requirements set by the U.S. Environmental Protection Agency. As an ENERGY STAR Partner, HP Inc. has followed the U.S. EPA's enhanced product certification process to ensure that products marked with the ENERGY STAR logo are ENERGY STAR certified per the applicable ENERGY STAR guidelines. The following logo appears on all ENERGY STAR-certified computers:

A key ENERGY STAR requirement for computer products is power management features that significantly reduce energy consumption when the product is not in use. Power management allows a computer to automatically enter a low power "sleep" mode, or other low power mode, after a defined period of inactivity. The power management features have been preset as follows when the computer is operating on AC power:

Computer type	Time to activate display sleep mode	Time to activate computer sleep mode (minutes)	Resuming from sleep mode
Notebooks, Mobile Workstations	Less than or equal to 15 minutes (varies by model)	Less than or equal to 30 minutes (varies by model)	Product will exit sleep mode when the power/sleep button is pressed. If Wake-on-Lan (WOL) is enabled, the system can resume from sleep in response to a network signal.
Tablets/Slates	Less than or equal to 1 minute	Not applicable	Not applicable

For computers that support an always-on, always-connected use profile where internet access is available (such as tablets and slates), alternative low power modes - such as Short or Long Idle modes (as defined in the ENERGY STAR Computer Program Requirements) are provided that consume very little power (</= 10 Watts) and when applicable, maximize product battery life. These alternative low power modes are dynamic, with the display sleep mode activated within 1 minute of user inactivity.

The computer exits Sleep when the power/Sleep button is pressed. When the Wake On LAN (WOL) feature is enabled, the computer can also exit Sleep in response to a network signal.

Additional information on the potential energy and financial savings of the power management feature can be found on the EPA ENERGY STAR Power Management website at http://www.energystar.gov/powermanagement.

Additional information on the ENERGY STAR program and its environmental benefits are available on the EPA ENERGY STAR website at http://www.energystar.gov.

ENERGY STAR and the ENERGY STAR mark are registered trademarks owned by the U.S. Environmental Protection Agency.

Chemical substances

HP is committed to providing our customers with information about the chemical substances in our products as needed to comply with legal requirements such as REACH (Regulation EC No 1907/2006 of the European Parliament and the Council). A chemical information report for this product can be found at http://www.hp.com/go/reach.

China environmental notices

微型计算机电源声明书

能耗信息说明

惠普公司对笔记本电脑提供能耗信息说明，更多信息请登陆

http://www.hp.com/hpinfo/globalcitizenship/environment/productdata/chinasepa.html

回收信息说明

惠普公司对废弃的电子计算机（笔记本电脑）提供回收服务，更多信息请登陆

http://www.hp.com.cn/hardwarerecycle

环境标志信息:

微型计算机(台式计算机, 笔记本电脑等)在中国环境标志认证产品范围内 ,环境标志表明该产品不仅品质合格,而且在生产,使用和处理过程中都符合特定的环境保护要求,与同类产品相比,具有低毒少害,节约资源等环境优势,在国家环保部网站 (http://www.sepa.gov.cn)可以浏览环境标志的信息,此外获得中国环境标志认证的产品售出后 3 年内均可在各服务中心选择维修或更换部件， 也可通过更换更高性能的零部件或模块实现硬件升级

特别提醒:

如您需要确认本产品处于零能耗状态， 请按下电源关闭按钮， 并将插头从电源插座断开。

China PC energy label

In accordance with “The Regulation of the Implementation on China Energy Label for Microcomputers”, this microcomputer has an Energy Efficiency Label. The energy efficiency grade, TEC (Typical Energy Consumption), and product category presented on the label are determined and calculated according to the standard GB28380-2012.

1. Energy Efficiency Grades

   The grade is determined by the standard with the calculation of base consumption level with the sum of all the allowances for additional components such as main memory and graphics card. For products of any grade, the TEC should not exceed the value specified in the following table:

Product Type		TEC (kilowatt hour)		
		Grade 1	Grade 2	Grade 3
Desktop microcomputer, AIO	Category A	98.0+∑Efa	148.0+∑Efa	198.0+∑Efa
	Category B	125.0+∑Efa	175.0+∑Efa	225.0+∑Efa
	Category C	159.0+∑Efa	209.0+∑Efa	259.0+∑Efa
	Category D	184.0+∑Efa	234.0+∑Efa	284.0+∑Efa

Product Type		TEC (kilowatt hour)		
Portable Computer	Category A	20.0+∑Efa	35.0+∑Efa	45.0+∑Efa
	Category B	26.0+∑Efa	45.0+∑Efa	65.0+∑Efa
	Category C	54.5+∑Efa	75.0+∑Efa	123.5+∑Efa
NOTE: ∑Efa is the sum of power factor of product additional functions.				

2. Typical Energy Consumption

   The energy consumption figure presented on the label is the data measured with the representative configuration that covers all the configurations in the registration unit which is selected according to "The Regulation of the Implementation on China Energy Label for Microcomputers". Thus, actual energy consumption of this specific microcomputer may not be the same as the TEC data presented in the label.

3. Product Category

   The product category is determined by the standard according to the microcomputer's configuration. The categorization of products complies with the regulations in the following table:

Product Type	Configuration Description	
	Desktop microcomputer, AIO	Portable Computer
Category A	The desktop microcomputer and AIO whose configuration is out of the scope of Category B, C, and D	The portable computer whose configuration is out of the scope of Category B and C
Category B	CPU physical core number of 2, and system memory of not less than 2GB	A Discrete GPU
Category C	CPU physical core number of over 2, with at least one of the following features: **1.** System memory of not less than 2 GB **2.** A Discrete GPU	The product that has a CPU physical core number of not less than 2, system memory of not less than 2GB, A Discrete GPU with Frame Buffer Width not less than 128-bit.
Category D	CPU physical core number of not less than 4, with at least one of the following features: **1.** System memory of not less than 4 GB **2.** A Discrete GPU with Frame Buffer Width not less than 128-bit	

For more details on the specification, please refer to the standard GB28380-2012.

本机根据《微型计算机能源效率标识实施规则》的要求加施中国能效标识。能效标识中显示的能效等级、典型能源消耗和产品类型均根据《微型计算机能效限定值及能效等级》（GB28380-2012）的要求确定。对上述标识内容的说明如下：

1. 能效等级

微型计算机的能效等级由基础能源消耗值和附加功能功耗因子之和决定。微型计算机能效各等级的典型能源消耗应不大于下表的规定

微型计算机类型			能源消耗（千瓦时）		
			1	2	3
	台式微型计算机及	A 类	98.0+∑Efa	148.0+∑Efa	198.0+∑Efa
一体机		B 类	125.0+∑Efa	175.0+∑Efa	225.0+∑Efa
		C 类	159.0+∑Efa	209.0+∑Efa	259.0+∑Efa
		D 类	184.0+∑Efa	234.0+∑Efa	284.0+∑Efa
	便携式	A 类	20.0+∑Efa	35.0+∑Efa	45.0+∑Efa
计算机		B 类	26.0+∑Efa	45.0+∑Efa	65.0+∑Efa
		C 类	54.5+∑Efa	75.0+∑Efa	123.5+∑Efa
注：ΣEfa 为微型计算机附加功能功耗因子之和					

2. 典型能源消耗

典型能源消耗值代表一个备案单元中，符合《微型计算机能源效率标识实施规则》要求的代表性规格型号产品的数值。因此，本机的典型能源消耗值可能与其所加施的能效标识中所示的典型能源消耗值不一致。

3. 产品类型

产品类型根据微型计算机的配置确定。参见下表：

类型	配置说明	
	台式微型计算机及一体机	便携式计算机
A 类	下列 B 类、C 类、D 类配置以外的台式微型计算机及一体机	下列 B 类、C 类配置以外的便携式计算机
B 类	中央处理器（CPU）物理核心数为 2，系统内存大于等于 2GB	具有独立图形显示单元（GPU）
C 类	中央处理器（CPU）物理核心数大于 2，且至少具有以下特征中的一条 a. a）系统内存大于等于 2GB； b. 独立图形显示单元（GPU）	中央处理器（CPU）物理核心数大于等于 2，系统内存大于等于 2GB，具有独立图形显示单元（GPU）且显存位宽大于等于 128 位.
D 类	中央处理器（CPU）物理核心数大于等于 4，且至少具有以下特征中的一条： a. 系统内存大于等于 4GB； b. 具有独立图形显示单元（GPU）且显存位宽大于等于 128 位	

关于标识内容的更详细技术信息，请参考《微型计算机能效限定值及能效等级》（GB28380-2012）

China restriction of hazardous substances (RoHS)

The Table of Hazardous Substances/Elements and their Content

As required by China's Management Methods for Restricted Use of Hazardous Substances in Electrical and Electronic Products

	Hazardous Substances					
Part Name	**Lead (Pb)**	**Mercury (Hg)**	**Cadmium (Cd)**	**Hexavalent Chromium (Cr(VI))**	**Polybrominated biphenyls (PBB)**	**Polybrominated diphenyl ethers (PBDE)**
Battery	X	0	0	0	0	0
Cables	X	0	0	0	0	0
Camera	X	0	0	0	0	0
Chassis/Other	X	0	0	0	0	0
Flash memory card reader	X	0	0	0	0	0
Floppy disk drive	X	0	0	0	0	0
Hard disk drive	X	0	0	0	0	0
Headphones	X	0	0	0	0	0
I/O PCAs	X	0	0	0	0	0
Keyboard	X	0	0	0	0	0
Liquid crystal display (LCD) panel	X	0	0	0	0	0
Media (CD/DVD/floppy)	0	0	0	0	0	0
Memory	X	0	0	0	0	0
Motherboard, processor, heat sinks	X	0	0	0	0	0
Mouse	X	0	0	0	0	0
Optical disk drive	X	0	0	0	0	0
Optional docking device	X	0	0	0	0	0
Power adapter	X	0	0	0	0	0
Power pack	X	0	0	0	0	0
Power supply	X	0	0	0	0	0
Remote control	X	0	0	0	0	0
Smart card/Java™ card reader	X	0	0	0	0	0
Speakers, external	X	0	0	0	0	0
TV tuner	X	0	0	0	0	0

	Hazardous Substances					
Part Name	**Lead (Pb)**	**Mercury (Hg)**	**Cadmium (Cd)**	**Hexavalent Chromium (Cr(VI))**	**Polybrominated biphenyls (PBB)**	**Polybrominated diphenyl ethers (PBDE)**
USB flash memory drive	X	O	O	O	O	O
USB hub	X	O	O	O	O	O
Web camera	X	O	O	O	O	O
Wireless receiver	X	O	O	O	O	O
Wireless cards	X	O	O	O	O	O

This form has been prepared in compliance with the provisions of SJ/T 11364.

O: Indicates that the content of said hazardous substance in all of the homogenous materials in the component is within the limits required by GB/T 26572.

X: Indicates that the content of said hazardous substance exceeds the limits required by GB/T 26572 in at least one homogenous material in the component.

All parts named in this table with an “X” are in compliance with the European Union’s RoHS Legislation.

NOTE: The referenced Environmental Protection Use Period Marking was determined according to normal operating use conditions of the product such as temperature and humidity.

产品中有害物质或元素的名称及含量

根据中国《电器电子产品有害物质限制使用管理办法》

	有害物质					
部件名称	**铅 (Pb)**	**汞 (Hg)**	**镉 (Cd)**	**六价铬 (Cr(VI))**	**多溴联苯 (PBB)**	**多溴二苯醚 (PBDE)**
电池	X	O	O	O	O	O
线缆	X	O	O	O	O	O
摄像头	X	O	O	O	O	O
机箱/其他	X	O	O	O	O	O
闪存读卡器	X	O	O	O	O	O
软盘驱动器	X	O	O	O	O	O
硬盘驱动器	X	O	O	O	O	O
耳机	X	O	O	O	O	O
I/O PCA	X	O	O	O	O	O
键盘	X	O	O	O	O	O
液晶显示器 (LCD) 面板	X	O	O	O	O	O
介质（CD/DVD/软盘）	O	O	O	O	O	O
内存	X	O	O	O	O	O

	有害物质					
部件名称	铅 (Pb)	汞 (Hg)	镉 (Cd)	六价铬 (Cr(VI))	多溴联苯 (PBB)	多溴二苯醚 (PBDE)
主板、处理器、散热器	X	0	0	0	0	0
鼠标	X	0	0	0	0	0
光盘驱动器	X	0	0	0	0	0
对接设备选件	X	0	0	0	0	0
电源适配器	X	0	0	0	0	0
电源	X	0	0	0	0	0
电源组	X	0	0	0	0	0
投影仪	X	0	0	0	0	0
遥控器	X	0	0	0	0	0
智能卡/Java™ 读卡器	X	0	0	0	0	0
扬声器（外置）	X	0	0	0	0	0
电视调谐器	X	0	0	0	0	0
USB 闪存驱动器	X	0	0	0	0	0
USB 集线器	X	0	0	0	0	0
网络摄像头	X	0	0	0	0	0
无线接收器	X	0	0	0	0	0
无线网卡	X	0	0	0	0	0

本表格依据 SJ/T 11364 的规定编制。

0：表示该有害物质在该部件所有均质材料中的含量均在 GB/T 26572 规定的限量要求以下。

X：表示该有害物质至少在该部件的某一均质材料中的含量超出 GB/T 26572 规定的限量要求。

此表中所有名称中含 “X” 的部件均符合欧盟 RoHS 立法。

注：环保使用期限的参考标识取决于产品正常工作的温度和湿度等条件

台灣有害物質限制使用管理辦法 (RoHS)

限用物質含有情況標示聲明書

Declaration of the Presence Condition of the Restricted Substances Marking

限用物質及其化學符號						
Restricted substances and its chemical symbols						
單元 Unit	鉛 Lead (Pb)	汞 Mercury (Hg)	鎘 Cadmium (Cd)	六價鉻 Hexavalent chromium (CR^{+6})	多溴聯苯 Polybrominated biphenyls (PBB)	多溴二苯醚 Polybrominated diphenyl ethers (PBDE)
纜線 Cables	—	O	O	O	O	O

限用物質及其化學符號						
Restricted substances and its chemical symbols						
機殼/其他 Chassis/Other	—	O	O	O	O	O
輸入/輸出印刷電路組件 I/O PCAs	—	O	O	O	O	O
液晶顯示器 (LCD) 面板 Liquid crystal display (LCD) panel	—	O	O	O	O	O
記憶體 Memory	—	O	O	O	O	O
主機板、處理器、散熱器 Motherboard, processor, heat sinks	—	O	O	O	O	O
電源組 Power pack	—	O	O	O	O	O
電源供應器 Power supply	—	O	O	O	O	O
儲存裝置 Storage Devices	—	O	O	O	O	O
無線裝置 Wireless Devices	—	O	O	O	O	O

備考 1： 「超出 0.1 %」及「超出 0.01 %」係指限用物質之百分比含量超出百分比含量基準值。

Note 1: "Exceeding 0.1 wt %" and "exceeding 0.01 wt %" indicate that the percentage content of the restricted substance exceeds the reference percentage value of presence condition.

備考 2： 「O」係指該項限用物質之百分比含量未超出百分比含量基準值。

Note 2: "O" indicates that the percentage content of the restricted substance does not exceed the percentage of reference value of presence.

備考 3： 「—」係指該項限用物質為排除項目。

Note 3: The "—" indicates that the restricted substance corresponds to the exemption.

若要存取產品的最新使用指南或手冊， 請前往 http://www.hp.com/support 。選取搜尋您的產品， 然後依照畫面上的指示繼續執行。

To access the latest user guides or manuals for your product, go to http://www.hp.com/support. Select **Find your product**, and then follow the on-screen instructions.

India restriction of hazardous substances (RoHS)

This product, as well as its related consumables and spares, complies with the reduction in hazardous substances provisions of the "India E-waste Rule 2016." It does not contain lead, mercury, hexavalent chromium, polybrominated biphenyls or polybrominated diphenyl ethers in concentrations exceeding 0.1

weight % and 0.01 weight % for cadmium, except where allowed pursuant to the exemptions set in Schedule 2 of the Rule.

Information for European Union Commission Regulation 1275/2008

To locate product power consumption data, including when the product is in networked standby with all wired network ports connected and wireless devices connected, refer to section P14 “Additional information” of the product IT ECO Declaration at http://www.hp.com/hpinfo/globalcitizenship/environment/productdata/itecodesktop-pc.html.

Where applicable, activate and deactivate a wireless network using the instructions included in the product user guide or the operating system. Information is also available at http://www.hp.com/support.

IT ECO declarations

For notebook PCs, go to http://www.hp.com/hpinfo/globalcitizenship/environment/productdata/iteconotebook-o.html.

Japan restriction of hazardous substances (RoHS)

2008 年、日本における製品含有表示方法、JISC0950 が公示されました。製造事業者は、2006 年 7 月 1 日 以降に販売される電気・電子機器の特定化学物質の含有に付きまして情報提供を義務付けられました。製品の部材表示に付きましては、

http://www.hp.com/go/jisc0950

を参照してください

A Japanese regulatory requirement, defined by specification JIS C 0950, 2008, mandates that manufacturers provide Material Content Declarations for certain categories of electronic products offered for sale after July 1, 2006.

To view the JIS C 0950 material declaration for this product, visit http://www.hp.com/go/jisc0950.

Mexico Sustainable Energy Use Law

This product has been labeled in compliance with the Mexico Sustainable Energy Use Law requiring disclosure of power consumption in the normal use (idle mode) and standby modes. Your product is one of many configurations in this model family; the idle mode power consumption of your specific configuration may vary from the information on the label. Actual power consumption of your product may be higher or lower than the value reported on the Mexico product energy label due to factors such as configuration (components and modules chosen) and usage (tasks being performed, software installed and running, etc.).

Turkey EEE regulation

Türkiye Cumhuriyeti: EEE Yönetmeliğine Uygundur

Perchlorate material—special handling may apply

See http://www.dtsc.ca.gov/hazardouswaste/perchlorate.

This product's real-time clock battery or coin cell battery may contain perchlorate and may require special handling when recycled or disposed of in California.

TCO Certified

This section applies only to products bearing the TCO Certified logo.

TCO DEVELOPMENT

Congratulations!

This product is TCO Certified – for Sustainable IT

TCO Certified is an international third party sustainability certification for IT products. TCO Certified ensures that the manufacture, use and recycling of IT products reflect environmental, social and economic responsibility. Every TCO Certified product model is verified by an accredited independent test laboratory.

This product has been verified to meet all the criteria in TCO Certified, including:

Corporate Social Responsibility
Socially responsible production - working conditions and labor law in manufacturing country
Energy Efficiency
Energy efficiency of product and power supply. Energy Star compliant, where applicable
Environmental Management System
Manufacturer must be certified according to either ISO 14001 or EMAS
Minimization of Hazardous Substances
Limits on cadmium, mercury, lead & hexavalent chromium including requirements for mercury-free products, halogenated substances and hazardous flame retardants
Design for Recycling
Coding of plastics for easy recycling. Limit on the number of different plastics used.
Product Lifetime, Product Take Back
Minimum one-year product warranty. Minimum three-year availability of spare parts. Product takeback
Packaging
Limits on hazardous substances in product packaging. Packaging prepared for recycling
Ergonomic, User-centered design
Visual ergonomics in products with a display. Adjustability for user comfort (displays, headsets)
Acoustic performance – protection against sound spikes (headsets) and fan noise (projectors, computers)
Ergonomically designed keyboard (notebooks)
Electrical Safety, minimal electro-magnetic Emissions
Third Party Testing
All certified product models have been tested in an independent, accredited laboratory.

A detailed criteria set is available for download at www.tcodevelopment.com, where you can also find a searchable database of all TCO Certified IT products.

TCO Development, the organization behind TCO Certified, has been an international driver in the field of Sustainable IT for 20 years. Criteria in TCO Certified are developed in collaboration with scientists, experts, users and manufacturers. Organizations around the world rely on TCO Certified as a tool to help them reach their sustainable IT goals. We are owned by TCO, a non-profit organization representing office workers. TCO Development is headquartered in Stockholm, Sweden, with regional presence in North America and Asia.

For more information, please visit
www.tcodevelopment.com

TCO Certified Edge

This section applies only to products bearing the TCO Certified Edge logo.

TCO DEVELOPMENT

Congratulations!

This product is TCO Certified – for Sustainable IT

TCO Certified is an international third party sustainability certification for IT products. TCO Certified ensures that the manufacture, use and recycling of IT products reflect environmental, social and economic responsibility. Every TCO Certified product model is verified by an accredited independent test laboratory.

Along with meeting all requirements in TCO Certified, this product also meets the exclusive TCO Certified Edge certification, recognizing best in class products in a specific sustainability attribute.

Summary of TCO Certified Criteria:

Corporate Social Responsibility
Socially responsible production - working conditions and labor law in manufacturing country
Energy Efficiency
Energy efficiency of product and power supply. Energy Star compliant, where applicable
Environmental Management System
Manufacturer must be certified according to either ISO 14001 or EMAS
Minimization of Hazardous Substances
Limits on cadmium, mercury, lead & hexavalent chromium including requirements for mercury-free products, halogenated substances and hazardous flame retardants
Design for Recycling
Coding of plastics for easy recycling. Limit on the number of different plastics used.
Product Lifetime, Product Take Back
Minimum one-year product warranty. Minimum three-year availability of spare parts. Product takeback
Packaging
Limits on hazardous substances in product packaging. Packaging prepared for recycling
Ergonomic, User-centered design
Visual ergonomics in products with a display. Adjustability for user comfort (displays, headsets)
Acoustic performance – protection against sound spikes (headsets) and fan noise (projectors, computers)
Ergonomically designed keyboard (notebooks)
Electrical Safety, minimal electro-magnetic Emissions
Third Party Testing
All certified product models have been tested in an independent, accredited laboratory.

A detailed criteria set is available for download at www.tcodevelopment.com, where you can also find a searchable database of all TCO Certified IT products.

TCO Development, the organization behind TCO Certified, has been an international driver in the field of Sustainable IT for 20 years. Criteria in TCO Certified are developed in collaboration with scientists, experts, users and manufacturers. Organizations around the world rely on TCO Certified as a tool to help them reach their sustainable IT goals. We are owned by TCO, a non-profit organization representing office workers. TCO Development is headquartered in Stockholm, Sweden, with regional presence in North America and Asia.

For more information, please visit
www.tcodevelopment.com

6 Environmental notices for desktops, thin clients, personal workstations, all-in-ones, and point-of-sale terminals

This chapter provides country- and region-specific environmental notices and compliance information. Some of these notices may not apply to your product.

Electronic hardware, packaging and battery recycling

HP encourages customers to recycle used electronic hardware, HP original print cartridges packaging, and rechargeable batteries. For more information about recycling programs, go to http://www.hp.com/recycle.

For information about recycling the product in Japan, refer to http://www.hp.com/jp/hardwarerecycle/.

Disposal of waste equipment by users

Icon	Description
	This symbol means do not dispose of your product with your other household waste. Instead, you should protect human health and the environment by handing over your waste equipment to a designated collection point for the recycling of waste electrical and electronic equipment. For more information, please contact your household waste disposal service or go to http://www.hp.com/recycle.

Brazil alkaline battery disposal

Icon	Description
Não descarte o produto eletrônico em lixo comum	Este produto eletroeletrônico e seus componentes não daven ser descartados no lixo comum, pois embora estejam em conformidade com padrões mundiais de restrição a substâncias nocivas, podem conter, ainda que em quantidades mínimas, substâncias impactantes ao meio ambiente. Ao final da vida útil deste produto, o usuário deverá entregá-lo à HP. A não observância dessa orientação sujeitará o infrator às sanções previstas em lei. Após o uso, as pilhas e/ou baterias dos produtos HP deverão ser entregues ao estabelecimento comercial ou rede de assistência técnica autorizada pela HP. Para maiores informações , inclusive sobre os pontos de recebimento, acesse: http://www.hp.com.br/reciclar

Brazil hardware recycling information

Icon	Description
	Este produto eletroeletrônico e seus componentes não daven ser descartados no lixo comum, pois embora estejam em conformidade com padrões mundiais de restrição a substâncias nocivas, podem conter, ainda que em quantidades mínimas, substâncias impactantes ao meio ambiente. Ao final da vida útil deste produto, o usuário deverá entregá-lo à HP. A não observância dessa orientação sujeitará o infrator às sanções previstas

Icon	Description
Não descarte o produto eletrônico em lixo comum	em lei. Após o uso, as pilhas e/ou baterias dos produtos HP deverão ser entregues ao estabelecimento comercial ou rede de assistência técnica autorizada pela HP. Para maiores informações , inclusive sobre os pontos de recebimento, acesse: http://www.hp.com.br/reciclar

ENERGY STAR® Certification (select models only)

ENERGY STAR is a U.S. Environmental Protection Agency voluntary program that helps businesses and individuals save money and protect our climate through superior energy efficiency. Products that earn the ENERGY STAR prevent greenhouse gas emissions by meeting strict energy efficiency criteria or requirements set by the U.S. Environmental Protection Agency. As an ENERGY STAR Partner, HP Inc. has followed the U.S. EPA's enhanced product certification process to ensure that products marked with the ENERGY STAR logo are ENERGY STAR certified per the applicable ENERGY STAR guidelines. The following logo appears on all ENERGY STAR-certified computers:

A key ENERGY STAR requirement for computer products is power management features that significantly reduce energy consumption when the product is not in use. Power management allows a computer to automatically enter a low power "sleep" mode, or other low power mode, after a defined period of inactivity. The power management features have been preset as follows when the computer is operating on AC power:

Computer type	Time to activate display sleep mode	Time to activate computer sleep mode (minutes)	Resuming from sleep mode
Desktops, Integrated Desktops, Workstations	Less than or equal to 15 minutes (varies by model)	Less than or equal to 30 minutes (varies by model)	Product will exit sleep mode when user interacts with any input device, including the mouse or keyboard. If Wake-on-Lan (WOL) is enabled, the system can resume from sleep in response to a network signal.
Thin clients	Less than or equal to 15 minutes (varies by model)	Less than or equal to 30 minutes when sleep mode is supported by the operating system (varies by model)	When sleep mode is supported by operating system product will exit sleep mode when user interacts with any input device, including the mouse or keyboard. If Wake-on-Lan (WOL) is enabled, the system can resume from sleep in response to a network signal.

The computer exits Sleep when the power/Sleep button is pressed. When the Wake On LAN (WOL) feature is enabled, the computer can also exit Sleep in response to a network signal.

Additional information on the potential energy and financial savings of the power management feature can be found on the EPA ENERGY STAR Power Management website at http://www.energystar.gov/powermanagement.

Additional information on the ENERGY STAR program and its environmental benefits are available on the EPA ENERGY STAR website at http://www.energystar.gov.

ENERGY STAR and the ENERGY STAR mark are registered trademarks owned by the U.S. Environmental Protection Agency.

Chemical substances

HP is committed to providing our customers with information about the chemical substances in our products as needed to comply with legal requirements such as REACH (Regulation EC No. 1907/2006 of the European Parliament and the Council). A chemical information report for this product can be found at http://www.hp.com/go/reach.

Mercury statement

This statement applies to all-in-one computers with built-in display panels that do not use LED backlighting.

This HP product may contain the following material that might require special handling at end-of-life:

- Mercury in the fluorescent lamp in the display LCD

Disposal of mercury can be regulated because of environmental considerations. For disposal or recycling information, please contact your local authorities or the Electronic Industries Alliance (EIA) (http://www.eiae.org).

Perchlorate material–special handling may apply

The computer's real-time clock battery may contain perchlorate and may require special handling when recycled or disposed of in California. See http://www.dtsc.ca.gov/hazardouswaste/perchlorate/.

China environmental notices

微型计算机电源声明书

能耗信息说明

惠普公司对笔记本电脑提供能耗信息说明，更多信息请登陆

http://www.hp.com/hpinfo/globalcitizenship/environment/productdata/chinasepa.html

回收信息说明

惠普公司对废弃的电子计算机（笔记本电脑）提供回收服务，更多信息请登陆

http://www.hp.com.cn/hardwarerecycle

环境标志信息:

微型计算机(台式计算机, 笔记本电脑等)在中国环境标志认证产品范围内 ,环境标志表明该产品不仅品质合格,而且在生产,使用和处理过程中都符合特定的环境保护要求,与同类产品相比,具有低毒少害,节约资源等环境优势,在国家环保部网站 (http://www.sepa.gov.cn)可以浏览环境标志的信息,此外获得中国环境标志认证的产品售出后 3 年内均可在各服务中心选择维修或更换部件， 也可通过更换更高性能的零部件或模块实现硬件升级

特别提醒:

如您需要确认本产品处于零能耗状态， 请按下电源关闭按钮， 并将插头从电源插座断开。

China PC energy label

In accordance with “The Regulation of the Implementation on China Energy Label for Microcomputers”, this microcomputer has an Energy Efficiency Label. The energy efficiency grade, TEC (Typical Energy Consumption), and product category presented on the label are determined and calculated according to the standard GB28380-2012.

1. Energy Efficiency Grades

   The grade is determined by the standard with the calculation of base consumption level with the sum of all the allowances for additional components such as main memory and graphics card. For products of any grade, the TEC should not exceed the value specified in the following table:

Product Type		TEC (kilowatt hour)		
		Grade 1	Grade 2	Grade 3
Desktop microcomputer, AIO	Category A	98.0+∑Efa	148.0+∑Efa	198.0+∑Efa
	Category B	125.0+∑Efa	175.0+∑Efa	225.0+∑Efa
	Category C	159.0+∑Efa	209.0+∑Efa	259.0+∑Efa
	Category D	184.0+∑Efa	234.0+∑Efa	284.0+∑Efa
Portable Computer	Category A	20.0+∑Efa	35.0+∑Efa	45.0+∑Efa
	Category B	26.0+∑Efa	45.0+∑Efa	65.0+∑Efa
	Category C	54.5+∑Efa	75.0+∑Efa	123.5+∑Efa

NOTE: ∑Efa is the sum of power factor of product additional functions.

2. Typical Energy Consumption

   The energy consumption figure presented on the label is the data measured with the representative configuration that covers all the configurations in the registration unit which is selected according to “The Regulation of the Implementation on China Energy Label for Microcomputers". Thus, actual energy consumption of this specific microcomputer may not be the same as the TEC data presented in the label.

3. Product Category

   The product category is determined by the standard according to the microcomputer’s configuration. The categorization of products complies with the regulations in the following table:

Product Type	Configuration Description	
	Desktop microcomputer, AIO	Portable Computer
Category A	The desktop microcomputer and AIO whose configuration is out of the scope of Category B, C, and D	The portable computer whose configuration is out of the scope of Category B and C
Category B	CPU physical core number of 2, and system memory of not less than 2 GB	A Discrete GPU
Category C	CPU physical core number of over 2, with at least one of the following features: 1. System memory of not less than 2 GB	The product that has a CPU physical core number of not less than 2, system memory of not less than 2GB, A Discrete GPU with Frame Buffer Width not less than 128-bit.

Product Type	Configuration Description
	2. A Discrete GPU
Category D	CPU physical core number of not less than 4, with at least one of the following features: **1.** System memory of not less than 4 GB **2.** A Discrete GPU with Frame Buffer Width not less than 128-bit

For more details on the specification, please refer to the standard GB28380-2012.

本机根据《微型计算机能源效率标识实施规则》的要求加施中国能效标识。能效标识中显示的能效等级、典型能源消耗和产品类型均根据《微型计算机能效限定值及能效等级》（GB28380-2012）的要求确定。对上述标识内容的说明如下：

1. 能效等级

微型计算机的能效等级由基础能源消耗值和附加功能功耗因子之和决定。微型计算机能效各等级的典型能源消耗应不大于下表的规定

微型计算机类型			能源消耗（千瓦时）		
			1	2	3
	台式微型计算机及	A 类	98.0+ΣEfa	148.0+ΣEfa	198.0+ΣEfa
一体机		B 类	125.0+ΣEfa	175.0+ΣEfa	225.0+ΣEfa
		C 类	159.0+ΣEfa	209.0+ΣEfa	259.0+ΣEfa
		D 类	184.0+ΣEfa	234.0+ΣEfa	284.0+ΣEfa
	便携式	A 类	20.0+ΣEfa	35.0+ΣEfa	45.0+ΣEfa
计算机		B 类	26.0+ΣEfa	45.0+ΣEfa	65.0+ΣEfa
		C 类	54.5+ΣEfa	75.0+ΣEfa	123.5+ΣEfa
注：ΣEfa 为微型计算机附加功能功耗因子之和					

2. 典型能源消耗

典型能源消耗值代表一个备案单元中，符合《微型计算机能源效率标识实施规则》要求的代表性规格型号产品的数值。因此，本机的典型能源消耗值可能与其所加施的能效标识中所示的典型能源消耗值不一致。

3. 产品类型

产品类型根据微型计算机的配置确定。参见下表：

类型	配置说明	
	台式微型计算机及一体机	便携式计算机
A 类	下列 B 类、C 类、D 类配置以外的台式微型计算机及一体机	下列 B 类、C 类配置以外的便携式计算机
B 类	中央处理器（CPU）物理核心数为 2，系统内存大于等于 2GB	具有独立图形显示单元（GPU）
C 类	中央处理器（CPU）物理核心数大于 2，且至少具有以下特征中的一条 a. a）系统内存大于等于 2GB； b. 独立图形显示单元（GPU）	中央处理器（CPU）物理核心数大于等于 2，系统内存大于等于 2GB，具有独立图形显示单元（GPU）且显存位宽大于等于 128 位.
D 类	中央处理器（CPU）物理核心数大于等于 4，且至少具有以下特征中的一条： a. 系统内存大于等于 4GB； b. 具有独立图形显示单元（GPU）且显存位宽大于等于 128 位	

关于标识内容的更详细技术信息，请参考《微型计算机能效限定值及能效等级》（GB28380-2012）

China restriction of hazard substances (ROHS)

The Table of Hazardous Substances/Elements and their Content

As required by China's Management Methods for Restricted Use of Hazardous Substances in Electrical and Electronic Products

	Hazardous Substances					
Part Name	**Lead (Pb)**	**Mercury (Hg)**	**Cadmium (Cd)**	**Hexavalent Chromium (Cr(VI))**	**Polybrominated biphenyls (PBB)**	**Polybrominated diphenyl ethers (PBDE)**
Battery	X	0	0	0	0	0
Cables	X	0	0	0	0	0
Camera	X	0	0	0	0	0
Chassis/Other	X	0	0	0	0	0
Fan	X	0	0	0	0	0
Flash memory card reader	X	0	0	0	0	0
Floppy disk drive	X	0	0	0	0	0
Hard disk drive	X	0	0	0	0	0
Headphones	X	0	0	0	0	0
Heat sink	X	0	0	0	0	0
I/O PCAs	X	0	0	0	0	0
Keyboard	X	0	0	0	0	0
Liquid crystal display (LCD) panel	X	0	0	0	0	0
Media (CD/DVD/floppy)	0	0	0	0	0	0
Memory	X	0	0	0	0	0
Motherboard, processor, heat sinks	X	0	0	0	0	0
Mouse	X	0	0	0	0	0
Optical disk drive	X	0	0	0	0	0
Optional docking device	X	0	0	0	0	0
Power adapter	X	0	0	0	0	0
Power supply	X	0	0	0	0	0
Projector	X	0	0	0	0	0
Remote control	X	0	0	0	0	0
Smart card/Java™ card reader	X	0	0	0	0	0

	Hazardous Substances					
Part Name	**Lead (Pb)**	**Mercury (Hg)**	**Cadmium (Cd)**	**Hexavalent Chromium (Cr(VI))**	**Polybrominated biphenyls (PBB)**	**Polybrominated diphenyl ethers (PBDE)**
Solid-state drives	X	0	0	0	0	0
Speakers, external	X	0	0	0	0	0
Stylus	X	0	0	0	0	0
Touch mat	X	0	0	0	0	0
TV tuner	X	0	0	0	0	0
USB flash memory drive	X	0	0	0	0	0
USB hub	X	0	0	0	0	0
Web camera	X	0	0	0	0	0
Wireless receiver	X	0	0	0	0	0
Wireless cards	X	0	0	0	0	0
3D Capture Stage/ Turntable	X	0	0	0	0	0

This form has been prepared in compliance with the provisions of SJ/T 11364.

0: Indicates that the content of said hazardous substance in all of the homogenous materials in the component is within the limits required by GB/T 26572.

X: Indicates that the content of said hazardous substance exceeds the limits required by GB/T 26572 in at least one homogenous material in the component.

All parts named in this table with an “X” are in compliance with the European Union’s RoHS Legislation.

NOTE: The referenced Environmental Protection Use Period Marking was determined according to normal operating use conditions of the product such as temperature and humidity.

产品中有害物质或元素的名称及含量

根据中国《电器电子产品有害物质限制使用管理办法》

	有害物质					
部件名称	**铅 (Pb)**	**汞 (Hg)**	**镉 (Cd)**	**六价铬 (Cr(VI))**	**多溴联苯 (PBB)**	**多溴二苯醚 (PBDE)**
电池	X	0	0	0	0	0
线缆	X	0	0	0	0	0
摄像头	X	0	0	0	0	0
机箱/其他	X	0	0	0	0	0
风扇	X	0	0	0	0	0
闪存读卡器	X	0	0	0	0	0

	有害物质					
部件名称	铅 (Pb)	汞 (Hg)	镉 (Cd)	六价铬 (Cr(VI))	多溴联苯 (PBB)	多溴二苯醚 (PBDE)
软盘驱动器	X	0	0	0	0	0
硬盘驱动器	X	0	0	0	0	0
耳机	X	0	0	0	0	0
散热器	X	0	0	0	0	0
I/O PCA	X	0	0	0	0	0
键盘	X	0	0	0	0	0
液晶显示器 (LCD) 面板	X	0	0	0	0	0
介质（CD/DVD/软盘）	0	0	0	0	0	0
内存	X	0	0	0	0	0
主板、处理器、散热器	X	0	0	0	0	0
鼠标	X	0	0	0	0	0
光驱	X	0	0	0	0	0
对接设备选件	X	0	0	0	0	0
电源适配器	X	0	0	0	0	0
电源	X	0	0	0	0	0
投影仪	X	0	0	0	0	0
遥控器	X	0	0	0	0	0
智能卡/Java™ 读卡器	X	0	0	0	0	0
固态驱动器	X	0	0	0	0	0
扬声器（外置）	X	0	0	0	0	0
触控笔	X	0	0	0	0	0
触控板	X	0	0	0	0	0
电视调谐器	X	0	0	0	0	0
USB 闪存驱动器	X	0	0	0	0	0
USB 集线器	X	0	0	0	0	0
网络摄像头	X	0	0	0	0	0
无线接收器	X	0	0	0	0	0
无线网卡	X	0	0	0	0	0
3D 捕获台/转盘	X	0	0	0	0	0

本表格依据 SJ/T 11364 的规定编制。

0：表示该有害物质在该部件所有均质材料中的含量均在 GB/T 26572 规定的限量要求以下。

X：表示该有害物质至少在该部件的某一均质材料中的含量超出 GB/T 26572 规定的限量要求。

此表中所有名称中含 “X” 的部件均符合欧盟 RoHS 立法。

	有害物质					
部件名称	铅 (Pb)	汞 (Hg)	镉 (Cd)	六价铬 (Cr(VI))	多溴联苯 (PBB)	多溴二苯醚 (PBDE)
注：环保使用期限的参考标识取决于产品正常工作的温度和湿度等条件						

台灣有害物質限制使用管理辦法 (RoHS)

限用物質含有情況標示聲明書

Declaration of the Presence Condition of the Restricted Substances Marking

限用物質及其化學符號						
Restricted substances and its chemical symbols						
單元 Unit	鉛 Lead (Pb)	汞 Mercury (Hg)	鎘 Cadmium (Cd)	六價鉻 Hexavalent chromium (CR +6)	多溴聯苯 Polybrominated biphenyls (PBB)	多溴二苯醚 Polybrominated diphenyl ethers (PBDE)
纜線 Cables	—	O	O	O	O	O
機座/其他 Chassis/Other	—	O	O	O	O	O
輸入/輸出印刷電路組件 I/O PCAs	—	O	O	O	O	O
液晶顯示器 (LCD) 面板 Liquid crystal display (LCD) panel (for AIO only)	—	O	O	O	O	O
記憶體 Memory	—	O	O	O	O	O
主機板、處理器、散熱器 Motherboard, processor, heat sinks	—	O	O	O	O	O
電源供應器 Power supply	—	O	O	O	O	O
儲存裝置 Storage Devices	—	O	O	O	O	O
備考 1：「超出 0.1 %」及「超出 0.01 %」係指限用物質之百分比含量超出百分比含量基準值。 Note 1: "Exceeding 0.1 wt %" and "exceeding 0.01 wt %" indicate that the percentage content of the restricted substance exceeds the reference percentage value of presence condition. 備考 2：「O」係指該項限用物質之百分比含量未超出百分比含量基準值。 Note 2: "O" indicates that the percentage content of the restricted substance does not exceed the percentage of reference value of presence. 備考 3：「—」係指該項限用物質為排除項目。 Note 3: The "—" indicates that the restricted substance corresponds to the exemption.						

若要存取產品的最新使用指南或手冊，請前往 http://www.hp.com/support 。選取搜尋您的產品，然後依照畫面上的指示繼續執行。

To access the latest user guides or manuals for your product, go to http://www.hp.com/support. Select **Find your product**, and then follow the on-screen instructions.

India restriction of hazardous substances (RoHS)

This product, as well as its related consumables and spares, complies with the reduction in hazardous substances provisions of the "India E-waste Rule 2016." It does not contain lead, mercury, hexavalent chromium, polybrominated biphenyls or polybrominated diphenyl ethers in concentrations exceeding 0.1 weight % and 0.01 weight % for cadmium, except where allowed pursuant to the exemptions set in Schedule 2 of the Rule.

Information for European Union Commission Regulation 1275/2008

To locate product power consumption data, including when the product is in networked standby with all wired network ports connected and wireless devices connected, refer to section P14 “Additional information” of the product IT ECO Declaration at http://www.hp.com/hpinfo/globalcitizenship/environment/productdata/itecodesktop-pc.html.

Where applicable, activate and deactivate a wireless network using the instructions included in the product user guide or the operating system. Information is also available at http://www.hp.com/support.

IT ECO declarations

Desktop PCs and Thin Clients

http://www.hp.com/hpinfo/globalcitizenship/environment/productdata/itecodesktop-pc.html?jumpid=reg_R1002_USEN

Workstations

http://www.hp.com/hpinfo/globalcitizenship/environment/productdata/itecoworkstatio.html

Japan restriction of hazardous substances (RoHS)

2008 年、日本における製品含有表示方法、JISC0950 が公示されました。製造事業者は、2006 年 7 月 1 日 以降に販売される電気・電子機器の特定化学物質の含有に付きまして情報提供を義務付けられました。製品の部材表示に付きましては、

http://www.hp.com/go/jisc0950

を参照してください

A Japanese regulatory requirement, defined by specification JIS C 0950, 2008, mandates that manufacturers provide Material Content Declarations for certain categories of electronic products offered for sale after July 1, 2006.

To view the JIS C 0950 material declaration for this product, visit http://www.hp.com/go/jisc0950.

Mehiški zakon o uporabi trajnostne energije

Ley para el Aprovechamiento Sustentable de la Energía de México

Se ha etiquetado este producto en conformidad con la Ley para el Aprovechamiento Sustentable de la Energía de México, que requiere la divulgación del consumo de energía del modo de uso normal (modo inactivo) y del modo de espera. Su producto es una de las muchas configuraciones de esta familia de modelos; el consumo de energía del modo inactivo de su configuración específica puede diferir de la información de la etiqueta. El consumo real de energía de su producto puede ser mayor o menor que el valor informado en la etiqueta de

energía de producto para México a causa de factores como la configuración (componentes y módulos seleccionados) y el uso (tareas que se están efectuando, software instalado y en ejecución, etc.).

NOTE: Esta ley no es aplicable a los workstations.

This product has been labeled in compliance with the Mexico Sustainable Energy Use Law requiring disclosure of power consumption in the normal use (idle mode) and standby modes. Your product is one of many configurations in this model family; the idle mode power consumption of your specific configuration may vary from the information on the label. Actual power consumption of your product may be higher or lower than the value reported on the Mexico product energy label due to factors such as configuration (components and modules chosen) and usage (tasks being performed, software installed and running, etc.).

NOTE: Workstations are not labeled because the law is not applicable to the workstation product category.

Turkey EEE regulation

Türkiye Cumhuriyeti: EEE Yönetmeliğine Uygundur

TCO Certified

This section applies only to products bearing the TCO Certified logo.

TCO DEVELOPMENT

Congratulations!

This product is TCO Certified – for Sustainable IT

TCO Certified is an international third party sustainability certification for IT products. TCO Certified ensures that the manufacture, use and recycling of IT products reflect environmental, social and economic responsibility. Every TCO Certified product model is verified by an accredited independent test laboratory.

This product has been verified to meet all the criteria in TCO Certified, including:

Corporate Social Responsibility
Socially responsible production - working conditions and labor law in manufacturing country
Energy Efficiency
Energy efficiency of product and power supply. Energy Star compliant, where applicable
Environmental Management System
Manufacturer must be certified according to either ISO 14001 or EMAS
Minimization of Hazardous Substances
Limits on cadmium, mercury, lead & hexavalent chromium including requirements for mercury-free products, halogenated substances and hazardous flame retardants
Design for Recycling
Coding of plastics for easy recycling. Limit on the number of different plastics used.
Product Lifetime, Product Take Back
Minimum one-year product warranty. Minimum three-year availability of spare parts. Product takeback
Packaging
Limits on hazardous substances in product packaging. Packaging prepared for recycling
Ergonomic, User-centered design
Visual ergonomics in products with a display. Adjustability for user comfort (displays, headsets)
Acoustic performance – protection against sound spikes (headsets) and fan noise (projectors, computers)
Ergonomically designed keyboard (notebooks)
Electrical Safety, minimal electro-magnetic Emissions
Third Party Testing
All certified product models have been tested in an independent, accredited laboratory.

A detailed criteria set is available for download at www.tcodevelopment.com, where you can also find a searchable database of all TCO Certified IT products.

TCO Development, the organization behind TCO Certified, has been an international driver in the field of Sustainable IT for 20 years. Criteria in TCO Certified are developed in collaboration with scientists, experts, users and manufacturers. Organizations around the world rely on TCO Certified as a tool to help them reach their sustainable IT goals. We are owned by TCO, a non-profit organization representing office workers. TCO Development is headquartered in Stockholm, Sweden, with regional presence in North America and Asia.

For more information, please visit
www.tcodevelopment.com

TCO Certified Edge

This section applies only to products bearing the TCO Certified Edge logo.

TCO DEVELOPMENT

Congratulations!

This product is TCO Certified – for Sustainable IT

TCO Certified is an international third party sustainability certification for IT products. TCO Certified ensures that the manufacture, use and recycling of IT products reflect environmental, social and economic responsibility. Every TCO Certified product model is verified by an accredited independent test laboratory.

Along with meeting all requirements in TCO Certified, this product also meets the exclusive TCO Certified Edge certification, recognizing best in class products in a specific sustainability attribute.

Summary of TCO Certified Criteria:

Corporate Social Responsibility
Socially responsible production - working conditions and labor law in manufacturing country
Energy Efficiency
Energy efficiency of product and power supply. Energy Star compliant, where applicable
Environmental Management System
Manufacturer must be certified according to either ISO 14001 or EMAS
Minimization of Hazardous Substances
Limits on cadmium, mercury, lead & hexavalent chromium including requirements for mercury-free products, halogenated substances and hazardous flame retardants
Design for Recycling
Coding of plastics for easy recycling. Limit on the number of different plastics used.
Product Lifetime, Product Take Back
Minimum one-year product warranty. Minimum three-year availability of spare parts. Product takeback
Packaging
Limits on hazardous substances in product packaging. Packaging prepared for recycling
Ergonomic, User-centered design
Visual ergonomics in products with a display. Adjustability for user comfort (displays, headsets)
Acoustic performance – protection against sound spikes (headsets) and fan noise (projectors, computers)
Ergonomically designed keyboard (notebooks)
Electrical Safety, minimal electro-magnetic Emissions
Third Party Testing
All certified product models have been tested in an independent, accredited laboratory.

A detailed criteria set is available for download at www.tcodevelopment.com, where you can also find a searchable database of all TCO Certified IT products.

TCO Development, the organization behind TCO Certified, has been an international driver in the field of Sustainable IT for 20 years. Criteria in TCO Certified are developed in collaboration with scientists, experts, users and manufacturers. Organizations around the world rely on TCO Certified as a tool to help them reach their sustainable IT goals. We are owned by TCO, a non-profit organization representing office workers. TCO Development is headquartered in Stockholm, Sweden, with regional presence in North America and Asia.

For more information, please visit
www.tcodevelopment.com

Index

Symbols/Numerics

台灣對於危險物質的限制注意事項 43, 57
注意事項
台灣有害物質限制 43, 57

A

airline travel notice 8, 23
altitude notice 27, 34

B

battery 25, 29
battery notice 8, 23, 46, 48
battery recycling 36, 48
Brazil notice 3, 19, 26, 31

C

cable grounding notice 27, 35
Canada modem statement 12, 16
Canada notices 3, 19
China environmental notices 38, 50
China PC energy label 38, 51
China restriction of hazardous substances notice 41, 54

D

disposal notices
battery 46, 48
battery, user replacement 8, 23
equipment 36, 48
factory sealed battery 8, 23

E

electronic hardware and battery recycling 36, 48
ENERGY STAR certification 37, 49
environmental notices 36, 48
equipment disposal notice 36, 48
ergonomics notice 5, 21
European Union Commission Regulation 1275/2008 45, 58

F

fan notice 30
Federal Communications Commission
desktops, thin clients, and workstations notice 17
desktops, thin clients, workstations cables 18
desktops, thin clients, workstations modifications 18
notebook computers cables 2
notebook computers modifications 2
notebook computers notice 2

G

GS Notice 5, 21

H

headset and earphone volume level notice 26, 30

I

India restriction of hazardous substances notice 44, 58

J

Japan modem statement 12
Japan notice 6, 21
Japan power cord notice 13, 21, 32
Japan restriction of hazardous substances notice 45, 58

K

keyboard notice 26

L

labels, regulatory 1, 14
laser safety notice 9, 24, 30

M

Macrovision Corporation notice 13
maximum power levels 4, 20
Mexico Sustainable Energy Use Law 45
Mexico wireless notice 6, 22
modem notices 9, 15
modem statements
Canada 12, 16
Japan 12
New Zealand 12, 16
U.S. 9, 10, 15
modifications, desktops, thin clients, workstations
Federal Communications Commission 18
modifications, notebook computers
Federal Communications Commission 2

N

New Zealand modem statement 12, 16
notices
airline travel 8, 23
battery 8, 23, 25, 29, 46, 48
Brazil 3, 19, 26, 31
Canada 3, 19
China restriction of hazardous substances 41, 54
environmental 36, 48
equipment disposal 36, 48
ergonomics 5, 21
fan 30
headset and earphone volume level 26, 30
India restriction of hazardous substances 44, 58
Japan 6, 21
Japan power cord 13, 21, 32
Japan restriction of hazardous substances 45, 58
keyboard 26
laser safety 9, 24, 30
Macrovision Corporation 13
Mexico 6, 22
modem 9, 15
perchlorate material 45, 50
power cords 13, 26
Singapore 7
South Korea 7, 22
Taiwan 7, 23

Thailand WWAN wireless notice 7, 22
travel 26
notices, desktops, thin clients, and workstations
Federal Communications Commission 17
notices, notebook computers
Federal Communications Commission 2

P

power cord notice 13, 26

R

radio frequency bands 4, 20
recycling, electronic hardware and battery 36, 48

S

Singapore wireless notice 7
South Korea notice 7, 22

T

Taiwan notice 7, 23
TCO Certified Certification 46, 59
TCO Certified Edge Certification 47, 60
Thailand WWAN wireless notice 7, 22
travel notice 26
tropical warning notice 27, 34
TV tuner, cable grounding notice 27, 35

U

U.S. modem statement 9, 10, 15

V

voice support 13, 17
volume level notice, headset and earphone 26, 30

W

wireless LAN devices 3, 18, 19