S410 Series

USER MANUAL

Getac

TRADEMARKS

Getac is a trademark of Getac Technology Corporation.
The Bluetooth® word mark and logos are registered trademarks owned by Bluetooth SIG, Inc.
Thunderbolt is a trademark of Intel Corporation or its subsidiaries.
All brand and product names are trademarks or registered trademarks of their respective companies.

NOTE

The information in this manual is subject to change without notice.

Table of Contents

Chapter 1 Getting Started.....1
Getting the Computer Running.....2
Connecting to AC Power.....2
Turning On and Off the Computer.....3
Taking a Look at the Computer.....5
Front Components.....5
Rear Components.....6
Right-Side Components.....7
Left-Side Components.....8
Top-open Components.....8
Bottom Components.....10

Chapter 2 Operating Your Computer.....11
Using the Keyboard.....12
Typewriter Keys.....12
Cursor-Control Keys.....12
Numeric Keypad.....13
Function Keys.....13
Fn Key.....14
Hot Keys.....14
Windows Keys.....15
Using the Touchpad.....16
Configuring the Touchpad.....17
Using Network and Wireless Connections.....18
Using the LAN.....18
Using the WLAN.....19
Using the Bluetooth Feature.....20
Using the WWAN Feature (Optional).....21

Chapter 3 Managing Power.....23
AC Adapter.....24

Battery Pack 25
Charging the Battery Pack 25
Initializing the Battery Pack 26
Checking the Battery Level 26
Battery Low Signals and Actions 27
Replacing the Battery Pack 27
Power-Saving Tips 29

Chapter 4 Expanding Your Computer 30
Connecting Peripheral Devices 31
Connecting a USB Device 31
Connecting a Thunderbolt™ Device 31
Connecting USB Devices to the Rugged Connectors (Select Models Only) 32
Connecting a Monitor 33
Connecting a Serial Device 34
Connecting an Audio Device 34
Using Storage and Expansion Cards 35
Using Storage Cards 35
Using Smart Cards 36

Chapter 5 Using BIOS Setup 37
When and How to Use 38
Menu Descriptions 39
Information Menu 39
Main Menu 39
Advanced Menu 39
Security Menu 41
Boot Menu 42
Exit Menu 43

Chapter 6 Using Getac Software 44
G-Manager 45

Chapter 7 Care and Maintenance 46
Protecting the Computer 47
Using an Anti-Virus Strategy 47
Using the Cable Lock 47
Taking Care of the Computer 48
Location Guidelines 48
General Guidelines 48
Cleaning Guidelines 49
Battery Pack Guidelines 49
When Traveling 51

Chapter 8 Troubleshooting 52
Preliminary Checklist 53
Solving Common Problems 54
Battery Problems 54
Bluetooth Problems 54
Display Problems 55
Hardware Device Problems 55
Keyboard and Touchpad Problems 56
LAN Problems 56
Power Management Problems 56
Software Problems 57
Sound Problems 57
Startup Problems 58
WLAN Problems 58
Other Problems 59
Resetting the Computer 60
System Recovery 61
Using Windows RE 61
Using Recovery Partition 62

Appendix A Specifications 63

Appendix B Regulatory Information 65
Safety Notices 66
About the Battery 66
About the AC Adapter 69
Heat Related Concerns 70
North America 71
USA 71
Canada 73
User Notification of Take-back Service 74
Europe Marking and Compliance Notices 75
Statements of Compliance 75
Restriction of Hazardous Substances (RoHS) Directive 77
Declaration of Conformity 77
ENERGY STAR 78
About Battery and External Enclosure Replacement 79
Battery 79
External Enclosure 79

Chapter 1

Getting Started

This chapter first tells you step by step how to get the computer up and running. Then, you will find a section briefly introducing the external components of the computer.

Getting the Computer Running

Connecting to AC Power

CAUTION: Use only the AC adapter included with your computer. Using other AC adapters may damage the computer.

NOTE:

- The battery pack is shipped to you in power saving mode that protects it from charging/discharging. It will get out of the mode to be ready for use when you install the battery pack and connect AC power to the computer for the very first time.
- When the AC adapter is connected, it also charges the battery pack. For information on using battery power, see Chapter 3.

You must use AC power when starting up the computer for the very first time.

1. Plug the DC cord of the AC adapter to the power connector of the computer (❶).

2. Plug the female end of the AC power cord to the AC adapter and the male end to an electrical outlet (❷).

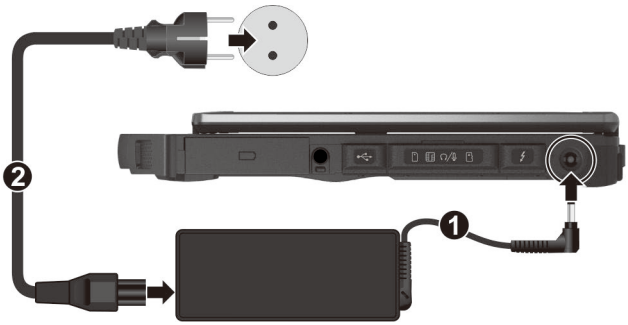

NOTE: The power cord type varies with countries. The look of your power cord and electrical outlet might not match the one shown in this document.

3. Power is being supplied from the electrical outlet to the AC adapter and onto your computer. Now, you are ready to turn on the computer.

Turning On and Off the Computer

Turning On

1. Open the top cover by pulling the cover latch and lifting up the cover. You can tilt the cover forward or backward for optimal viewing clarity.

2. Press the power button (⏻). The Windows operating system should start.

Turning Off

When you finish a working session, you can stop the system by turning off the power or leaving it in Sleep or Hibernation mode:

To...	Do this...
Power off (Shutdown)	Click ⊞ → ⏻ **Power** → **Shut down**.
Sleep	Use one of these methods: ● Press the power button.* ● Close the top cover.* ● Press **Fn** + **F12**.* ● Click ⊞ → ⏻ **Power** → **Sleep**.
Hibernate	By default, this option is not shown in the Start menu. If you want to use the feature, set up accordingly in Windows settings.

* “Sleep” is the default result of the action. You can change what the action does through Windows settings.

Taking a Look at the Computer

NOTE: Depending on the specific model you purchased, the color and look of your model may not exactly match the graphics shown in this document.

CAUTION: You need to open the protective covers to access the connectors. When not using a connector, make sure to close the cover completely for water- and dust-proof integrity. (Engage the locking mechanism if existing.)

Front Components

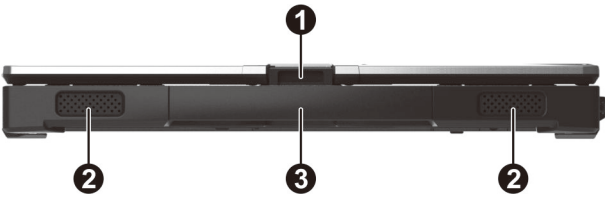

Ref	Component	Description
1	**Top cover latch**	Locks the top cover.
2	**Stereo speaker**	Sends out sound and voice from the computer.
3	**Handle**	Provides a convenient way to carry the computer. **NOTE:** When carrying the computer around, always use the handle or the carrying strap (purchased separately).

Rear Components

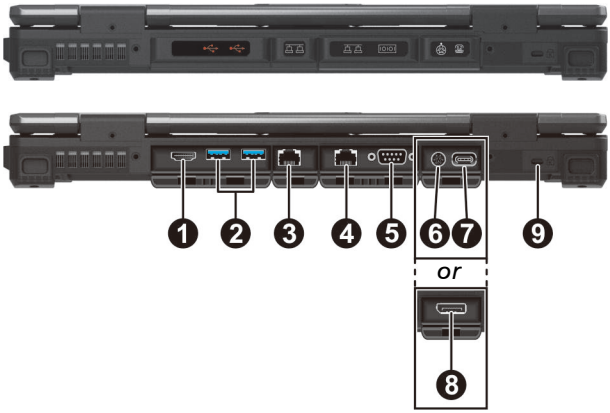

Ref	Component	Description
❶	**HDMI connector**	Connects a HDMI monitor or TV set.
❷	**USB 3.2 Gen 2 port**	Connects a USB device.
❸	**RJ45 connector**	Connects the LAN cable (for LAN1).
❹	**RJ45 connector**	Connects the LAN cable (for LAN2).
❺	**RS-232 serial connector**	Connects a serial mouse or serial communication device.
❻	**Rugged USB 3.0 connector**	Connects a USB device that supports Fischer MiniMax connection.
❼	**Rugged USB 3.2 Gen 1 Type-C connector**	Connects a USB device that supports USB Type-C connection.
❽	**DisplayPort connector**	Connects an external display monitor.
❾	**Kensington lock**	Locks the computer to a stationary object for security.

Right-Side Components

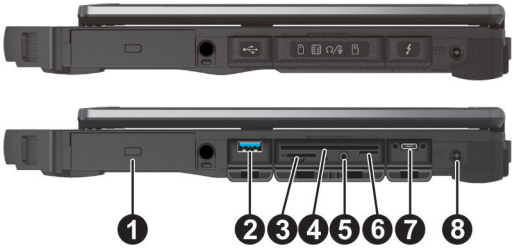

Ref	Component	Description
❶	**Battery pack**	Supplies power to your computer when external power is not connected.
❷	**USB 3.2 Gen 1 port**	Connects a USB device.
❸	**SIM card slot**	Accepts a SIM card for models having the WWAN module. **NOTE:** The slot still exists but cannot be used for models without the WWAN module.
❹	**Smart card reader**	Accepts a smart card for additional security feature.
❺	**Combo audio connector**	Connects a set of headphones or external speakers with amplifier.
		Supports a headset microphone with 4-pole TRRS 3.5mm jack.
❻	**Storage card reader**	Accepts a microSD card for removable storage media.
❼	**USB-C Thunderbolt™ 4 port**	Connects to devices that support Thunderbolt or USB-C connection.
❽	**Power connector**	Connects the AC adapter.

Left-Side Components

Ref	Component	Description
❶	**Battery pack**	Supplies power to your computer when external power is not connected.

Top-open Components

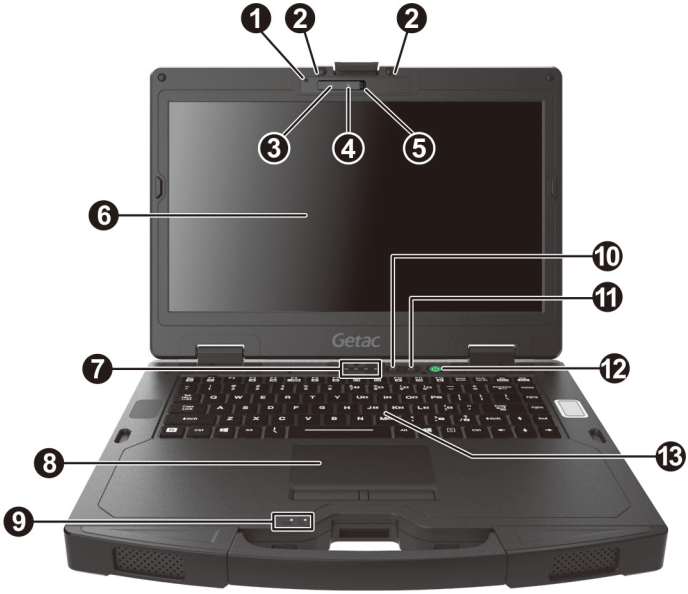

Ref	Component	Description
❶	**Light sensor**	Senses the ambient light for automatic adjustments of the display backlight.
❷	**Microphone**	Receives sound and voice for the computer.
❸	**Camera indicator**	Lights up when the camera is in use.

Ref	Component	Description
❹	**Camera lens**	Allows you to use the camera function.
❺	**Camera cover**	Covers the camera lens. Slide the camera cover toward the right to use the camera; slide it toward the left for privacy protection.
❻	**LCD screen**	Displays the output of the computer.
❼	**Indicators**	
	Caps Lock	Lights green when Caps Lock is on.
	Num Lock	Lights green when Num Lock is on.
	SSD	Blinks green when the computer is accessing the solid-state drive (SSD).
	RF (Radio Frequency)	Lights green when the RF radio of any RF feature (WLAN/Bluetooth/WWAN) is on.
❽	**Touchpad**	Serves as the pointing device of the computer.
❾	**Indicators**	
	Battery	Lights amber when the battery is being charged.
		Lights green when battery charging is completed.
		Blinks green to indicate the battery's built-in high temperature protection mechanism is activated. **CAUTION:** Do not remove the battery during this period.
		Blinks red when the battery's capacity is below 10 %.
		Blinks amber when the battery is in an abnormal condition.
	Power	Lights green when computer is on.
		Blinks green when computer is in Sleep mode.
❿	**P1 button**	Toggles Blackout mode on or off. In Blackout mode, the LCD backlight, keyboard backlight, and LED indicators are all turned off; and the sound is muted.

Ref	Component	Description
		Can be changed to a different function using G-Manager.
⓫	**P2 button**	Toggles the sunlight-readable mode on or off. In sunlight-readable mode, the LCD brightness is increased to the highest level.
		Can be changed to a different function using G-Manager.
⓬	**Power button**	Turns the power on or off. (The default “off” state is “Sleep mode.”)
⓭	**Keyboard**	Serves as the data input device of the computer.

Bottom Components

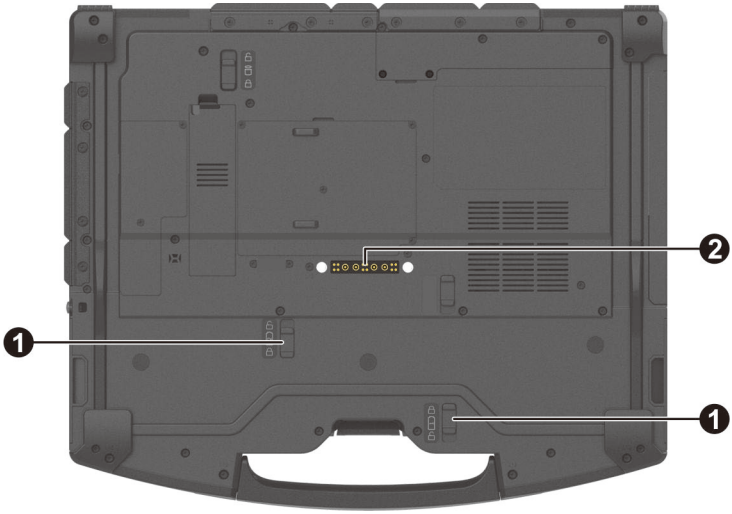

Ref	Component	Description
❶	**Battery latch**	Locks the second battery pack in place.
❷	**Docking connector**	Connects to the office or vehicle dock (purchased separately).

Chapter 2

Operating Your Computer

This chapter provides information about the use of the computer.

If you are new to computers, reading this chapter will help you learn the operating basics. If you are already a computer user, you may choose to read only the parts containing information unique to your computer.

CAUTION:

- Do not expose your skin to the computer when operating it in a very hot or cold environment.
- The computer can get uncomfortably warm when you use it in high temperatures. As a safety precaution in such a circumstance, do not place the computer on your lap or touch it with your bare hands for extended periods of time. Prolonged body contact can cause discomfort and potentially a burn.

Using the Keyboard

Your keyboard has all the standard functions of a full-sized computer keyboard plus an **Fn** key added for specific functions.

The standard functions of the keyboard can be further divided into four major categories:

- Typewriter keys
- Cursor-control keys
- Numeric keys
- Function keys

Typewriter Keys

Typewriter keys are similar to the keys on a typewriter. Several keys are added such as the **Ctrl**, **Alt**, **Esc**, and lock keys for special purposes.

The Control (**Ctrl**) / Alternate (**Alt**) key is normally used in combination with other keys for program-specific functions. The Escape (**Esc**) key is usually used for stopping a process. Examples are exiting a program and canceling a command. The function depends on the program you are using.

Cursor-Control Keys

Cursor-control keys are generally used for moving and editing purposes. They include:

- Up, down, left, and right arrow keys
- **Page Up**, **Page Down**, **Home**, and **End** keys (used with the **Fn** key)
- **Insert** and **Delete** keys

NOTE: The word "cursor" refers to the indicator on the screen that lets you know exactly where on your screen anything you type will appear. It can take the form of a vertical or horizontal line, a block, or one of many other shapes.

Numeric Keypad

A 15-key numeric keypad is embedded in the typewriter keys as shown next:

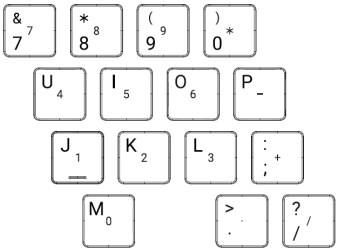

Numeric keys facilitate entering of numbers and calculations. When Num Lock is on, the numeric keys are activated; meaning you can use these keys to enter numerals.

NOTE:

- When the numeric keypad is activated and you need to type the English letter in the keypad area, you can turn Num Lock off or you can press **Fn** and then the letter without turning Num Lock off.
- Some software may not be able to use the numeric keypad on the computer. If so, use the numeric keypad on an external keyboard instead.
- The **Num Lock** key can be disabled. (See “Main Menu” in Chapter 5.)

Function Keys

On the top row of the keys are the function keys: **F1** to **F12**. Function keys are multi-purpose keys that perform functions defined by individual programs.

Fn Key

The **Fn** key, at the lower left corner of the keyboard, is used with another key to perform the alternative function of a key. To perform a desired function, first press and hold **Fn**, then press the other key.

Hot Keys

Hot keys refer to a combination of keys that can be pressed any time to activate special functions of the computer. Most hot keys operate in a cyclic way. Each time a hot key combination is pressed, it shifts the corresponding function to the other or next choice.

You can easily identify the hot keys with the icons imprinted on the keytop. The hot keys are described next.

Keys	Descriptions
Fn + Esc	Switches the keyboard backlight off or on (with 4-level brightness).
Fn + F1	Switches the RF (radio frequency) radio on and off. When off, all wireless modules (such as WLAN, Bluetooth, and WWAN) cannot be used. When on, individual settings of the module work.
Fn + F3	Decreases the sound volume.
Fn + F4	Increases the sound volume.
Fn + F5	Switches the display output to the next choice if an external display is connected. Choices are: → PC screen only ↓ Duplicate (See the same thing on all your displays.) ↓ Extend (See your desktop across multiple screens.) ↓ Second screen only The hot keys are equivalent to Windows logo key + **P**.
Fn + F6	Decreases the LCD brightness.
Fn + F7	Increases the LCD brightness.

Keys	Descriptions
Fn + F9	Switches the touchpad function off or on.
Fn + F10	Switches the system sound output off (mute) or on.
Fn + F11	Switches the display backlight off or on.
Fn + F12	Serves as the sleep button that you can define with Windows' **Power Options**.

Windows Keys

The keyboard has three keys that perform Windows-specific functions.

- The Windows Logo key opens the **Start** menu and performs software-specific functions when used in combination with other keys.
- The Application key usually has the same effect as a right mouse click. (On your keyboard, this function shares the same key with another function. To use this function, you have to first press and hold the **Fn** key and then press the key.)
- The Copilot key invokes Copilot in Windows, which provides centralized AI assistance to you. It requires Microsoft account to log in. When Copilot for Windows is not available or enabled on the computer, pressing the Copilot key will launch Windows Search.

NOTE: If Copilot has not been included as a default tool in your Windows 11 version yet, you can enable Copilot by updating your Windows to the latest version. Go to **Settings** → **Windows Update** to perform the update.

Using the Touchpad

CAUTION: Do not use a sharp object such as a pen on the touchpad. Doing so may damage the touchpad surface.

NOTE:

- You can press **Fn+F9** to toggle the touchpad function on or off.
- For optimal performance of the touchpad, keep your fingers and the pad clean and dry. When tapping on the pad, tap lightly. Do not use excessive force.

The touchpad is a pointing device that allows you to communicate with the computer by controlling the location of the pointer on the screen and making selection with the buttons.

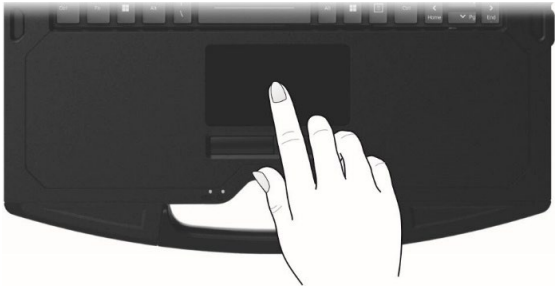

The touchpad consists of a rectangular pad (work surface) and a left and right buttons. To use the touchpad, place your forefinger or thumb on the pad. The rectangular pad acts like a miniature duplicate of your display. As you slide your fingertip across the pad, the pointer (also called cursor) on the screen moves accordingly. When your finger reaches the edge of the pad, simply relocate yourself by lifting the finger and placing it on the other side of the pad.

Here are some common terms that you should know when using the touchpad:

Term	Action
Point	Move your finger on the pad until the cursor points to the selection on the screen.

Term	Action
Click	Press and release the left button. –or– Tap gently anywhere on the pad.
Double-click	Press and release the left button twice in quick succession. –or– Tap twice on the pad rapidly.
Drag and drop	Press and hold the left button, then move your finger until you reach your destination (drag). Finally, release the button (drop) when you finish dragging your selection to the destination. The object will drop into the new location. –or– Gently tap twice on the pad and on the second tap, keep your finger in contact with the pad. Then, move your finger across the pad to drag the selected object to your destination. When you lift your finger from the pad, the selected object will drop into place.

TABLE NOTE: If you swap the left and right buttons, “tapping” on the touchpad as an alternative method of pressing the left button will no longer be valid.

Configuring the Touchpad

The touchpad supports touch gestures for Windows. You may want to configure the touchpad to suit your needs.

To configure the touchpad, go to **Settings → Bluetooth & devices → Touchpad**.

Using Network and Wireless Connections

Using the LAN

Your computer has two LAN modules so you can connect to two networks at the same time.

To connect the network cable to the LAN module, connect one end of the LAN cable to the RJ45 connector on the computer and the other end to the network hub.

NOTE: LAN2 module implements DSM (Deep Slumber Mode) to save battery power. Power is supplied to the LAN module only when the LAN cable is connected. This means the LAN module will not appear in Windows' **Device Manager** if the LAN cable is not connected and will appear if the cable is connected.

Using the WLAN

The WLAN (Wireless Local Area Network) module supports IEEE 802.11ax.

Turning On/Off WLAN

To turn on WLAN:

Select the network icon in the lower right of the taskbar. Then, select the **Wi-Fi** button.

To turn off WLAN:

You can turn off WLAN the same way you turn it on.

If you want to quickly turn off all wireless radio, simply switch on Airplane mode. You can control the Airplane mode using one of the below methods.

- Select the network icon in the lower right of the taskbar. Then, select the **Airplane mode** button.
- Press **Fn+F1**.

Connecting to a WLAN Network

1. Make sure that the WLAN function is enabled (as described above).
2. Click the network icon in the lower right of the task bar.
3. In the list of available wireless networks, click a network, and then click **Connect**.
4. Some networks require a network security key or passphrase. To connect to one of those networks, ask your network administrator or Internet service provider (ISP) for the security key or passphrase.

For more information on setting a wireless network connection, refer to Windows online help.

Using the Bluetooth Feature

The Bluetooth technology allows short-range wireless communications between devices without requiring a cable connection. Data can be transmitted through walls, pockets and briefcases as long as two devices are within range.

Turning On/Off Bluetooth

To turn on Bluetooth:

Go to **Settings → Bluetooth & devices**. Slide the **Bluetooth** switch to the **On** position.

To turn off Bluetooth:

You can turn off Bluetooth the same way you turn it on.

If you want to quickly turn off all wireless radio, simply switch on Airplane mode. You can control the Airplane mode using one of the below methods.

- Select the network icon in the lower right of the taskbar. Then, select the **Airplane mode** button.
- Press **Fn+F1**.

Connecting to another Bluetooth Device

1. Make sure that the Bluetooth function is enabled (as described above).
2. Make sure that the target Bluetooth device is turned on, discoverable and within close range. (See the documentation that came with the Bluetooth device.)
3. Go to **Settings → Bluetooth & devices → Add device → Bluetooth**.
4. Select the device you want to connect from the search results.
5. Depending on the type of Bluetooth device that you want to connect to, you will need to enter the pertinent information.

For detailed information on using the Bluetooth feature, see Windows' online Help.

Using the WWAN Feature (Optional)

A WWAN (Wireless Wide Area Network) uses mobile telecommunication cellular network technologies to transfer data. The WWAN module of your computer supports 4G LTE or 5G NR.

NOTE: Your model only supports data transmission; voice transmission is not supported.

Installing a SIM Card

1. Turn off the computer and disconnect the AC adapter.
2. Open the cover of the SIM card slot.
3. Remove one screw to detach the small metal plate that covers the SIM card slot.

4. Insert the SIM card into the slot. Make sure the golden contact area on the card is facing upward and the beveled corner on the SIM card facing inward.

5. Close the cover.

Turning On/Off WWAN

To turn on WWAN:

Select the network icon in the lower right of the taskbar. Then, select the **Cellular** button.

To turn off WWAN:

You can turn off WWAN the same way you turn it on.

If you want to quickly turn off all wireless radio, simply switch on Airplane mode. You can control the Airplane mode using one of the below methods.

- Select the network icon in the lower right of the taskbar. Then, select the **Airplane mode** button.
- Press **Fn+F1**.

Setting up a WWAN Connection

Go to **Settings** → **Network & Internet** → **Cellular**. (For detailed information on cellular settings in Windows 10, see Microsoft Support website.)

NOTE: When using the LTE GPS tracking function, make sure that the SIM card is inserted and the mobile network is enabled.

Chapter 3

Managing Power

Your computer operates either on external AC power or on internal battery power.

This chapter tells you how you can effectively manage power. To maintain optimal battery performance, it is important that you use the battery in the proper way.

AC Adapter

CAUTION:

- The AC adapter is designed for use with your computer only. Connecting the AC adapter to another device can damage the adapter.
- The AC power cord supplied with your computer is for use in the country where you purchased your computer. If you plan to go overseas with the computer, consult your dealer for the appropriate power cord.
- When you disconnect the AC adapter, disconnect from the electrical outlet first and then from the computer. A reverse procedure may damage the AC adapter or computer.
- When unplugging the connector, always hold the plug head. Never pull on the cord.

The AC adapter serves as a converter from AC (Alternating Current) to DC (Direct Current) power because your computer runs on DC power, but an electrical outlet usually provides AC power. It also charges the battery pack when connected to AC power.

The adapter operates on any voltage in the range of 100 V – 240 V AC.

Battery Pack

The battery pack is the internal power source for the computer. It is rechargeable using the AC adapter.

CAUTION: A battery pack can be removed only when it is not being charged/ discharged or if you are hot-swapping the battery pack (for models having more than one battery pack).

NOTE: Care and maintenance information for the battery is provided in the "Battery Pack Guidelines" section in Chapter 7.

Charging the Battery Pack

NOTE:

- Charging will not start if the internal temperature of the battery pack is below 0 °C (32 °F) or above 50 °C (122 °F); the charging process will stop if the internal temperature of the battery pack gets above 60 °C (140 °F). To avoid damaging the battery under this situation, disconnect the AC adapter and wait for the battery to return to room temperature before charging again.
- During charging, do not disconnect the AC adapter before the battery has been fully charged; otherwise, you will get a prematurely charged battery.
- The battery has a high temperature protection mechanism which limits the maximum charge of the battery to 80% of its total capacity in the event of high temperature conditions. In such conditions, the battery will be regarded as fully charged at 80% capacity.
- The battery level may automatically lessen due to the self-discharge process, even when the battery pack is fully charged. This happens no matter if the battery pack is installed in the computer.

To charge the battery pack, connect the AC adapter to the computer and an electrical outlet. The Battery Indicator ( ) on the computer glows amber to indicate that charging is in progress. You are advised to keep the computer power off while the battery is being charged. When the battery is fully charged, the Battery Indicator lights green.

It takes approximately 2.5 to 3 hours to fully charge one battery pack. The two battery packs are charged in parallel.

CAUTION: After the computer has been fully recharged, do not immediately disconnect and reconnect the AC adapter to charge it again. Doing so may damage the battery.

Initializing the Battery Pack

You need to initialize a new battery pack before using it for the first time or when the actual operating time of a battery pack is much less than expected. Initializing is the process of fully charging, discharging, and then charging. It can take several hours.

The G-Manager program provides a tool called "Battery Recalibration" for the purpose. (See "G-Manager" in Chapter 6.)

Checking the Battery Level

NOTE: Any battery level indication is an estimated result. The actual operating time can be different from the estimated time, depending on how you are using the computer.

The operating time of a fully charged battery pack depends on how you are using the computer. When your applications often access peripherals, you will experience a shorter operating time.

You can find the battery icon on the Windows taskbar (lower-right corner). The icon shows the approximate battery level.

The two battery packs are discharged in parallel as long as the voltage of them is currently the same. If the voltage of a battery pack is higher, this particular battery pack will be discharged first until its voltage equals that of the other.

Battery Low Signals and Actions

The battery icon changes appearance to display the current state of the battery.

Battery Icon	Battery Level	Description
	Discharging	The icon shows the charge remaining in 10-percent increments until the charge reaches the low-battery level.
	Low	The battery charge has reached the low-battery level.
	Critically low	The battery charge has reached the critical battery level. By default, Windows will display a notification and put your computer into Hibernation.

When the battery is low, the computer's Battery Indicator ( ) also blinks red to alert you to take actions.

Always respond to low-battery by connecting the AC adapter, placing your computer in Hibernation mode, or turning off the computer.

Replacing the Battery Pack

CAUTION:

- There is danger of explosion if the battery is incorrectly replaced. Replace the battery only with the computer manufacturer's optional battery packs. Discard used batteries according to the dealer's instructions.
- Do not attempt to disassemble the battery pack.
- A battery pack can get hot due to long working hours. Do not touch a hot battery pack with bare hands. After removing a battery pack, put it in a well-ventilated area.

NOTE: You can hot swap a battery pack if your computer model has another one supplying the power. The appropriate temperature range for hot swapping the battery pack is between -21°C (-5.8 °F) and 45 °C (113 °F).

1. Turn off the computer and disconnect the AC adapter. After turning off the computer, allow a cool-down time of at least 5 minutes before removing the battery pack.

For models having more than one battery pack: Skip this step if you are hot swapping the battery pack.

2. Carefully place the computer upside down.

3. Locate the battery pack you want to remove.

4. Slide the battery latch to the unlocked position (🔓) (❶) and hold it there. Meanwhile, grasp the edge of the battery pack using the other hand and pull it out of the bay (❷).

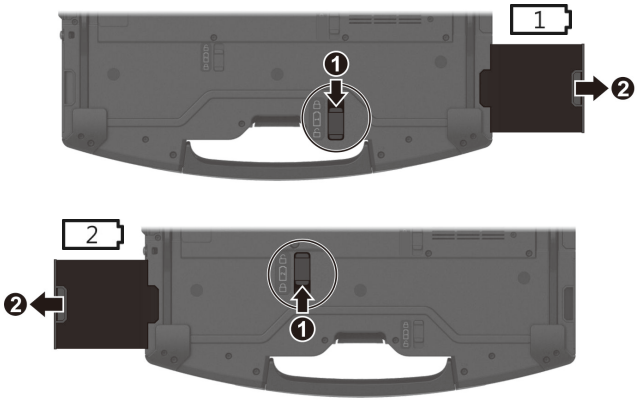

5. Noting the orientation, insert the new battery pack all the way into the bay. The battery latch should be engaged in the locked position (🔒).

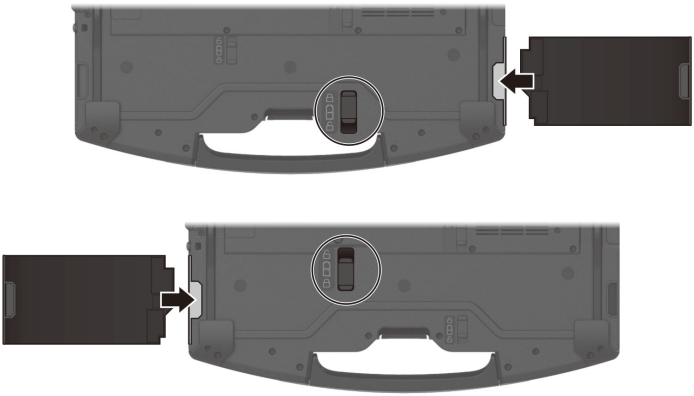

Power-Saving Tips

Aside from enabling your computer's power saving mode, you can do your part to maximize the battery's operating time by following these suggestions.

- Do not disable Power Management.
- Decrease the LCD brightness to the lowest comfortable level.
- Shorten the length of time before Windows turn off the display.
- When not using a connected device, disconnect it.
- Turn off the wireless radio if you are not using the wireless module (such as WLAN, Bluetooth, or WWAN).
- Turn off the computer when you are not using it.

Chapter 4

Expanding Your Computer

You can expand the capabilities of your computer by connecting other peripheral devices.

When using a device, be sure to read the instructions accompanying the device together with the relevant section in this chapter.

Connecting Peripheral Devices

Connecting a USB Device

Your computer has three USB Type-A ports for connecting USB devices, such as a digital camera, scanner, printer, and mouse.

USB 3.2 Gen 2 supports a transfer rate up to 10 Gbit/s.

USB 3.2 Gen 1 supports a transfer rate up to 5 Gbit/s.

Connecting a Thunderbolt™ Device

Your computer has a Thunderbolt 4 port. This port features:

- USB Type-C (or simply USB-C) connector format
- Up to 40 Gbps data transfer speed
- DisplayPort
- USB Power Delivery
  Note that you should use the appropriate wattage/voltage USB-C power adapter for your computer model.
  USB-C power adapter specifications: 90 W or above (20 V, 4.5 A or above)

Applications include storage, display, networking, single-cable docking, and more.

NOTE:

- USB Power Delivery is not supported for Discrete GPU models.
- Thunderbolt ports are backward-compatible with USB-C devices. An USB-C device plugged into a Thunderbolt port will function normally.

Connecting USB Devices to the Rugged Connectors (Select Models Only)

Select models have two rugged connectors for connecting USB devices. One is a Fischer USB connector and the other one is a rugged USB Type-C connector.

You need the converter cable (an option from Getac) for the connection.

Fischer USB Connector

Select models have a USB 3.0 connector of DBPU 9 pin type, which is a Fischer MiniMax push-pull locking system.

1. Align the dot on the cable with the dot on the computer.
2. Push the outer sleeve and then plug the connector.

Once connected, a special locking mechanism will prevent accidental disconnection. To disconnect, push the outer sleeve to unlock and then pull the connector out.

Rugged USB Type-C Connector

Select models have a rugged USB 3.2 Gen 1 connector.

Align and push the outer sleeve to plug the connector.

Once connected, a special locking mechanism will prevent accidental disconnection. To disconnect, push the outer sleeve to unlock and then pull the connector out.

Connecting a Monitor

Your computer supports HDMI and DisplayPort interfaces. Depending on the type of your monitor, plug the monitor's signal connector to the HDMI or DisplayPort connector.

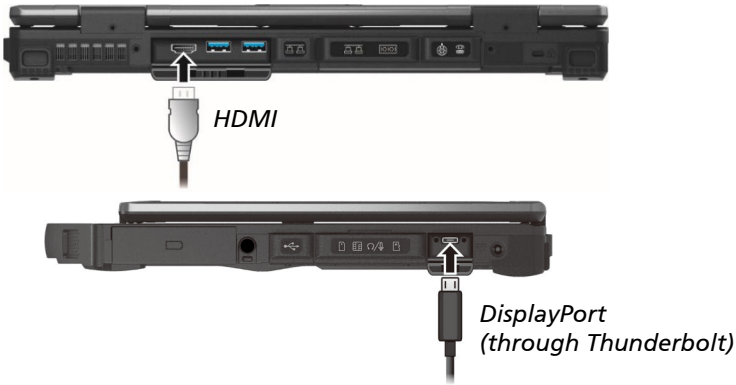

Select models have ~~a~~ DisplayPort connector.

The connected device should respond by default. If not, you can switch the display output by pressing the **Fn+F5** hot keys. (You can also change the display through Windows **Control Panel**.)

Connecting a Serial Device

Your computer has a RS-232 serial port for connecting a serial device.

Connecting an Audio Device

The audio combo connector is the “4-pole TRRS 3.5 mm” type so you can connect a compatible headset microphone.

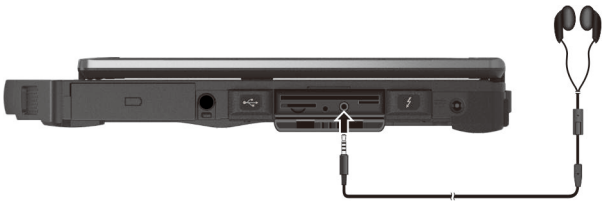

SAFETY WARNING:

To prevent possible hearing damage, do not listen at high volume levels for long periods.

Using Storage and Expansion Cards

Using Storage Cards

Your computer has a storage card reader. The card reader is a small drive for reading from and writing to removable storage cards (or called memory cards). The reader supports supports microSD (Secure Digital) and microSDXC (Secure Digital eXtended Capacity) cards.

To insert a storage card:

1. Locate the microSD card reader on the right side of the computer and open the cover.
2. Align the card with its connector pointing to the slot and its label facing up. Slide the card into the slot until it reaches the end.

3. Close the cover.
4. Windows will detect the card and assign it a drive name.

To remove a storage card:

1. Open **File Explorer** and click **Computer**.
2. Right-click the drive with the card and select **Eject**.
3. Slightly push the card to release and then pull it out of the slot.
4. Close the cover.

Using Smart Cards

With an embedded microcontroller, smart cards have the unique ability to store large amounts of data, carry out their own on-card functions (e.g., encryption and mutual authentication), and interact intelligently with a smart card reader.

To insert a smart card:

1. Locate the smart card slot on the right of the computer and open the cover.
2. Slide the smart card, with its label and embedded computer chip facing up into the slot.

3. Close the cover.

To remove a smart card:

1. Make sure that the third-party smart card software is not accessing the smart card.
2. Pull the card out of the slot.
3. Close the cover.

Chapter 5

Using BIOS Setup

BIOS Setup Utility is a program for configuring the BIOS (Basic Input/ Output System) settings of the computer. BIOS is a layer of software, called firmware, that translates instructions from other layers of software into instructions that the computer hardware can understand. The BIOS settings are needed by your computer to identify the types of installed devices and establish special features.

This chapter tells you how to use the BIOS Setup Utility.

When and How to Use

You need to run BIOS Setup Utility when:

- You see an error message on the screen requesting you to run BIOS Setup Utility.
- You want to restore the factory default BIOS settings.
- You want to modify some specific settings according to the hardware.
- You want to modify some specific settings to optimize the system performance.

To run BIOS Setup Utility, go to → **Settings** → **System** → **Recovery**. Under **Advanced startup**, click **Restart now**. In the boot options menu, click **Troubleshoot** → **Advanced options** → **UEFI Firmware Settings**. Click **Restart**. In the next menu that appears, use the arrow key to select **Setup Utility** and press **Enter**.

The BIOS Setup Utility main screen appears. In general, you can use the arrow keys to move around and **F5/F6** keys to change the setup values. Keyboard information can be found at the bottom of the screen.

NOTE:

- The actual setting items on your model may differ from those described in this chapter.
- The availability of some setting items depends on the configuration of your computer.

Menu Descriptions

Information Menu

The Information menu contains the basic configuration information of the system. There are no user-definable items in this menu.

Main Menu

The Main menu contains the various system settings.

- **System Date** sets the system date.
- **System Time** sets the system time.
- **Internal Numlock** sets if the Num Lock function of the built-in keyboard can work. When set to *Enabled*, you can press **Fn + Num LK** to activate the numeric keypad, which is embedded in the typewriter keys. When set to *Disabled*, Num Lock does not work. In this case, you can still press **Fn +** a letter key to enter a number.
- **Fn and Ctrl Key Placement** sets the positions of the **Ctrl** and **Fn** keys on the keyboard. If the placement of the **Ctrl** and **Fn** keys on the keyboard is not what you are accustomed to, you can swap the keys.

Advanced Menu

The Advanced menu contains the advanced settings.

- **Power Button Delay** sets power button delay time (1 second or 2 seconds) so that accidental touching of the power button does not cause undesired operation. You can also disable the delay.
- **System Policy** allows you to choose between *Performance* and *Balance*. If battery life is your first priority, select *Balance*. If you need system performance more than battery life, select *Performance*.
- **AC Initiation** sets if connecting AC power will automatically start or resume the system.
- **Magnetic Sensor** enables or disables the magnetic sensor. You can disable the magnetic sensor to avoid the magnetic interference in a

strong magnetic environment. When this item is disabled, the computer will not enter the power saving state(s) associated with the magnetic sensor.

- **MAC Address Pass Through** allows the system specific MAC address to pass through a connected dock, meaning the dock specific MAC address will be overridden by the system specific MAC address.

- **Active Management Technology Support** (This item appears only on models supporting vPro.)
  Intel AMT Support enables or disables Intel® Active Management Technology BIOS extension execution. AMT allows the system administrator to access an AMT featured computer remotely.
  Intel AMT Setup Prompt determines whether the prompt for entering Intel AMT Setup appears or not during POST. (This item only appears when the previous item is set to *Enabled*.)
  USB Provisioning of AMT enables or disables the use of a USB key for provisioning Intel AMT.

- **Virtualization Technology Setup** sets Virtualization Technology parameters.
  Intel(R) Virtualization Technology enables or disables Intel® VT (Intel Virtualization Technology) feature which provides hardware support for processor virtualization. When enabled, a VMM (Virtual Machine Monitor) can utilize the additional hardware virtualization capabilities provided by this technology.
  Intel(R) VT for Directed I/O (VT-d) enables or disables VT-d (Intel® Virtualization Technology for Directed I/O). When enabled, VT-d helps enhance Intel platforms for efficient virtualization of I/O devices.

- **Device Configuration** enables or disables several hardware components. The items available for setting depend on your model.

- **Diagnostics and System Tester**
  H2ODST Tool performs system baseline check.

- **Recovery Partition** allows you to restore your Windows 10 system to the factory default state by using the "recovery partition" feature. Recovery partition is a portion of your SSD that is set aside by the manufacturer to hold the original image of your system.

WARNING:

- Using this feature will reinstall Windows to your system and configure it to the system's factory default settings. All data on the SSD will be lost.

- Make sure that power is not interrupted during the recovery process. An unsuccessful recovery may result in Windows startup problems.

- **Windows RE** launches Windows Recovery Environment. Windows RE (Windows Recovery Environment) is a recovery environment that provides recovery, repair, and troubleshooting tools in Windows 10.

Security Menu

The Security menu contains the security settings, which safeguard your system against unauthorized use.

NOTE:

- You can set the user password only when the supervisor password has been set.
- If both the administrator and user passwords are set, you can enter any of them for starting up the system and/or entering BIOS Setup. However, the user password only allows you to view/change the settings of certain items.
- A password setting is applied right after it is confirmed. To cancel a password, leave the password empty by pressing the **Enter** key.

- **Set Supervisor/User Password** sets the supervisor/user password. You can set the supervisor/user password to be required for starting up the system and/or entering BIOS Setup.

- **Strong Password** enables or disables strong password. When enabled, the password you set must contain at least one upper-case letter, one lower-case letter, and one digit.

- **Password Configuration** sets the minimum password length. Enter the number in the input field and select **[Yes]**. The number should be between 4 and 64.

- **Password on Boot** allows you to enable or disable the entering of password for booting up your system.

- **Secure Boot Configuration** You can access this item only after setting the **Supervisor Password**.
  Secure Boot enables or disables Secure Boot. Secure Boot is a feature that helps prevent unauthorized firmware, operating systems, or UEFI drivers from running at boot time.
  Delete all Security Boot Keys deletes all secure boot variables.

Restore Factory Defaults resets secure boot variables to manufacturing defaults.
Load MS UEFI CA Key determines if the Microsoft UEFI CA key will be used to sign non-Microsoft UEFI boot loaders, such as Linux or other operating systems.

- **Set SSD 0 User Password** sets the password for locking the SSD. After setting a password, the SSD can only be unlocked by the password no matter where it is installed.
- **TPM Setup Menu**
  Change TPM State allows you to select between *No Operation* and *Clear*.
- **Intel Trusted Execution Technology** enables utilization of additional hardware capabilities provided by Intel® Trusted Execution Technology.

Boot Menu

The Boot menu sets the sequence of the devices to be searched for the operating system.

Press the arrow key to select a device on the boot order list and then press **+/–** key to change the order of the selected device.

The **[X]** sign after a device name means the device is included in the search. To exclude a device from the search, move to the **[X]** sign of the device and press **Enter**.

- **Fast Boot** enables or disables the "Fast Boot" mode in which the system skips the USB Device Enumeration when resuming from hibernation or hybrid shutdown.
- **Alternative WBM option** enables or disables WBM (Windows Boot Manager). If your computer has multiple operating systems, enable this item so that you can choose a specific one from a list of operating systems whenever the computer boots up.

Exit Menu

The Exit menu displays ways of exiting BIOS Setup Utility. After finishing with your settings, you must save and exit so that the changes can take effect.

- **Exit Saving Changes** saves the changes you have made and exits BIOS Setup Utility.
- **Exit Discarding Changes** exits BIOS Setup Utility without saving the changes you have made.
- **Load Setup Defaults** loads the factory default values for all the items.
- **Discard Changes** restores the previous values for all the items.
- **Saves Changes** saves the changes you have made.

Chapter 6

Using Getac Software

Getac software includes application programs for specific computer components and utility programs for overall management.

This chapter briefly introduces the programs.

G-Manager

G-Manager allows you to view, manage, and configure several system functions and feature. At the left side of the G-Manager screen are the menu items. Select an item to open its menu.

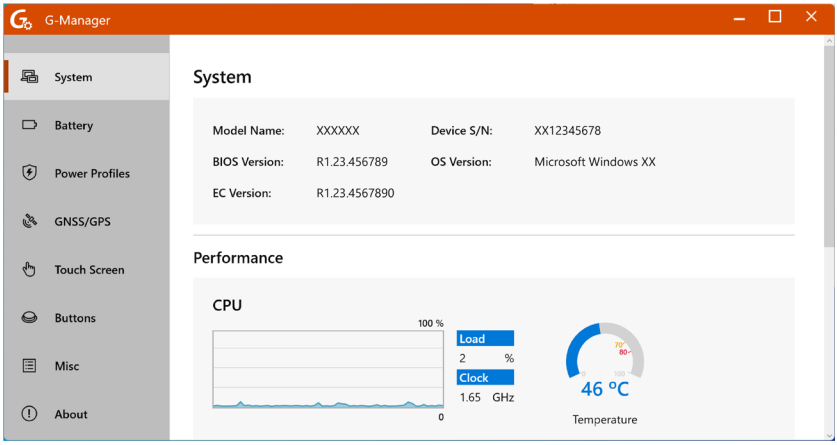

For detailed information, see the program's online help. Select **About → Help**.

NOTE: Not all items are supported by all models. Depending on your model, the actual items and information appearing on the screen can differ from those shown in this manual.

Chapter 7

Care and Maintenance

Taking good care of your computer will ensure a trouble-free operation and reduce the risk of damage to your computer.

This chapter gives you guidelines covering areas such as protecting, storing, cleaning, and traveling.

Protecting the Computer

To safeguard the integrity of your computer data as well as the computer itself, you can protect the computer in several ways as described in this section.

Using an Anti-Virus Strategy

You can install a virus-detecting program to monitor potential viruses that could damage your files.

Using the Cable Lock

You can use a Kensington-type cable lock to protect your computer against theft. The cable lock is available in most computer stores.

To use the lock, loop the lock cable around a stationary object such as a table. Insert the lock to the Kensington lock hole and turn the key to secure the lock. Store the key in a safe place.

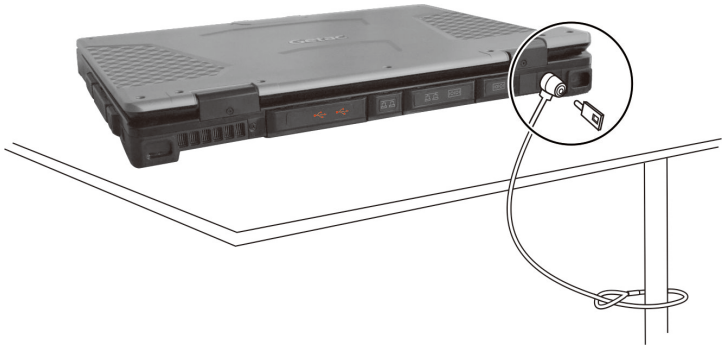

Taking Care of the Computer

Location Guidelines

- Operating temperature: -29 °C ~ 63 °C (-20 °F ~ 145 °F)
- Avoid placing the computer in a location subject to high humidity, extreme temperatures, mechanical vibration, direct sunlight, or heavy dust. Using the computer in extreme environments for long periods can result in product deterioration and a shortened product life.
- Operating in an environment with metallic dust is not allowed.
- Place the computer on a flat and steady surface. Do not stand the computer on its side or store it in an upside-down position. A strong impact by dropping or hitting may damage the computer.
- Do not cover or block any ventilation openings on the computer. For example, do not place the computer on a bed, sofa, rug, or other similar surface. Otherwise, overheating may occur that results in damage to the computer.
- As the computer can become very hot during operation, keep it away from objects that are vulnerable to heat.
- Keep the computer at least 13 cm (5 inches) away from electrical appliances that can generate a strong magnetic field such as a TV, refrigerator, motor, or a large audio speaker.
- Avoid moving the computer abruptly from a cold to a warm place. A temperature difference of more than 10 °C (18 °F) may cause condensation inside the unit, which may damage the storage media.

General Guidelines

- Do not place heavy objects on top of the computer when it is closed as this may damage the display.
- Do not move the computer simply by grasping the display screen.
- To avoid damaging the screen, do not touch it with any sharp object.

- LCD image sticking occurs when a fixed pattern is displayed on the screen for a prolonged period of time. You can avoid the problem by limiting the amount of static content on the display. It is recommended that you use a screen saver or turn off the display when it is not in use.
- To maximize the life of the backlight in the display, allow the backlight to automatically turn off as a result of power management.

Cleaning Guidelines

- Never clean the computer with its power on.
- Use a soft cloth moistened with water or a non-alkaline detergent to wipe the exterior of the computer.
- Gently wipe the display with a soft, lint-free cloth.
- Dust or grease on the touchpad can affect its sensitivity. Clean the pad by using adhesive tape to remove the dust and grease on its surface.
- If water or liquid is split onto the computer, wipe it dry and clean when possible. Though your computer is water-proof, do not leave the computer wet when you can dry it.
- If the computer gets wet where the temperature is 0°C (32°F) or below, freeze damage may occur. Make sure to dry the wet computer.

Battery Pack Guidelines

- Recharge the battery pack when it is nearly discharged. When recharging, make sure that the battery pack is fully charged. Doing so may avoid harm to the battery pack.
- The battery pack is a consumable product and the following conditions will shorten its life:
  – when frequently charging the battery pack
  – when using, charging, or storing in high temperature condition
- To avoid hastening the deterioration of the battery pack thereby prolonging its useful life, minimize the number of times you charge it so as not to frequently increase its internal temperature.

- Charge the battery pack between 10 °C ~ 30 °C (50 °F ~ 86 °F) temperature range. A higher environment temperature will cause the battery pack's temperature to rise. Avoid charging the battery pack inside a closed vehicle and in hot weather condition. Also, charging will not start if the battery pack is not within the allowed temperature range.

- It is recommended that you do not charge the battery pack more than once a day.

- It is recommended that you charge the battery pack with the computer's power off.

- To maintain the battery pack's operating efficiency, store it in a cool dark place removed from the computer and with 30 % ~ 40 % charge remaining.

- Important guidelines when using the battery pack.
  When installing or removing the battery pack take note of the following:
  – avoid installing or removing the battery pack when the computer is in Sleep mode. Abruptly removing the battery pack may cause loss of data or the computer may become unstable.
  – avoid touching the battery pack terminals or damage may occur, thereby causing improper operation to it or the computer.
  The computer's input voltage and surrounding temperature will directly affect the battery pack's charge and discharge time:
  – charging time will be prolonged when the computer is turned on. To shorten the charging time, it is recommended that you place the computer in sleep or hibernation mode.
  – a low temperature will prolong the charging time as well as hasten the discharge time.

- When using battery power in an extremely low temperature environment, you may experience shortened operating time and incorrect battery level reading. This phenomenon comes from the chemical characteristics of batteries. The appropriate operating temperature for the battery is -10 °C ~ 50 °C (14 °F ~ 122 °F).

- Do not leave the battery pack in storage for more than six months without recharging it.

When Traveling

- Make sure that the battery pack is fully charged.
- Make sure that the computer is turned off and the top cover is securely closed.
- Make sure that all the connector covers are closed completely to ensure the waterproof integrity.
- Do not leave objects in between the keyboard and closed display.
- Disconnect the AC adapter from the computer and take it with you. Use the AC adapter as the power source and as a battery-charger.
- Hand-carry the computer. Do not check it in as luggage.
- If you need to leave the computer in the car, put it in the trunk of the car to avoid exposing the computer to excessive heat.
- When going through airport security, it is recommended that you send the computer and flash disks through the X-ray machine (the device you set your bags on). Avoid the magnetic detector (the device you walk through) or the magnetic wand (the handheld device used by security personnel).
- If you plan to travel abroad with your computer, consult your dealer for the appropriate AC power cord for use in your country of destination.

Chapter 8

Troubleshooting

Computer problems can be caused by hardware, software, or both. When you encounter any problem, it might be a typical problem that can easily be solved.

This chapter tells you what actions to take when solving common computer problems.

Preliminary Checklist

Here are helpful hints to follow before you take further actions when you encounter any problem:

- Try to isolate which part of the computer is causing the problem.
- Make sure that you turn on all peripheral devices before turning on the computer.
- If an external device has a problem, make sure that the cable connections are correct and secure.
- Make sure that the configuration information is properly set in the BIOS Setup program.
- Make sure that all the device drivers are correctly installed.
- Make notes of your observations. Are there any messages on the screen? Do any indicators light? Do you hear any beeps? Detailed descriptions are useful to the service personnel when you need to consult one for assistance.

If any problem persists after you follow the instructions in this chapter, contact an authorized dealer for help.

Solving Common Problems

Battery Problems

The battery does not charge (Battery Charge indicator does not light amber).

- Make sure that the AC adapter is properly connected.
- Make sure that the battery is not too hot or cold. Allow time for the battery pack to return to room temperature.
- If the battery doesn't charge after it has been stored in very low temperatures, try disconnecting and reconnecting the AC adapter to solve the problem.
- Make sure that the battery pack is installed correctly.
- Make sure that the battery terminals are clean.

The operating time of a fully charged battery becomes shorter.

- If you often partially recharge and discharge, the battery might not be charged to its full potential. Initialize the battery to solve the problem.

The battery operating time indicated by the battery meter does not match the actual operating time.

- The actual operating time can be different from the estimated time, depending on how you are using the computer. If the actual operating time is much less than the estimated time, initialize the battery.

Bluetooth Problems

I cannot connect to another Bluetooth-enabled device.

- Make sure that both devices have activated Bluetooth feature.
- Make sure that the distance between the two devices is within the limit and that there are no walls or other obstructions between the devices.
- Make sure that the other device is not in “Hidden” mode.
- Make sure that both devices are compatible.

Display Problems

Nothing appears on the screen.

- During operation, the screen may automatically turn off as a result of power management. Press any key to see if the screen comes back.
- The brightness level might be too low. Increase brightness.
- The display output might be set to an external device. To switch the display back to the LCD, press the **Fn+F5** hot key or change the display through the **Display Settings** Properties.

The characters on the screen are dim.

- Adjust the brightness and/or contrast.

The display brightness cannot be increased.

- As a protection, the display brightness will be fixed at a low level when the surrounding temperature is too high or too low. It is not a malfunction in this situation.

Bad dots appear on the display at all times.

- A small number of missing, discolored, or bright dots on the screen are an intrinsic characteristic of TFT LCD technology. It is not regarded as an LCD defect.

Hardware Device Problems

The computer does not recognize a newly installed device.

- The device may not be correctly configured in the BIOS Setup program. Run the BIOS Setup program to identify the new type.
- Make sure if any device driver needs to be installed. (Refer to the documentation that came with the device.)
- Check the cables or power cords for correct connections.
- For an external device that has its own power switch, make sure that the power is turned on.

Keyboard and Touchpad Problems

The keyboard does not respond.

- Try connecting an external keyboard. If it works, contact an authorized dealer, as the internal keyboard cable might be loose.

Water or liquid is spilt into the keyboard.

- Immediately turn off the computer and unplug the AC adapter. Then turn the keyboard upside down to drain the liquid out of the keyboard. Make sure to clean up any part of the spill you can get to. Though the keyboard of your computer is spill-proof, liquid will remain in the keyboard enclosure if you don't remove it. Wait for the keyboard to air dry before using the computer again.

The touchpad does not work, or the pointer is difficult to control with the touchpad.

- Make sure that the touchpad is clean.

LAN Problems

I cannot access the network.

- Make sure that the LAN cable is properly connected to the RJ45 connector and the network hub.
- Make sure that the network configuration is appropriate.
- Make sure that the user name or password is correct.

Power Management Problems

The computer does not enter Sleep or Hibernation mode automatically.

- If you have a connection to another computer, the computer does not enter Sleep or Hibernation mode if the connection is actively in use.
- Make sure that the Sleep or Hibernation time-out is enabled.

The computer does not enter Sleep or Hibernation mode immediately.

- If the computer is performing an operation, it normally waits for the operation to finish.

The computer does not resume from Sleep or Hibernation mode.

- The computer automatically enters Sleep or Hibernation mode when the battery pack is empty. Do any one of the following:
  - Connect the AC adapter to the computer.
  - Replace the empty battery pack with a fully charged one.

Wake-on-LAN (WoL) doesn't seem to work.

- If your computer is connected to an older generation of office or vehicle dock, waking up from Microsoft Modern Standby mode is not supported.

Software Problems

An application program does not work correctly.

- Make sure that the software is correctly installed.
- If an error message appears on the screen, consult the software program's documentation for further information.
- If you are sure the operation has stop, reset the computer.

Sound Problems

No sound is produced.

- Make sure that the volume control is not set too low.
- Make sure that the computer is not in Sleep mode.
- If using an external speaker, make sure that the speaker is properly connected.

Distorted sound is produced.

- Make sure that the volume control is not set too high or too low. In most cases, a high setting can cause the audio electronics to distort the sound.

The sound system does not record.

- Adjust the playback or recording sound levels.

Startup Problems

When you turn on the computer, it does not seem to respond.

- If you are using an external AC power, make sure that the AC adapter is correctly and securely connected. If so, make sure that the electrical outlet works properly.
- If you are using the battery power, make sure that the battery is not discharged.

WLAN Problems

I cannot use the WLAN feature.

- Make sure that the WLAN feature is turned on.

Transmission quality is poor.

- Your computer may be in an out-of-range situation. Move your computer closer to the Access Point or another WLAN device it is associated with.
- Check if there is high interference around the environment and solve the problem as described next.

Radio interference exists.

- Move your computer away from the device causing the radio interference such as microwave oven and large metal objects.
- Plug your computer into an outlet on a different branch circuit from that used by the affecting device.
- Consult your dealer or an experienced radio technician for help.

I cannot connect to another WLAN device.

- Make sure that the WLAN feature is turned on.
- Make sure that the SSID setting is the same for every WLAN device in the network.

- Your computer is not recognizing changes. Restart the computer.
- Make sure that the IP address or subnet mask setting is correct.

I cannot communicate with the computer in the network when Infrastructure mode is configured.

- Make sure that the Access Point your computer is associated with is powered on and all the LEDs are working properly.
- If the operating radio channel is in poor quality, change the Access Point and all the wireless station(s) within the BSSID to another radio channel.
- Your computer may be in an out-of-range situation. Move your computer closer to the Access Point it is associated with.
- Make sure that your computer is configured with the same security option (encryption) to the Access Point.
- Use the Web Manager/Telnet of the Access Point to check whether it is connected to the network.
- Reconfigure and reset the Access Point.

I cannot access the network.

- Make sure that the network configuration is appropriate.
- Make sure that the user name or password is correct.
- You have moved out of range of the network.
- Turn off power management.

Other Problems

The date/time is incorrect.

- Correct the date and time via the operating system or BIOS Setup program.
- After you have performed everything as described above and still have the incorrect date and time every time you turn on the computer, the RTC (Real-Time Clock) battery is at the end of its life. Call an authorized dealer to replace the RTC battery.

Resetting the Computer

You may have to reset (reboot) your computer on some occasions when an error occurs and the program you are using hangs up.

If you are sure the operation has stopped and you cannot use the “restart” function of the operating system, reset the computer

Reset the computer by any of these methods:

- Press **Ctrl+Alt+Del** on the keyboard. This opens the **Ctrl-Alt-Del** screen where you can select actions including **Restart**.
- If the above action does not work, press and hold the power button for more than 5 seconds to force the system to turn off. Then turn on the power again.

System Recovery

Using Windows RE

Windows 10 has a recovery environment (Windows RE) that provides recovery, repair, and troubleshooting tools. The tools are referred to as Advanced Startup Options. You can access these options by selecting **Start → Settings → System → Recovery**.

There are several choices:

- **System Restore**
  This option allows you to restore Windows to an earlier point in time if you have created a restore point.
- **Recover from a drive**
  If you have created a recovery drive on Windows 10, you can use the recovery drive to reinstall Windows.
- **Reset this PC**
  This option allows you to reinstall Windows with or without keeping your files.

See Microsoft website for more information.

NOTE:

- If you are in a situation where your computer won't boot into Windows, you can access the Advanced Startup Options by running the BIOS Setup Utility and selecting **Advanced → Windows RE**.
- System recovery for Windows typically will take several hours to complete.

Using Recovery Partition

When necessary, you can restore your Windows 10 system to the factory default state by using the "recovery partition" feature. Recovery partition is a portion of your SSD that is set aside by the manufacturer to hold the original image of your system.

WARNING:

- Using this feature will reinstall Windows to your system and configure it to the system's factory default settings. All data on the SSD will be lost.
- Make sure that power is not interrupted during the recovery process. An unsuccessful recovery may result in Windows startup problems.

To restore your system to the factory default state:

1. Connect the AC adapter.
2. Run BIOS Setup Utility. Select **Advanced** → **Recovery Partition**. (See Chapter 5 for more information.)
3. Follow the onscreen instructions to complete the process.

Appendix A

Specifications

NOTE: Specifications are subject to change without any prior notice.

Parts		Specifications
CPU		- Intel® Core™ i7-1370P Processor, 24M Cache, up to 5.20 GHz - Intel® Core™ i5-1350P Processor, 12M Cache, up to 4.70 GHz
BIOS		Insyde, 32MB flash EEPROM, UEFI, supporting ACPI, TPM, Computrace, AMT, WMI, and BIOS diagnostic
RAM		32 GB DDR5 SO-DIMM
Video	Display panel	14-inch (16:9) wide TFT LCD, 1920x1080 FHD, dimmer mode, blackout mode
	Controller	UMA Intel® Iris® Xe Graphics
		Option: Nvidia GTX1650 MXM card (Discrete GPU models)
Audio	Features	High Definition audio
	Microphone	Integrated x 2, Mic Array
	Speaker	Speaker x 2
Keyboard		Standard keys with embedded numeric pad keys, 12 function keys, special **Fn** (Function) key and Windows keys, with backlight
Pointing device		Glide touchpad with multi-touch feature, capacitive type
Mass storage device		PCIe NVMe SSD (solid-state drive), M.2 type, 1TB, user-removable
Card slots		MicroSDXC Smart Card
I/O ports	Standard	USB 3.2 Gen 2 x 2, USB-C Thunderbolt 4, USB 3.2 Gen 1, RJ45, HDMI 2.0, combo audio (4-pole TRRS 3.5mm type), docking
	Configurable I/O options	One of the below configurations: - 2nd RJ45 (LAN2) + RS-232 + Rugged (Fischer MiniMax) USB 3.0 + Rugged USB 3.2 Gen 1 Type-C - 2nd RJ45 (LAN2) + RS-232 + DisplayPort
LAN		Intel® Gigabit LAN LAN1 and LAN2
Wireless LAN + Bluetooth		Intel AX201 2x2 802.11 AX + Bluetooth 5.1 combo Wireless LAN 2: ANJIE MCR822CE-M

Parts		Specifications
WWAN (option)		4G LTE or 5G NR, dual SIM (eSIM and external accessible SIM card)
Camera		5MP FHD Webcam
Security		Kensington lock TPM 2.0
Power	AC adapter	Universal AC adapter, 120 W, 100-240 V AC input, 19 V output
	Battery pack x 2	Lithium-ion 18650 type, 6-cell, 6900 mAh, 10.8 V
Dimension (W×D×H)		350.5 x 294.5 x 38.5 mm (13.8 x 11.59 x 1.52 inches)
Weight		≥ 2.38 kg (5.25 lb)
Environ-mental	Temperature*	Operating: -29 °C to 63 °C (-20 °F to 145 °F) Storage: -51 °C to 71 °C (-60 °F to 160 °F)
	Humidity	95% relative humidity, non-condensing
	Drop**	0.9 m (3 ft) drop resistant

Table Notes:

* When using the computer with AC power, a low temperature down to -29 °C (-20 °F) and the temperature range for MIL-STD-810 are supported. When using the computer with only battery power in a temperature down to -21 °C (-6 °F) (main battery pack) or -29 °C (-20 °F) (main battery pack + 2nd battery pack), it is advised that the system be booted in a warm environment, if possible, before being taken into an extreme cold environment for work.

** Drop test results vary with different computer configurations and also vary if optional accessories are attached.

Appendix B

Regulatory Information

This appendix provides regulatory statements and safety notices on your computer.

NOTE: Marking labels located on the exterior of your computer indicate the regulations that your model complies with. Please check the marking labels and refer to the corresponding statements in this appendix. Some notices apply to specific models only.

Safety Notices

About the Battery

If the battery is mishandled, it may cause fire, smoke or an explosion and the battery's functionality will be seriously damaged. The safety instructions listed below must be followed.

Danger

- Do not immerse the battery with liquid such as water, sea water or soda.
- Do not charge/discharge or place the battery in high-temperature (more than 80 °C / 176 °F) locations, such as near a fire, heater, in a car in direct sunlight, etc.
- Do not use unauthorized chargers.
- Do not force a reverse-charge or a reverse-connection.
- Do not connect the battery with AC plug (outlet) or car plugs.
- Do not adapt the battery to unspecified applications.
- Do not short circuit the battery.
- Do not drop or subject the battery to impacts.
- Do not penetrate with a nail or strike with a hammer.
- Do not directly solder the battery.
- Do not disassemble the battery.
- Keep the battery away from an extremely low air pressure environment as it may result in an explosion or the leakage of flammable liquid or gas.

Warning

- Keep the battery away from infants.
- Stop using the battery if there are noticeable abnormalities such as abnormal smell, heat, deformities, or discoloration.
- Stop charging if the charging process cannot be finished.

- In case of a leaking battery, keep the battery away from flames and do not touch it.
- Pack the battery tightly during transport.

Caution

- Do not use the battery where static electricity (more than 100V) exists that might damage the protection circuit of the battery.
- When children are using the system, parents or adults must ensure that they are using the system and battery correctly.
- Keep the battery away from flammable materials during charging and discharging.
- In case lead wires or metal objects come out from the battery, you must seal and insulate them completely.

Caution Texts Concerning Lithium Batteries

DANISH
ADVARSEL! Lithiumbatteri – Eksplosionsfare ved fejlagtig håndtering. Udskiftning må kun ske med batteri af samme fabrikat og type. Levér det brugte batteri tilbage til leverandøren.

NORWEGIAN
ADVARSEL: Eksplosjonsfare ved feilaktig skifte av batteri. Benytt samme batteritype eller en tilsvarende type anbefalt av apparatfabrikanten. Brukte batterier kasseres i henhold til fabrikantens instruksjoner.

SWEDISH
VARNING: Explosionsfara vid felaktigt batteribyte. Använd samma batterityp eller en ekvivalent typ som rekommenderas av apparattillverkaren. Kassera använt batteri enligt fabrikantens instruktion.

FINNISH
VAROITUS: Paristo voi räjähtää, jos se on virheellisesti asennettu. Vaihda paristo ainoastaan valmistajan suosittelemaan tyyppiin. Hävitä käytetty paristo valmistajan ohjeiden mukaisesti.

ENGLISH
CAUTION: Danger of explosion if battery is incorrectly replaced. Replace only with the same or equivalent type recommended by the equipment manufacturer. Discard used batteries according to manufacturer's instructions.

DEUTSCH
VORSICHT: Explosionsgefahr bei unsachgemäßem Austausch der Batterie. Ersatz nur durch denselben oder einen vom Hersteller empfohlenen gleichwertigen Typ. Entsorgung gebrauchter Batterien nach Angaben des Herstellers.

FRENCH
ATTENTION: Il y a danger d'explosion s'il y a remplacement incorrect de la batterie. Remplacer uniquement avec une batterie du même type ou d'un type équivalent recommandé par le constructeur. Mettre au rebut les batteries usagées conformément aux instructions du fabricant.

Attention (for USA Users)

The product that you have purchased contains a rechargeable battery. The battery is recyclable. At the end of its useful life, under various state and local laws, it may be illegal to dispose of this battery into the municipal waste stream. Check with your local solid waste officials for details in your area for recycling options or proper disposal.

Caution Texts Concerning Coin Batteries

⚠ WARNING	
• **INGESTION HAZARD:** This product contains a button cell or coin battery. • **DEATH** or serious injury can occur if ingested. • A swallowed button cell or coin battery can cause **Internal Chemical Burns** in as little as **2 hours**. • **KEEP** new and used batteries **OUT OF REACH of CHILDREN**. • **Seek immediate medical attention** if a battery is suspected to be swallowed or inserted inside any part of the body.	

- The coin battery is not user replaceable. It must be replaced by Getac authorized service centers.
- Remove and immediately recycle or dispose of used batteries according to local regulations and keep away from children. Do NOT dispose of batteries in household trash or incinerate.

- Even used batteries may cause severe injury or death.
- Call a local poison control center for treatment information.
- Battery type: CR2016
- Nominal battery voltage: 3 V
- Non-rechargeable batteries are not to be recharged.
- Do not force discharge, recharge, disassemble, heat above 60 °C (140 °F), or incinerate. Doing so may result in injury due to venting, leakage or explosion resulting in chemical burns.
- Ensure the batteries are installed correctly according to polarity (+ and -).
- Do not mix old and new batteries, different brands or types of batteries, such as alkaline, carbon-zinc, or rechargeable batteries.
- Remove and immediately recycle or dispose of batteries from equipment not used for an extended period of time according to local regulations.
- Always completely secure the battery compartment. If the battery compartment does not close securely, stop using the product, remove the batteries, and keep them away from children.

About the AC Adapter

- Use only the AC adapter supplied with your computer. Use of another type of AC adapter will result in malfunction and/or danger.
- If a ground/earth pin attachment plug on the AC power cord is provided, always plug the cord into a grounded/earthed outlet. Do not disable ground/earth pin of the plug/cord.
- Do not use the adapter in a high moisture environment. Never touch the adapter when your hands or feet are wet.
- Allow adequate ventilation around the adapter when using it to operate the device or charge the battery. Do not cover the AC adapter with paper or other objects that will reduce cooling. Do not use the AC adapter while it is inside a carrying case.
- Connect the adapter to a proper power source. The voltage requirements are found on the product case and/or packaging.

- Do not use the adapter if the cord becomes damaged.
- Do not attempt to service the unit. There are no serviceable parts inside. Replace the unit if it is damaged or exposed to excess moisture.

Heat Related Concerns

Your device may become very warm during normal use. It complies with the user-accessible surface temperature limits defined by the International Standards for Safety. Still, sustained contact with warm surfaces for long periods of time may cause discomfort or injury. To reduce potential heat-related concerns, follow these guidelines:

- Keep your device and its AC adapter in a well-ventilated area when in use or charging. Allow for adequate air circulation under and around the device.
- Use common sense to avoid situations where your skin is in contact with your device or its AC adapter when it's operating or connected to a power source. For example, don't sleep with your device or its AC adapter, or place it under a blanket or pillow, and avoid contact between your body and your device when the AC adapter is connected to a power source. Take special care if you have a physical condition that affects your ability to detect heat against the body.
- If your device is used for long periods, its surface can become very warm. While the temperature may not feel hot to the touch, if you maintain physical contact with the device for a long time, for example if you rest the device on your lap, your skin might suffer a low-heat injury.
- If your device is on your lap and gets uncomfortably warm, remove it from your lap and place it on a stable work surface.
- Never place your device or AC adapter on furniture or any other surface that might be marred by exposure to heat since the base of your device and the surface of the AC adaptor may increase in temperature during normal use.

North America

USA

Federal Communications Commission Radio Frequency Interference Statement

NOTE:

This equipment has been tested and found to comply with the limits for a Class B digital device pursuant to Part 15 of the FCC Rules. These limits are designed to provide reasonable protection against harmful interference in a residential installation. This equipment generates, uses, and can radiate radio frequency energy and, if not installed and used in accordance with the instructions, may cause harmful interference to radio communications. However, there is no guarantee that interference will not occur in a particular installation. If this equipment does cause harmful interference to radio or television reception, which can be determined by turning the equipment off and on, the user is encouraged to try to correct the interference by one or more of the following measures:

- Reorient or relocate the receiving antenna.
- Increase the separation between the equipment and receiver.
- Connect the equipment into an outlet on a circuit different from that to which the receiver is connected.
- Consult the dealer or an experienced radio/TV technician for help.

Any changes or modifications not expressly approved by the manufacturer could void the user's authority to operate the equipment.

Please note:

The use of a non-shielded interface cable with this equipment is prohibited.

This device complies with Part 15 of the FCC Rules. Operation is subject to the following two conditions:

(1) This device may not cause harmful interference.

(2) This device must accept any interference received, including interference that may cause undesired operation.

FCC RF Exposure Information

This device has been tested and meets applicable limits for Radio Frequency (RF) exposure.

For general notebook computers in normal use, you (or any other person in the vicinity) should keep a minimum separation distance of 20 cm away from the front panel of the device to ensures that the RF exposure levels comply with the RF exposure requirement.

For devices designed to be operated at closer proximities, their antennas cannot satisfy the separation distance. Such devices are evaluated with the Specific Absorption Rate (SAR). You (or any other person in the vicinity) should keep a minimum separation distance of 25 mm away from the front panel of the device to ensures that the RF exposure levels comply with the RF exposure requirement.

Company name	Getac Inc.
Address	15495 Sand Canyon Rd., Suite 350 Irvine, CA 92618 USA
Phone	+1-949-681-2900

California Proposition 65

For California USA:

Proposition 65, a California law, requires warnings to be provided to California consumers when they might be exposed to chemical(s) identified by Proposition 65 as causing cancer and birth defects or other reproductive harm.

Almost all electronic products contain 1 or more of the chemicals listed under Proposition 65. This does not mean the products pose a significant risk of exposure. As the consumers have the right to know about the products they purchase, we are giving this warning on our packaging and user manual to keep our consumers well informed.

WARNING

This product can expose you to chemicals including lead, TBBPA or formaldehyde, which are known to the State of California to cause cancer and birth defects or other reproductive harm. For more information go to www.P65Warnings.ca.gov

Canada

Canadian ICES-003

CAN ICES-3(B)/NMB-3(B)

This device contains licence-exempt transmitter(s)/receiver(s) that comply with Innovation, Science and Economic Development Canada's licence-exempt RSS(s). Operation is subject to the following two conditions: (1) This device may not cause interference. (2) This device must accept any interference, including interference that may cause undesired operation of the device.

L'émetteur/récepteur exempt de licence contenu dans le présent appareil est conforme aux CNR d'Innovation, Sciences et Développement économique Canada applicables aux appareils radio exempts de licence. L'exploitation est autorisée aux deux conditions suivantes : 1) L'appareil ne doit pas produire de brouillage; 2) L'appareil doit accepter tout brouillage radioélectrique subi, même si le brouillage est susceptible d'en compromettre le fonctionnement.

The device could automatically discontinue transmission in case of absence of information to transmit, or operational failure. Note that this is not intended to prohibit transmission of control or signaling information or the use of repetitive codes where required by the technology.

L'appareil peut interrompre automatiquement la transmission en cas d'absence d'informations à transmettre ou de panne opérationnelle. Notez que ceci n'est pas destiné à interdire la transmission d'informations de contrôle ou de signalisation ou l'utilisation de codes répétitifs lorsque cela est requis par la technologie.

The device for operation in the band 5150–5250 MHz is only for indoor use to reduce the potential for harmful interference to co-channel mobile satellite systems.

l'appareil fonctionnant dans la bande 5150-5250 MHz est réservé à une utilisation en intérieur afin de réduire les risques de brouillage préjudiciable pour les systèmes mobiles par satellite dans le même canal.

User Notification of Take-back Service

To customers in United States and Canada:

Getac believes in providing our customers with easy-to-use solutions to recycle your Getac-brand products for free. Getac understands the customers will likely be recycling multiple items at once and as such. Getac wants to make the recycling process for these larger shipments as streamlined as possible. Getac works with recycling vendors with the highest standards for protecting our environment, ensuring worker safety, and complying with global environmental laws. Our commitment to recycling our old equipment grows out of our work to protect the environment in many ways. For more information, see the Getac Web site at https://www.getac.com/us/environmental-certifications/.

Please see the product type below for information on Getac product, battery and packaging recycling in USA and Canada.

- **For Product Recycling:**
  If you have a Getac computer that needs to go to a recycling house, Getac can help you. Just contact us at (866) 394 – 3822 or by email at **GUSA.RecycleProgram@getac.com** to obtain a prepaid shipping label at no charge to you, pack up your equipment in a box of your choice and send it off.
- **For Battery Recycling:**
  The batteries used to power your portable Getac products contain hazardous materials. While they pose no risk to you during normal use, they should never be disposed with other wastes. Getac provides a free take-back service for recycling your batteries from Getac products. To recycle the battery, please contact us at (866) 394 – 3822 or by email at **GUSA.RecycleProgram@getac.com**.
- **For Packaging Recycling:**
  Getac has chosen the packaging materials used to transport our products carefully, to balance the requirements of shipping the product to you safely while minimizing the amount of material used. Our packaging for notebooks and tablets is recyclable and manufactured using elemental chlorine-free processes. They contain 90 percent (by weight) recycled content. Your packaging materials can be recycled at your local recycling center. Or, if you would like Getac to recycle your packaging, please contact us at (866) 394 – 3822 and we will make arrangements for you.

If you have the above for recycling, please visit our website https://www.getac.com/us/environmental-certifications/

Europe Marking and Compliance Notices

Statements of Compliance

EU

English
Getac hereby declares that this product complies with the EU Directive 2014/53/EU. The full text of the EU declaration of conformity is available at:
https://support.getac.com/Portal/Page/809

Deutsch
Getac erklärt hiermit, dass Gerät mit den grundlegenden Anforderungen und anderen relevanten Bestimmungen der Richtlinie 2014/53/EU übereinstimmt. Der gesamte Text der EU Konformitätserklärung ist verfügbar unter:
https://support.getac.com/Portal/Page/846

Español
Por la presente, Getac declara que el producto cumple con la Directiva de la UE 2014/53/UE. El texto completo de la declaración UE de conformidad se encuentra a continuación.
https://support.getac.com/Portal/Page/866

Français
Getac déclare par la présente que cet appareil est conforme aux critères essentiels et autres clauses pertinentes de la directive 2014/53/EU. La déclaration de conformité de l'UE peut être téléchargée à partir du site internet suivant :
https://support.getac.com/Portal/Page/879

Italiano
Getac con la presente dichiara che questo dispositivo è conforme ai requisiti essenziali e alle altre disposizioni pertinenti con la direttiva 2014/53/EU. Il testo completo della dichiarazione di conformità UE è disponibile all'indirizzo:
https://support.getac.com/Portal/Page/892

UK

Hereby, Getac Technology Corporation declares that this device is in compliance with Radio Equipment Regulations 2017.

Notices

Max power:
LTE: 25 dBm
5GNR: 24.5 dBm
Wi-Fi 2400 MHz ~ 2483.5 MHz: 20 dBm
Wi-Fi 5150 MHz ~ 5350 MHz: 23 dBm
Wi-Fi 5470 MHz ~ 5725 MHz: 23 dBm
Wi-Fi 5725 MHz ~ 5850 MHz: 13.98 dBm
Wi-Fi 5945 MHz ~ 6425 MHz LPI: 23 dBm
Wi-Fi 5945 MHz ~ 6425 MHz VLP: 14 dBm
Bluetooth 2400 MHz ~ 2483.5 MHz: 20 dBm

The device is restricted to indoor use only when operating in the 5150 to 5350 MHz and 5945 to 6425 MHz frequency range.

	BE	BG	CZ	DK	DE	EE
	IE	EL	ES	FR	HR	IT
	CY	LV	LT	LU	HU	MT
	NL	AT	PL	PT	RO	SI
	SK	FI	SE	NO	IS	LI
	CH	TR	UK (NI)			

Restriction or Requirement in the UK: 5150 to 5350 MHz and 5925 to 6425 MHz indoor-use only.

	UK

	Waste Electrical and Electronic Equipment (WEEE) This symbol means that according to local laws and regulations your product shall be disposed of separately from household waste. When this product reaches its end of life, take it to a collection point designated by local authorities. Proper recycling of your product will protect human health and the environment.

	Battery Directive — Information for Users In the European Union, this label indicates that the batteries in this product should be collected separately and not be disposed of with household waste. Substances in batteries can have a potential impact on health and environment and you have a role in recycling waste batteries thus contributing to the protection, preservation, and improvement of the quality of the environment.

Restriction of Hazardous Substances (RoHS) Directive

EU RoHS

Getac products meet the requirements of Directive 2011/65/EU on the restriction of the use of certain hazardous substances in electrical and electronic equipment. For more information about RoHS, go to: https://www.getac.com/us/environment/

Company name	Getac Technology GmbH.
Address	Kanzlerstrasse 4 40472 Dusseldorf, Germany
Phone	+49 (0) 211-984819-0

Company name	Getac UK Ltd.
Address	Getac House, Stafford Park 12, Telford, Shropshire, TF3 3BJ, UK
Phone	+44 (0) 1952-207-222

This device has been tested and meets applicable limits for Radio Frequency (RF) exposure. This equipment should be installed and operated to ensure a minimum of 20 cm spacing to any person at all times.

Declaration of Conformity

See the CE/UK **Declaration of Conformity** document supplied in the package of your product.

ENERGY STAR

ENERGY STAR® is a government program that offers businesses and consumers energy-efficient solutions, making it easy to save money while protecting the environment for future generations.

Please reference ENERGY STAR® related information from http://www.energystar.gov.

As an ENERGY STAR® Partner, Getac Technology Corporation has determined that this product meets the ENERGY STAR® guidelines for energy efficiency.

All Getac products with ENERGY STAR® logo comply with the ENERGY STAR® standard, and the power management feature is enabled by default.
Getac's ENERGY STAR® qualified products are listed on the EPA website.
https://www.energystar.gov/products

About Battery and External Enclosure Replacement

Battery

The batteries of your product include a battery pack and a button cell (or called RTC battery). Select models have more than one battery pack. All batteries are available from Getac authorized service centers.

The battery pack is user-replaceable. Replacement instructions can be found in “Replacing the Battery Pack” in Chapter 3. The button cell must be replaced by Getac authorized service centers.

Visit the website at http://us.getac.com/support/support-select.html for authorized service center information.

External Enclosure

The external enclosure of the product can be removed using screwdrivers. The external enclosure can then be reused or refurbished.

The enclosure consists of the bottom case and the LCD back over. See below for information on how to remove the two parts.

To remove the bottom case:

Remove the screws as indicated below. Detach the bottom case.

To remove the LCD back over:

Remove the screws as indicated below. Open the LCD back cover and the LCD frame.