L13 Gen 2, L13 Yoga Gen 2, S2 Gen 6, and S2 Yoga Gen 6
User Guide

Read this first

Before using this documentation and the product it supports, ensure that you read and understand the following:

- Appendix A “Important safety information” on page 59
- *Safety and Warranty Guide*
- *Setup Guide*

Second Edition (June 2021)

© Copyright Lenovo 2020, 2021.

LIMITED AND RESTRICTED RIGHTS NOTICE: If data or software is delivered pursuant to a General Services Administration “GSA” contract, use, reproduction, or disclosure is subject to restrictions set forth in Contract No. GS-35F-05925.

Contents

Discover your Lenovo notebook iii

Chapter 1. Meet your computer 1
Front view 1
Side view 3
Bottom 5
Features and specifications 6
USB specifications 6

Chapter 2. Get started with your computer 9
Access networks 9
Connect to Wi-Fi networks 9
Connect to the wired Ethernet 9
Connect to a cellular network (for selected models) 9
Turn on the Airplane mode 10
Interact with your computer 10
Use the keyboard shortcuts 10
Use the TrackPoint pointing device 12
Use the trackpad 13
Use the touch screen (for selected models) . . 14
Connect to an external display 16
Get to know YOGA modes (for L13 Yoga Gen 2 and S2 Yoga Gen 6 only) 17
Use ThinkPad Pen Pro (for L13 Yoga Gen 2 and S2 Yoga Gen 6 only) 18

Chapter 3. Explore your computer . . 21
Lenovo apps 21
Smart features (for selected models) 21
Intelligent cooling 24
Manage power 24
Check the battery status 25
Charge the computer 25
Change the power settings 26
Transfer data 27
Set up a Bluetooth connection 27
Use a microSD card or smart card 27
Accessories 28
Purchase accessories 28
Docking station 28

Chapter 4. Secure your computer and information 33
Lock the computer 33
Use passwords 33
Password types 33
Set, change, and remove a password 35
Use Power Loss Protection function (for selected models) 36
Use the fingerprint reader (for selected models) . . 36
Use face authentication (for selected models) . . . 36

Chapter 5. Configure advanced settings 39
UEFI BIOS 39
What is UEFI BIOS 39
Enter the UEFI BIOS menu 39
Navigate in the UEFI BIOS interface 39
Change the startup sequence 39
Set the system date and time 40
Update UEFI BIOS 40
Recovery information 40
Restore system files and settings to an earlier point 40
Restore your files from a backup 40
Reset your computer 40
Use advanced options 41
Windows automatic recovery 41
Create and use a recovery USB device 41
Install Windows 10 and drivers 41

Chapter 6. CRU replacement 43
What are CRUs 43
Disable Fast Startup and the built-in battery 43
Replace a CRU 44
Base cover assembly 44
M.2 solid-state drive and bracket 45
Keyboard 48

Chapter 7. Help and support 53
Frequently asked questions 53
Error messages 54
Beep errors 55
Self-help resources 56
Call Lenovo 56
Before you contact Lenovo 56
Lenovo Customer Support Center 57
Purchase additional services 58

Appendix A. Important safety information 59

Appendix B. Accessibility and ergonomic information 73

© Copyright Lenovo 2020, 2021

Appendix C. Supplemental information about the Linux operating system 77

Appendix D. Compliance and TCO Certified information 79

Appendix E. Notices and trademarks 95

Discover your Lenovo notebook

Thank you for choosing a Lenovo® notebook! We are dedicated to delivering the best solution to you.

Before starting your tour, please read the following information:

- Illustrations in this documentation might look different from your product.
- Depending on the model, some optional accessories, features, software programs, and user interface instructions might not be applicable to your computer.
- Documentation content is subject to change without notice. To get the latest documentation, go to https://pcsupport.lenovo.com.

© Copyright Lenovo 2020, 2021

Chapter 1. Meet your computer

ThinkPad L13 Gen 2, ThinkPad L13 Yoga Gen 2, ThinkPad S2 Gen 6, and ThinkPad S2 Yoga Gen 6 might be shipped with different microprocessors, namely Intel® and Advanced Micro Devices (AMD). Hereby Intel models and AMD models are used to distinguish computer models with different microprocessors.

Front view

	Infrared camera* / Camera*		Webcam privacy shutter
	Microphone		TrackPoint® pointing stick
	Touch screen*		Fingerprint reader*

© Copyright Lenovo 2020, 2021

*	Smart-card slot*		Trackpad
	TrackPoint buttons		

* for selected models

Webcam privacy shutter

Slide the webcam privacy shutter to cover or uncover the camera lens. It is designed to protect your privacy.

Related topics

- “Use face authentication (for selected models)” on page 36
- “Use the touch screen (for selected models)” on page 14
- “Use the fingerprint reader (for selected models)” on page 36
- “Use the TrackPoint pointing device” on page 12
- “Use the trackpad” on page 13

Side view

Intel models

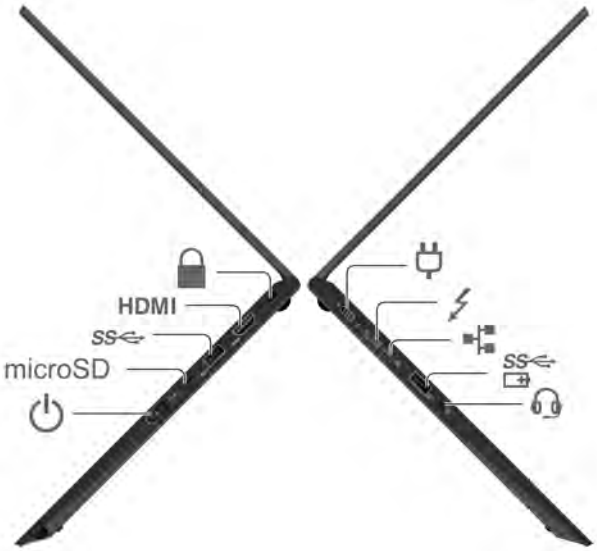

	USB-C® (Thunderbolt™ 4) power connector		USB-C (Thunderbolt 4) connector
	Ethernet connector		Always On USB 3.2 connector Gen 1
	Audio connector		Security-lock slot
HDMI	HDMI™ connector		USB 3.2 connector Gen 1
microSD	microSD-card slot		Power button

AMD models

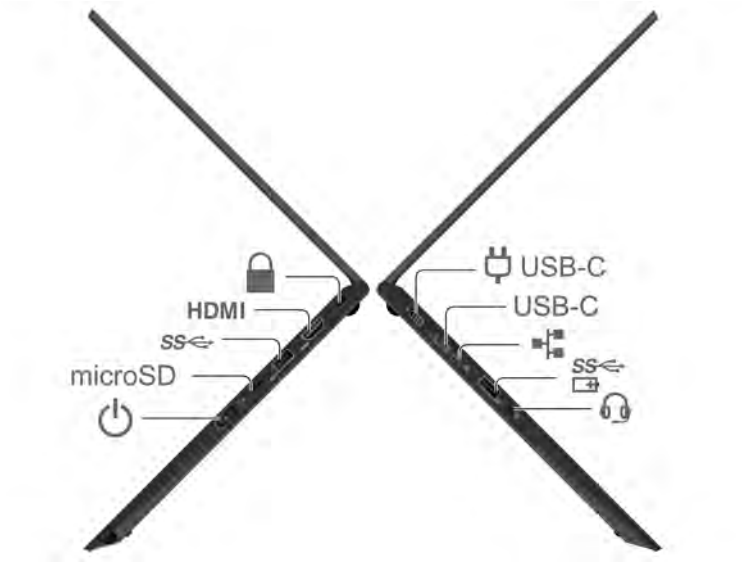

	USB-C power connector		Ethernet connector
	Always On USB 3.2 connector Gen 1		Audio connector
	Security-lock slot	HDMI	HDMI™ connector
	USB 3.2 connector Gen 1	microSD	microSD-card slot
	Power button		

Note: The Ethernet extension connector Gen 2 and the adjoining USB-C (Thunderbolt 4) connector cannot be used simultaneously.

Related topics

- “Charge the computer” on page 25
- “USB specifications” on page 6
- “Use a microSD card or smart card” on page 27
- “Lock the computer” on page 33

Bottom

	Emergency-reset hole		Speaker

Emergency-reset hole

If the computer stops responding and you cannot turn it off by pressing the power button, reset your computer:

1. Disconnect your computer from ac power.
2. Insert a straightened paper clip into the hole to cut off power supply temporarily.
3. Connect your computer to ac power and then turn on your computer.

CAUTION:
When the computer is operating, it should be placed on a hard and flat surface with its bottom area not in contact with user's bare skin. Under normal operating conditions, the temperature of the bottom surface will remain within an acceptable range as defined in *IEC 62368-1***, but such temperatures can still be high enough to cause discomfort or harm to the user if directly touched for over one minute at a time. As such, it is recommended that users avoid prolonged direct contact with the bottom of the computer.**

Note: Some Lenovo computers include a display that can be rotated 360 degrees. When those products are used as a tablet computer, the temperatures of all the accessible parts are within an acceptable range as defined in *IEC 62368-1*.

Features and specifications

For detailed specifications of your computer, go to https://psref.lenovo.com and search by product.

Dimensions	• Width: 311.3 mm (12.26 inches) • Depth: 219 mm (8.62 inches) • Thickness: 17.6 mm to 17.85 mm (0.69 inches to 0.70 inches)
Power source (ac power adapter)	• Sine-wave input at 50 Hz to 60 Hz • Input rating of the ac power adapter: 100 V to 240 V ac, 50 Hz to 60 Hz
Microprocessor	To view the microprocessor information of your computer, right-click the **Start** button and then click **System**.
Memory	Double data rate 4 (DDR4), soldered on board, up to 16GB
Storage device	One slot, 2242 or 2280 M.2 solid-state drive, up to 1TB
Audio	• Dolby Atomos Speaker • Dolby Voice
Display	• Color display with In-Plane Switching (IPS) or Twisted Nematic (TN) technology • Display ratio: 16:9 • Display resolution: 1366 x 768 pixels or 1920 x 1080 pixels • Multi-touch technology*
Security features	• Face authentication* • Fingerprint reader* • Security-lock slot • Trusted Platform Module (TPM)*
Wireless features	• Bluetooth • GPS (on wireless WAN model)* • Wireless LAN • Wireless WAN* **Note:** The 4G cellular service is provided by authorized mobile service carriers in some countries or regions. You must have a cellular plan from a service carrier to connect to the cellular network. The cellular data plan might vary by location.

* for selected models

USB specifications

Note: Depending on the model, some USB connectors might not be available on your computer.

Connector name	Description
 • USB 2.0 connector • USB 3.2 connector Gen 1 • USB 3.2 connector Gen 2	Connect USB-compatible devices, such as a USB keyboard, USB mouse, USB storage device, or USB printer.
 • USB-C (3.2 Gen 1) connector • USB-C (3.2 Gen 2) connector • USB-C (Thunderbolt 3) connector • USB-C (Thunderbolt 4) connector	• Charge USB-C compatible devices with the output voltage and current of 5 V and 3 A. • Connect to an external display: – USB-C to VGA: up to 1920 x 1200 pixels, 60 Hz – USB-C to DP: up to 5120 x 3200 pixels, 60 Hz • Connect to USB-C accessories to help expand your computer functionality. To purchase USB-C accessories, go to https://www.lenovo.com/accessories.

Statement on USB transfer rate

Depending on many factors such as the processing capability of the host and peripheral devices, file attributes, and other factors related to system configuration and operating environments, the actual transfer rate using the various USB connectors on this device will vary and will be slower than the data rate listed below for each corresponding device.

USB device	Data rate (Gbit/s)
3.2 Gen 1 / 3.1 Gen 1	5
3.2 Gen 2 / 3.1 Gen 2	10
3.2 Gen 2 × 2	20
Thunderbolt 3	40
Thunderbolt 4	40

Chapter 2. Get started with your computer

Access networks

This section helps you connect to a wireless or wired network.

Connect to Wi-Fi networks

Click the network icon in the Windows® notification area, and then select a network for connection. Provide required information, if needed.

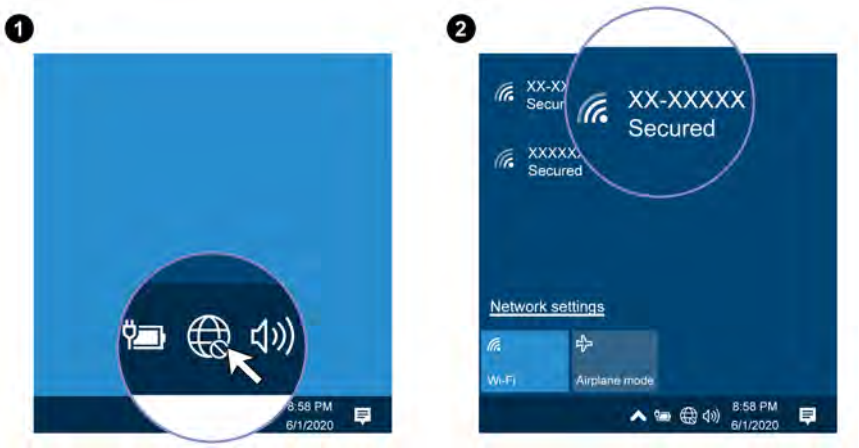

Connect to the wired Ethernet

Connect your computer to a local network with an Ethernet cable through the following accessories:

- Lenovo USB-C to Ethernet adapter
- ThinkPad Ethernet Extension Adapter Gen 2

You can also purchase a Lenovo USB-C to Ethernet adapter or ThinkPad Ethernet Extension Adapter Gen 2 from Lenovo at https://www.lenovo.com/accessories.

Connect to a cellular network (for selected models)

If your computer has a wireless wide area network (WAN) card and a nano-SIM card installed, you can connect to a cellular data network and get online everywhere.

Note: The cellular service is provided by authorized mobile service carriers in some countries or regions. You must have a cellular plan from a service carrier to connect to the cellular network.

To establish a cellular connection:

1. Turn off the computer.
2. Locate the nano-SIM card slot and insert the nano-SIM card as shown. Note the orientation of the card and ensure that it is seated correctly.

© Copyright Lenovo 2020, 2021

3. Turn on the computer.
4. Click the network icon, and then select the cellular network icon from the list. Provide required information, if needed.

Turn on the Airplane mode

When the Airplane mode is enabled, all wireless features are disabled.

1. Click the action center icon in the Windows notification area.
2. Click **Airplane mode** to turn on the Airplane mode.

Interact with your computer

Your computer provides you various ways to navigate the screen.

Use the keyboard shortcuts

The special keys on the keyboard help you work more effectively.

https://support.lenovo.com/us/en/videos/vid500145

Fn + Esc FnLock	Invoke the special function printed as an icon on each key or standard function of F1–F12 function keys. FnLock indicator on: standard function FnLock indicator off: special function
F1	Enable / disable speakers
F2	Decrease volume
F3	Increase volume
F4	Enable / disable microphones
F5	Darken display
F6	Brighten display
F7	Manage external displays

F8	Enable / disable wireless
F9	Open / collapse notification center
F10	Answer incoming calls This function only works with some apps, such as Skype for Business 2016 and Microsoft Teams 1.0. By default, the function works with Skype for Business 2016. You can change the default setting on the Vantage app.
F11	Decline incoming calls This function only works with some apps, such as Skype for Business 2016 and Microsoft Teams 1.0. By default, the function works with Skype for Business 2016. You can change the default setting on the Vantage app. **Note:** You can also press F11 to hang up ongoing calls on Skype for Business 2016.
F12	Open the Vantage app. You can customize the function of this key on the Vantage app.
Fn + PrtSc	Open Snipping Tool
Fn +	Toggle keyboard backlight (for selected models)
Fn + B	Break operation
Fn + P	Pause operation
Fn + K	Scroll contents
Fn + S	Send system request
Fn + 4	Enter sleep mode To wake up the computer, press Fn or the power button.
Fn + ←	Go to beginning
Fn + →	Go to end

Use the TrackPoint pointing device

The TrackPoint pointing device enables you to perform all the functions of a traditional mouse, such as pointing, clicking, and scrolling.

Use the TrackPoint pointing device

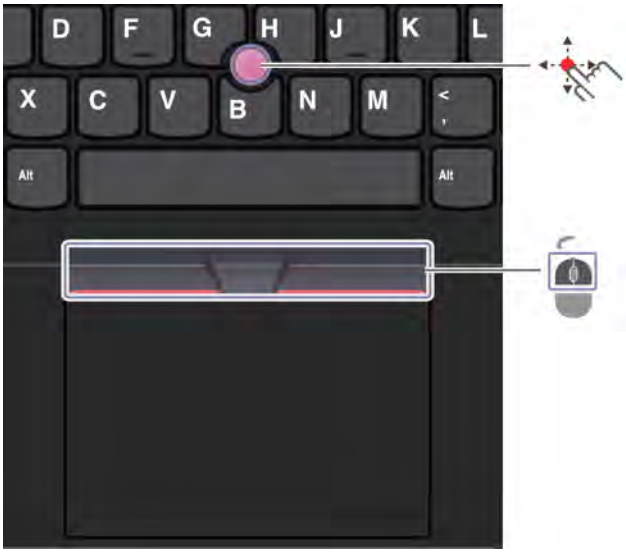

TrackPoint pointing stick

Use your finger to apply pressure to the pointing-stick nonslip cap in any direction parallel to the keyboard. The pointer on the screen moves accordingly. The higher the pressure applied, the faster the pointer moves.

TrackPoint buttons

The left-click button and right-click button correspond to the left and right buttons on a traditional mouse. Press and hold the dotted middle button while using your finger to applying pressure to the pointing stick in the vertical or horizontal direction. Then, you can scroll through the document, Web site, or apps.

Disable the TrackPoint pointing device

The TrackPoint pointing device is active by default. To disable the device:

1. Open the **Start** menu, and then click **Settings** → **Devices** → **Mouse**.
2. Follow the on-screen instructions to disable TrackPoint.

Replace the pointing-stick nonslip cap

Note: Ensure that the new cap has grooves a.

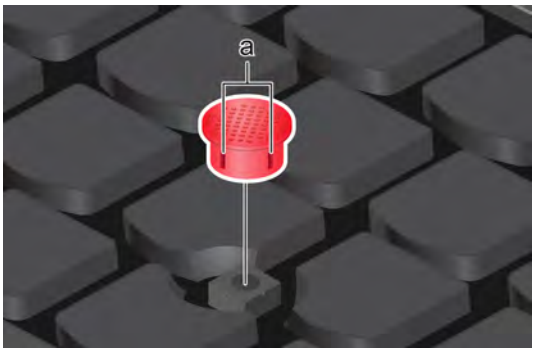

Use the trackpad

You can use the trackpad to perform all the pointing, clicking, and scrolling functions of a traditional mouse.

Use the trackpad

	Left-click zone		Right-click zone

Use the touch gestures

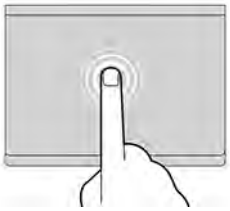

Tap once to select or open an item.

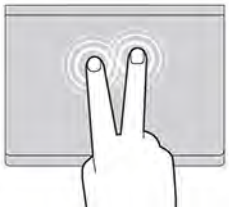

Tap twice quickly to display a shortcut menu.

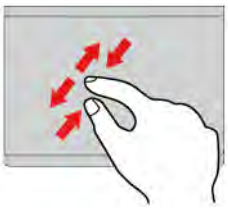

Two-finger zoom in or zoom out.

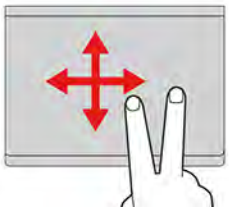

Scroll through items.

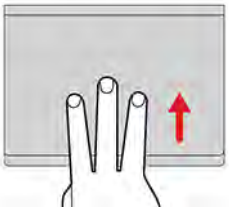

Open the task view to see all open windows.

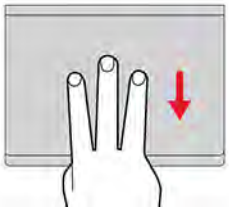

Show the desktop.

Notes:
- When using two or more fingers, ensure that you position your fingers slightly apart.
- Some gestures are not available if the last action was done from the TrackPoint pointing device.
- Some gestures are only available when you are using certain apps.
- If the trackpad surface is stained with oil, turn off the computer first. Then, gently wipe the trackpad surface with a soft and lint-free cloth moistened with lukewarm water or computer cleaner.

For more gestures, see the help information of the pointing device.

Disable the trackpad

The trackpad is active by default. To disable the device:

1. Open the **Start** menu, and then click **Settings** → **Devices** → **Touchpad**.
2. In the Touchpad section, turn off the **Touchpad** control.

Use the touch screen (for selected models)

If your computer display supports the multi-touch function, you can navigate the screen with simple touch gestures.

Note: Some gestures might not be available when you are using certain apps.

Tap once to single click

Tap twice quickly to double-click

Tap and hold to right-click

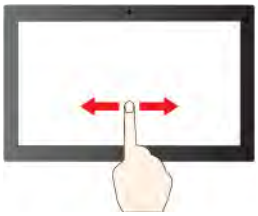

Slide to scroll through items

Zoom out

Zoom in

Swipe from the left: view all open windows

Swipe from the right: open action center

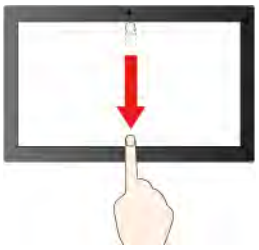

Swipe downwards shortly: show title bar

Swipe downwards: close the current app

Drag

Maintenance tips:

- Turn off the computer before cleaning the touch screen.
- Use a dry, soft, and lint-free cloth or a piece of absorbent cotton to remove fingerprints or dust from the touch screen. Do not apply solvents to the cloth.
- The touch screen is a glass panel covered with a plastic film. Do not apply pressure or place any metallic object on the screen, which might damage the touch panel or cause it to malfunction.
- Do not use fingernails, gloved fingers, or inanimate objects for input on the screen.
- Regularly calibrate the accuracy of the finger input to avoid a discrepancy.

Connect to an external display

Connect your computer to a projector or a monitor to give presentations or expand your workspace.

Connect to a wired display

1. Connect the external display to an appropriate video connector on your computer, such as the USB-C connector (USB 3.2 Gen 1), Thunderbolt connector, and HDMI connector.
2. Connect the external display to an electrical outlet.
3. Turn on the external display.

If your computer cannot detect the external display, right-click a blank area on the desktop, and then click **Display settings → Detect**.

Supported resolution

The following table lists the supported maximum resolution of the external display.

Connect the external display to	Supported resolution
the USB-C connector	Up to 5120 x 3200 pixels / 60 Hz
the Thunderbolt connector	Up to 5120 x 3200 pixels / 60 Hz
the HDMI connector	Up to 4096 x 2304 pixels / 60 Hz

Connect to a wireless display

To use a wireless display, ensure that both your computer and the external display support the Miracast® feature.

- Open the **Start** menu, and then click **Settings → Devices → Bluetooth & other devices → Add Bluetooth or other device**. In the Add a device window, click **Wireless display or dock**. Then, follow the instructions on the screen.
- Click the action center icon in the Windows notification area and click **Connect**. Select the wireless display and follow the on-screen instructions.

Set the display mode

Press F7 or Fn + F7 and then select a display mode of your preference.

- **Duplicate these displays**: Display the same video output on both your computer screen and an external display.
- **Extend these displays**: Extend the video output from your computer display to an external display. You can drag and move items between the two displays.

- **Show only on 1**: Display the video output only on your computer screen.
- **Show only on 2**: Display the video output only on an external display.

If you show programs using DirectDraw or Direct3D® in full-screen mode, only the main display shows the video output.

Change display settings

1. Right-click a blank area on the desktop and select **Display settings**.
2. Select the display that you want to configure.
3. Change display settings of your preference.

You can change the settings for both the computer display and the external display. For example, you can define which one is the main display and which one is the secondary display. You also can change the resolution and orientation.

Note: If you set a higher resolution for the computer display than the external display, only part of the screen can be displayed on the external display.

Get to know YOGA modes (for L13 Yoga Gen 2 and S2 Yoga Gen 6 only)

Your computer display can be rotated to any angle up to 360 degrees.

Attention: Do not rotate the computer display with too much force, or apply too much force to the upper-right or upper-left corner of the computer display. Otherwise the computer display or hinges might get damaged.

Your computer features the following four YOGA modes. You can switch among different modes according to your preference.

Note: The keyboard and the pointing devices are automatically disabled in the stand mode, tent mode, and tablet mode. Use the touch screen to control your computer instead.

Notebook mode

Stand mode

Tent mode

Tablet mode

Use ThinkPad Pen Pro (for L13 Yoga Gen 2 and S2 Yoga Gen 6 only)

The ThinkPad Pen Pro is an electronic pen stored in the pen slot. To use the pen, slide it out of the slot.

Notes:

- The ThinkPad Pen Pro is not waterproof. Keep the pen away from water and excessive moisture.
- To purchase the ThinkPad Pen Pro, go to https://www.lenovo.com/accessories.

Use the ThinkPad Pen Pro

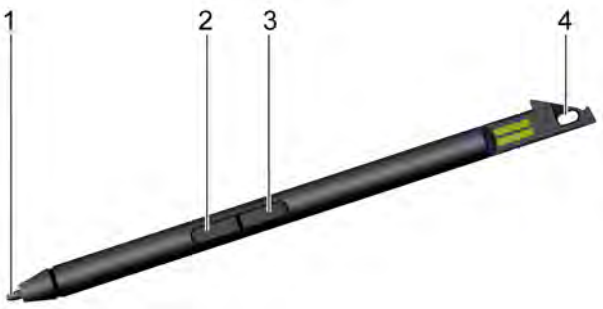

1 Tip

2 Eraser button

3 Right-click button

4 Pen tether hole

You can perform the following operations with the ThinkPad Pen Pro:

- To click or make a selection, tap the display once.
- To double-click, tap twice without pausing.
- To right-click, tap the tip 1 on the display and hold the pen there for one second. Alternatively, you can press and hold the right-click button 3 while tapping the tip 1 on the display.
- To erase ink, press and hold the eraser button 2, tap the tip 1 on the display, and drag the pen across the ink you want to erase.
- To protect your pen from loss, use a tether to tie the pen through the pen tether hole 4.

Check the battery status of the ThinkPad Pen Pro

1. Tap the pen tip on the computer screen before checking battery status of the pen. Otherwise, the battery status as shown in Lenovo Pen Settings might not be accurate.
2. Type `Lenovo Pen Settings` in the search box to open Lenovo Pen Settings. A battery icon is displayed on the upper right corner.
3. Move the mouse pointer on the battery icon to check the battery status.

If the battery of the pen is low, insert the pen back to the pen slot for charging.

Charge the ThinkPad Pen Pro

1. Ensure that your computer is on or in sleep mode.
2. Insert the pen back into the pen slot. The pen is 80% charged in about 15 seconds and 100% charged in about five minutes.

Chapter 3. Explore your computer

Lenovo apps

This section provides introduction to the Vantage and Lenovo Quick Clean apps.

The Vantage app

The preinstalled Vantage app is a customized one-stop solution to help you maintain your computer with automated updates and fixes, configure hardware settings, and get personalized support.

To access the Vantage app, type `Vantage` in the search box.

Key features

The Vantage app enables you to:

- Know the device status easily and customize device settings.
- Download and install UEFI BIOS, firmware, and driver updates to keep your computer up-to-date.
- Monitor your computer health, and secure your computer against outside threats.
- Scan your computer hardware and diagnose hardware problems.
- Look up warranty status (online).
- Access *User Guide* and helpful articles.

Notes:

- The available features vary depending on the computer model.
- The Vantage app makes periodic updates of the features to keep improving your experience with your computer. The description of features might be different from that on your actual user interface.

Lenovo Quick Clean

Depending on the model, your computer might support the Lenovo Quick Clean feature. The preinstalled Lenovo Quick Clean enables you to temporarily disable the keyboard, screen, trackpad, and TrackPoint pointing device for cleaning.

To access Lenovo Quick Clean, do one of the following:

- Open the Start menu and click **Lenovo Quick Clean**.
- Type `Lenovo Quick Clean` in the search box.
- Press Fn and the right Shift key at the same time.

To download the latest version of Lenovo Quick Clean, go to https://pcsupport.lenovo.com.

Smart features (for selected models)

Your computer might be preinstalled with Glance by Mirametrix. Glance can capture your head movement through camera and makes your computer smarter and more efficient.

© Copyright Lenovo 2020, 2021

Access Glance by Mirametrix

- Open the **Start** menu and click **Glance by Mirametrix**.
- Use Windows Search.

Note: If Glance is uninstalled, you can request it through https://support.lenovo.com/contactus.

Explore key features

Depending on the model, some features might not be available on your computer.

- **Protect privacy**
  - **Presence Detection**: Keep your computer awake when in use and automatically lock the computer when your head moves out of the camera range.

  - **Privacy Alert**: When a shoulder surfer is detected, an alert icon appears on your computer screen.

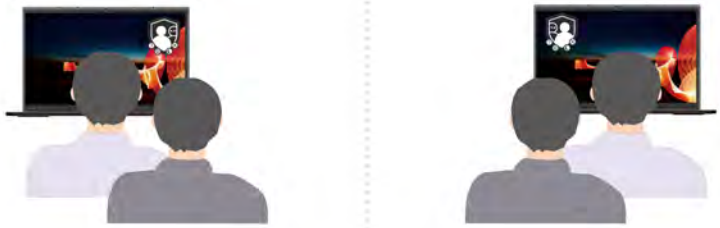

  - **Privacy Guard**: When a shoulder surfer is detected, your screen is blurred. Press Alt+F2 to cancel the blur effect.

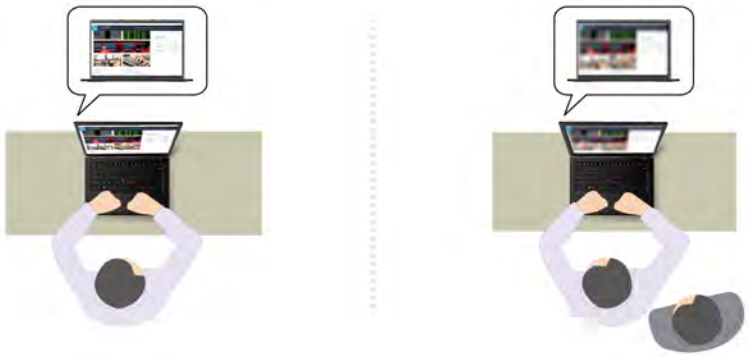

  - **Smart Display**: Blur screens you are not looking at. If you are not facing any screen, all screens are blurred. Press Alt+F2 to cancel the blur effect.

Note: If your computer comes with an ePrivacy screen, it can work with Glance to achieve better privacy protection. For details, go to https://support.lenovo.com/us/en/videos/vid500144.

- **Improve productivity**
  - **Snap Window**: When you select a window on one screen and turn your face to another, the window automatically snaps to the top center of the screen you are facing.

  - **Smart Pointer**: Relocate the pointer to the screen you are facing. When the pointer moves from one screen to another, it is temporarily drawn large.

Note: Snap Window and Smart Pointer only work when your computer is connected to external displays. Ensure that external displays are placed at the same height of your computer.

- **Promote digital wellness**
  - **Posture check**: Remind you to adjust your posture once you hunch toward the screen.
  - **20/20/20 Alert**: Remind you to look away from the screen and relax your eyes for 20 seconds every 20 minutes.

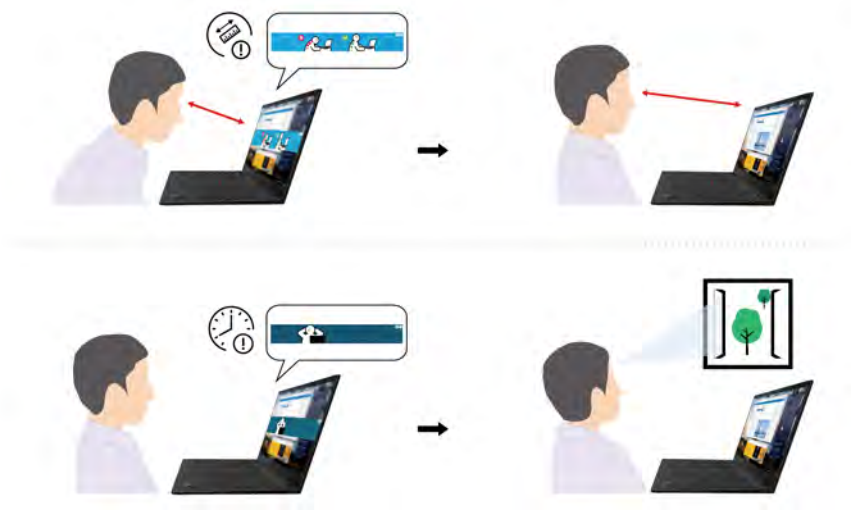

Intelligent cooling

The Intelligent Cooling feature helps you adjust fan speed, computer temperature and performance. This feature works in auto mode by default. Press Fn+T to switch between manual mode and auto mode.

Manual mode

- Quiet mode: the least fan noise
- Balanced mode: balanced performance and fan noise
- Performance mode: the highest performance and normal fan noise

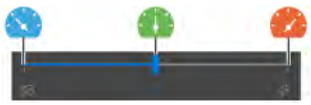

on ac power

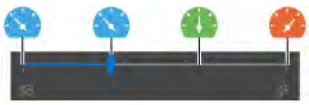

on battery power

Do the following to select the preferred mode:

1. Click the battery status icon in the Windows notification area.
2. Move the slider to the left or right to select your preferred mode.

Auto mode

- Auto battery mode: Switch between quiet mode and battery mode automatically based on the amount of system activity.
- Auto performance mode: Switch among quiet mode, balanced mode and performance mode automatically based on the amount of system activity.

Manage power

Use the information in this section to achieve the best balance between performance and power efficiency.

Check the battery status

Click the battery icon in the Windows notification area to check the battery status, view the current power plan, change the power mode, and access battery settings quickly. For more details about your battery, refer to the Vantage app.

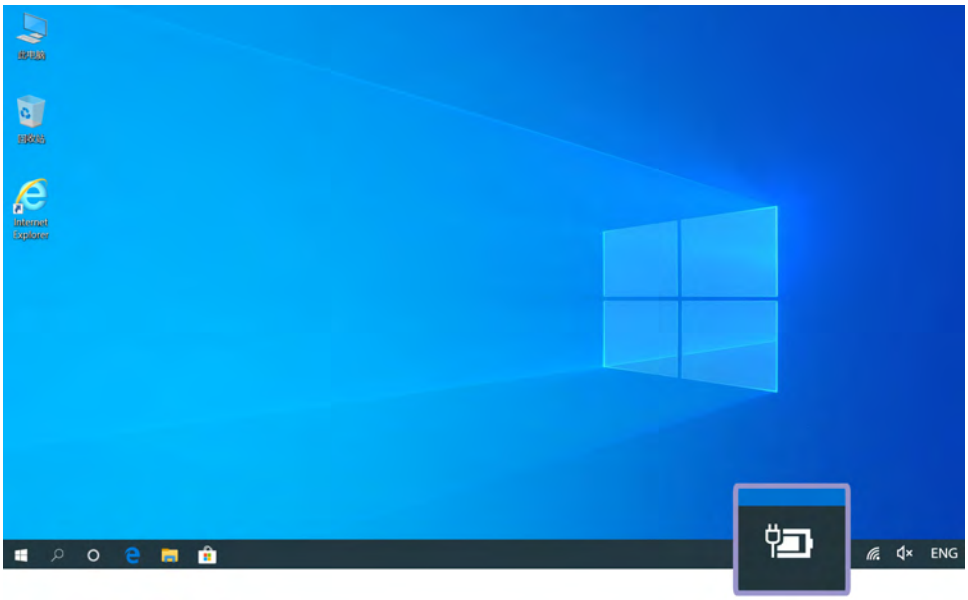

Charge the computer

Use ac power

Power source of the ac power adapter:

- Sine-wave input at 50 Hz to 60 Hz
- Input rating of the ac power adapter: 100 V to 240 V ac, 50 Hz to 60 Hz

Notes: To maximize the life of the battery:

- Use the battery until the charge is depleted and recharge the battery completely before using it. Once the battery is fully charged, it must discharge to 94% or lower before it will be allowed to recharge again.
- The battery may optimize its full charge capacity based on your usage. After prolonged periods of limited use, full battery capacity may not be available until you discharge to as low as 20% and recharge completely. For more information, refer to the power section of the Vantage app.

Use P-to-P 2.0 (Peer to Peer 2.0) charging function

Both USB-C (Thunderbolt 3) connectors on the computer feature the Lenovo-unique P-to-P 2.0 charging function. To use the function, ensure that **Always On USB** and **Charge in Battery Mode** are enabled in UEFI BIOS of your computers, so that the function works even when the computers are off or in hibernation mode.

To enable **Always On USB** and **Charge in Battery Mode**:

1. Press F1 to enter the UEFI BIOS menu.
2. Click **Config → USB**, and then to enable **Always On USB** and **Charge in Battery Mode**.

- **When no ac power is available:**

Note: The remaining battery power of computer A should be at least 30% and be 3% higher than that of computer B.

- **When ac power is available:**

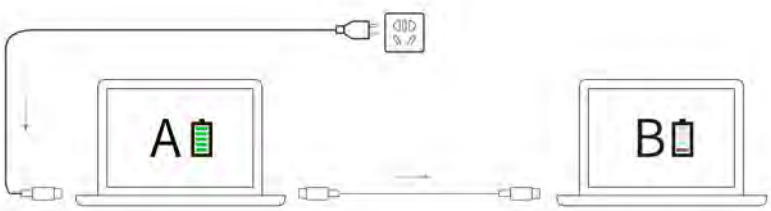

Note: The actual charging speed of your computer depends on many factors, such as the remaining battery power of the computers, the wattage of the ac power adapter, and whether you are using the computers.

Change the power settings

For ENERGY STAR® compliant computers, the following power plan takes effect when your computer has been idle for a specified duration:

- Turn off the display: After 10 minutes
- Put the computer to sleep: After 10 minutes

To reset the power plan:

1. Right-click the battery status icon and select **Power Options**.
2. Choose or customize a power plan of your preference.

To reset the power button function:

1. Right-click the battery status icon and select **Power Options → Change what the power buttons do**.
2. Change the settings as you prefer.

Transfer data

Quickly share your files using the built-in Bluetooth or NFC technology among devices with the same features. You also can insert a microSD card or smart card to transfer data.

Set up a Bluetooth connection

You can connect all types of Bluetooth-enabled devices to your computer, such as a keyboard, a mouse, a smartphone, or speakers. To ensure successful connection, place the devices at most 10 meters (33 feet) from the computer.

1. Click the action center icon in the Windows notification area, and enable the Bluetooth feature.
2. Right-click the **Bluetooth** icon.
3. Select **Go To Settings → Add Bluetooth or other device → Bluetooth**.
4. Select a Bluetooth device, and then follow the on-screen instructions.

Use a microSD card or smart card

If your computer has a media-card slot or smart-card slot, read the following information.

Supported smart card

Supported smart card specifications: 85.60 mm (3.37 inches) x 53.98 mm (2.13 inches)

Attention: Smart cards with slits are not supported. Do not insert such a smart card into the smart-card reader of your computer. Otherwise, the reader might get damaged.

Install the card

1. Insert the card firmly into the card slot until it is secured in place.

   Notes:

   - For the microSD card, ensure that the metal contacts are facing down and pointing toward the card slot.
   - For the smart card, ensure that the metal contacts are facing upward and pointing toward the card slot.

Remove the card

Attention: Before removing a card, eject the card from the Windows operating system first. Otherwise, data on the card might get corrupted or lost.

1. Click the triangular icon in the Windows notification area to show hidden icons. Then, right-click the **Safely Remove Hardware and Eject Media** icon.
2. Select the corresponding item to eject the card from the Windows operating system.

3. Press the card and remove it from your computer. Store the card safely for future use.

Accessories

This section provides instructions on how to use hardware accessories to expand your computer functionalities.

Purchase accessories

Lenovo has a number of hardware accessories and upgrades to help expand the functionalities of your computer. Options include memory modules, storage devices, network cards, port replicators or docking stations, batteries, power adapters, keyboards, mice, and more.

To shop at Lenovo, go to https://www.lenovo.com/accessories.

Docking station

You can use the following docking stations to extend the capacity of your computer:

- ThinkPad Basic Docking Station
- ThinkPad Pro Docking Station
- ThinkPad Ultra Docking Station

Side connectors of docking stations

Figure 1. ThinkPad Basic Docking Station

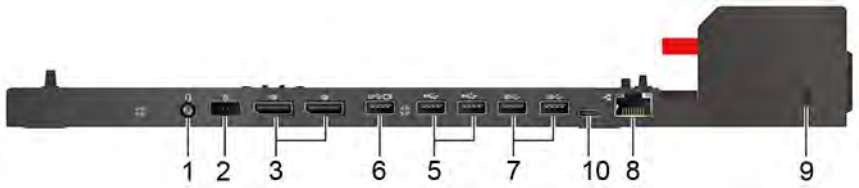

Figure 2. ThinkPad Pro Docking Station

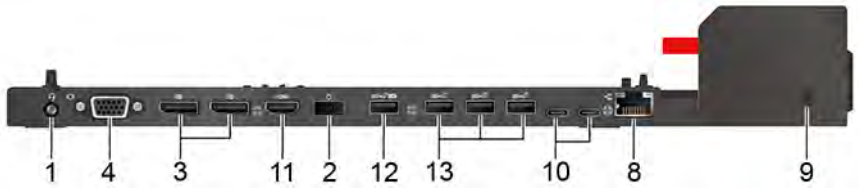

Figure 3. ThinkPad Ultra Docking Station

1. Audio connector	2. ac power connector
3. DisplayPort® connector	4. VGA connector

5. USB 2.0 connector	6. Always On USB 3.2 connector Gen 1
7. USB 3.2 connector Gen 1	8. Ethernet connector
9. Security-lock slot	10. USB-C connector
11. HDMI connector	12. Always On USB 3.2 connector Gen 2
13. USB 3.2 connector Gen 2	

Attach a docking station

Notes:

- ThinkPad Basic Docking Station does not ship with a system lock installed. If you do not purchase and install a system lock, skip step 4 and step 7 in the following instruction.
- If you do not connect the docking station to ac power, the computer attached runs on battery power.

1. Connect the docking station to ac power.
2. Disconnect the cables and devices from the left side of the computer.
3. Turn the system lock key to the unlocked position (2🔓).

4. Align the top-left corner of the computer with the guide post of the docking station. Attach your computer to the docking station as shown **1** until you hear a click. Slide the latch in the direction as shown **2**.

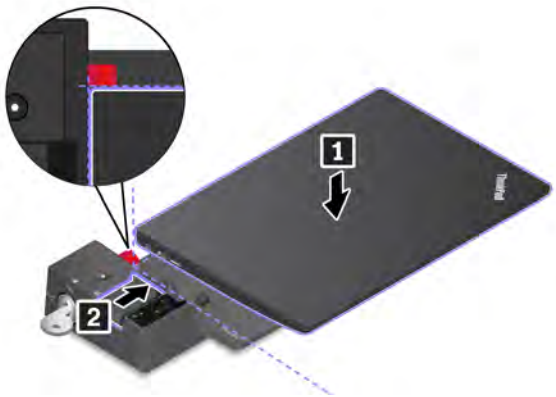

5. Check the docking status indicator. The docking status indicator turns on when the computer is successfully docked.

   Note: If the indicator is off, your computer is not attached to the docking station successfully. To solve the problem, detach and reattach the computer.

6. Turn the system lock key to the locked position (1🔒).

Attention: When the computer is attached to a docking station, always hold the whole assembly when you need to move your computer. Otherwise, the docking station might drop down.

Detach a docking station

Note: ThinkPad Basic Docking Station does not ship with a system lock installed. If you do not purchase and install a system lock, skip step 1 in the following instruction.

1. Turn the system lock key to the unlocked position (2🔓).

2. Slide the latch in the direction as shown 1 to release the computer, and then grasp both sides of the computer to remove it 2.

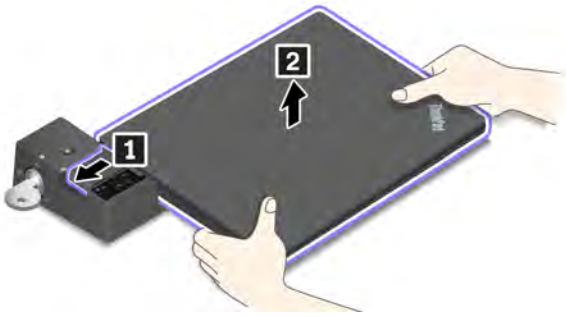

Connect multiple external displays

You can connect multiple external displays to a supported docking station. To ensure that the multiple displays work correctly, refer to the following table and connect the external displays to the appropriate connectors.

Docking station	Connectors supporting external displays
ThinkPad Basic Docking Station	DisplayPort VGA
ThinkPad Pro Docking Station	DisplayPort (x2)
ThinkPad Ultra Docking Station	DisplayPort (x2) HDMI VGA

Chapter 4. Secure your computer and information

Lock the computer

Lock your computer to a desk, table, or other fixtures through a compatible security cable lock.

Note: You are responsible for evaluating, selecting, and implementing the locking device and security feature. Lenovo makes no comments, judgments, or warranties about the function, quality, or performance of the locking device and security feature. Cable locks for your product are available from Lenovo at https://www.lenovoquickpick.com.

Use passwords

This section introduces types of passwords in UEFI (Unified Extensible Firmware Interface) BIOS (Basic Input/Output System) and how to set, change, and remove a password.

Password types

You can set a power-on password, supervisor password, system management password, or hard disk password in UEFI BIOS to prevent unauthorized access to your computer. However, you are not prompted to enter any UEFI BIOS password when your computer resumes from sleep mode.

Power-on password

If you set a power-on password, a window is displayed on the screen when you turn on the computer. Enter the correct password to use the computer.

Supervisor password

The supervisor password protects the system information stored in UEFI BIOS. When entering the UEFI BIOS menu, enter the correct supervisor password in the window prompted. You also can press Enter to

© Copyright Lenovo 2020, 2021

skip the password prompt. However, you cannot change most of the system configuration options in UEFI BIOS.

If you have set both the supervisor password and power-on password, you can use the supervisor password to access your computer when you turn it on. The supervisor password overrides the power-on password.

System management password

The system management password can also protect the system information stored in UEFI BIOS like a supervisor password, but it has lower authority by default. The system management password can be set through the UEFI BIOS menu or through Windows Management Instrumentation (WMI) with the Lenovo client-management interface.

You can enable the system management password to have the same authority as the supervisor password to control security related features. To customize the authority of the system management password through the UEFI BIOS menu:

1. Enter the UEFI BIOS menu. See “Enter the UEFI BIOS menu” on page 39.

   Note: When you are prompted to enter the password, enter the correct supervisor password if a supervisor password has been set, or enter the correct system management password if no supervisor password has been set. Otherwise, you cannot change the configurations in the following steps.
2. Select **Security → Password → System Management Password Access Control**.
3. Follow the on-screen instructions.

If you have set both the supervisor password and the system management password, the supervisor password overrides the system management password. If you have set both the system management password and the power-on password, the system management password overrides the power-on password.

Hard disk passwords

The hard disk password prevents unauthorized access to the data on the storage drive. When a hard disk password is set, you are prompted to type a correct password each time you try to access the storage drive.

To set the hard disk password, select one of the following types:

- **User hard disk password only**

  When a user hard disk password is set without a master hard disk password, the user must enter the user hard disk password to access files and applications on the storage drive.
- **Master hard disk password + User hard disk password**

  The master hard disk password is set and used by a system administrator. It enables the administrator to access any storage drive in a system or any computer connected in the same network. The administrator can also assign a user hard disk password for each computer in the network. The user of the computer can change the user hard disk password as desired, but only the administrator can remove the user hard disk password.

When prompted to enter a hard disk password, press F1 to switch between the master hard disk password and user hard disk password.

Note: The hard disk password is not available in the following situations:

- A Trusted Computing Group (TCG) Opal-compliant storage drive and a TCG Opal management software program are installed in the computer, and the TCG Opal management software program is activated.
- An eDrive storage drive is installed in the computer preinstalled with the Windows 10 operating system.

Set, change, and remove a password

Before you start, print these instructions.

1. Restart the computer. When the logo screen is displayed, press F1 to enter the UEFI BIOS menu.
2. Select **Security → Password** by using the arrow keys.
3. Select the password type. Then, follow the on-screen instructions to set, change, or remove a password.

You should record all your passwords and store them in a safe place. If you forget any of your passwords, any potential repair actions required are not covered under warranty.

What to do if you forget your power-on password

If you forget your power-on password, do the following to remove the power-on password:

- If you have set a supervisor password and remember it:
  1. Restart the computer. When the logo screen is displayed, immediately press F1.
  2. Type the supervisor password to enter the UEFI BIOS menu.
  3. Select **Security → Password → Power-On Password** by using the arrow keys.
  4. Type the current supervisor password in the **Enter Current Password** field. Then, leave the **Enter New Password** field blank, and press Enter twice.
  5. In the Changes have been saved window, press Enter.
  6. Press F10 to save changes and exit the UEFI BIOS menu.
- If you have not set a supervisor password, contact a Lenovo authorized service provider to have the power-on password removed.

What to do if you forget your hard disk password

If you forget your user hard disk password or both user and master hard disk passwords, Lenovo cannot reset your passwords or recover data from the storage drive. You can contact a Lenovo authorized service provider to have the storage drive replaced. A fee will be charged for parts and service. If the storage drive is a CRU (Customer Replaceable Unit), you can also contact Lenovo to purchase a new storage drive to replace the old one by yourself. To check whether the storage drive is a CRU and the relevant replacement procedure, see Chapter 6 “CRU replacement” on page 43.

What to do if you forget your supervisor password

If you forget your supervisor password, there is no service procedure to remove the password. You have to contact a Lenovo authorized service provider to have the system board replaced. A fee will be charged for parts and service.

What to do if you forget your system management password

If you forget your system management password, do the following to remove the system management password:

- If you have set a supervisor password and remember it:
  1. Restart the computer. When the logo screen is displayed, immediately press F1.
  2. Type the supervisor password to enter the UEFI BIOS menu.
  3. Select **Security → Password → System Management Password** by using the arrow keys.
  4. Type the current supervisor password in the **Enter Current Password** field. Then, leave the **Enter New Password** field blank, and press Enter twice.
  5. In the Changes have been saved window, press Enter.

6. Press F10 to save changes and exit the UEFI BIOS menu.

- If you have not set a supervisor password, contact a Lenovo authorized service provider to have the system management password removed.

Use Power Loss Protection function (for selected models)

For models shipped with an NVMe (Non-Volatile Memory express) M.2 solid-state drive, the M.2 solid-state drive features the Lenovo-unique PLP (Power Loss Protection) function to avoid data loss or damage. On very rare occasions, your computer is not responding and you might have to shut down your computer by pressing and holding the power button for about seven seconds. In this case, the PLP function enables key data of your computer to be saved timely. However, there is no guarantee that all data is saved in any situation. To check the type of your M.2 solid-state drive:

1. Restart the computer. When the logo screen is displayed, press F10 to enter the Lenovo diagnostics window.
2. On the TOOLS tab, select **SYSTEM INFORMATION → STORAGE** using the arrow keys.
3. Locate the **Device Type** section to check the information.

Use the fingerprint reader (for selected models)

If your computer comes with a fingerprint reader, you can use it to enroll your fingerprints. After enrollment, you can tap your finger on the fingerprint reader to log in to Windows.

Enroll your fingerprints

Open the Start menu and then click **Settings → Accounts → Sign-in options**. Then, follow the on-screen instructions to finish the enrollment.

During the enrollment, the fingerprints are associated with the Windows password automatically. It is recommended that you put your finger at the middle of the fingerprint reader during enrollment and enroll more than one fingerprint in case of any injuries to your fingers.

Log in with your fingerprint

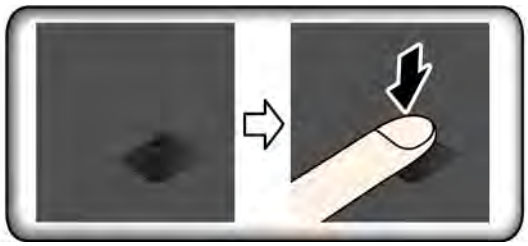

Maintain the fingerprint reader

To ensure that the fingerprint reader works correctly, do not:

- Scratch the surface of the reader with anything hard.
- Use or touch the reader with a wet, dirty, wrinkled, or injured finger.

Use face authentication (for selected models)

If your computer comes with a Windows Hello-compatible infrared camera, you can unlock your computer by scanning your face instead of using a password.

Create face ID

1. Open the **Start** menu and click **Settings** → **Accounts** → **Sign-in options**.
2. Locate the **Password** section and click **Add** to create a password.
3. Locate the **Windows Hello Face** section and click **Set up** under **Face Recognition**. Then, click **Get Started**.The camera preview starts.
4. Follow the on-screen instructions to create a Personal Identification Number (PIN) and complete the setup.
5. Click **Improve Recognition** to improve the image so that **Windows Hello** can recognize you in different light conditions or when your appearance changes.

Log in with face authentication

1. On the Windows lock screen, select the smiling face icon from the sign-in options.
2. Follow the on-screen instructions and ensure that you are centered and looking directly at the camera. When the program recognizes your face, it automatically unlocks the screen and signs you in to the Windows operating system.

Chapter 5. Configure advanced settings

This chapter provides information about UEFI BIOS, RAID, recovery, operating system installation, and system management.

UEFI BIOS

This section introduces what is UEFI BIOS and the operations you can perform in UEFI BIOS.

What is UEFI BIOS

UEFI BIOS is the first program that the computer runs when the computer is turned on. UEFI BIOS initializes the hardware components and loads the operating system and other programs. Your computer comes with a setup program with which you can change UEFI BIOS settings.

Enter the UEFI BIOS menu

Restart the computer. When the logo screen is displayed, press F1 to enter the UEFI BIOS menu.

Note: If you have set the supervisor password, enter the correct password when prompted. You also can press Enter to skip the password prompt and enter the UEFI BIOS menu. However, you cannot change the system configurations that are protected by the supervisor password.

Navigate in the UEFI BIOS interface

Attention: The default configurations are already optimized for you in **boldface**. Improper change of the configurations might cause unexpected results.

You can navigate in the UEFI BIOS interface by pressing the following keys:

F1	Display the General Help screen.
F9	Restore to the default settings.
F10	Save your configuration and exit.
F5 / –	Change to a lower value.
F6 / +	Change to a higher value.
↑ ↓	Locate an item.
← →	Select a tab.
Esc	Exit the submenu and return to the parent menu.
Enter	Enter the selected tab or submenu.

Change the startup sequence

1. Restart the computer. When the logo screen is displayed, press F1.
2. Select **Startup → Boot**. Then, press Enter. The default device order list is displayed.

   Note: No bootable device is displayed if the computer cannot start from any devices or the operating system cannot be found.
3. Set the startup sequence as desired.

© Copyright Lenovo 2020, 2021

4. Press F10 to save the changes and exit.

To change the startup sequence temporarily:

1. Restart the computer. When the logo screen is displayed, press F12.
2. Select the device that you want the computer to start from and press Enter.

Set the system date and time

1. Restart the computer. When the logo screen is displayed, press F1.
2. Select **Date/Time** and set the system date and time as desired.
3. Press F10 to save changes and exit.

Update UEFI BIOS

When you install a new program, device driver, or hardware component, you might need to update UEFI BIOS.

Download and install the latest UEFI BIOS update package by one of the following methods:

- Open the Vantage app to check the available update packages. If the latest UEFI BIOS update package is available, follow the on-screen instructions to download and install the package.
- Go to https://pcsupport.lenovo.com and select the entry for your computer. Then, follow the on-screen instructions to download and install the latest UEFI BIOS update package.

Recovery information

This section introduces the recovery information of the Windows 10 operating system. Ensure that you read and follow the on-screen recovery instructions. The data on your computer might be deleted during the recovery process. To avoid data loss, make a backup copy of all the data that you want to keep.

Restore system files and settings to an earlier point

1. Go to **Control Panel** and view by Large icons or Small icons.
2. Click **Recovery** → **Open System Restore**. Then, follow the on-screen instructions.

Restore your files from a backup

Note: If you use the File History tool to restore your files from a backup, ensure that you backed up your data earlier with the tool.

1. Go to **Control Panel** and view by Large icons or Small icons.
2. Click **File History** → **Restore personal files**. Then, follow the on-screen instructions.

Reset your computer

In the resetting process, you can choose to keep your files or remove them when you reinstall the operating system.

Note: The items in the graphical user interface (GUI) might change without notice.

1. Open the **Start** menu, and then click **Settings** → **Update & Security** → **Recovery**.
2. In the **Reset this PC** section, click **Get started**.
3. Follow the on-screen instructions to reset your computer.

Use advanced options

Note: The items in the graphical user interface (GUI) might change without notice.

1. Open the **Start** menu, and then click **Settings** → **Update & security** → **Recovery**.
2. In the **Advanced startup** section, click **Restart now** → **Troubleshoot** → **Advanced options**.
3. Select a preferred option, and then follow the on-screen instructions.

Windows automatic recovery

Note: Ensure that your computer is connected to ac power during the recovery process.

The Windows recovery environment on your computer operates independently from the Windows 10 operating system. It enables you to recover or repair the operating system even if the Windows 10 operating system fails to start.

After two consecutive failed boot attempts, the Windows recovery environment starts automatically. Then you can choose repair and recovery options by following the on-screen instructions.

Create and use a recovery USB device

It is recommended that you create a recovery USB drive as early as possible as a backup for the Windows recovery programs. With the recovery USB drive, you can troubleshoot and fix the problems even if the preinstalled Windows recovery programs are damaged. If you did not create a recovery USB drive as a precautionary measure, you can contact Lenovo Customer Support Center and purchase one from Lenovo. For a list of the Lenovo Support phone numbers for your country or region, go to:

https://pcsupport.lenovo.com/supportphonelist

Create a recovery USB drive

Attention: The creation process deletes anything stored on the USB drive. To avoid data loss, make a backup copy of all the data that you want to keep.

1. Ensure that your computer is connected to ac power.
2. Prepare a USB drive with at least 16 GB of storage capacity. The actual USB capacity required depends on the size of the recovery image.
3. Connect the prepared USB drive to the computer.
4. Type `recovery` in the search box. Then, click **Create a recovery drive**.
5. Click **Yes** in the User Account Control window to allow the Recovery Media Creator program to start.
6. In the Recovery Drive window, follow the on-screen instructions to create a recovery USB drive.

Use the recovery USB drive

1. Ensure that your computer is connected to ac power.
2. Connect the recovery USB drive to the computer.
3. Turn on or restart the computer. When the logo screen is displayed, press F12. The Boot Menu window opens.
4. Select the recovery USB drive as the boot device. Then, follow the on-screen instructions to complete the process.

Install Windows 10 and drivers

This section provides instructions on installing a Windows 10 operating system and device drivers.

Install a Windows 10 operating system

Microsoft constantly makes updates to the Windows 10 operating system. Before installing a particular Windows 10 version, check the compatibility list for the Windows version. For details, go to https://support.lenovo.com/us/en/solutions/windows-support.

Attention:

- It is recommended that you update your operating system through official channels. Any unofficial update might cause security risks.
- The process of installing a new operating system deletes all the data on your internal storage drive, including the data stored in a hidden folder.

1. If you are using the Windows BitLocker Drive Encryption feature and your computer has a Trusted Platform Module, ensure that you have disabled the feature.
2. Ensure that the security chip is set to **Active**.
   a. Restart the computer. When the logo screen is displayed, press F1 to enter the UEFI BIOS menu.
   b. Select **Security** → **Security Chip** and press Enter. The **Security Chip** submenu opens.
   c. Ensure that the security chip for TPM 2.0 is set to **Active**.
   d. Press F10 to save the settings and exit.
3. Connect the drive that contains the operating system installation program to the computer.
4. Restart the computer. When the logo screen is displayed, press F1 to enter the UEFI BIOS menu.
5. Select **Startup** → **Boot** to display the **Boot Priority Order** submenu.
6. Select the drive that contains the operating system installation program, for example, **USB HDD**. Then, press Esc.

   Attention: After you change the startup sequence, ensure that you select the correct device during a copy, a save, or a format operation. If you select the wrong device, the data on that device might be erased or overwritten.
7. Select **Restart** and ensure that **OS Optimized Defaults** is enabled. Then, press F10 to save the settings and exit.
8. Follow the on-screen instructions to install the device drivers and necessary programs.
9. After installing the device drivers, apply Windows Update to get the latest updates, for example the security patches.
10. Go to Microsoft Store to download and install the latest version of Lenovo Vantage.

Install device drivers

You should download the latest driver for a component when you notice poor performance from that component or when you added a component. This action might eliminate the driver as the potential cause of a problem. Download and install the latest driver by one of the following methods:

- Open the Vantage app to check the available update packages. Select the update packages you want, and then follow the on-screen instructions to download and install the packages.
- Go to https://pcsupport.lenovo.com and select the entry for your computer. Then, follow the on-screen instructions to download and install necessary drivers and software.

Chapter 6. CRU replacement

What are CRUs

Customer Replaceable Units (CRUs) are parts that can be upgraded or replaced by the customer. The computers contain the following types of CRUs:

- **Self-service CRUs:** Refer to parts that can be installed or replaced easily by customer themselves or by trained service technicians at an additional cost.
- **Optional-service CRUs:** Refer to parts that can be installed or replaced by customers with a greater skill level. Trained service technicians can also provide service to install or replace the parts under the type of warranty designated for the customer's machine.

If you intend on installing a CRU, Lenovo will ship the CRU to you. CRU information and replacement instructions are shipped with your product and are available from Lenovo at any time upon request. You might be required to return the defective part that is replaced by the CRU. When return is required: (1) return instructions, a prepaid shipping label, and a container will be included with the replacement CRU; and (2) you might be charged for the replacement CRU if Lenovo does not receive the defective CRU within thirty (30) days of your receipt of the replacement CRU. For full details, see the Lenovo Limited Warranty documentation at https://www.lenovo.com/warranty/llw_02.

Refer to the following CRU list for your computer.

Self-service CRUs

- ac power adapter
- Power cord
- ThinkPad Pen Pro (for L13 Yoga Gen 2 / S2 Yoga Gen 6 only)

Optional-service CRUs

- Base cover assembly
- Keyboard
- M.2 solid-state drive
- M.2 solid-state drive bracket*

* for selected models

Note: Replacement of any parts not listed above, including the built-in rechargeable battery, must be done by a Lenovo-authorized repair facility or technician. Go to https://support.lenovo.com/partnerlocation for more information.

Disable Fast Startup and the built-in battery

Before replacing any CRU, ensure that you disable Fast Startup first and then disable the built-in battery.

To disable Fast Startup:

1. Go to **Control Panel** and view by Large icons or Small icons.
2. Click **Power Options**, and then click **Choose what the power buttons do** on the left pane.
3. Click **Change settings that are currently unavailable** at the top.
4. If prompted by User Account Control (UAC), click **Yes**.

© Copyright Lenovo 2020, 2021

5. Clear the **Turn on fast startup** check box, and then click **Save changes**.

To disable the built-in battery:

1. Restart your computer. When the logo screen is displayed, immediately press F1 to enter the UEFI BIOS menu.
2. Select **Config → Power**. The **Power** submenu is displayed.
3. Select **Disable Built-in Battery** and press Enter.
4. Select **Yes** in the Setup Confirmation window. The built-in battery is disabled and the computer turns off automatically. Wait three to five minutes to let the computer cool.

Replace a CRU

Follow the replacement procedure to replace a CRU.

Base cover assembly

Prerequisite

Before you start, read Appendix A “Important safety information” on page 59 and print the following instructions.

Note: When your computer is connected to ac power, do not remove the base cover assembly. Otherwise, there might be a risk of short circuits.

Replacement procedure

1. Disable the built-in battery. See “Disable Fast Startup and the built-in battery” on page 43.
2. Turn off the computer and disconnect the computer from ac power and all connected cables.
3. Close the computer display and turn over the computer.
4. Loosen the screws that secure the base cover assembly **1**. Then, pry up the latches and remove the base cover assembly **2**.

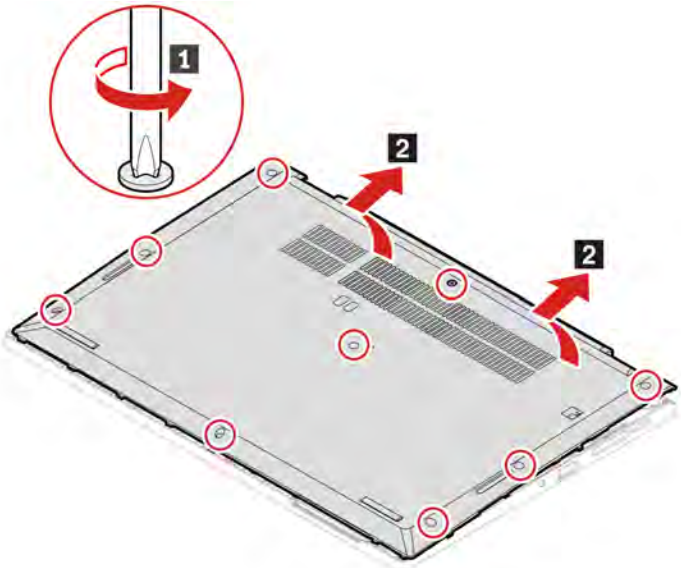

5. Install the new base cover assembly in place 1. Ensure that the latches of the base cover assembly are secured under the base cover assembly 2. Then, tighten the screws to secure the base cover assembly 3.

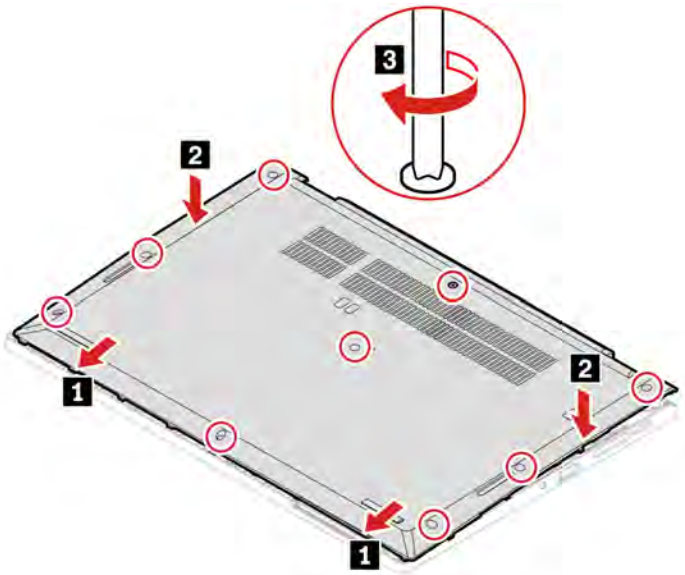

6. Turn over the computer. Connect the ac power adapter and all disconnected cables to the computer.

Troubleshooting

If the computer does not start up after you reinstall the base cover assembly, disconnect the ac power adapter and then reconnect it to the computer.

M.2 solid-state drive and bracket

Prerequisite

Before you start, read Appendix A “Important safety information” on page 59 and print the following instructions.

Attention: If you replace a solid-state drive, you might need to install a new operating system. For details on how to install a new operating system, see “Install Windows 10 and drivers” on page 41.

The M.2 solid-state drive is sensitive. Inappropriate handling might cause damage and permanent loss of data.

When handling the M.2 solid-state drive, observe the following guidelines:

- Replace the M.2 solid-state drive only for upgrade or repair. The M.2 solid-state drive is not designed for frequent changes or replacement.
- Before replacing the M.2 solid-state drive, make a backup copy of all the data that you want to keep.
- Do not apply pressure to the M.2 solid-state drive.
- Do not touch the contact edge or circuit board of the M.2 solid-state drive. Otherwise, the M.2 solid-state drive might get damaged.
- Do not make the M.2 solid-state drive subject to physical shocks or vibration. Put the M.2 solid-state drive on a soft material, such as cloth, to absorb physical shocks.

Replacement procedure for the short M.2 solid-state drive

1. Disable the built-in battery. See “Disable Fast Startup and the built-in battery” on page 43.
2. Turn off the computer and disconnect the computer from ac power and all connected cables.
3. Close the computer display and turn over the computer.
4. Remove the base cover assembly. See “Base cover assembly” on page 44.
5. Remove the M.2 solid-state drive:
   a. Remove the screw that secures the M.2 solid-state drive bracket 1. Then, remove the M.2 solid-state drive with the bracket out of the drive slot 2.

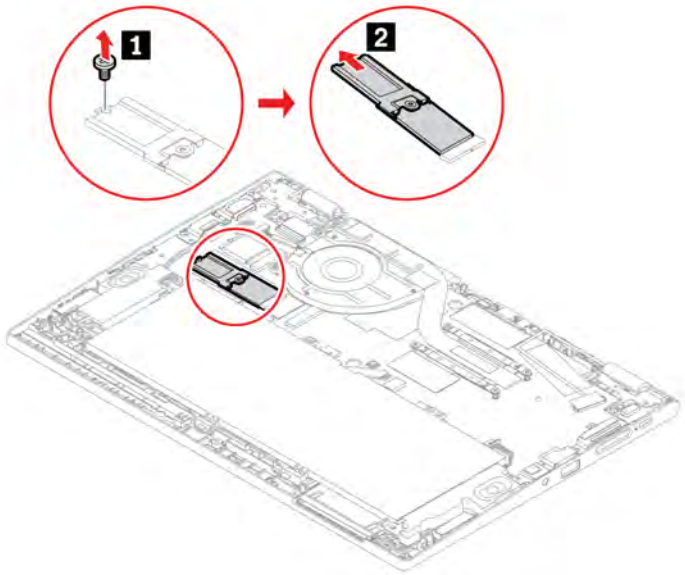

   b. Turn over the M.2 solid-state drive with the bracket and remove the screw 1. Then, remove the M.2 solid-state drive from the bracket 2.

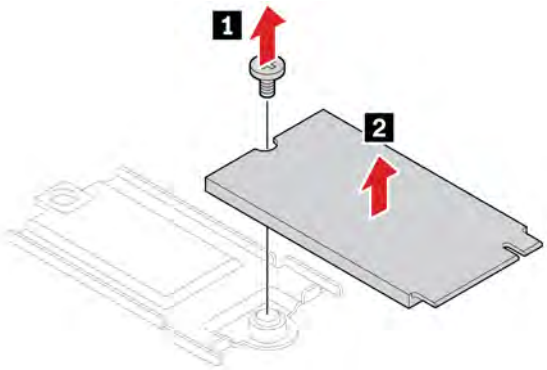

6. Install a new M.2 solid-state drive:
   a. Install the screw to secure the new M.2 solid-state drive on the bracket.

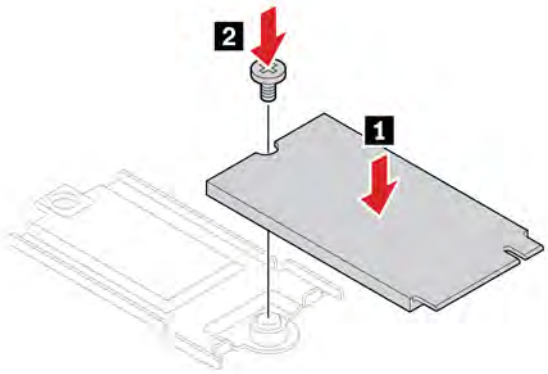

   b. Turn over the new M.2 solid-state drive with the bracket. Insert the new M.2 solid-state drive to the drive slot 1. Then, pivot the bracket downward and install the screw to secure the bracket 2.

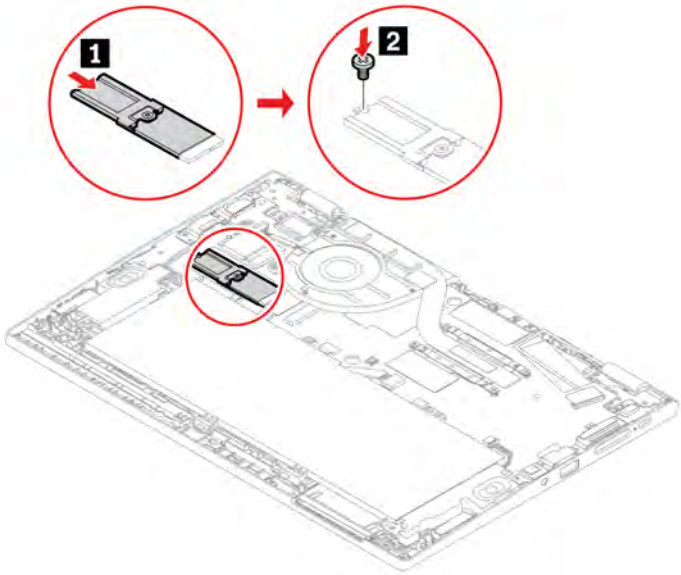

7. Reinstall the base cover assembly.
8. Turn over the computer. Connect the ac power adapter and all disconnected cables to the computer.

Replacement procedure for the long M.2 solid-state drive

1. Disable the built-in battery. See “Disable Fast Startup and the built-in battery” on page 43.
2. Turn off the computer and disconnect the computer from ac power and all connected cables.
3. Close the computer display and turn over the computer.
4. Remove the base cover assembly. See “Base cover assembly” on page 44.
5. Remove the screw that secures the M.2 solid-state drive 1. Then, remove the drive from the drive slot 2.

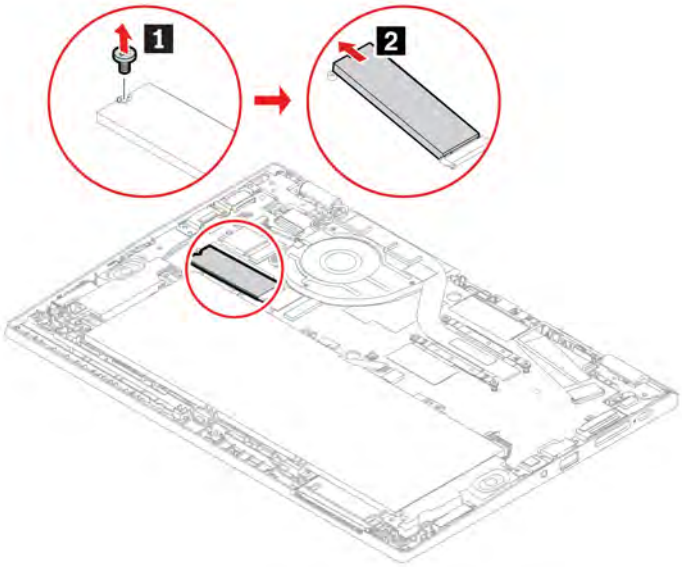

6. Insert the new M.2 solid-state drive to the drive slot 1. Then, pivot the drive downward and install the screw to secure the drive 2.

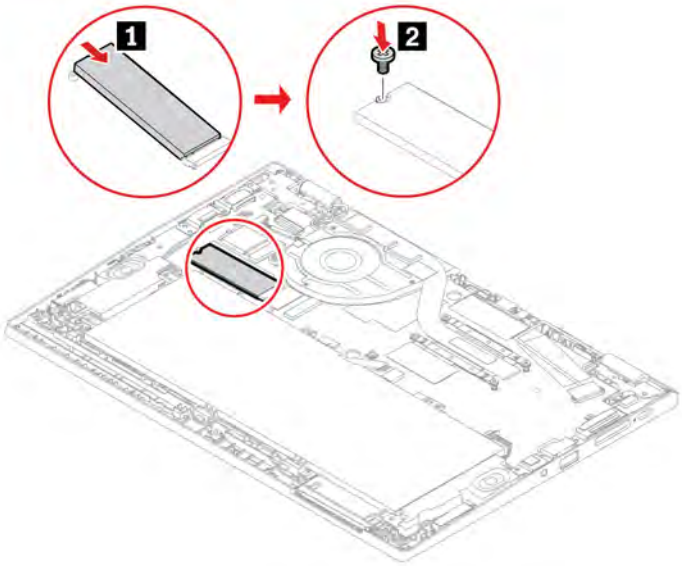

7. Reinstall the base cover assembly.
8. Turn over the computer. Connect the ac power adapter and all disconnected cables to the computer.

Keyboard

Prerequisite

Before you start, read Appendix A “Important safety information” on page 59 and print the following instructions.

Replacement procedure

Note: You might be instructed to slide the keyboard frame forward or backward in some of the following steps. In this case, ensure that you do not press or hold the keys while sliding the keyboard frame. Otherwise, the keyboard frame cannot be moved.

1. Disable the built-in battery. See “Disable Fast Startup and the built-in battery” on page 43.
2. Turn off the computer and disconnect the computer from ac power and all connected cables.
3. Take the tool out of the new keyboard package. Insert the tabs **a** and **b** into the slot between the TrackPoint buttons and the trackpad **1**. Slightly pivot the tool downward **2** to release the left and right TrackPoint buttons. Then, remove the two TrackPoint buttons **3**.

   Note: If your new keyboard is not shipped with the special tool shown in the following procedure, you can use alternative tools to pry up the TrackPoint buttons.

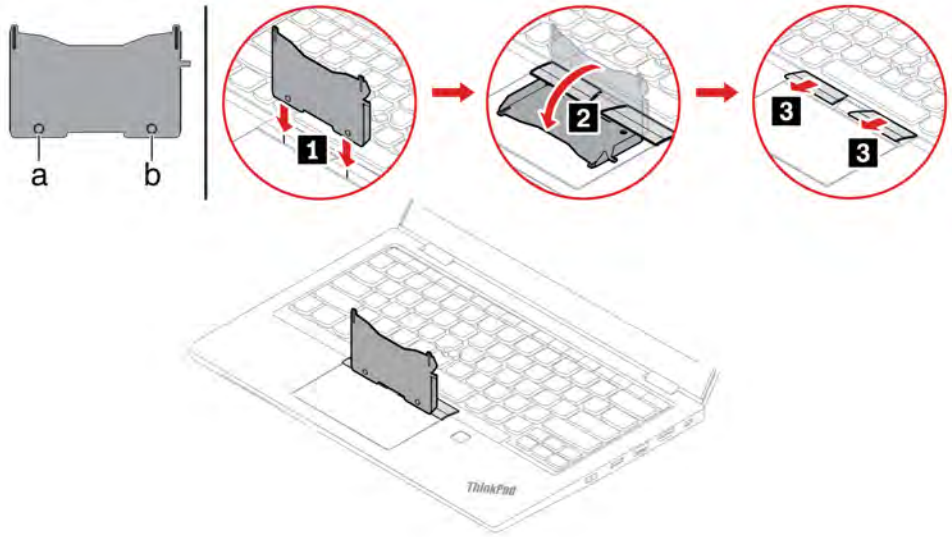

4. Loosen the screws that secure the keyboard.

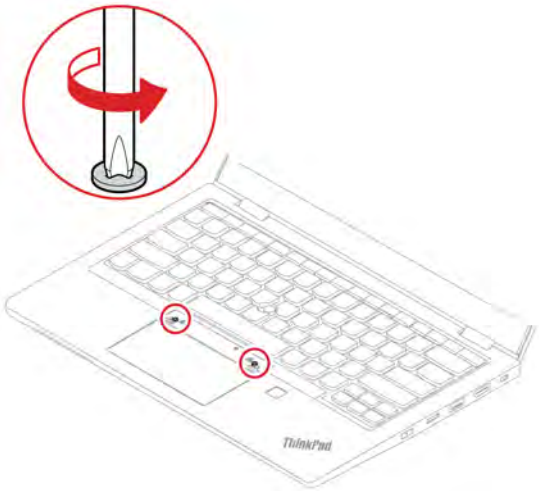

5. Insert the tabs **c** and **d** into the two dents near the two screw heads as shown.

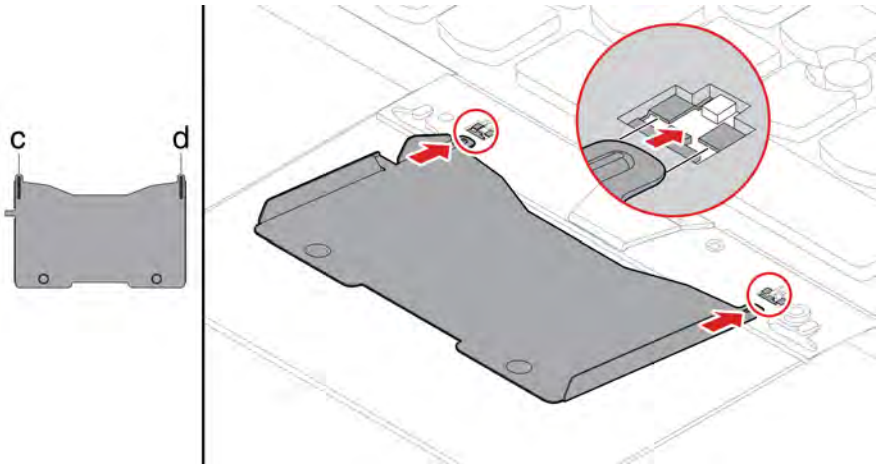

6. Pivot the tool in the direction as shown to release the keyboard **1**. Push the keyboard in the direction as shown by arrows **2** to release the latches from the keyboard bezel.

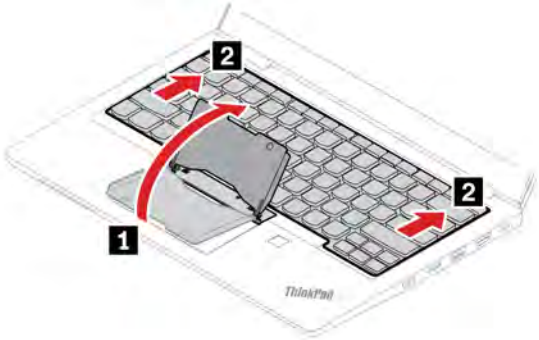

7. Pivot the keyboard slightly upward **1** and then turn over the keyboard **2**.

8. Put the keyboard on the palm rest as shown and detach the connectors. Then, remove the keyboard.

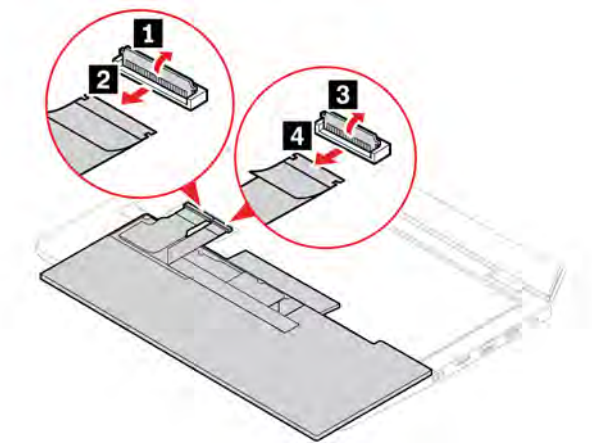

9. Attach the connectors and then turn over the keyboard.

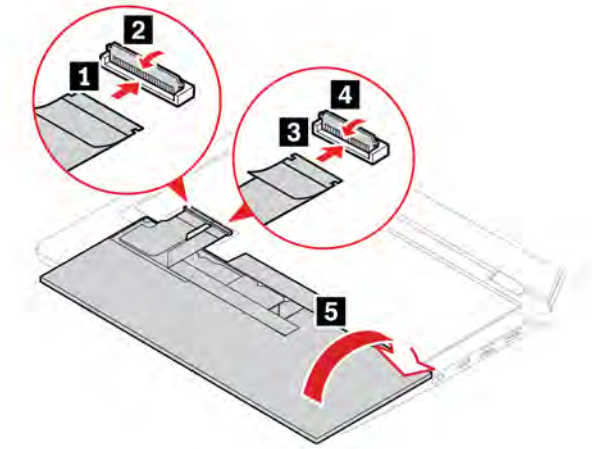

10. Insert the keyboard into the keyboard bezel as shown. Ensure that the top edge of the keyboard (the edge that is close to the display) is under the keyboard bezel.

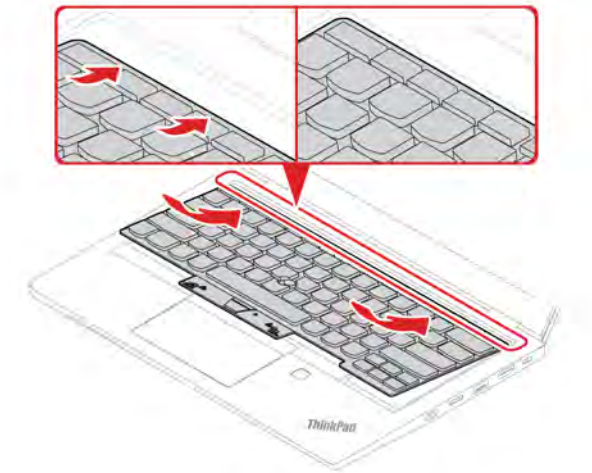

11. Slide the keyboard in the direction as shown. Ensure that the latches are secured under the keyboard frame.

12. Tighten the screws to secure the keyboard.

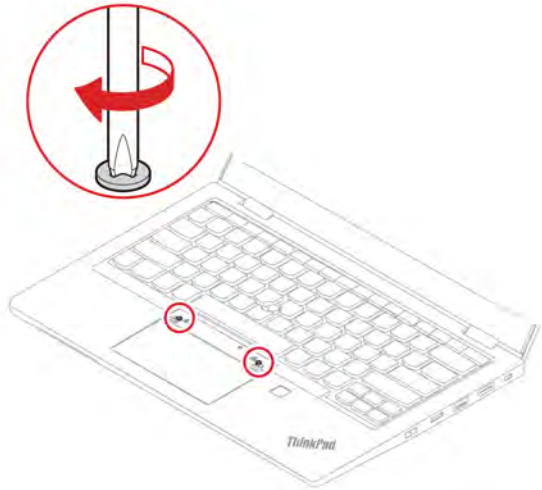

13. Take the new TrackPoint buttons out of the new keyboard package. Install the TrackPoint buttons as shown.

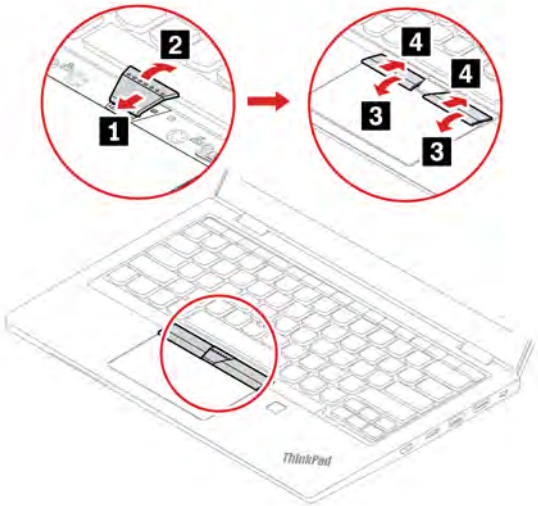

14. Connect the ac power adapter and all disconnected cables to the computer.

Chapter 7. Help and support

Frequently asked questions

How do I access **Control Panel**?	• Open the **Start** menu and click **Windows System** → **Control Panel**. • Use Windows Search.
How do I turn off my computer?	Open the **Start** menu and click ⏻ **Power**. Then, click **Shut down**.
How do I partition my storage drive?	https://support.lenovo.com/solutions/ht503851
What do I do if my computer stops responding.	1. Press and hold the power button until the computer turns off. Then, restart the computer. 2. If step 1 does not work: • For models with an emergency reset hole: Insert a straightened paper clip into the emergency reset hole to cut off power supply temporarily. Then, restart the computer with ac power connected. • For models without an emergency reset hole: – For models with the removable battery, remove the removable battery and disconnect all power sources. Then, reconnect to ac power and restart the computer. – For models with the built-in battery, disconnect all power sources. Press and hold the power button for about seven seconds. Then, reconnect to ac power and restart the computer.
What do I do if I spill liquid on the computer?	1. Carefully unplug the ac power adapter and turn off the computer immediately. The more quickly you stop the current from passing through the computer the more likely you will reduce damage from short circuits. **Attention:** Although you might lose some data or work by turning off the computer immediately, leaving the computer on might make your computer unusable. 2. Do not try to drain out the liquid by turning over the computer. If your computer has keyboard drainage holes on the bottom, the liquid will be drained out through the holes. 3. Wait until you are certain that all the liquid is dry before turning on your computer.
How do I enter the UEFI BIOS menu?	Restart the computer. When the logo screen is displayed, press F1 to enter the UEFI BIOS menu.
How do I disable my trackpad?	1. Open the **Start** menu, and then click **Settings** → **Devices** → **Touchpad**. 2. In the Touchpad section, turn off the **Touchpad** control.
Where can I get the latest device drivers and UEFI BIOS?	• From the Vantage app. See “Install Windows 10 and drivers” on page 41 and “Update UEFI BIOS” on page 40. • Download from Lenovo Support Web site at https://pcsupport.lenovo.com.

© Copyright Lenovo 2020, 2021

Error messages

If you see a message that is not included in the following table, record the error message first, then shut down the computer and call Lenovo for help. See “Lenovo Customer Support Center” on page 57.

Message	Solution
0190: Critical low-battery error	The computer turned off because the battery power is low. Connect the ac power adapter to the computer and charge the batteries.
0191: System Security - Invalid remote change requested	The system configuration change has failed. Confirm the operation and try again.
0199: System Security - Security password retry count exceeded.	This message is displayed when you enter a wrong supervisor password more than three times. Confirm the supervisor password and try again.
0271: Check Date and Time settings.	The date or the time is not set in the computer. Enter the UEFI BIOS menu and set the date and time.
210x/211x: Detection/Read error on HDDx/SSDx	The storage drive is not working. Reinstall the storage drive. If the problem still exists, replace the storage drive.
Error: The non-volatile system UEFI variable storage is nearly full.	**Note:** This error indicates that the operating system or programs cannot create, modify, or delete data in the non-volatile system UEFI variable storage due to insufficient storage space after POST. The non-volatile system UEFI variable storage is used by the UEFI BIOS and by the operating system or programs. This error occurs when the operating system or programs store large amounts of data in the variable storage. All data needed for POST, such as UEFI BIOS setup settings, chipset, or platform configuration data, are stored in a separate UEFI variable storage. Press F1 after the error message is displayed to enter the UEFI BIOS menu. A dialog asks for confirmation to clean up the storage. If you select “Yes”, all data that were created by the operating system or programs will be deleted except global variables defined by the Unified Extensible Firmware Interface Specification. If you select “No”, all data will be kept, but the operating system or programs will not be able to create, modify, or delete data in the storage. If this error happens at a service center, Lenovo authorized service personnel will clean up the non-volatile system UEFI variable storage using the preceding solution.
Fan error. Press ESC to startup with limited performance.	The thermal fan might not work correctly. After the error message is displayed, press ESC within five seconds to start up the computer with limited performance. Otherwise, the computer will shut down immediately. If the problem still exists when you starts up next time, have your computer serviced.

Beep errors

Lenovo SmartBeep technology enables you to decode beep errors with your smartphone when a black screen occurs with beeps from your computer. To decode the beep error with Lenovo SmartBeep technology:

1. Go to https://support.lenovo.com/smartbeep or scan the following QR Code.

2. Download the proper diagnostic app and install it on your smartphone.
3. Run the diagnostic app and place the smartphone near the computer.
4. Press Fn on your computer to emit the beep again. The diagnostic app decodes the beep error and shows possible solutions on the smartphone.

Note: Do not attempt to service a product yourself unless instructed to do so by the Customer Support Center or product documentation. Only use a Lenovo-authorized service provider to repair your product.

Self-help resources

Use the following self-help resources to learn more about the computer and troubleshoot problems.

Resources	How to access?
Use the Vantage app to: • Configure device settings. • Download and install UEFI BIOS, drivers, and firmware updates. • Secure your computer from outside threats. • Diagnose hardware problems. • Check the computer warranty status. • Access *User Guide* and helpful articles.	Type `Vantage` in the search box.
Product documentation: • *Safety and Warranty Guide* • *Setup Guide* • This *User Guide* • *Regulatory Notice*	Go to https://pcsupport.lenovo.com. Then, follow the on-screen instructions to filter out the documentation you want.
Lenovo Support Web site with the latest support information of the following: • Drivers and software • Diagnostic solutions • Product and service warranty • Product and parts details • Knowledge base and frequently asked questions	https://pcsupport.lenovo.com
Windows help information	• Open the Start menu and click **Get Help** or **Tips**. • Use Windows Search or the Cortana® personal assistant. • Microsoft support Web site: https://support.microsoft.com

Call Lenovo

If you have tried to correct the problem yourself and still need help, you can call Lenovo Customer Support Center.

Before you contact Lenovo

Prepare the following before you contact Lenovo:

1. Record the problem symptoms and details:
   - What is the problem? Is it continuous or intermittent?
   - Any error message or error code?
   - What operating system are you using? Which version?
   - Which software applications were running at the time of the problem?

- Can the problem be reproduced? If so, how?

2. Record the system information:
   - Product name
   - Machine type and serial number

     The following illustration shows where to find the machine type and serial number of your computer.

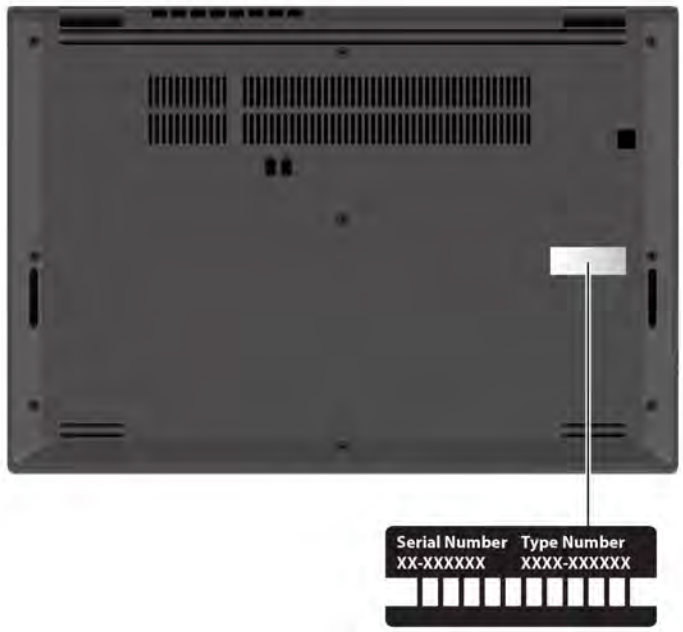

Lenovo Customer Support Center

During the warranty period, you can call Lenovo Customer Support Center for help.

Telephone numbers

For a list of the Lenovo Support phone numbers for your country or region, go to https://pcsupport.lenovo.com/supportphonelist for the latest phone numbers.

Note: Phone numbers are subject to change without notice. If the number for your country or region is not provided, contact your Lenovo reseller or Lenovo marketing representative.

Services available during the warranty period

- Problem determination - Trained personnel are available to assist you with determining if you have a hardware problem and deciding what action is necessary to fix the problem.
- Lenovo hardware repair - If the problem is determined to be caused by Lenovo hardware under warranty, trained service personnel are available to provide the applicable level of service.
- Engineering change management - Occasionally, there might be changes that are required after a product has been sold. Lenovo or your reseller, if authorized by Lenovo, will make selected Engineering Changes (ECs) that apply to your hardware available.

Services not covered

- Replacement or use of parts not manufactured for or by Lenovo or nonwarranted parts
- Identification of software problem sources
- Configuration of UEFI BIOS as part of an installation or upgrade

- Changes, modifications, or upgrades to device drivers
- Installation and maintenance of network operating systems (NOS)
- Installation and maintenance of programs

For the terms and conditions of the Lenovo Limited Warranty that apply to your Lenovo hardware product, go to:

- https://www.lenovo.com/warranty/llw_02
- https://pcsupport.lenovo.com/warrantylookup

Purchase additional services

During and after the warranty period, you can purchase additional services from Lenovo at https://pcsupport.lenovo.com/warrantyupgrade.

Service availability and service name might vary by country or region.

Appendix A. Important safety information

Safety notices

This information can help you safely use your computer. Follow and retain all information included with your computer. The information in this document does not alter the terms of your purchase agreement or the Limited Warranty. For more information, see *Safety and Warranty Guide* that comes with your computer.

Customer safety is important. Our products are developed to be safe and effective. However, personal computers are electronic devices. Power cords, power adapters, and other features can create potential safety risks that can result in physical injury or property damage, especially if misused. To reduce these risks, follow the instructions included with your product, observe all warnings on the product and in the operating instructions, and review the information included in this document carefully. By carefully following the information contained in this document and provided with your product, you can help protect yourself from hazards and create a safer computer work environment.

Note: This information includes references to power adapters and batteries. In addition, some products (such as speakers and monitors) ship with external power adapters. If you have such a product, this information applies to your product. In addition, computer products contain a coin-sized internal battery that provides power to the system clock even when the computer is unplugged, so the battery safety information applies to all computer products.

Important information about using your computer

Ensure that you follow the important tips given here to get the most use and enjoyment out of your computer. Failure to do so might lead to discomfort or injury, or cause the computer to fail.

Protect yourself from the heat that your computer generates.

When your computer is turned on or the battery is charging, the base, the palm rest, and some other parts may become hot. The temperature they reach depends on the amount of system activity and the level of charge in the battery.

Extended contact with your body, even through clothing, could cause discomfort or even a skin burn.

- Avoid keeping your hands, your lap, or any other part of your body in contact with a hot section of the computer for any extended time.
- Periodically take your hands away from the keyboard by lifting your hands from the palm rest.

© Copyright Lenovo 2020, 2021

Protect yourself from the heat generated by the ac power adapter.

When the ac power adapter is connected to an electrical outlet and your computer, it generates heat.

Extended contact with your body, even through clothing, may cause a skin burn.

- Do not place the ac power adapter in contact with any part of your body while it is in use.
- Never use it to warm your body.
- Do not wrap the cords around the ac power adapter while in use.

Prevent your computer from getting wet.

To avoid spills and the danger of electrical shock, keep liquids away from your computer.

Protect the cables from being damaged.

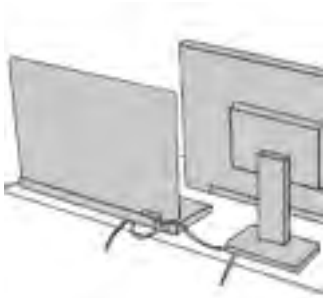

Applying strong force to cables may damage or break them.

Route communication lines, or the cables of an ac power adapter, a mouse, a keyboard, a printer, or any other electronic device, so that they cannot be walked on, tripped over, pinched by your computer or other objects, or in any way subject to treatment that could interfere with the operation of your computer.

Protect your computer and data when moving it.

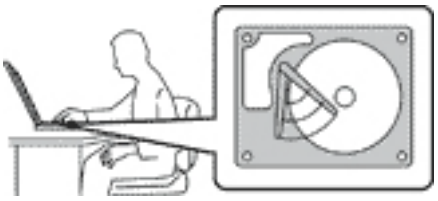

Before moving a computer equipped with a storage drive, do one of the following:

- Turn it off.
- Put it in sleep mode.
- Put it in hibernation mode.

This helps to prevent damage to the computer, and possible loss of data.

Handle your computer gently.

Do not drop, bump, scratch, twist, hit, vibrate, push, or place heavy objects on your computer, display, or external devices.

Carry your computer carefully.

- Use a quality carrying case that provides adequate cushioning and protection.
- Do not pack your computer in a tightly packed suitcase or bag.
- Before putting your computer in a carrying case, make sure that it is off, in sleep mode, or in hibernation mode. Do not put a computer in a carrying case while it is turned on.

Conditions that require immediate action

Products can become damaged due to misuse or neglect. Some product damage is serious enough that the product should not be used again until it has been inspected and, if necessary, repaired by an authorized servicer.

As with any electronic device, pay close attention to the product when it is turned on.

On very rare occasions, you might notice an odor or see a puff of smoke or sparks vent from your product. You might also hear sounds like popping, cracking, or hissing. These might merely mean that an internal electronic component has failed in a safe and controlled manner. Or, they might indicate a potential safety issue. Do not take risks or attempt to diagnose the situation yourself. Contact the Customer Support Center for further guidance. For a list of Service and Support phone numbers, see the following Web site:

https://pcsupport.lenovo.com/supportphonelist

Frequently inspect your computer and its components for damage, wear, or signs of danger. If you have any question about the condition of a component, do not use the product. Contact the Customer Support Center or the product manufacturer for instructions on how to inspect the product and have it repaired, if necessary.

In the unlikely event that you notice any of the following conditions, or if you have any safety concerns with your product, stop using the product and unplug it from the power source and telecommunication lines until you can speak to the Customer Support Center for further guidance.

- Power cords, plugs, power adapters, extension cords, surge protectors, or power supplies that are cracked, broken, or damaged.
- Signs of overheating, smoke, sparks, or fire.
- Damage to a battery (such as cracks, dents, or creases), discharge from a battery, or a buildup of foreign substances on the battery.
- A cracking, hissing, or popping sound, or strong odor that comes from the product.
- Signs that liquid has been spilled or an object has fallen onto the computer product, the power cord, or power adapter.
- The computer product, power cord, or power adapter has been exposed to water.
- The product has been dropped or damaged in any way.
- The product does not operate normally when you follow the operating instructions.

Note: If you notice these conditions with a product (such as an extension cord) that is not manufactured for or by Lenovo, stop using that product until you can contact the product manufacturer for further instructions, or until you get a suitable replacement.

Service and upgrades

Do not attempt to service a product yourself unless instructed to do so by the Customer Support Center or your documentation. Only use a Service Provider who is approved to repair your particular product.

Note: Some computer parts can be upgraded or replaced by the customer. Upgrades typically are referred to as options. Replacement parts approved for customer installation are referred to as Customer Replaceable Units, or CRUs. Lenovo provides documentation with instructions when it is appropriate for customers to install options or replace CRUs. You must closely follow all instructions when installing or replacing parts. The Off state of a power indicator does not necessarily mean that voltage levels inside a product are zero. Before you remove the covers from a product equipped with a power cord, always ensure that the power is turned off and that the product is unplugged from any power source. If you have any questions or concerns, contact the Customer Support Center.

Although there are no moving parts in your computer after the power cord has been disconnected, the following warnings are required for your safety.

Keep fingers and other parts of your body away from hazardous, moving parts. If you suffer an injury, seek medical care immediately.

Do not touch hot surface of hot components inside the computer. During operation, some components become hot enough to burn the skin. Before you open the computer cover, turn off the computer, disconnect power, and wait approximately 10 minutes for the components to cool.

After replacing a CRU, reinstall all protective covers, including the computer cover, before connecting power and operating the computer. This action is important to help prevent unexpected electrical shock and help ensure the containment of an unexpected fire that could happen under extremely rare conditions.

When replacing CRUs, be cautious of sharp edges or corners that might cause injury. If you suffer an injury, seek medical care immediately.

Power cords and power adapters

DANGER

Use only the power cords and power adapters supplied by the product manufacturer.

The power cords shall be safety approved. For Germany, it shall be H03VV-F, 3G, 0.75 mm^2, or better. For other countries, the suitable types shall be used accordingly.

Never wrap a power cord around a power adapter or other object. Doing so can stress the cord in ways that can cause the cord to fray, crack, or crimp. This can present a safety hazard.

Always route power cords so that they will not be walked on, tripped over, or pinched by objects.

Protect power cords and power adapters from liquids. For instance, do not leave your power cord or power adapter near sinks, tubs, toilets, or on floors that are cleaned with liquid cleansers. Liquids can cause a short circuit, particularly if the power cord or power adapter has been stressed by misuse. Liquids also can cause gradual corrosion of power cord terminals and/or the connector terminals on a power adapter, which can eventually result in overheating.

Ensure that all power cord connectors are securely and completely plugged into receptacles.

Do not use any power adapter that shows corrosion at the ac input pins or shows signs of overheating (such as deformed plastic) at the ac input pins or anywhere on the power adapter.

Do not use any power cords where the electrical contacts on either end show signs of corrosion or overheating or where the power cord appears to have been damaged in any way.

To prevent possible overheating, do not cover the power adapter with clothing or other objects when the power adapter is plugged into an electrical outlet.

Extension cords and related devices

Ensure that extension cords, surge protectors, uninterruptible power supplies, and power strips that you use are rated to handle the electrical requirements of the product. Never overload these devices. If power strips are used, the load should not exceed the power strip input rating. Consult an electrician for more information if you have questions about power loads, power requirements, and input ratings.

Plugs and outlets

DANGER

If a receptacle (power outlet) that you intend to use with your computer equipment appears to be damaged or corroded, do not use the outlet until it is replaced by a qualified electrician.

Do not bend or modify the plug. If the plug is damaged, contact the manufacturer to obtain a replacement.

Do not share an electrical outlet with other home or commercial appliances that draw large amounts of electricity; otherwise, unstable voltage might damage your computer, data, or attached devices.

Some products are equipped with a three-pronged plug. This plug fits only into a grounded electrical outlet. This is a safety feature. Do not defeat this safety feature by trying to insert it into a non-grounded outlet. If you cannot insert the plug into the outlet, contact an electrician for an approved outlet adapter or to replace the outlet with one that enables this safety feature. Never overload an electrical outlet. The overall system load should not exceed 80 percent of the branch circuit rating. Consult an electrician for more information if you have questions about power loads and branch circuit ratings.

Be sure that the power outlet you are using is properly wired, easily accessible, and located close to the equipment. Do not fully extend power cords in a way that will stress the cords.

Be sure that the power outlet provides the correct voltage and current for the product you are installing.

Carefully connect and disconnect the equipment from the electrical outlet.

Power supply statement

Never remove the cover on a power supply or any part that has the following label attached.

Hazardous voltage, current, and energy levels are present inside any component that has this label attached. There are no serviceable parts inside these components. If you suspect a problem with one of these parts, contact a service technician.

External devices

CAUTION:
Do not connect or disconnect any external device cables other than Universal Serial Bus (USB) and 1394 cables while the computer power is on; otherwise, you might damage your computer. To avoid possible damage to attached devices, wait at least five seconds after the computer is shut down to disconnect external devices.

General battery notice

DANGER

Batteries supplied by Lenovo for use with your product have been tested for compatibility and should only be replaced with approved parts. A battery other than the one specified by Lenovo, or a disassembled or modified battery is not covered by the warranty.

Battery abuse or mishandling can cause overheat, liquid leakage, or an explosion. To avoid possible injury:

- **Do not open, dissemble, or service any battery.**
- **Do not crush or puncture the battery.**
- **Do not short-circuit the battery, or expose it to water or other liquids.**
- **Keep the battery away from children.**
- **Keep the battery away from fire.**

Stop using the battery if it is damaged, or if you notice any discharge or the buildup of foreign materials on the battery leads.

Store the rechargeable batteries or products containing the rechargeable batteries at room temperature, charged to approximately 30 to 50% of capacity. We recommend that the batteries be charged about once per year to prevent overdischarge.

Do not put the battery in trash that is disposed of in landfills. When disposing of the battery, comply with local ordinances or regulations.

Notice for built-in rechargeable battery

DANGER

Do not attempt to remove or replace the built-in rechargeable battery. Replacement of the battery must be done by a Lenovo-authorized repair facility or technician.

Only recharge the battery strictly according to instructions included in the product documentation.

The Lenovo-authorized repair facilities or technicians recycle Lenovo batteries according to local laws and regulations.

Lithium coin-cell battery notice

DANGER

Danger of explosion if battery is incorrectly replaced.

If the coin-cell battery is not a CRU, do not attempt to replace the coin-cell battery. Replacement of the battery must be done by a Lenovo-authorized repair facility or technician.

The Lenovo-authorized repair facilities or technicians recycle Lenovo batteries according to local laws and regulations.

When replacing the lithium coin-cell battery, use only the same type or equivalent type that is recommended by the manufacturer. The battery contains lithium and can explode if not properly used, handled, or disposed of. Swallowing the lithium coin-cell battery will cause chocking or severe internal burns in just two hours and might even result in death.

Keep batteries away from children. If the lithium coin-cell battery is swallowed or placed inside any part of the body, seek medical care immediately.

Do not:

- Throw or immerse into water
- Heat to more than 100 °C (212°F)
- Repair or disassemble
- Leave in an extremely low air pressure environment
- Leave in an extremely high-temperature environment
- Crush, puncture, cut, or incinerate

Dispose of the battery as required by local ordinances or regulations.

The following statement applies to users in the state of California, U.S.A.

California Perchlorate Information:

Products containing manganese dioxide lithium coin-cell batteries may contain perchlorate.

Perchlorate Material - special handling may apply, see https://www.dtsc.ca.gov/hazardouswaste/perchlorate/.

Heat and product ventilation

DANGER

Computers, ac power adapters, and many accessories can generate heat when turned on and when batteries are charging. Notebook computers can generate a significant amount of heat due to their compact size. Always follow these basic precautions:

- **When your computer is turned on or the battery is charging, the base, the palm rest, and some other parts may become hot. Avoid keeping your hands, your lap, or any other part of your body in contact with a hot section of the computer for any extended length of time. When you use the keyboard, avoid keeping your palms on the palm rest for a prolonged period of time. Your computer generates some heat during normal operation. The amount of heat depends on the amount of system activity and the battery charge level. Extended contact with your body, even through clothing, could cause discomfort or even a skin burn. Periodically take breaks from using the keyboard by lifting your hands from the palm rest; and be careful not to use the keyboard for any extended length of time.**
- **Do not operate your computer or charge the battery near flammable materials or in explosive environments.**
- **Ventilation slots, fans and/or heat sinks are provided with the product for safety, comfort, and reliable operation. These features might inadvertently become blocked by placing the product on a bed, sofa, carpet, or other flexible surface. Never block, cover, or disable these features.**
- **When the ac power adapter is connected to an electrical outlet and your computer, it generates heat. Do not place the adapter in contact with any part of your body while using it. Never use the ac power adapter to warm your body. Extended contact with your body, even through clothing, may cause a skin burn.**

For your safety, always follow these basic precautions with your computer:

- **Keep the cover closed whenever the computer is plugged in.**
- **Regularly inspect the outside of the computer for dust accumulation.**
- **Remove dust from vents and any perforations in the bezel. More frequent cleanings might be required for computers in dusty or high-traffic areas.**
- **Do not restrict or block any ventilation openings.**
- **Do not operate your computer inside furniture, as this might increase the risk of overheating.**
- **Airflow temperatures into the computer should not exceed 35°C (95°F).**

Electrical current safety information

DANGER

Electric current from power, telephone, and communication cables is hazardous.

To avoid a shock hazard:

- **Do not use your computer during a lightning storm.**
- **Do not connect or disconnect any cables or perform installation, maintenance, or reconfiguration of this product during an electrical storm.**
- **Connect all power cords to a properly wired and grounded electrical outlet.**
- **Connect properly wired outlets to any equipment that will be attached to this product.**
- **Whenever possible, use one hand only to connect or disconnect signal cables.**
- **Never turn on any equipment when there is evidence of fire, water, or structural damage.**
- **Disconnect the attached power cords, battery, and all the cables before you open the device covers, unless instructed otherwise in the installation and configuration procedures.**
- **Do not use your computer until all internal parts enclosures are fastened into place. Never use the computer when internal parts and circuits are exposed.**

DANGER

Connect and disconnect cables as described in the following procedures when installing, moving, or opening covers on this product or attached devices.

To connect:

1. **Turn everything OFF.**
2. **First, attach all cables to devices.**
3. **Attach signal cables to connectors.**
4. **Attach power cords to outlets.**
5. **Turn devices ON.**

To disconnect:

1. **Turn everything OFF.**
2. **First, remove power cords from outlets.**
3. **Remove signal cables from connectors.**
4. **Remove all cables from devices.**

The power cord must be disconnected from the wall outlet or receptacle before installing all other electrical cables connected to the computer.

The power cord may be reconnected to the wall outlet or receptacle only after all other electrical cables have been connected to the computer.

DANGER

During electrical storms, do not perform any replacement and do not connect the telephone cable to or disconnect it from the telephone outlet on the wall.

Liquid crystal display (LCD) notice

CAUTION:
The liquid crystal display (LCD) is made of glass, and rough handling or dropping the computer can cause the LCD to break. If the LCD breaks and the internal fluid gets into your eyes or on your hands, immediately wash the affected areas with water for at least 15 minutes; if any symptoms are present after washing, get medical care.

Note: For products with mercury-containing fluorescent lamps (for example, non-LED), the fluorescent lamp in the liquid crystal display (LCD) contains mercury; dispose of according to local, state, or federal laws.

Use earphones, headphones, or a headset

Excessive sound pressure from earphones and headphones can cause hearing loss. Adjustment of the equalizer to maximum increases the earphone and headphone output voltage and the sound pressure level. Therefore, to protect your hearing, adjust the equalizer to an appropriate level.

Excessive use of headphones or earphones for a long period of time at high volume can be dangerous if the output of the headphone or earphone connectors do not comply with specifications of EN 50332-2. The headphone output connector of your computer complies with EN 50332-2 Sub clause 7. This specification limits the computer's maximum wide band true RMS output voltage to 150 mV. To help protect against hearing loss, ensure that the headphones or earphones you use also comply with EN 50332-2 (Clause 7 limits) for a wide band characteristic voltage of 75 mV. Using headphones that do not comply with EN 50332-2 can be dangerous due to excessive sound pressure levels.

If your Lenovo computer came with headphones or earphones in the packaging, as a set, the combination of the headphones or earphones and the computer already complies with the specifications of EN 50332-1. If different headphones or earphones are used, ensure that they comply with EN 50332-1 (Clause 6.5 Limitation Values). Using headphones that do not comply with EN 50332-1 can be dangerous due to excessive sound pressure levels.

Choking hazard notice

CHOKING HAZARD – Product contains small parts.

Keep away from children under three years.

Plastic bag notice

DANGER

Plastic bags can be dangerous. Keep plastic bags away from babies and children to avoid danger of suffocation.

Glass parts notice

CAUTION:
Some parts of your product may be made of glass. This glass could break if the product is dropped on a hard surface or receives a substantial impact. If glass breaks, do not touch or attempt to remove it. Stop using your product until the glass is replaced by trained service personnel.

Static electricity prevention

Static electricity, although harmless to you, can seriously damage computer components and options. Improper handling of static-sensitive parts can damage the part. When you unpack an option or CRU, do not open the static-protective package containing the part until the instructions direct you to install it.

When you handle options or CRUs, or perform any work inside the computer, take the following precautions to avoid static-electricity damage:

- Limit your movement. Movement can cause static electricity to build up around you.
- Always handle components carefully. Handle adapters, memory modules, and other circuit boards by the edges. Never touch exposed circuitry.
- Prevent others from touching components.
- When you install a static-sensitive option or CRU, touch the static-protective packaging containing the part to a metal expansion-slot cover or other unpainted metal surface on the computer for at least two seconds. This reduces static electricity in the package and your body.
- When possible, remove the static-sensitive part from the static-protective packaging and install the part without setting it down. When this is not possible, place the static-protective packaging on a smooth, level surface and place the part on it.
- Do not place the part on the computer cover or other metal surface.

Operating environment

Maximum altitude (without pressurization)

3048 m (10 000 ft)

Temperature

- Operating: 5°C to 35°C (41°F to 95°F)
- Storage and transportation in original shipping packaging: -20°C to 60°C (-4°F to 140°F)
- Storage without packaging: 5°C to 43°C (41°F to 109°F)

Note: When you charge the battery, its temperature must be no lower than 10°C (50°F).

Relative humidity

- Operating: 8% to 95% at wet-bulb temperature 23°C (73°F)
- Storage and transportation: 5% to 95% at wet-bulb temperature 27°C (81°F)

Cleaning and maintenance

With appropriate care and maintenance, your computer will serve you reliably. The following topics offer information to help you keep your computer working with best performance.

Basic maintenance tips

Here are some basic points about keeping your computer functioning properly:

- If possible, place your computer in a well-ventilated and dry area without direct exposure to sunshine.
- Store packing materials safely out of the reach of children to prevent the risk of suffocation from plastic bags.
- Keep your computer away from magnets, activated cellular phones, electrical appliances, or speakers (more than 13 cm or 5 inches).
- Avoid subjecting your computer to extreme temperatures (below 5°C/41°F or above 35°C/95°F).
- Avoid placing any objects (including paper) between the display and the keyboard or the palm rest.
- Computer display might be designed to be opened and used at a certain angle. Do not open the display with force. Otherwise, the computer hinge might get damaged.
- Do not turn your computer over when the ac power adapter is plugged in, otherwise, it could break the adapter plug.
- Before moving your computer, be sure to remove any media, turn off attached devices, and disconnect cords and cables.
- When picking up your open computer, hold it by the bottom. Do not pick up or hold your computer by the display.
- Only an authorized Lenovo repair technician should disassemble and repair your computer.
- Do not modify or tape the latches to keep the display open or closed.
- Avoid directly exposing your computer and peripherals to the air from an appliance that can produce negative ions. Wherever possible, ground your computer to facilitate safe electrostatic discharge.

Clean your computer

It is a good practice to clean your computer periodically to protect the surfaces and ensure trouble-free operation.

Clean the computer cover: Wipe it with a lint-free cloth dampened in mild soap and water. Avoid applying liquids directly to the cover.

Clean the keyboard: Wipe the keys one by one with a lint-free cloth dampened in mild soap and water. If you wipe several keys at a time, the cloth might hook onto an adjacent key and possibly damage it. Avoid spraying cleaner directly onto the keyboard. To remove any crumbs or dust from beneath the keys, you can use a camera blower with a brush or use cool air from a hair dryer.

Clean the computer screen: Scratches, oil, dust, chemicals, and ultraviolet light can affect the performance of your computer screen. Use a dry, soft lint-free cloth to wipe the screen gently. If you see a scratchlike mark on your screen, it might be a stain. Wipe or dust the stain gently with a soft, dry cloth. If the stain remains, moisten a soft, lint-free cloth with water or eyeglass cleaner, but do not apply liquids directly to your computer screen. Ensure that the computer screen is dry before closing it.

Appendix B. Accessibility and ergonomic information

This chapter provides information about accessibility and ergonomics.

Accessibility information

Lenovo is committed to providing users who have hearing, vision, and mobility limitations with greater access to information and technology. This section provides information about the ways these users can get the most out of their computer experience. You also can get the most up-to-date accessibility information from the following Web site:

https://www.lenovo.com/accessibility

Keyboard shortcuts

The following list contains keyboard shortcuts that can help make your computer easier to use.

Note: Depending on your keyboard, some of the following keyboard shortcuts might not be available.

- **Windows logo key + U**: Open Ease of Access Center
- **Right Shift for eight seconds**: Turn on or turn off Filter Keys
- **Shift five times**: Turn on or turn off Sticky Keys
- **Num Lock for five seconds**: Turn on or turn off Toggle Keys
- **Left Alt+Left Shift+Num Lock**: Turn on or turn off Mouse Keys
- **Left Alt+Left Shift+PrtScn (or PrtSc)**: Turn on or turn off High Contrast

For more information, go to https://windows.microsoft.com, and then search using any of the following keywords: `keyboard shortcuts`, `key combinations`, `shortcut keys`.

Ease of Access Center

Ease of Access Center on the Windows operating system enables you to configure your computers to suit their physical and cognitive needs.

To access Ease of Access Center:

1. Go to **Control Panel** and view by Category.
2. Click **Ease of Access → Ease of Access Center**.
3. Choose the appropriate tool by following the on-screen instructions.

Ease of Access Center mainly includes the following tools:

- Magnifier

  Magnifier is a useful utility that enlarges the entire screen or part of the screen so that you can see the items better.
- Narrator

  Narrator is a screen reader that reads what is displayed on the screen aloud and describes events such as error messages.
- On-Screen Keyboard

  If you prefer to type or enter data into your computer using a mouse, joystick, or other pointing device instead of a physical keyboard, you can use On-Screen Keyboard. On-Screen Keyboard displays a visual

© Copyright Lenovo 2020, 2021

keyboard with all the standard keys. You can select keys using the mouse or another pointing device, or you can tap to select the keys if your computer supports multi-touch screen.

- High Contrast

  High Contrast is a feature that heightens the color contrast of some text and images on your screen. As a result, those items are more distinct and easier to identify.

- Personalized keyboard

  Adjust keyboard settings to make your keyboard easier to use. For example, you can use your keyboard to control the pointer and make the keyboard easier to type certain key combinations.

- Personalized mouse

  Adjust mouse settings to make your mouse easier to use. For example, you can change the pointer appearance and make your mouse easier to manage windows.

Speech Recognition

Speech Recognition enables you to control your computer by voice.

You can use verbal instructions to control the keyboard and mouse. With verbal instructions, you can start programs, open menus, click objects on the screen, dictate text into documents, and write and send e-mails.

To use Speech Recognition:

1. Go to **Control Panel** and view by Category.
2. Click **Ease of Access → Speech Recognition**.
3. Follow the on-screen instructions.

Screen-reader technologies

Screen-reader technologies are primarily focused on software program interfaces, help systems, and various online documents. For additional information about screen readers, see the following:

- Use PDFs with screen readers:

  https://www.adobe.com/accessibility.html?promoid=DJGVE

- Use the JAWS screen reader:

  https://www.freedomscientific.com/Products/Blindness/JAWS

- Use the NVDA screen reader:

  https://www.nvaccess.org/

Screen resolution

You can make the text and images on your screen easier to read by adjusting the screen resolution of your computer.

To adjust the screen resolution:

1. Right-click a blank area on the desktop and then click **Display settings → Display**.
2. Follow the on-screen instructions.

Note: Setting a resolution too low might prevent some items from fitting on the screen.

Customizable item size

You can make the items on your screen easier to read by changing the item size.

- To change the item size temporarily, use the Magnifier tool in Ease of Access Center.
- To change the item size permanently:

– Change the size of all the items on your screen.
  1. Right-click a blank area on the desktop and then click **Display settings → Display**.
  2. Change the item size by following the on-screen instructions. For some applications, your configuration might not take effect until you sign out and then sign in again.
– Change the size of the items on a Web page.

  Press and hold Ctrl, and then press the plus-sign key (+) to enlarge or the minus-sign key (–) to reduce the text size.
– Change the size of the items on the desktop or a window.

  Note: This function might not work on some windows.

  If your mouse has a wheel, press and hold Ctrl, and then scroll the wheel to change the item size.

Industry-standard connectors

Your computer provides industry-standard connectors that enable you to connect assistive devices.

Documentation in accessible formats

Lenovo provides electronic documentation in accessible formats, such as properly tagged PDF files or HyperText Markup Language (HTML) files. Lenovo electronic documentation is developed to ensure that visually impaired users can read the documentation through a screen reader. Each image in the documentation also includes adequate alternative text so that visually impaired users can understand the image when they use a screen reader.

Ergonomic information

Good ergonomic practice is important to get the most from your personal computer and to avoid discomfort. Arrange your workplace and the equipment you use to suit your individual needs and the kind of work that you perform. In addition, use healthy work habits to maximize your performance and comfort when using your computer.

Working in the virtual office might mean adapting to frequent changes in your environment. Adapting to the surrounding light sources, active seating, and the placement of your computer hardware, can help you improve your performance and achieve greater comfort.

This example shows someone in a conventional setting. Even when not in such a setting, you can follow many of these tips. Develop good habits, and they will serve you well.

General posture: Make minor modifications in your working posture to deter the onset of discomfort caused by long periods of working in the same position. Frequent short breaks from your work also help to prevent minor discomfort associated with your working posture.

Display: Position the display to maintain a comfortable viewing distance of 510 mm to 760 mm (20 inches to 30 inches). Avoid glare or reflections on the display from overhead lighting or outside sources of light. Keep the display screen clean and set the brightness to levels that enable you to see the screen clearly. Press the brightness control keys to adjust display brightness.

Head position: Keep your head and neck in a comfortable and neutral (vertical, or upright) position.

Chair: Use a chair that gives you good back support and seat height adjustment. Use chair adjustments to best suit your comfort posture.

Arm and hand position: If available, use chair arm rests or an area on your working surface to provide weight support for your arms. Keep your forearms, wrists, and hands in a relaxed and neutral (horizontal) position. Type with a soft touch without pounding the keys.

Leg position: Keep your thighs parallel to the floor and your feet flat on the floor or on a footrest.

What if you are traveling?

It might not be possible to observe the best ergonomic practices when you are using your computer while on the move or in a casual setting. Regardless of the setting, try to observe as many of the tips as possible. Sitting properly and using adequate lighting, for example, helps you maintain desirable levels of comfort and performance. If your work area is not in an office setting, ensure to take special note of employing active sitting and taking work breaks. Many product solutions are available to help you modify and expand your computer to best suit your needs. You can find some of these options at https://www.lenovo.com/accessories. Explore your options for docking solutions and external products that provide the adjustability and features that you want.

Questions about vision?

The visual display screens of notebook computers are designed to meet the highest standards. These visual display screens provide you with clear, crisp images and large, bright displays that are easy to see, yet easy on the eyes. Any concentrated and sustained visual activity can be tiring. If you have questions on eye fatigue or visual discomfort, consult a vision-care specialist for advice.

Appendix C. Supplemental information about the Linux operating system

In limited countries or regions, Lenovo offers customers an option to order computers with the preinstalled Linux® operating system.

If the Linux operating system is available on your computer, read the following information before you use the computer. Ignore any information related to Windows-based programs, utilities, and Lenovo preinstalled applications in this documentation.

Access the Lenovo Limited Warranty

This product is covered by the terms of the Lenovo Limited Warranty (LLW), version L505-0010-02 08/2011. You can view the LLW in a number of languages from the following Web site. Read the Lenovo Limited Warranty at:

https://www.lenovo.com/warranty/llw_02

The LLW also is preinstalled on the computer. To access the LLW:

- for Ubuntu®, go to `/usr/share/doc/lenovo-doc`
- for Fedora®, go to `/opt/Lenovo`

If you cannot view the LLW either from the Web site or from your computer, contact your local Lenovo office or reseller to obtain a printed version of the LLW.

Access Linux distributions

Linux is an open-source operating system, and popular Linux distributions include Ubuntu and Fedora.

To learn more about the Ubuntu operating system, go to:

https://www.ubuntu.com

To learn more about the Fedora operating system, go to:

https://getfedora.org/

Get support information

If you need help, service, technical assistance, or more information about the Linux operating system or other applications, contact the provider of the Linux operating system or the provider of the application. If you need the service and support for hardware components shipped with your computer, contact Lenovo. For more information about how to contact Lenovo, refer to the *User Guide* and *Safety and Warranty Guide*.

To access the latest *User Guide* and *Safety and Warranty Guide*, go to:

https://pcsupport.lenovo.com

© Copyright Lenovo 2020, 2021

Appendix D. Compliance and TCO Certified information

This chapter provides regulatory, environmental, RoHS, and ENERGY STAR information about Lenovo products.

Radio frequency compliance statements

Computer models equipped with wireless communications comply with the radio frequency and safety standards of any country or region in which it has been approved for wireless use.

Besides this document, ensure that you read the *Regulatory Notice* for your country or region before using the wireless devices contained in your computer.

Wireless-related information

This topic provides wireless-related information about Lenovo products.

Wireless interoperability

Wireless-LAN card is designed to be interoperable with any wireless-LAN product that is based on Direct Sequence Spread Spectrum (DSSS), Complementary Code Keying (CCK), and/or Orthogonal Frequency Division Multiplexing (OFDM) radio technology, and is compliant to:

- The 802.11b/g Standard, 802.11a/b/g, 802.11n, 802.11ax, or 802.11ac on wireless-LANs, as defined by the Institute of Electrical and Electronics Engineers.
- The Wireless Fidelity (Wi-Fi®) certification as defined by the Wi-Fi Alliance®.

Notes:

- Some models may not support 802.11ax, depending on your wireless configurations.
- For some countries or regions, use of 802.11ax may be disabled according to your local regulations.

Usage environment and your health

This computer contains integrated wireless cards that operate within the guidelines identified by radio frequency (RF) safety standards and recommendations; therefore, Lenovo believes that this product is safe for use by consumers. These standards and recommendations reflect the consensus of the worldwide scientific community, and result from deliberations of panels and committees of scientists, who continually review and interpret the extensive research literature.

In some situations or environments, the use of wireless devices might be restricted by the proprietor of a building or responsible representatives of an organization. For example, these situations and areas might include the following:

- On board of airplanes, in hospitals or near petrol stations, blasting areas (with electro-explosive devices), medical implants or body-worn electronic medical devices, such as pace makers.
- In any other environment where the risk of interference to other devices or services is perceived or identified as harmful.

If you are uncertain of the policy that applies to the use of wireless devices in a specific area (such as an airport or hospital), you are encouraged to ask for authorization to use a wireless device prior to turning on the computer.

© Copyright Lenovo 2020, 2021

Locate the UltraConnect wireless antennas

Your computer has an UltraConnect™ wireless antenna system. You can enable wireless communication wherever you are.

The following illustration shows the antenna locations on your computer:

1 Wireless LAN antenna (main)
2 Wireless LAN antenna (auxiliary)

Locate wireless regulatory notices

For more information about the wireless regulatory notices, refer to the *Regulatory Notice* at https://support.lenovo.com.

European Union — compliance with the Radio Equipment Directive

This product is in conformity with all the requirements and essential norms that apply to EU Council Radio Equipment Directive 2014/53/EU on the approximation of the laws of the Member States relating to radio equipment. The full text of the system EU declaration of conformity is available at:

https://www.lenovo.com/us/en/compliance/eu-doc

Lenovo cannot accept responsibility for any failure to satisfy the protection requirements resulting from a non-recommended modification of the product, including the installation of option cards from other manufacturers. This product has been tested and found to comply with the limits for Class B equipment according to European Standards harmonized in the Directives in compliance. The limits for Class B equipment were derived for typical residential environments to provide reasonable protection against interference with licensed communication devices.

Brazil

Este equipamento não tem direito à proteção contra interferência prejudicial e não pode causar interferência em sistemas devidamente autorizados.

This equipment is not protected against harmful interference and may not cause interference with duly authorized systems.

Mexico

Advertencia: En Mexico la operación de este equipo está sujeta a las siguientes dos condiciones: (1) es posible que este equipo o dispositivo no cause interferencia perjudicial y (2) este equipo o dispositivo debe aceptar cualquier interferencia, incluyendo la que pueda causar su operación no deseada.

Singapore

Complies with
IMDA Standards
DB102306

Korea

무선설비 전파 혼신 **(사용주파수 2400～2483.5 , 5725～5825 무선제품해당)**

해당 무선설비가 전파혼신 가능성이 있으므로 인명안전과 관련된 서비스는 할 수 없음

SAR 정보

본 장치는 전파 노출에 대한 가이드라인을 충족합니다.

본 장치는 무선 송수신기 입니다. 본 장치는 국제 가이드라인으로 권장되는 전파 노출에 대한 제한을 초과하지 않도록 설계되었습니다. 장치 액세서리 및 최신 부품을 사용할 경우 SAR 값이 달라질 수 있 습니다. SAR 값은 국가 보고 및 테스트 요구 사항과 네트워크 대역에 따라 다를 수 있습니다. 본 장치 는 사람의 신체에서 20mm 이상의 거리에서 사용할 수 있습니다.

Environmental information of countries and regions

This section provides environmental, recycling, and RoHS information about Lenovo products.

Recycling and environmental information

Lenovo encourages owners of information technology (IT) equipment to responsibly recycle their equipment when it is no longer needed. Lenovo offers a variety of programs and services to assist equipment owners in recycling their IT products. For information about recycling Lenovo products, go to:

https://www.lenovo.com/recycling

The latest environmental information about our products is available at:

https://www.lenovo.com/ecodeclaration

Important battery recycling and WEEE information

Take back and recycling information for WEEE and batteries/accumulators in the European Union and the United Kingdom

The crossed-out wheeled bin marking applies only to countries with WEEE and batteries waste regulations including the European Union (EU), and United Kingdom (UK).

Appliances and batteries/accumulators are labeled in accordance with local regulations concerning waste electrical and electronic equipment (WEEE) and waste batteries and waste accumulators. These regulations

determine the framework for the return and recycling of used appliances and used batteries/accumulators as applicable within each geography. This label is applied to various products to indicate that the product is not to be thrown away, but rather put in the established collection systems for reclaiming these end of life products.

The label on the battery may also include a chemical symbol for the metal concerned in the battery (Pb for lead, Hg for mercury, and Cd for cadmium).

Users of electrical and electronic equipment (EEE) and users of batteries/accumulators with the crossed-out wheeled bin marking must not dispose of end of life products as unsorted municipal waste, but use the collection framework available to them for the return, recycle, and recovery of WEEE and waste batteries/accumulators and to minimize any potential effects of EEE and batteries on the environment and human health due to the presence of hazardous substances.

Lenovo electrical and electronic equipment (EEE) may contain parts and components, which at end-of-life might qualify as hazardous waste.

EEE and waste electrical and electronic equipment (WEEE) can be delivered free of charge to the place of sale or any distributor that sells electrical and electronic equipment of the same nature and function as the used EEE or WEEE.

Before placing electrical and electronic equipment (EEE) in the waste collection stream or in waste collection facilities, the end user of equipment containing batteries and/or accumulators must remove those batteries and accumulators for separate collection.

Dispose of lithium batteries and battery packs from Lenovo products:
A coin-cell type lithium battery might be installed inside your Lenovo product. You can find details about the battery in the product documentation. If the battery needs to be replaced, contact your place of purchase or contact Lenovo for service. If you need to dispose of a lithium battery, insulate it with vinyl tape, contact your place of purchase or a waste-disposal operator, and follow their instructions.

Your Lenovo device might contain a lithium-ion battery pack or a nickel metal hydride battery pack. You can find details on the battery pack in the product documentation. If you need to dispose of a battery pack, insulate it with vinyl tape, contact Lenovo sales, service, or your place of purchase, or a waste-disposal operator, and follow their instructions. You also can refer to the instructions provided in the user guide for your product.

For proper collection and treatment, go to:

https://www.lenovo.com/environment

For additional WEEE information, go to:

https://www.lenovo.com/recycling

WEEE information for Hungary

Lenovo, as a producer, bears the cost incurred in connection with the fulfillment of Lenovo's obligations under Hungary Law No. 197/2014 (VIII.1.) subsections (1)-(5) of section 12.

Japan recycling statements

Collect and recycle a disused Lenovo computer or monitor

If you are a company employee and need to dispose of a Lenovo computer or monitor that is the property of the company, you must do so in accordance with the Law for Promotion of Effective Utilization of Resources. Computers and monitors are categorized as industrial waste and should be properly disposed of by an industrial waste disposal contractor certified by a local government. In accordance with the Law for Promotion of Effective Utilization of Resources, Lenovo Japan provides, through its PC Collecting and Recycling Services, for the collecting, reuse, and recycling of disused computers and monitors. For details, visit the Lenovo Web site at:

https://www.lenovo.com/recycling/japan

Pursuant to the Law for Promotion of Effective Utilization of Resources, the collecting and recycling of home-used computers and monitors by the manufacturer was begun on October 1, 2003. This service is provided free of charge for home-used computers sold after October 1, 2003. For details, go to:

https://www.lenovo.com/recycling/japan

Dispose of Lenovo computer components

Some Lenovo computer products sold in Japan may have components that contain heavy metals or other environmental sensitive substances. To properly dispose of disused components, such as a printed circuit board or drive, use the methods described above for collecting and recycling a disused computer or monitor.

Dispose of disused lithium batteries from Lenovo computers

A button-shaped lithium battery is installed inside your Lenovo computer to provide power to the computer clock while the computer is off or disconnected from the main power source. If you need to replace it with a new one, contact your place of purchase or contact Lenovo for service. If you need to dispose of a disused lithium battery, insulate it with vinyl tape, contact your place of purchase or an industrial-waste-disposal operator, and follow their instructions.

Disposal of a lithium battery must comply with local ordinances and regulations.

Dispose of a disused battery from Lenovo notebook computers

Your Lenovo notebook computer has a lithium ion battery or a nickel metal hydride battery. If you are a company employee who uses a Lenovo notebook computer and need to dispose of a battery, contact the proper person in Lenovo sales, service, or marketing, and follow that person's instructions. You also can refer to the instructions at:

https://www.lenovo.com/jp/ja/environment/recycle/battery/

If you use a Lenovo notebook computer at home and need to dispose of a battery, you must comply with local ordinances and regulations. You also can refer to the instructions at:

https://www.lenovo.com/jp/ja/environment/recycle/battery/

Recycling information for Brazil

Declarações de Reciclagem no Brasil

Descarte de um Produto Lenovo Fora de Uso

Equipamentos elétricos e eletrônicos não devem ser descartados em lixo comum, mas enviados à pontos de coleta, autorizados pelo fabricante do produto para que sejam encaminhados e processados por empresas especializadas no manuseio de resíduos industriais, devidamente certificadas pelos orgãos ambientais, de acordo com a legislação local.

A Lenovo possui um canal específico para auxiliá-lo no descarte desses produtos. Caso você possua um produto Lenovo em situação de descarte, ligue para o nosso SAC ou encaminhe um e-mail para: reciclar@lenovo.com, informando o modelo, número de série e cidade, a fim de enviarmos as instruções para o correto descarte do seu produto Lenovo.

Battery recycling information for the European Union

Notice: This mark applies only to countries within the European Union (EU).

Batteries or packaging for batteries are labeled in accordance with European Directive 2006/66/EC concerning batteries and accumulators and waste batteries and accumulators. The Directive determines the framework for the return and recycling of used batteries and accumulators as applicable throughout the European Union. This label is applied to various batteries to indicate that the battery is not to be thrown away, but rather reclaimed upon end of life per this Directive.

In accordance with the European Directive 2006/66/EC, batteries and accumulators are labeled to indicate that they are to be collected separately and recycled at end of life. The label on the battery may also include a chemical symbol for the metal concerned in the battery (Pb for lead, Hg for mercury, and Cd for cadmium). Users of batteries and accumulators must not dispose of batteries and accumulators as unsorted municipal waste, but use the collection framework available to customers for the return, recycling, and treatment of batteries and accumulators. Customer participation is important to minimize any potential effects of batteries and accumulators on the environment and human health due to the potential presence of hazardous substances.

Before placing electrical and electronic equipment (EEE) in the waste collection stream or in waste collection facilities, the end user of equipment containing batteries and/or accumulators must remove those batteries and accumulators for separate collection.

Dispose of lithium batteries and battery packs from Lenovo products

A coin-cell type lithium battery might be installed inside your Lenovo product. You can find details about the battery in the product documentation. If the battery needs to be replaced, contact your place of purchase or contact Lenovo for service. If you need to dispose of a lithium battery, insulate it with vinyl tape, contact your place of purchase or a waste-disposal operator, and follow their instructions.

Dispose of battery packs from Lenovo products

Your Lenovo device might contain a lithium-ion battery pack or a nickel metal hydride battery pack. You can find details on the battery pack in the product documentation. If you need to dispose of a battery pack, insulate it with vinyl tape, contact Lenovo sales, service, or your place of purchase, or a waste-disposal operator, and follow their instructions. You also can refer to the instructions provided in the user guide for your product.

For proper collection and treatment, go to:

https://www.lenovo.com/environment

Recycling information for mainland China

《废弃电器电子产品回收处理管理条例》提示性说明

联想鼓励拥有联想品牌产品的用户当不再需要此类产品时，遵守国家废弃电器电子产品回收处理相关法律法规，将其交给当地具有国家认可的回收处理资质的厂商进行回收处理。更多回收服务信息，请点击进入http://support.lenovo.com.cn/activity/551.htm

Battery recycling information for Taiwan

廢電池請回收

Battery recycling information for the United States and Canada

RECYCLE RBRC Li-ion 1.800.822.8837

US & Canada Only

Restriction of Hazardous Substances (RoHS) Directive of countries and regions

The latest environmental information about Lenovo products is available at:

https://www.lenovo.com/ecodeclaration

European Union RoHS

This Lenovo product, with included parts (cables, cords, and so on) meets the requirements of Directive 2011/65/EU on the restriction of the use of certain hazardous substances in electrical and electronic equipment ("RoHS recast" or "RoHS 2").

For more information about Lenovo worldwide compliance on RoHS, go to:

https://www.lenovo.com/rohs-communication

Turkish WEEE / RoHS

Türkiye AEEE Yönetmeliğine Uygunluk Beyanı

Bu Lenovo ürünü, T.C. Çevre ve Orman Bakanlığı'nın “Atık Elektrik ve Elektronik Eşyalarda Bazı Zararlı Maddelerin Kullanımının Sınırlandırılmasına Dair Yönetmelik (AEEE)” direktiflerine uygundur.

AEEE Yönetmeliğine Uygundur.

Ukraine RoHS

Цим підтверджуємо, що продукція Леново відповідає вимогам нормативних актів України, які обмежують вміст небезпечних речовин

India RoHS

RoHS compliant as per E-Waste (Management) Rules.

Mainland China RoHS

The information in the following table is applicable to products manufactured on or after January 1, 2015 for sale in the People’s Republic of China.

产品中有害物质的名称及含量

部件名称	铅（Pb）	汞（Hg）	镉（Cd）	六价铬（Cr（VI））	多溴联苯（PBB）	多溴二苯醚（PBDE）
印刷电路板组件*	X	O	O	O	O	O
硬盘	X	O	O	O	O	O
光驱	X	O	O	O	O	O
LCD 面板（LED 背光源）	X	O	O	O	O	O
键盘	X	O	O	O	O	O
内存	X	O	O	O	O	O
电池	X	O	O	O	O	O
电源适配器	X	O	O	O	O	O
底壳、顶盖和扬声器	X	O	O	O	O	O

注：
本表依据SJ/T 11364的规定编制。

O：表示该有害物质在该部件所有均质材料中的含量均在 GB/T 26572标准规定的限量要求以下。

X：表示该有害物质至少在该部件的某一均质材料中的含量超出GB/T 26572标准规定的限量要求。标有“X”的部件，皆因全球技术发展水平限制而无法实现有害物质的替代。

* 印刷电路板组件包括印刷电路板及其零部件、电容和连接器等。

图示：

在中华人民共和国境内销售的电子信息产品上将印有“环保使用期限”（EPuP）符号。圆圈中的数字代表产品的正常环保使用期限。

Supplier's declaration of conformity label for mainland China RoHS

依照《电器电子产品有害物质限制使用合格评定制度实施安排》，《绿色产品标识使用管理办法》以及市场监管总局关于明确电器电子产品有害物质限制使用合 格评定制度“供方符合性标志”的公告中对于合格评定标识的相关要求，联想公司 针对纳入《电器电子产品有害物质限制使用达标管理目录》内的产品，使用自我声明的合格评定方式，并使用如下合格评定标识：

Taiwan RoHS

單元 Unit	限用物質及其化學符號 Restricted substances and its chemical symbols					
	鉛 Lead (Pb)	汞 Mercury (Hg)	鎘 Cadmium (Cd)	六價鉻 Hexavalent chromium (Cr^{+6})	多溴聯苯 Polybrominated biphenyls (PBB)	多溴二苯醚 Polybrominated diphenyl ethers (PBDE)
印刷電路板組件	-	○	○	○	○	○
儲存裝置	-	○	○	○	○	○
顯示螢幕	-	○	○	○	○	○
鍵盤	-	○	○	○	○	○
記憶體	-	○	○	○	○	○
電源供應器	-	○	○	○	○	○
外殼	-	○	○	○	○	○
電源線組	-	○	○	○	○	○
機械組件	-	○	○	○	○	○
配件	-	○	○	○	○	○

備考 1. 〝超出 0.1 wt %〞及〝超出 0.01 wt %〞係指限用物質之百分比含量超出百分比含量基準值。

Note 1: "Exceeding 0.1 wt %" and "exceeding 0.01 wt %" indicate that the percentage content of the restricted substance exceeds the reference percentage value of presence condition.

備考2. 〝○〞係指該項限用物質之百分比含量未超出百分比含量基準值。

Note 2: "○" indicates that the percentage content of the restricted substance does not exceed the percentage of reference value of presence.

備考3. 〝－〞係指該項限用物質為排除項目。

Note 3: The "－" indicates that the restricted substance corresponds to the exemption.

單元說明

單元	說明
儲存裝置	泛指硬碟機、固態硬碟等
機械組件	泛指光碟機、風扇、麥克風、攝影機、喇叭等
配件	泛指外接式光碟機（選配）、轉接線（選配）、觸控筆（選配）等

Electromagnetic emission notices

Federal Communications Commission (FCC) Supplier's Declaration of Conformity

The following information refers to the following products:

Product name	Machine type(s)
ThinkPad L13 Gen 2	20VH, 20VJ, 21AB, and 21AC

ThinkPad L13 Yoga Gen 2	20VK, 20VL, 21AD, and 21AE
ThinkPad S2 Gen 6	20VM and 21AF
ThinkPad S2 Yoga Gen 6	20VN and 21AG

This equipment has been tested and found to comply with the limits for a Class B digital device, pursuant to Part 15 of the FCC Rules. These limits are designed to provide reasonable protection against harmful interference in a residential installation. This equipment generates, uses, and can radiate radio frequency energy and, if not installed and used in accordance with the instructions, may cause harmful interference to radio communications. However, there is no guarantee that interference will not occur in a particular installation. If this equipment does cause harmful interference to radio or television reception, which can be determined by turning the equipment off and on, the user is encouraged to try to correct the interference by one or more of the following measures:

- Reorient or relocate the receiving antenna.
- Increase the separation between the equipment and receiver.
- Connect the equipment into an outlet on a circuit different from that to which the receiver is connected.
- Consult an authorized dealer or service representative for help.

Lenovo is not responsible for any radio or television interference caused by using other than recommended cables and connectors or by unauthorized changes or modifications to this equipment. Unauthorized changes or modifications could void the user's authority to operate the equipment.

This device complies with Part 15 of the FCC Rules. Operation is subject to the following two conditions: (1) this device may not cause harmful interference, and (2) this device must accept any interference received, including interference that may cause undesired operation.

Responsible Party:
Lenovo (United States) Incorporated
7001 Development Drive
Morrisville, NC 27560
Email: FCC@lenovo.com

FCC ID and IC Certification information

You can find the FCC and IC Certification information through one of the following methods:

- Through an electronic-label screen (E-label screen) preinstalled on your computer. To view the E-label screen, see "Regulatory labels" on page 91.
- On a physical label attached to the outside of your computer shipping carton.

Industry Canada compliance statement

CAN ICES-003(B)/NMB-003(B)

European Union conformity

EU Contact: Lenovo (Slovakia), Landererova 12, 811 09 Bratislava, Slovakia

Compliance with the EMC Directive

This product is in conformity with the protection requirements of EU Council Directive 2014/30/EU on the approximation of the laws of the Member States relating to electromagnetic compatibility.

This product has been tested and found to comply with the limits for Class B equipment according to European Standards harmonized in the Directives in compliance. The Class B requirements for equipment are intended to offer adequate protection to broadcast services within residential environments.

EU ErP (EcoDesign) Directive (2009/125/EC) - external power adapters (Regulation (EU) 2019/1782)

Lenovo products are designed to work with a range of compatible power adapters. Access https://www.lenovo.com/us/en/compliance/eu-doc to view the compatible power adapters. For the detailed power adapter specifications for your computer, go to https://support.lenovo.com.

German Class B compliance statement

Hinweis zur Einhaltung der Klasse B zur elektromagnetischen Verträglichkeit

Dieses Produkt entspricht den Schutzanforderungen der EU-Richtlinie zur elektromagnetischen Verträglichkeit Angleichung der Rechtsvorschriften über die elektromagnetische Verträglichkeit in den EU-Mitgliedsstaaten und hält die Grenzwerte der Klasse B der Norm gemäß Richtlinie.

Um dieses sicherzustellen, sind die Geräte wie in den Handbüchern beschrieben zu installieren und zu betreiben. Des Weiteren dürfen auch nur von der Lenovo empfohlene Kabel angeschlossen werden. Lenovo übernimmt keine Verantwortung für die Einhaltung der Schutzanforderungen, wenn das Produkt ohne Zustimmung der Lenovo verändert bzw. wenn Erweiterungskomponenten von Fremdherstellern ohne Empfehlung der Lenovo gesteckt/eingebaut werden.

Zulassungsbescheinigung laut dem Deutschen Gesetz über die elektromagnetische Verträglichkeit von Betriebsmitteln, EMVG vom 20. Juli 2007 (früher Gesetz über die elektromagnetische Verträglichkeit von Geräten), bzw. der EU Richtlinie 2014/30/EU, der EU Richtlinie 2014/53/EU Artikel 3.1b), für Geräte der Klasse B.

Dieses Gerät ist berechtigt, in Übereinstimmung mit dem Deutschen EMVG das EG-Konformitätszeichen - CE - zu führen. Verantwortlich für die Konformitätserklärung nach Paragraf 5 des EMVG ist die Lenovo (Deutschland) GmbH, Meitnerstr. 9, D-70563 Stuttgart.

Japan VCCI Class B compliance statement

この装置は、クラスB機器です。この装置は、住宅環境で使用することを目的としていますが、この装置がラジオやテレビジョン受信機に近接して使用されると、受信障害を引き起こすことがあります。
取扱説明書に従って正しい取り扱いをして下さい。

VCCI-B

Japan compliance statement for products which connect to the power mains with rated current less than or equal to 20 A per phase

日本の定格電流が 20A/相 以下の機器に対する高調波電流規制
高調波電流規格 JIS C 61000-3-2 適合品

Japan notice for ac power cord

The ac power cord shipped with your product can be used only for this specific product. Do not use the ac power cord for other devices.

本製品およびオプションに電源コード・セットが付属する場合は、
それぞれ専用のものになっていますので他の電気機器には使用し
ないでください。

Other compliance and TCO Certified information of countries and regions

This section provides other compliance information about Lenovo products.

Certification-related information

Product name	Compliance ID	Machine types
ThinkPad L13 Gen 2	TP00114B	20VH, 20VJ, 21AB, and 21AC
ThinkPad L13 Yoga Gen 2	TP00114B0*	20VK, 20VL, 21AD, and 21AE
ThinkPad S2 Gen 6	TP00114B1*	20VM and 21AF
ThinkPad S2 Yoga Gen 6	TP00114C TP00114C0* TP00114C1*	20VN and 21AG

* for India only

The latest compliance information is available at:

https://www.lenovo.com/compliance

Regulatory labels

Depending on your country or region, you can find the government-required regulatory information through one of the following methods:

- On a physical label attached to the outside of your computer shipping carton
- On a physical label attached to your computer
- Through an electronic-label screen (E-label screen) preinstalled on your computer

To access the E-label screen, restart the computer. When the logo screen is displayed, press F9, or tap the prompt to enter the Startup Interrupt menu and the Regulatory Information option subsequently.

Korean E-label notice

이 제품은 전자적표시(e-labelling)가 되어있습니다.

TCO Certified

Selected models are TCO Certified and bear the TCO Certified logo.

Note: TCO Certified is an international third-party sustainability certification for IT products. For details, go to https://www.lenovo.com/us/en/compliance/tco.

Export classification notice

This product is subject to the United States Export Administration Regulations (EAR) and has an Export Classification Control Number (ECCN) of 5A992.c. It can be re-exported except to any of the embargoed countries in the EAR E1 country list.

Lenovo product service information for Taiwan

委製商/進口商名稱: 荷蘭商聯想股份有限公司台灣分公司
進口商地址: 臺北市中山區樂群三路128號16樓
進口商電話: 0800-000-702 (代表號)

Taiwan precautionary vision statement

警語：使用過度恐傷害視力

注意事項：

- 使用30分鐘請休息10分鐘。
- 未滿2歲幼兒不看螢幕，2歲以上每天看螢幕不要超過1小時。

Supplemental information for the Eurasian Union

Назначение	персональный компьютер для личного и служебного использования, для передачи данных, с поддержкой различных профилей подключения (Wi-Fi, Bluetooth и пр.).
Изготовитель	Леново ПЦ ХК Лимитед, 23/Ф Линколн Хаус, Тайку Плэйс 979 Кингз Роуд, Куарри Бэй, Гонконг (Lenovo PC HK Limited, 23/F Lincoln House, Taikoo Place 979 King's Road, Quarry Bay, Hong Kong)
Страна производства	Китай
Наименование и местонахождение уполномоченного изготовителем лица	ООО «Леново (Восточная Европа/Азия)» 143401, Московская область, г. Красногорск, бульвар Строителей, дом 4, корпус 1, помещение VII, тел. +7 495 645 83 38, факс +7 495 645 78 77.
Импортер	Наименование, адрес импортера и информация для связи с ним указаны на этикетке* на упаковке продукции. **Согласно ГОСТ 2.601-2013 «Единая система конструкторской документации. Эксплуатационные документы», пункт 5.1, подпункт 5.1.2, этикетка является видом эксплуатационных документов.*
Дата изготовления (месяц и год)	Указана на этикетке* на упаковке продукции, в графе Date (дата указана в формате год-месяц-дата). Для получения более подробной информации посетите веб-сайт: https://support.lenovo.com
Единый знак обращения на рынке стран Таможенного союза	EAC

Brazil audio notice

Ouvir sons com mais de 85 decibéis por longos períodos pode provocar danos ao sistema auditivo.

ENERGY STAR model information

ENERGY STAR is a joint program of the U.S. Environmental Protection Agency and the U.S. Department of Energy aimed at saving money and protecting the environment through energy efficient products and practices.

Lenovo is proud to offer products with the ENERGY STAR certified designation. Lenovo computers, if carry an ENERGY STAR mark, have been designed and tested to conform to the ENERGY STAR program requirements for computers as prescribed by the U.S. Environmental Protection Agency. For a certified computer, an ENERGY STAR mark may be affixed to the product, the product packaging, or displayed electronically on the E-label screen or the power settings interface.

By using ENERGY STAR compliant products and taking advantage of the power management features of your computer, you reduce the consumption of electricity. Reduced electrical consumption contributes to potential financial savings, a cleaner environment, and the reduction of greenhouse gas emissions. For more information about ENERGY STAR, go to https://www.energystar.gov.

Lenovo encourages you to make efficient use of energy an integral part of your day-to-day operations. To help in this endeavor, Lenovo has preset a default power plan. To change the power plan, see “Change the power settings” on page 26.

Appendix E. Notices and trademarks

Notices

Lenovo may not offer the products, services, or features discussed in this document in all countries. Consult your local Lenovo representative for information on the products and services currently available in your area. Any reference to a Lenovo product, program, or service is not intended to state or imply that only that Lenovo product, program, or service may be used. Any functionally equivalent product, program, or service that does not infringe any Lenovo intellectual property right may be used instead. However, it is the user's responsibility to evaluate and verify the operation of any other product, program, or service.

Lenovo may have patents or pending patent programs covering subject matter described in this document. The furnishing of this document does not give you any license to these patents. You can send license inquiries, in writing, to:

Lenovo (United States), Inc.
8001 Development Drive
Morrisville, NC 27560
U.S.A.
Attention: Lenovo Director of Licensing

LENOVO PROVIDES THIS PUBLICATION "AS IS" WITHOUT WARRANTY OF ANY KIND, EITHER EXPRESS OR IMPLIED, INCLUDING, BUT NOT LIMITED TO, THE IMPLIED WARRANTIES OF NON-INFRINGEMENT, MERCHANTABILITY OR FITNESS FOR A PARTICULAR PURPOSE. Some jurisdictions do not allow disclaimer of express or implied warranties in certain transactions, therefore, this statement may not apply to you.

Changes are made periodically to the information herein; these changes will be incorporated in new editions of the publication. To provide better service, Lenovo reserves the right to improve and/or modify the products and software programs described in the manuals included with your computer, and the content of the manual, at any time without additional notice.

The software interface and function and hardware configuration described in the manuals included with your computer might not match exactly the actual configuration of the computer that you purchase. For the configuration of the product, refer to the related contract (if any) or product packing list, or consult the distributor for the product sales. Lenovo may use or distribute any of the information you supply in any way it believes appropriate without incurring any obligation to you.

The products described in this document are not intended for use in implantation or other life support applications where malfunction may result in injury or death to persons. The information contained in this document does not affect or change Lenovo product specifications or warranties. Nothing in this document shall operate as an express or implied license or indemnity under the intellectual property rights of Lenovo or third parties. All information contained in this document was obtained in specific environments and is presented as an illustration. The result obtained in other operating environments may vary.

Lenovo may use or distribute any of the information you supply in any way it believes appropriate without incurring any obligation to you.

Any references in this publication to non-Lenovo Web sites are provided for convenience only and do not in any manner serve as an endorsement of those Web sites. The materials at those Web sites are not part of the materials for this Lenovo product, and use of those Web sites is at your own risk.

© Copyright Lenovo 2020, 2021

Any performance data contained herein was determined in a controlled environment. Therefore, the result obtained in other operating environments may vary significantly. Some measurements may have been made on development-level systems and there is no guarantee that these measurements will be the same on generally available systems. Furthermore, some measurements may have been estimated through extrapolation. Actual results may vary. Users of this document should verify the applicable data for their specific environment.

This document is copyrighted by Lenovo and is not covered by any open source license, including any Linux agreement(s) which may accompany software included with this product. Lenovo may update this document at any time without notice.

For the latest information or any questions or comments, contact or visit the Lenovo Web site:

https://support.lenovo.com

Trademarks

LENOVO, LENOVO logo, THINKPAD, THINKPAD logo, TRACKPOINT, ULTRACONNECT, and Yoga are trademarks of Lenovo. Intel is a trademark of Intel Corporation or its subsidiaries in the U.S. and/or other countries. Microsoft, Windows, Direct3D, BitLocker, and Cortana are trademarks of the Microsoft group of companies. DisplayPort is trademark of the Video Electronics Standards Association. Linux is the registered trademark of Linus Torvalds in the U.S. and other countries. Ubuntu is a registered trademark of Canonical Ltd. “Fedora” is a registered trademark of Red Hat, Inc. The terms HDMI and HDMI High-Definition Multimedia Interface are trademarks or registered trademarks of HDMI Licensing LLC in the United States and other countries. Wi-Fi, Wi-Fi Alliance, and Miracast are registered trademarks of Wi-Fi Alliance. Linux is the registered trademark of Linus Torvalds in the U.S. and other countries. Ubuntu is a registered trademark of Canonical Ltd. “Fedora” is a registered trademark of Red Hat, Inc. USB-C® is a registered trademark of USB Implementers Forum. All other trademarks are the property of their respective owners. © 2021 Lenovo.

Lenovo