ZXC BTSB I28A
CDMA2000 Base Transceiver Sation-I2

Installation Manual

ZTE (H.K.) LIMITED

ZXC BTSB I28A CDMA2000 Base Transceiver Sation-I2 Installation Manual

Manual Version 20050401-R1.0
Product Version V1.0

Copyright © 2005 ZTE (H.K.) LIMITED

All rights reserved.

No part of this documentation may be excerpted, reproduced, translated, annotated or duplicated, in any form or by any means without the prior written permission of ZTE (H.K.) LIMITED.

* * * *

ZTE (H.K.) LIMITED

Room 2906, China Recources Bldg.26 Harbour Road, Wanchai, HongKong

Website: http://www.zte.com.cn

Postcode: 518057

Customer Support Center: (+86755) 26771900 800-9830-9830

Fax: (+86755) 26770801

Email: support@zte.com.cn

* * * *

Suggestions and Feedback

To improve the quality of ZTE product documentation and offer better services to our customers, we hope you can give us your suggestions and comments on our documentation and fax this form to +86-755-26770160; or mail to “Marketing center 3rd floor ZTE Plaza, Keji Road South, Hi-Tech Industrial Park, Nanshan District, Shenzhen, P. R. China”. Our postcode is 518057.

Document name	ZXC10 BTSB I28A(V1.0) CDMA2000 Base Transceiver Sation-I2 Installation Manual			
Product version	V1.0		Document version	20050401-R1.0
Equipment installation time				
Your information				
Name		Company		
Postcode		Company address		
Telephone			E-mail	
Your evaluation of this documentation	Presentation: How is information presented? (Introductions, procedures, illustrations, others) ☐ Good ☐ Fair ☐ Average ☐ Poor ☐ Bad			
	Accessibility: Can you find the information you want? (Table of contents, Index, headings, numbering, others) ☐ Good ☐ Fair ☐ Average ☐ Poor ☐ Bad			
	Intelligibility: Can you understand it when you find it? (Language, vocabulary, readability, others) ☐ Good ☐ Fair ☐ Average ☐ Poor ☐ Bad			
Your suggestions for improvement of this documentation	Presentation:			
	Accessibility:			
	Intelligibility:			
Your other suggestions on ZTE product documentation				

Preface

About This Manual

This manual introduces the hardware installation flow and method of the ZXC10 BTSB I28A.

It is one of the manuals of the CDMA cellular mobile communication system of ZTE. This manual is intended to provide basic installation operation guide to the engineering staff that install the ZXC10 BTSB I28A of ZTE. Operation and maintenance staff of the equipment can also use it as reference.

Standardized hardware installation is the basis for the normal and stable operation of the BS and is thus important in the project engineering. To guide the hardware installation of ZXC10 BTSB I28A, this manual is arranged in the order of engineering installation. This manual first briefs the equipment composition, which enables the engineering staff to have an overall understanding of the ZXC10 BTSB of ZTE. Then it details the installation flow of the equipment and the installation check.

How to Use This Manual

This manual comprises 15 chapters:

Chapter 1 Overview of BTS Installation briefs the equipment installation and commissioning flow, the hardware installation flow and the hardware installation precautions for the BTS system.

Chapter 2 Installation Preparation introduces the preparations prior to the BTSB installation, including installation environment check, and preparation for tools, instruments and technical documentation.

Chapter 3 Unpacking Inspection describes unpacking, acceptance and handover of the goods.

Chapter 4 Installing the Cabinets describes the installation of the BTSB cabinet, and the layout, connection and fixing of multiple cabinets.

Chapter 5 Power System Installation describes the installation procedure of the BTSB power system.

Chapter 6 Installing the Grounding System describes the installation procedure of the BTSB grounding system.

Chapter 7 Installing the Cabinet Internal Cables introduces the types of BTSB cabinet internal cables, and describes the installation procedure of them.

Chapter 8 Installing the Trunk Cables describes the installation procedure of the BTSB trunk cables, and explains how to prepare the E1 cables and how to convert the 75 Ω trunk cables into the 120 Ω trunk cables.

Chapter 9 Installing the Monitoring System introduces the composition of the monitoring system and describes its installation procedure.

Chapter 10 Installing the Main Antenna Feeder System describes the installation preparation, the installation flow and the specific installation procedure of the main antenna feeder system, and explains how to check and test the antenna feeder and how to conduct waterproof treatment on the connector.

Chapter 11 Installing the GPS Antenna Feeder System describes the installation preparation, the installation flow and the specific installation procedure of the GPS antenna feeder system.

Chapter 12 Installing the Board describes the types and functions of boards used in the BTSB system, and how to install and replace them.

Chapter 13 Hardware Installation Check describes the hardware installation check requirements of the BTSB system.

Chapter 14 Power-on/Power-off describes the check prior to the BTSB power-on, and the detailed power-on and power-off operation procedures.

Appendix A gives an abbreviation form.

Conventions

Describing notational conventions, keyboard operation convention, mouse operation convention and four safety signs.

1. Notational conventions

   Angular brackets "<and>" identify names of keys and buttons, and the information typed by an operator from a terminal. Square brackets "[and]" indicate a man-machine interface, menu item, data list, or field name. The

symbol "-->" separates a multi-level menu, e.g., [File --> New --> Folder] indicates the [Folder] menu item under the [New] submenu of the menu [File].

2. Keyboard operation conventions

Format	Description
Character within angular brackets	Indicating a key or button name, e.g., <Enter>, <Tab>, <Backspace>, and <a>
<key 1+key 2>	Indicating to hold several keys down at the same time. For example, <Ctrl+Alt+A> indicates to hold down “Ctrl”, “Alt” and “A” three keys
<key 1, key 2>	Press Key 1 first. Then release Key 1 and press Key 2. For example, <Alt, F> indicates to press and release <Alt> key, and then press <F> key

3. Mouse operation conventions

Format	Description
Click	Refers to clicking the primary mouse button (usually the left mouse button) once
Double-click	Refers to quickly clicking the primary mouse button (usually the left mouse button) twice
Right-click	Refers to clicking the secondary mouse button (usually the right mouse button) once
Drag	Refers to pressing and holding a mouse button and move the mouse

4. Signs

Four eye-catching signs are used in this manual to emphasize important and critical information.

Note, Caution, Warning, and Danger: Used to indicate the precautions during the operation.

Statement: The actual product may differ from what is described in this manual due to frequent update of ZTE products and fast development of technologies. Please contact the local ZTE office for the latest updating information of the product.

FCC & IC STATEMENT

Before using this CDMA ZXC10 BTSB I28A19 and BTSB I208, read this important RF energy awareness and control information and operational instructions to ensure compliance with the FCC and IC RF exposure guidelines.

NOTICE: Working with the equipment while in operation, may expose the technician to RF electromagnetic fields that exceed FCC rules for human exposure. Visit the FCC website at www.fcc.gov/oet/rfsafety to learn more about the effects of exposure to RF electromagnetic fields.

Changes or modifications to this unit not expressly approved by the party responsible for compliance will void the user's authority to operate the equipment. Any change to the equipment will void FCC and IC grant.

This equipment has been tested and found to comply with the limits for a Class A digital device, pursuant to the FCC and IC Rules. This equipment generates, uses and can radiate radio frequency energy and, if not installed and used in accordance with the instructions, may cause harmful interference to radio communications. However, there is no guarantee that interference will not occur in a particular installation.

A PNALE Antenna with a maximum gain of 17dBi is authorized for use with this unit. Outside antennas must be positioned to observe minimum separation of 2.6M (8.528 feet.) for 800MHz unit and 1.6M (5.248 feet.) for 1900MHz unit from all users and bystanders. For the protection of personnel working in the vicinity of outside (uplink) antennas, the following guidelines for minimum distances between the human body and the antenna must be observed.

The installation of an antenna must be such that, under normal conditions, all personnel cannot come within 2.6M (8.528 feet.)for 800MHz unit and 1.6M (5.248 feet.) for 1900MHz unit from the outside antenna. Exceeding this minimum separation will ensure that the worker or bystander does not receive RF-exposure beyond the Maximum Permissible Exposure according to section 1.1310 i.e. limits for Controlled Exposure.

Contents

1 Overview of BTS Installation i

1.1 Overview 1-1

1.2 Hardware Installation Flow 1-4

1.3 Precautions 1-6

2 Installation Preparation 2-1

2.1 Installation Environment Inspection 2-1

2.1.1 Inspection of the Equipment Room Building 2-1

2.1.2 Inspection of the Indoor Environment 2-2

2.1.3 Inspection of Power Supply 2-3

2.1.4 Electromagnetic Radiation Protection Requirements 2-4

2.1.5 Grounding Inspection 2-4

2.1.6 Inspection of the Installation Environment for the Outdoor Antenna Feeder System 2-5

2.1.7 Safety Inspection 2-6

2.1.8 Inspection of Corollary Equipment 2-6

2.2 Preparation of Tools and Instruments 2-7

2.3 Preparation of Technical Documents 2-8

3 Unpacking Inspection 3-1

3.1 Checking the Goods against the Packing List 3-1

3.2 Unpacking the Wooden Box 3-2

3.2.1 Wooden Box Structure 3-2

3.2.2 Unpacking 3-2

3.2.3 Inspecting the Rack Outside View 3-3

3.3 Unpacking the Carton 3-3

3.3.1 Carton 3-3

3.3.2 Unpacking 3-4

3.3.3 Inspecting the Boards 3-4

3.4 Goods Acceptance and Handover 3-4

4 Installing the Cabinets 4-1

4.1 External Structure of the BTS Cabinet 4-1

4.2 Cabinet Layout 4-2

4.3 Installing a Single BTS Cabinet 4-3

4.3.1 Installation Flow of a Single Cabinet 4-3

4.3.2 Installation Procedure of a Single Cabinet 4-4

4.4 Connecting and Fixing Multiple Cabinets 4-8

4.5 Cabinet Installation Requirements 4-10

5 Power Supply System Installation 5-1

5.1 Introduction to Power Cables 5-1

5.2 Installation Flow of Power Cables 5-2

5.3 Cable Installation Procedure 5-2

6 Installing the Grounding System 6-1

6.1 Overview of the BTS Grounding System 6-1

6.2 Installing the BTS Grounding System 6-2

6.2.1 Installing the Outdoor Grounding Copper Bar 6-2

6.2.2 Installing the Feeder Grounding Clip 6-3

6.2.3 Installing the Indoor Lightning Arrester 6-6

7 Installing the Cabinet Internal Cables 7-1

7.1 Overview of the Internal Cable Installation 7-1

7.1.1 Configuration Types of BTS 7-1

7.1.2 Precautions for Installing the RF Cables on the Front Panel 7-1

7.2 Installing the Cables for the Single-carrier BTS and the Two-Carrier BTS 7-3

7.2.1 Installing the RF Cables for a Single-carrier Single-sector BTS 7-3

7.2.2 Installing the RF Cables for a Single-carrier Two-sector BTS 7-6

7.2.3 Installing the RF Cables for a Single-carrier Three-sector BTS 7-9

7.2.4 Installing the RF Cables for a Two-carrier Three-sector BTS 7-14

7.2.5 Connecting the Backplane Signal Cables for the Rack of a Single-carrier or Two-carrier BTS 7-17

7.3 Installing the Cables for the BTS of Three Carriers and Above 7-17

7.3.1 Installing the RF Cables for a Three-carrier Three-sector BTS 7-18

7.3.2 Installing the RF Cables for a Four-carrier Three-sector BTS 7-23

7.3.3 Connecting the Jumper Cables Between the Basic Cabinet and the Extended Cabinet 7-28

7.3.4 Connecting the Backplane Signal Cables of the BTS Rack 7-29

7.4 T1 Cabke 7-31

7.4.1 Functions 7-31

7.4.2 Connection Position of Two Ends, Wiring and Signal Flow Direction of Cable 7-31

7.4.3 Function 7-32

7.4.4 Connection Positions of Both Ends, Cabling and Signal Flow Direction of Cables 7-32

8 Installing the Trunk Cables 8-1

8.1 Installing the Trunk Cables 8-1

8.2 Preparing the T1 cables 8-1

9 Installing the Monitoring System 9-5

9.1 Composition of the Monitoring System 9-5

9.2 Installing the Monitoring System 9-5

9.2.1 Installing the Indoor Smog Sensor 9-5

9.2.2 Installing the Indoor Temperature/Humidity Sensor 9-6

10 Installing the Main Antenna Feeder System 10-1

10.1 Installation Preparation for the Antenna Feeder System 10-1

10.1.1 Preparations for Installation Staff 10-2
10.1.2 Installation Environment Inspection 10-2
10.1.3 Safety Measures Inspection 10-3
10.1.4 Preparation of Installation Tools 10-3
10.2 Structure of the Antenna Feeder System 10-4
10.3 Installation Content and Flow 10-5
10.3.1 Technical Parameters for Antenna Installation 10-6
10.3.2 Antenna Installation Flow 10-6
10.4 Installing the Antenna Parts 10-7
10.4.1 Determining the Antenna Installation Position 10-7
10.4.2 Handling and Hoisting the Antenna 10-8
10.4.3 Installing and Adjusting the Directional Antenna 10-9
10.4.4 Installing and Adjusting the Omni Antenna 10-12
10.4.5 Connecting and Sealing the Jumper and the Antenna 10-12
10.4.6 Installing the Feeder Window 10-13
10.4.7 Installing the Feeders 10-14
10.4.8 Installing the Indoor Jumpers 10-25
10.5 Checking and Testing the Antenna Feeders 10-25
10.6 Waterproof Treatment for the Connectors 10-25
11 Installing the GPS Antenna Feeder System 11-1
11.1 Installation Preparation for the Antenna Feeder System 11-1
11.2 Structure of the Antenna Feeder System 11-2
11.3 Installation Flow 11-2
11.4 Installing the Parts 11-3
11.4.1 Preparing the GPS Coaxial Cable Connectors 11-3
11.4.2 Installing the GPS Lightning Arrester 11-4
12 Installing the Boards 12-1

12.1 Board Types and Functions of BTS 12-1

12.2 Introduction to Main BTS Modules 12-4

12.2.1 RFE Module 12-4

12.2.2 HPA 12-6

12.2.3 TRX 12-8

12.3 Installing and Replacing Boards 12-10

12.4 Introduction to BDS Plug-in Shelves 12-13

13 Hardware Installation Check 13-1

13.1 Cabinet Check 13-1

13.2 Check of cabling rack 13-2

13.3 Laying, Binding and Identification of Cables 13-2

13.4 Installation Check in terms of power cables and ground wires 13-3

13.5 Check of T1 Cable Installation 13-5

13.6 Sensor Installation Check 13-5

13.7 Installation Check of Connections inside a Cabinet 13-6

13.8 Installation Check of Indoor 1/2" Jumpers 13-6

13.9 Installation and Check of Lightning Arrester 13-7

13.10 Installation and Check of Lightning Arrester Rack 13-7

13.11 Installation and Check of Main Feeder and GPS Feeder 13-7

13.12 Installation and Check of Feeder Windows and Waterproof Bend of the Main Feeder 13-9

13.13 Installation and Check of Three-way Feeder Card 13-10

13.14 Installation and Check of Outdoor 1/2" Jumpers 13-10

13.15 Installation and Check of an Antenna 13-11

13.16 Check of the Standing Wave Ratio of a Feeder 13-13

13.17 Check of Indoor/Outdoor Environment 13-13

14 Power-on/Power-off 14-1

14.1 Check before Power-on 14-1

14.1.1 Check of External Connections of the rack 14-1

14.1.2 Check of Rack Inside 14-1

14.2 Power-on Procedures 14-2

14.3 Power-off Procedures 14-3

Appendix A Abbreviations A-1

List of Figures

Fig. 1.1-1 Overall Structure of the BTSB I2 Rack with the BDS Plug-in Shelf 1-2

Fig. 1.1-2 Schematic Diagram of the BTS Equipment Installation 1-3

Fig. 1.2-1 Hardware Installation Flow 1-5

Fig. 3.2-1 Structure of the Wooden Box 3-2

Fig. 3.3-1 Packing Box of the Module 3-4

Fig. 4.1-1 Outside View and Dimensions of the Rack 4-2

Fig. 4.2-1 Layout of Equipment inside the ZXC10 BTSB I28A Equipment Room 4-3

Fig. 4.3-1 Assembly of the BTS Rack Base 4-4

Fig. 4.3-2 Fixing the Base with the Rack 4-5

Fig. 4.3-3 Installation Holes of the BTS Rack 4-6

Fig. 4.3-4 Fixing the Rack 4-7

Fig. 4.3-5 Installing the Rack Baffle Plates 4-8

Fig. 4.4-1 Enlarged View of the Cable Hole Cover Plate 4-9

Fig. 4.4-2 Assembling the Connecting Bars on the Cabinet Top 4-9

Fig. 4.4-3 Effect Diagram of Two Cabinets Installed 4-10

Fig. 5.1-1 BDS Power Cable Installation on BTSB 5-1

Fig. 5.2-1 Installation Flow of RFS Power 5-2

Fig. 5.3-1 RFS Power Cabling 5-3

Fig. 5.3-2 BDS Power Cabling 5-3

Fig. 5.3-3 Connection between Busbar and Backplane 5-4

Fig. 5.3-4 Connecting Power Cable (1) 5-5

Fig. 5.3-5 Connecting Power Cable (2) 5-6

Fig. 6.1-1 Wiring for the BTS Ground 6-2

Fig. 6.2-1 Profile of the Grounding Copper Bar 6-3

Fig. 6.2-2 Structure of the Grounding Clip 6-4

Fig. 6.2-3 Wrapping the Grounding Wire of the Grounding Clip with Waterproof Tape 6-5

Fig. 6.2-4 Installing the Lightning Arrester Frame 6-7

Fig. 7.1-1 Structure of the RF Cables on the Front Panel of the Rack 7-2

Fig. 7.2-1 RF Cable Connection on the Front Panel of the Rack for the Single-carrier Single-sector BTS 7-4

Fig. 7.2-2 Front Panel Wiring for the Rack of the Single-carrier Single-sector BTS with the BDS Plug-in Shelf 7-5

Fig. 7.2-3 RF Cable Connection on the Front Panel of the Rack for the Single-carrier Two-sector BTS 7-7

Fig. 7.2-4 Front Panel Wiring for the Rack of the Single-carrier Two-sector BTS with the BDS Plug-in Shelf 7-8

Fig. 7.2-5 Circuitry on the Front Panel of the Rack for the Single-carrier Three-sector BTS 7-10

Fig. 7.2-6 Front Panel Wiring for the Rack of the Single-carrier Three-sector BTS 7-11

Fig. 7.2-7 Front Panel Wiring for the Rack of the Single-carrier Three-sector BTS with the EBDS-HS Part of the EBDS Hybrid Shelf 7-12

Fig. 7.2-8 Circuitry on the Front Panel of the Rack for the Two-carrier Three-sector BTS 7-14

Fig. 7.2-9 Front Panel Wiring for the Rack of the Two-carrier Three-sector BTS 7-15

Fig. 7.3-1 Circuitry on the Front Panel of the Rack for the Three-carrier Three-sector BTS 7-19

Fig. 7.3-2 Front Panel Wiring for the Rack of the Three-carrier Three-sector BTS 7-20

Fig. 7.3-3 Circuitry on the Front Panel of the Rack for the Four-carrier Three-sector BTS 7-24

Fig. 7.3-4 Front Panel Wiring for the Rack of the Four-carrier Three-sector BTS 7-25

Fig. 7.3-5 Structure of the LINK Cable 7-30

Fig. 7.3-6 LINK Cable Structure 7-30

Fig. 7.4-1 100ΩT1 Cable Diagram 7-31

Fig. 7.4-1 Terminals of the 100Ω Cable 7-33

Fig. 7.4-2 120 Ω Cable 7-34

Fig. 7.4-3 120 Ω T1 Conversion Cable 7-35

Fig. 7.4-4 BTS Rack-top Interface Board 7-35

Fig. 8.2-1 Assembly Drawing of the CC4Y-J32 Coaxial Cable Connector 8-2

Fig. 8.2-2 Coaxial Connector of the DDF 8-3

Fig. 8.2-3 Assembly Drawing of the Coaxial Cable Connector of DDF 8-4

Fig. 9.2-1 Installing the Smog Sensor Base 9-6

Fig. 9.2-2 Installing the Temperature/Humidity Sensor 9-7

Fig. 10.2-1 Typical Structure of the Antenna Feeder System of Three-sector BTS 10-5

Fig. 10.3-1 Antenna Installation Flow 10-7

Fig. 10.4-1 Hoisting an Antenna 10-9

Fig. 10.4-2 Installing the Kathrein Antenna 10-11

Fig. 10.4-3 Adjusting the Pitch Angle of the Antenna 10-12

Fig. 10.4-4 Structure of the Feeder Window 10-14

Fig. 10.4-5 Structure of a BTS Feeder 10-15

Fig. 10.4-6 Cutting Tool for the 7/8" Feeder Connector 10-16

Fig. 10.4-7 Cutting the Feeder with a Cutter 10-17

Fig. 10.4-8 Checking the Cutting Length of the Feeder 10-17

Fig. 10.4-9 Expand the External Conductor of the Feeder with a Tube Expander 10-17

Fig. 10.4-10 Connecting the Front Part and the Back Part of the Feeder Connector 10-18

Fig. 10.4-11 Fixing the Front Part and the Back Part of the Feeder Connector 10-18

Fig. 10.4-12 Hoisting the Feeder to the Tower 10-21

Fig. 10.4-13 Three-feeder Clip 10-22

Fig. 10.4-14 Method 1 of Introducing Feeders into the Equipment Room 10-23

Fig. 10.4-15 Method 2 of Introducing Feeders into the Equipment Room 10-23

Fig. 10.6-1 Wrap the Waterproof Adhesive Tapes (1) 10-26

Fig. 10.6-2 Wrap the Waterproof Adhesive Tapes (2) 10-26

Fig. 10.6-3 Wrap the Waterproof Adhesive Tapes (3) 10-27

Fig. 11.2-1 Structure of the GPS Antenna Feeder System 11-2

Fig. 11.4-1 Stripping the GPS Coaxial Cable 11-3

Fig. 11.4-2 Welding the Pins of the GPS Connector 11-3

Fig. 11.4-3 Structure of the N-J7A Cable Assembly 11-4

Fig. 12.2-1 Panel of RFE Modules 12-5

Fig. 12.2-2 Structure of the HPA Front Panel 12-7

Fig. 12.2-3 Structure of the TRX Front Panel 12-9

Fig. 12.3-1 Connectors on the Rear of the Boards and Modules 12-11

Fig. 12.3-2 Front Panel of the Boards and Modules 12-12

Fig. 12.4-1 Slot Diagram of the BDS Plug-in Shelf 12-13

List of Tables

Table 2.1-1 DC Power Indexes for the Normal Operation of BTS 2-3

Table 2.1-2 Power Consumption Indexes for the Normal Operation of BTS 2-4

Table 2.2-1 Tools Needed..... 2-7

Table 2.2-2 Instruments Needed..... 2-8

Table 7.2-1 Front Panel Wiring of the Rack for the Single-carrier Single-sector BTS 7-6

Table 7.2-2 Front Panel Wiring of the Rack for the Single-carrier Two-sector BTS 7-9

Table 7.2-3 Front Panel Wiring of the Rack for the Single-carrier Three-sector BTS 7-13

Table 7.2-4 Front Panel Wiring of the Rack for the Two-carrier Three-sector BTS 7-16

Table 7.3-1 Wiring List of the Front Panel for the 1# Three-carrier BTS Cabinet..... 7-20

Table 7.3-2 Wiring List of the Front Panel for the 1# Four-carrier BTS Cabinet 7-26

Table 7.3-3 Wiring List of the Cables from 1# Multi-carrier BTS Cabinet to 2# Multi-carrier BTS Cabinet 7-28

Table 7.3-4 IDs of the LINK Directions..... 7-30

Table 7.4-1 100ΩT1 Cable Wiring and Signal Flow Direction..... 7-31

Table 7.4-1 Identifiers of the Location & Signal Flow Direction at Both Ends of the 100Ω Cable 7-33

Table 7.4-2 End B Braiding Pair Sequence of the 120 Ω T1 Conversion Cable..... 7-35

Table 9.2-1 Terminal Connection of the Smog Sensor Cable Connector..... 9-6

Table 9.2-2 Terminal Connection of the Temperature/Humidity Sensor Cable Connector..... 9-7

Table 10.4-1 Model and Dimensions of the Feed Window 10-14

Table 12.2-1 Description of the Interfaces on the RFE Panel 12-6

Table 12.2-2 Description of the Interfaces on the HPA Front Panel 12-8

Table 12.2-3 Description of the TRX RF Interfaces 12-10

1 Overview of BTS Installation

🕮 Summary

This part describes:

- Hardware installation flow of the BTS system;
- Installation precautions of the BTS system.

1.1 Overview

The integrated rack of ZXC10-BTSB comprises five layers each with an insertion box. From top down, they are the RFE, HPA, power, TRX layer and BDS layers, as shown in Fig. 1.1-1.

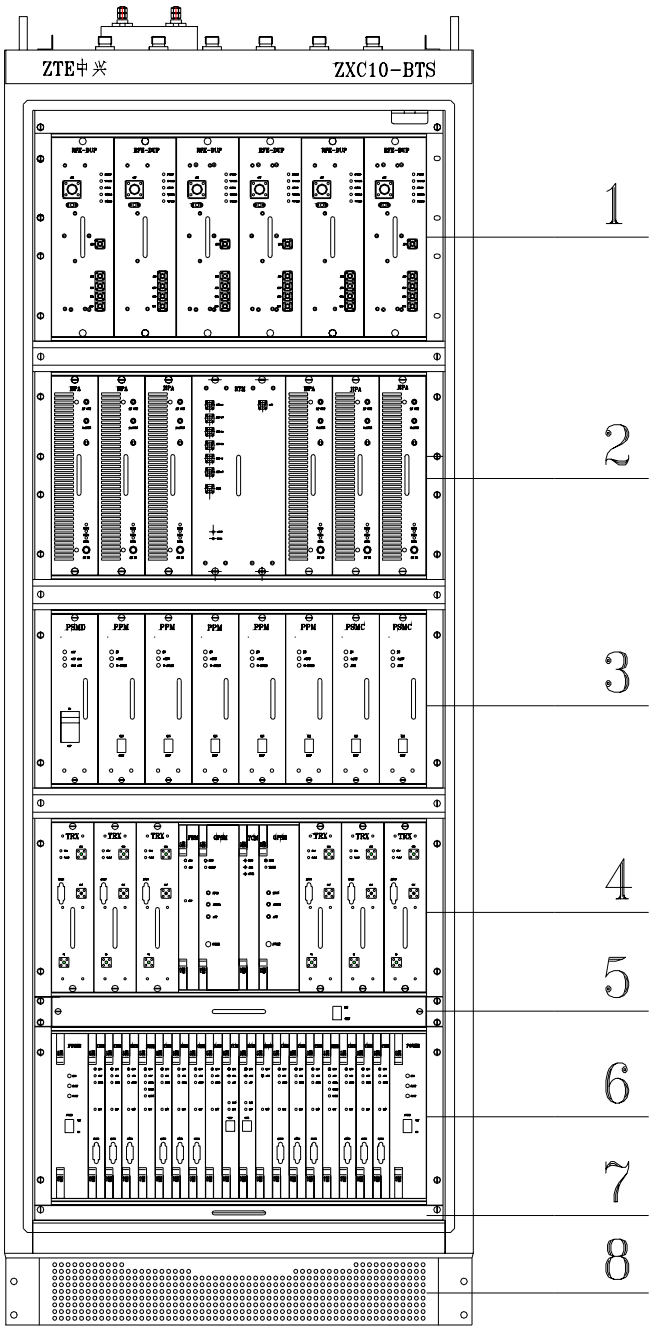

1. RFE plug-in shelf base 2. HPA plug-in shelf 3. PSMD/PSMC plug-in shelf 4. TRX plug-in shelf

5. Fan plug-in shelf 6. BDS plug-in shelf 7. Dust filtering plug-in shelf 8. Base

Fig. 1.1-1 Overall Structure of the BTSB I2 Rack with the BDS Plug-in Shelf

The installation of the BTS system comprises the following parts:

1. The installation of the BTS cabinet, including the rack installation, the internal cable installation, and the board installation and the DIP switch setting;
2. The installation of the power system to provide -48V operating power for the system;
3. The installation of the grounding system to provide the protection ground for the parts of the BTS equipment;
4. The installation of the antenna system, including the antenna positioning and installation, jumper installation, feeder installation, and antenna feeder system check and test;
5. The installation of the GPS system, including the installation of the GPS and the feeder;
6. The installation of the trunk cable, including the connection of the cables and the preparation of the connectors;
7. The installation of the monitoring system, including the installation of the temperature/humidity sensor and the environment sensor.

BTS system installation is shown in Fig. 1.1-2.

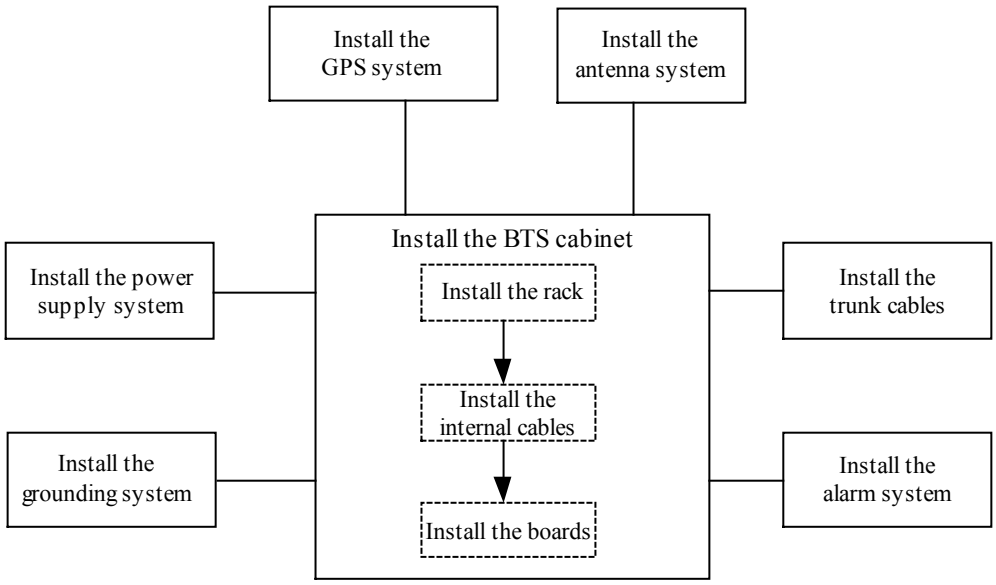

Fig. 1.1-2 Schematic Diagram of the BTS Equipment Installation

1.2 Hardware Installation Flow

The normal operation of the ZXC10 BTSB I28A equipment is closely related to the quality of the installation engineering. The equipment must be installed in a systematic and standardized way, which helps to remove the equipment stability problems caused by improper installation and improve the reliability of the system.

This manual focuses on the step-by-step installation method and procedure of the BTS and its parts. It provides details to enable users to finish the equipment installation.

The indoor installation of the ZXC10-BTS focuses on the rack installation, the indoor cable preparation and routing. Please follow carefully the steps below:

1. Fix the rack base to the rack;
2. Position the rack;
3. Mark and drill holes for bolts;
4. Fix the cabinet;
5. Install the power cable on the rack top;
6. Install the temperature and humidity sensor on the set top;
7. Install the T1 cable;
8. Install boards and modules inside the rack;
9. Connect the RF cable at the rack front.

The detailed hardware installation flow of the BTS system is as shown in Fig. 1.2-1. This manual describes the specific installation procedure by chapters according to this flow.

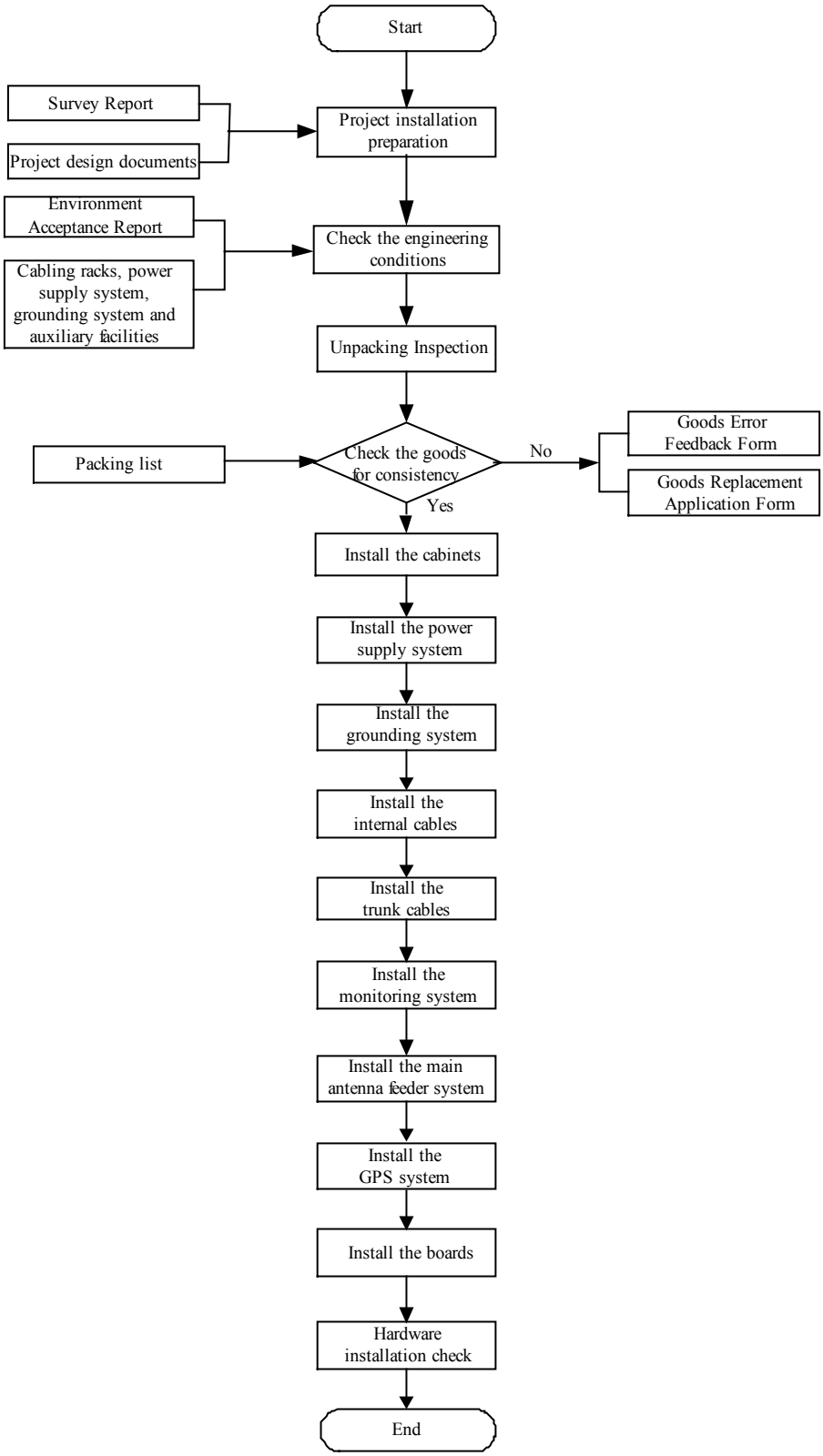

Fig. 1.2-1 Hardware Installation Flow

1.3 Precautions

Precautions for the BTS hardware installation:

1. Take careful precautions for the safety of yourself and the equipment during the installation;
2. Avoid hot plugging/unplugging during module installation;
3. Never install the antenna feeder system in case of lightning;
4. Check whether the lightning arrester is in proper contact before the thunderstorm season every year. In case any lightning arrester is damaged, replace it immediately;
5. Lock the cabinet door in time when the cabinet is installed.

2 Installation Preparation

🕮 Summary

This part describes:

- Environment check prior to the BTS installation;
- Tool and instrument preparation prior to the BTS installation;
- Technical document preparation prior to the BTS installation.

2.1 Installation Environment Inspection

Conduct the environment inspection prior to the installation. The basic inspection items are as follows:

Before the project installation, the customer should prepare the equipment room, power supply and grounding cable, and provide necessary facilities for the project implementation. The area and height of the equipment room should satisfy the requirements of the equipment layout. Otherwise, reconstructions are required to eliminate the hidden dangers in the installation, operation and maintenance of the equipment.

2.1.1 Inspection of the Equipment Room Building

The items for the equipment room building inspection are as follows:

1. The civil engineering of the equipment room and corridor has been completed, and the wall is fully dry.
2. The height and width of the doors in the equipment room should not cause any inconvenience for transporting the equipment. Usually, the height of the main doors in the equipment room should be no less than 2.2 meters, and the width should be no less than 1 meter. The net height of the equipment room should be

no less than 3 meters. The equipment room should have a sufficient area for the equipment with extra free space. For ease of operation and maintenance of the equipment, the space gap for opening the front door should be no less than 1 meter, and the space gap at the rack rear should be no less than 0.8 meter.

3. The equipment room floor can bear the weight over 450kg/m^2;
4. The wall and ceiling of the equipment room should not chalk or peel off and should be free of dust accumulation. Fire-retardant materials should be used for decoration.
5. The shock-proof design of the equipment room should be one degree higher than the local anti-seismic requirements. Generally, the equipment room should be able to bear the earthquake of 7 on the Ritcher Scale. Otherwise, shock-proof reinforcement measures must be adopted for the equipment.
6. Air-conditioning facilities should be provided to maintain desired temperature and humidity in the equipment room.
7. Lightning screen or lightning arrester should be installed for the places in the equipment room vulnerable to the lightning. Outdoor metal pipelines should be grounded when led into the equipment room.

2.1.2 Inspection of the Indoor Environment

The inspection of the indoor equipment room environment covers the inspection of humidity, temperature, air pressure, antistatic protection, anti-interference requirement, air conditioning, ventilation, dust proof, rodent proof, fire protection, lighting, and drainage facilities.

1. Requirements for the ambient temperature and humidity

   Operating temperature: -5°C ~ +55°C

   Relative humidity: 15% ~ 93%.

2. Requirements for the equipment room floor

   The level difference per square meter of the floor should not be more than 2mm.

3. Cleanness

   Cleanness is related to the amount of dust and harmful gases in the air. The equipment room should meet the following cleanness requirements:

- There should be no explosive, conductive, magnetic or corrosive dust in the equipment room.
- The dust (diameter more than 5μm) density should be no more than 3×10^4 granules/m^3.
- No corrosive metal or gas that is harmful to insulations, such as SO_2, NH_3. in the equipment rooms.
- The equipment room should be always kept clean, with the doors and windows properly sealed.

4. Lighting

   The equipment room should be equipped with three types of lighting facilities: common lighting, guaranteed lighting and emergency lighting.

5. Fire-proof requirements

   The paint and decoration materials in the equipment room should be fire-proof. The cabling holes through the wall should be filled with fire-retardant materials. Fire-fighting devices should be equipped at the appropriate positions.

2.1.3 Inspection of Power Supply

Inspect that the power supply of the equipment room meets the power consumption requirement of the BTS.

2.1.3.1 Power Supply Range

Please see Table 2.1-1 for the DC power Indexes for the normal operation of ZXC10 BTSB I28A (supporting 24V DC power).

Table 2.1-1 DC Power Indexes for the Normal Operation of BTS

Item	DC Power
Nominal value	-48V
Voltage fluctuation range	-40~-57V

2.1.3.2 Power Consumption

Power supply and power consumption: The power consumption of ZC10-BTS refers to the overall power consumption when the operating voltage is -48V and the output power of each power amplifier is 20W, as shown Table 2.1-2.

Table 2.1-2 Power Consumption Indexes for the Normal Operation of BTS

Configuration	Operating Voltage	Power Consumption	Remarks
Single-carrier single-sector	-48V	850W	
Single-carrier two-sector	-48V	1150W	
Single-carrier three-sector	-48V	1400W	
Two-carrier single-sector	-48V	1100W	
Two-carrier two-sector	-48V	1650W	
Two-carrier three-sector	-48V	2200W	
Three-carrier three-sector	-48V	3600W	Total power consumption of two racks
Four-carrier three-sector	-48V	4400W	Total power consumption of two racks

2.1.4 Electromagnetic Radiation Protection Requirements

GB8702-88, "Electromagnetic Radiation Protection Regulations" of the People's Republic of China specifies:

1. Public radiation: For twenty-four hours in a day, the average power density of electromagnetic radiation (for six consecutive minutes) is < 0.4W/m^2 (30MHz ~ 3000MHz).
2. Professional radiation: For eight work hours in a day, the average power density of electromagnetic radiation (for six consecutive minutes) is < 2W/m^2 (30MHz ~ 3000MHz).

2.1.5 Grounding Inspection

The grounding regulations and resistance requirements (including the lightning protection requirements) are as follows:

The communication equipment should be well grounded for reliable operation. Good grounding ensures lightning protection and interference resistance. The grounding

cables in the equipment room should be routed in a radiating or flat way. Three independent grounding cables should be used. The protection ground of the DC power distribution system, the work ground of the power system and the lightning protection ground.

The grounding resistance of the BTS should be less than 5Ω. The engineering requires the grounding resistance to be the smallest possible. The magnitude of grounding resistance is affected by grounding post resistance, leading wire resistance, contact resistance between the grounding post and soil, and soil type of. The greatest impact on grounding resistance comes from soil type. In areas with poor soil conditions, some resistance-reducing agent (such as propenamide) may be added around the grounding stake to meet the requirements. Changes in temperature will also cause variations in resistance. In cold areas, the impact of temperature on the resistance may be reduced by burying the stake deeply into the ground. Grounding stakes are usually made of galvanized materials, in proper size. The connection cables from the grounding stake to the equipment should adopt copper-sheathed wires of good conductivity (core wire section area less than $50mm^2$, and length as short as possible). If necessary, anti-erosion protection can be provided to the grounding connection parts to guarantee low-resistance connection.

The working ground refers to the loop formed through the earth to transmit energy and information. For instance, the 3-phase AC power supply neutral line ground and the positive battery ground are both working grounds. This grounding approach can resist electromagnetic interference and crosstalk.

The protection ground refers to the grounding of the metal shell of the power supply equipment to prevent hazards to human body due to power leakage.

In addition, the ground for lightning protection should be used to prevent lightning strike from damaging the equipment and to protect the safety of lives and properties.

2.1.6 Inspection of the Installation Environment for the Outdoor Antenna Feeder System

1. Check whether the height and the size of the feeder window comply with the requirements of the BTS equipment and the engineering design drawing.
2. Check the height, weight bearing and grounding of the outdoor cabling rack against the engineering design.

3. Check the height, weight bearing and grounding of the indoor cabling rack against the engineering design.
4. Check the height, diameter, weight bearing, wind resistance, grounding, lightning protection and position of the antenna embracing pole of the BTS on the roof. Make sure they comply with the BTS equipment requirements and the engineering design drawing.
5. Check the height, diameter, weight bearing, wind resistance, grounding, lightning protection and position of the antenna embracing pole of the BTS on the iron tower. Make sure they comply with the BTS equipment requirements and the engineering design drawing.

2.1.7 Safety Inspection

Appropriate fire-fighting devices should be equipped in the equipment room, such as a certain quantity of portable powder fire-extinguishers. As for the large equipment room, a complete set of automatic fire-fighting system should be equipped. No inflammable or explosive articles should be placed in the equipment room.

1. Storage of flammable and explosive materials in the equipment room is strictly prohibited and necessary firefighting equipment must be installed.
2. Different outlets in the equipment room should bear noticeable marks, and dynamic electricity and lighting electricity should be noticeably differentiated.
3. The equipment room should be far from high-voltage power lines, strong magnetic fields, strong electric sparks, or other factors that may threaten the security of the equipment room.
4. Reserved holes in the floors should be covered with safety cover plates.
5. Proper lightning protection facilities should be in place before leading the power lines and transmission lines into the equipment room.

2.1.8 Inspection of Corollary Equipment

Inspect the following according to configuration requirements specified in the contract:

1. Check whether the external power supply and the power cable connecting the racks are ready;
2. Check whether the T1 cable connecting the BTS and the BSC is ready.

2.2 Preparation of Tools and Instruments

A number of tools and instruments are to be used during the BTS installation process. Prepare the tools and instruments as per Table 2.2-1 and Table 2.2-2.

Table 2.2-1 Tools Needed

Category	Name
Special tools	One feeder connector knife One wire skinner for 100Ω coaxial cables One crimping pliers for 100Ω coaxial cables One multi-functional crimping pliers One multimeter One SiteMaster VSWR tester Earth resistance tester
Concrete drilling tools	One electric percussion drill Several drill bits One cleaner One power terminal block (at least three 2-phase sockets and three 3-phase sockets, with the power capacity more than 15A)
General-purpose tools	Philips screwdrivers (4”, 6” and 8” each) Flathead screwdrivers (4”, 6” and 8” each) Adjustable wrenches (6”, 8”, 10” and 12” each) Dual-purpose spanners (17” and 19”) One set of socket wrench One 5kg nail hammer One 300W iron One 40W iron One roll of solder wire
Measurement tools	One 50m tape measure One 5m steel tape One 400mm level bar One angle meter One compass Level bar Plumb
Protection tools	Antistatic wrist strap Safety helmet, slip-proof glove

Category	Name
Small tools	One hacksaw (with several saw blades) One pair of sharp-nose pliers (8”) One pair of diagonal pliers (8”) One pair of slip joint pliers (8") One pair of vices (8”) One needle file set (medium sized) Tweezers One paintbrush One pair of scissors One hot blower One solder sucker One pair of hydraulic pliers Crowbar
Auxiliary tools	Pulley block Rope Ladder Forklift

Table 2.2-2 Instruments Needed

Instrument Name	Manufacturer
Spectrum analyzer (needed in some special cases)	HP
Base station tester	SITE MASTER
Test-purpose MS	Qualcomm
Compass	
Multimeter	
Field strength tester (needed in some special cases)	

2.3 Preparation of Technical Documents

The technical documents to be prepared before the commissioning of the equipment are as follows:

1. *Project Survey Report, BTS System Project Design and Engineering Drawing, and Environment Acceptance Report.*

   *The Project Survey Repo*rt should be completed by the engineering staff sent by the equipment supplier during the onsite survey. If engineering staff cannot

conduct the survey in time, he should entrust the equipment user to fill in the report and mail it back after the survey for the preparation of engineering materials.

The *BTS System Project Design and Engineering Drawing* should be completed by the design party entrusted by the equipment user, and its copy should be provided by the equipment user to the equipment supplier before equipment delivery.

The *Environment Acceptance Report* is used for the first engineering environment inspection during the project survey. If the environment is found to fail the inspection, the equipment user is requested to make improvement and solve the problem. The second environment inspection is conducted before the engineering starts.

2. *ZXC10 BTSB I28A (V1.0) cdma2000 System Base Transceiver Station Installation Manual*; *ZXC10 BTSB I28A (V1.0) cdma2000 System Base Transceiver Station Technical Manual; ZXC10 BTSB I28A (V1.0) cdma2000 System Base Transceiver Station Hardware Manual; ZXC10 BTSB I28A (V1.0) cdma2000 System Base Transceiver Station Maintenance Manual.*

3. Installation Acceptance Report and Test Acceptance Report.

   The *Installation Acceptance Report* and *Test Acceptance Report* are the engineering materials for acceptance after the BTS commissioning. They are provided by the equipment supplier to the equipment user at the time of delivery. They should be completed properly after the commissioning of the BTS.

3 Unpacking Inspection

🕮 Summary

This part describes:

- Unpacking of the BTS equipment;
- Inspection of the BTS equipment.

3.1 Checking the Goods against the Packing List

1. Check the Delivery Checklist of ZTE (H.K.) LIMITED.
2. Unpacking inspection is conducted by the Project Supervising Committee and representatives from the user. First, check the total number of goods, the intactness of the packing boxes, and check whether the arrival place is the actual installation place against the packing list number attached to the packing boxes;
3. If the goods are intact, unpack and inspect the goods. There should be a packing list in each box, and the engineering supervisor should check the goods against the packing list. The Unpacking Inspection Report is placed in the packing box numbered 1#. First open the 1# packing box and take out the Unpacking Inspection Report. Check the total number of the goods against the inspection list and record it for filing.
4. During the unpacking inspection process, if there is any short and wrong shipment or goods damage, you should contact the ZTE headquarters.
5. The packing boxes of ZTE comprise two types: wooden box and carton. Use different tools to open the boxes accordingly on the site.

Caution:

The ZXC10 BTSB I28A equipment is relatively expensive. During transportation, it should be well packaged, with clear waterproof and quake-resistant marks. Handle the equipment with care and protect it from sunshine and rain.

3.2 Unpacking the Wooden Box

3.2.1 Wooden Box Structure

The wooden boxes are generally used for packing heavy goods like rack.

The structure of the BTS rack packing box is as shown in Fig. 3.2-1.

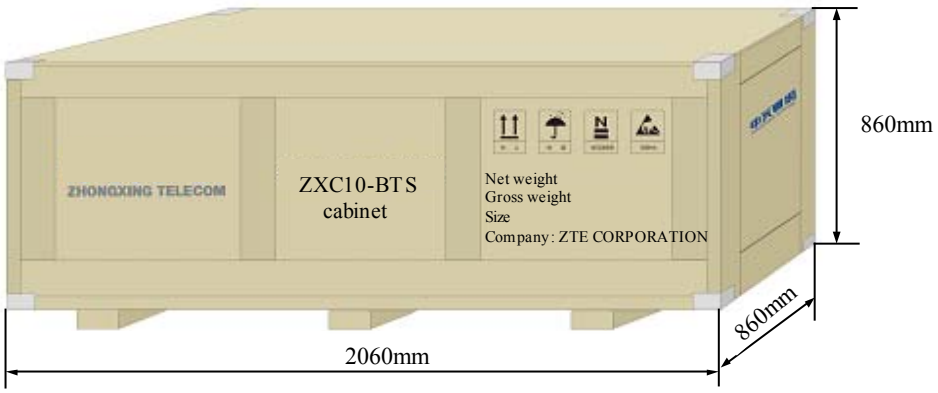

Fig. 3.2-1 Structure of the Wooden Box

3.2.2 Unpacking

1. Prepare tools such as nail hammer, pliers, flathead screwdrivers, and crowbar;
2. First skin the packing sheet iron. Insert a flat-tip screwdriver into the slit between the box and the front cover board to make it loose; then insert the crowbar to unclench the cover board.
3. Keep the box on end and the legs downward, and pull the rack out of the box. Make sure not to remove the antistatic bag of the rack before pulling the rack out.
4. Remove the packing adhesive tape of the rack.

Note: The BTS rack is equipped with casters for easy movement. However, you should control the moving direction with your hands during the move to avoid damage to the rack or emergencies.

3.2.3 Inspecting the Rack Outside View

Put the rack vertically on the solid ground. The rack should be erected upright without tilting. Visually there is no dent, bump, scratches, peel, bubbling, stains or other similar damaged signs. The captive screws should not be loose, missing or misplaced. The installation slots for plug-in shelves are intact and the slot guide rails are not missing, damaged or broken. All fittings and accessories required for rack installation are complete. The labels of installation slots are intact and eligible. The busbar, the exhaust fan and the installation positions are not damaged or deformed. There is no rack surface paint flake-off or scratches.

3.3 Unpacking the Carton

3.3.1 Carton

Caution:

1. Avoid taking any circuit board out of the antistatic bags during the unpacking and acceptance. Do not open the antistatic bags until the board is to be mounted into the rack. In addition, avoid damaging any antistatic bag and keep it for future use when storing spare boards and packing the faulty boards for repair.

2. When the equipment is moved from a colder and drier place to a hotter and damper place, wait for 30 minutes before unpacking the equipment. Otherwise, moisture may appear on the surface of the equipment and cause damage.

3. Properly recycle the desiccants lest children may eat them by accident. Cartons are generally used to pack circuit boards and terminal equipment.

The circuit boards are placed in the anti-static protective bags during transportation. Before unpacking the boards, take proper anti-static protective measures to avoid damages. In addition, attention should be paid to the ambient temperature. Usually some desiccant is placed in the anti-static protective bag to absorb moisture and keep the bag dry.

The packing box of a module is shown in Fig. 3.3-1.

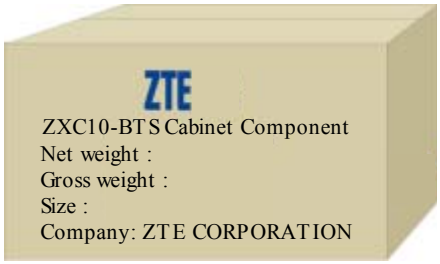

Fig. 3.3-1 Packing Box of the Module

3.3.2 Unpacking

Take the following steps to unpack a carton:

1. Use the diagonal pliers to cut the straps.
2. Use a paper knife to cut the adhesive tape along the slits on the box covers. Note that the cut should not be too deep and damage the goods inside.
3. Count the quantity and types of boards inside the carton against the packing list attached and sign for the acceptance with the customer on site.

3.3.3 Inspecting the Boards

Check the boards against the delivery list and contact the equipment supplier in time if any incompliance is found.

3.4 Goods Acceptance and Handover

After goods acceptance both parties should sign the *Unpacking Inspection Report* for confirmation, after which the goods should be handed over to the customer if they are to be kept by the customer after acceptance as per the contract terms. Each party should hold a copy of the *Unpacking Inspection Report* and the Project Supervisor should feedback the Acceptance Conclusion of the Report to be archived by the equipment supplier.

4 Installing the Cabinets

🕮 Summary

This part describes:

- External structure of the BTS cabinet;
- Installation procedure of a single BTS cabinet;
- Arrangement of the BTS cabinets;
- Connection and fixation between BTS cabinets;
- Standard of installing the BTS cabinets.

4.1 External Structure of the BTS Cabinet

At present there is only one type of BTS cabinet: Welded cabinet. The BTS rack has a fully-closed shielded structure, as shown in Fig. 4.1-1.

Dimensions of the rack: 700mm (W) × 600mm (D) × 1800mm (H).

Dimensions of the base: 700mm (W) × 600mm (D) × 100 mm (H).

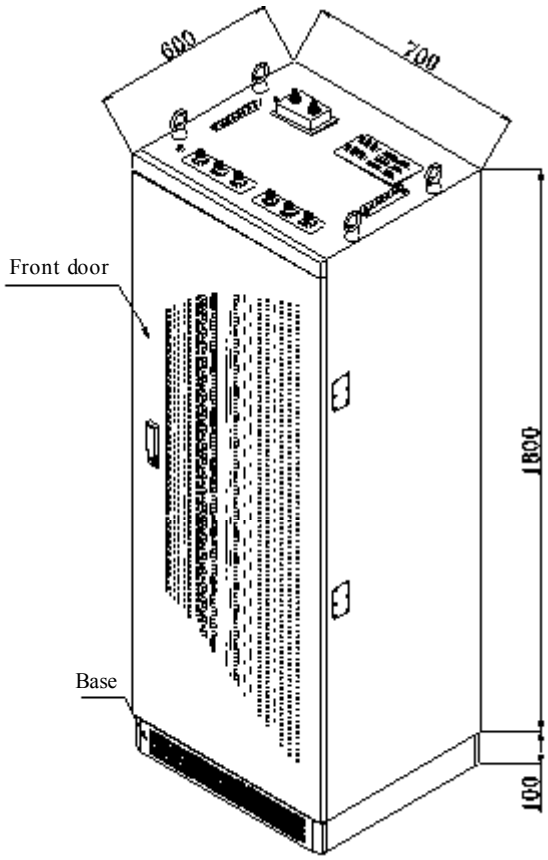

Fig. 4.1-1 Outside View and Dimensions of the Rack

4.2 Cabinet Layout

The principles of rack layout should be observed in designing the rack installation positions, since the installation of the ZXC10 BTSB I28A rack needs to satisfy the heat dissipation and maintenance space requirements. Fig. 4.2-1 shows how to arrange the equipment inside the equipment room.

1. The rack arrangement should fully take into account the direction from the feeder to the BTS. The feeder should be as short as possible provided that its curvature is guaranteed.
2. At least 1m passage should be reserved before the rack.
3. At least 0.8m space should be reserved after the rack for maintenance.
4. Keep a rack position at one side of the rack for future capacity expansion, and keep the other side at least 0.1m away from the wall.

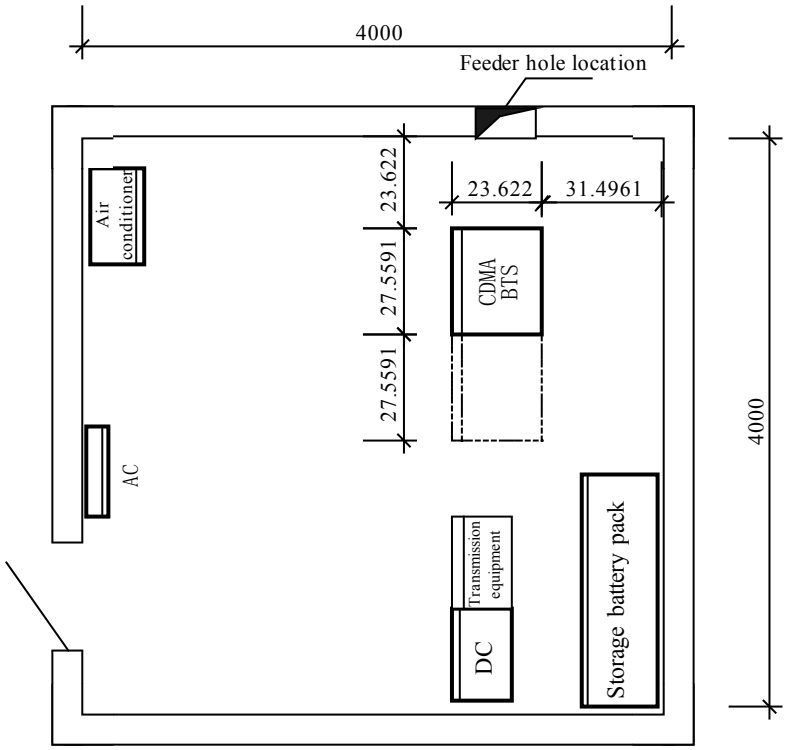

Fig. 4.2-1 Layout of Equipment inside the ZXC10 BTSB I28A Equipment Room

4.3 Installing a Single BTS Cabinet

4.3.1 Installation Flow of a Single Cabinet

The base installation mode is adopted for the BTS cabinet, that is, the cabinet is installed on the adjustable base provided by ZTE.

When there is no antistatic floor available in the equipment room, the base and the rack can be mounted directly on the ground. If there is antistatic floor in the equipment room, angle-steel supports should be prepared by the manufacturers according to the mounting hole location drawing of the BTS rack and the floor height measured. The base and rack are then mounted on the support in the same way as fixing the rack onto the cement ground.

Below is the cabinet installation flow of the ZXC10 BTSB I28A, which should to be strictly followed.

1. Assemble the cabinet base.
2. Marking/positioning.

3. Drill holes and fix the expansion bolts.
4. Fix the cabinet.
5. Check the cabinet installation.
6. Install the bottom baffles of the cabinet.

4.3.2 Installation Procedure of a Single Cabinet

Below is the procedure of installing a single cabinet on the base.

4.3.2.1 Base Structure

Assemble the rack base:

1. Dimensions of the base

   Each base is provided with two supports and four baffle plates. Its dimensions are:

   700mm (W) × 600mm (D) × 100mm (H).

2. Fig. 4.3-1 shows the assembly of the base and its components.

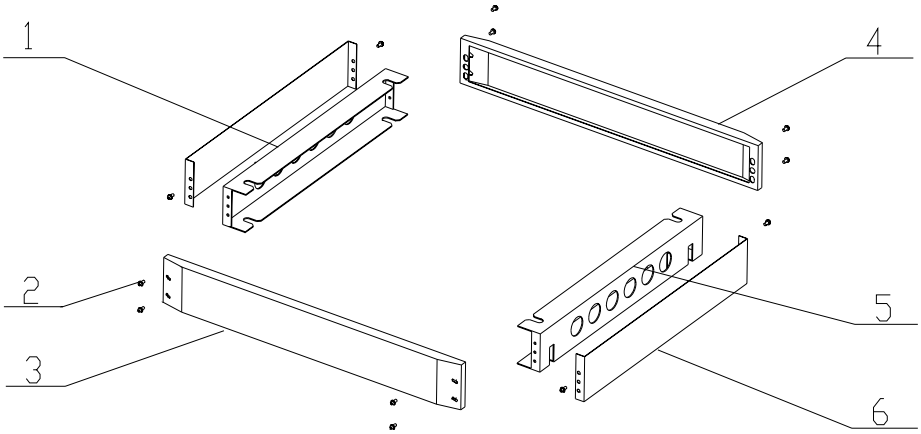

1. Support B 2. Screw M5×16 3. Front baffle plate 4. Rear baffle plate 5. Support A 6. Side plate

Fig. 4.3-1 Assembly of the BTS Rack Base

4.3.2.2 Fixing the Base

As shown in Fig. 4.3-2, fix the base and the rack in the following procedure:

1. Remove the four legs at the bottom of the rack and add a washer to the inner side of the bolt and nut of each leg, screw the legs back in position and adjust the leg height of the rack to about 50mm evenly.
2. Lean the rack slight towards one side, insert one support of the base into the gap between two washers on the legs of the rack, screw tight the two nuts of the legs and then fix the support at one side of the base with the rack.
3. Lean the rack slightly towards the other side and perform the same operations as above to fix the support of the base at the other side with the rack.
4. Pay attention to the upper and lower positions of the U-shaped fixing holes on the base.

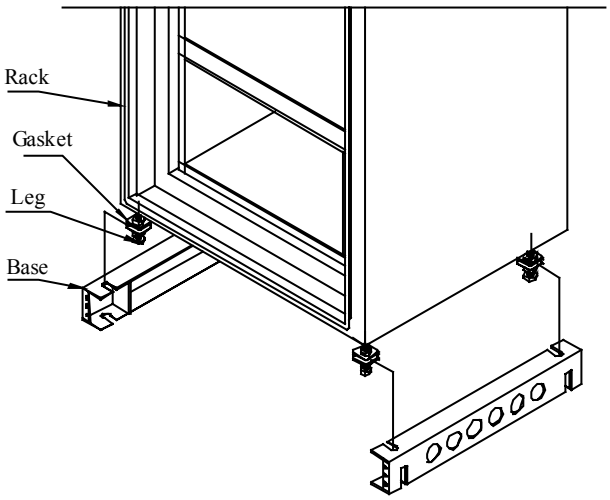

Fig. 4.3-2 Fixing the Base with the Rack

4.3.2.3 Positioning the Base

First follow the installation engineering design drawing to determine the installation position of the rack in the equipment room. If there is no such drawing, the rack must be positioned with the permission of the user. You may mark on the cement floor according to the dimensions as shown in Fig. 4.3-3, or place the rack in the preset place, and mark the mounting holes.

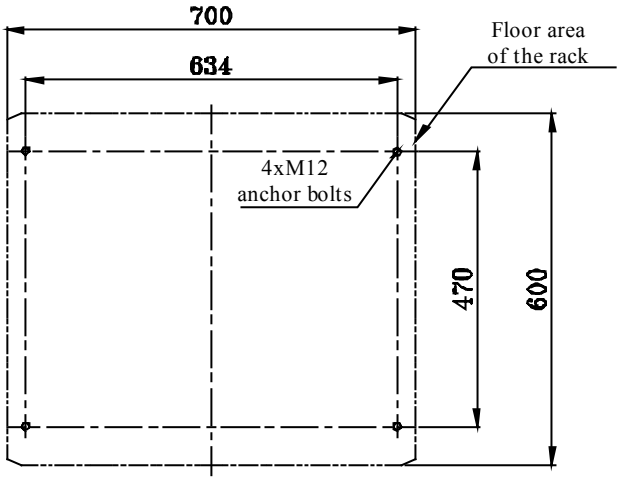

Fig. 4.3-3 Installation Holes of the BTS Rack

Drill holes by taking the following steps:

1. Before drilling, use a sample drill bit to drill a hole at the hole position to help position the right drill bit. If you use the M12 expansion bolt, you should use the Φ14 percussion drill bit.
2. The hole depth is the tube length of the expansion bolt plus the length of the bit. After the hole depth is determined, fix the locating rod of the percussion drill;
3. When drilling, it is recommended that one person drill the holes and the other clean dust with a cleaner;
4. Put an expansion bolt in the drilled hole and hammer it in with a rubber hammer. Fix the bolt with its nut and then remove the nut to get ready for the rack installation. Make sure that the expansion bolt must be securely fixed. If not, the rack cannot be securely installed.

4.3.2.4 Fixing the Cabinet

Fix the cabinet as follows:

Move the rack mounted with a base gently to the installation position, push the U-shaped fixing holes on the base into the bolts, and fix the four corners of the rack to the four bolts with flat washers, spring washers and nuts, as shown in Fig. 4.3-4. Adjust the legs to keep the rack vertical.

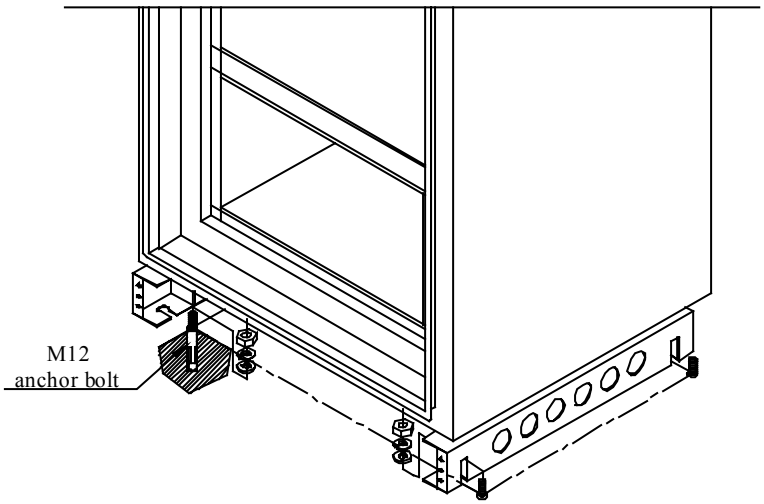

Fig. 4.3-4 Fixing the Rack

4.3.2.5 Rack Installation Check

The rack installation check covers the following aspects:

1. Levelness: Since the floor may be uneven, it is necessary to check the levelness of the rack after installation. Put the level bar on the level section of the rack front and side to see if the level vial is centered. If not, it shows the rack is not installed horizontally. In that case, adjust the legs between the rack and the base at the four corners of the rack bottom. In the case the floor is uneven and there is big error, use gaskets to adjust the rack levelness;
2. Verticality: Check the rack verticality with a plumb. The verticality error between the rack bottom and the rack top should be less than 3mm;
3. Stability: The rack should stand still when you push the upper part of the rack with your hands;
4. Check the corners in the rack. There should be no metallic scraps or wires left during the installation, and the rack interior should be clean without any sundries;
5. All screws are tightened with flat washer and spring washers installed in the correct sequence.

4.3.2.6 Installing the Baffle Plate at the Rack Bottom

After the rack is installed, fix the baffle plates on the four sides of the rack bottom. When installing the baffle plates, install the plates on both sides first and then the plates on the front and the rear, as shown in Fig. 4.3-5.

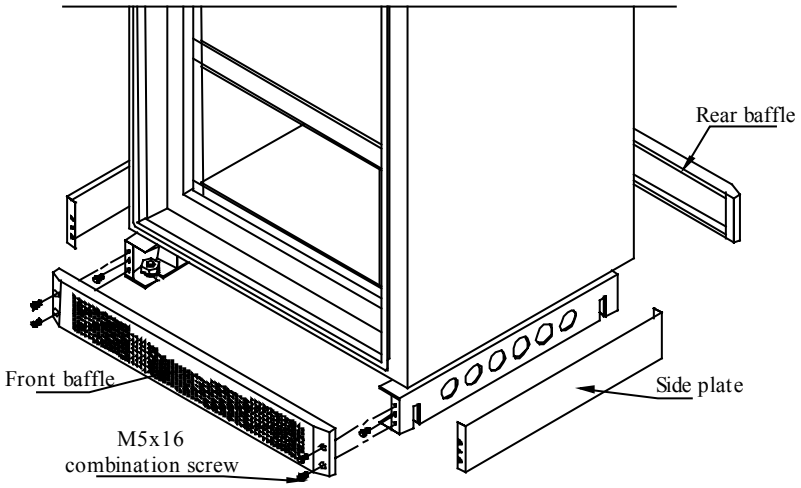

Fig. 4.3-5 Installing the Rack Baffle Plates

4.3.2.7 Insulation Test

Conduct the grounding test of the cabinet according to the requirements specified in Section 2.1.5.

4.4 Connecting and Fixing Multiple Cabinets

This section describes the installation and fixation of multiple cabinets for the multi-carrier BTS.

When two cabinets are required to be closely placed to each other and keep flush, remove the cable hole cover plates on the cabinet side panels that contact with each other for the purpose of cabling, as shown in Fig. 4.4-1.

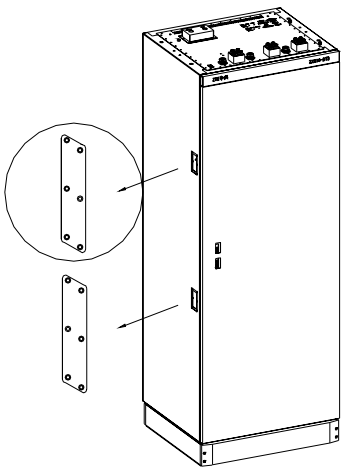

Fig. 4.4-1 Enlarged View of the Cable Hole Cover Plate

Next, connect and fix the two cabinets with the connecting bars on the set top, as shown in Fig. 4.4-2.

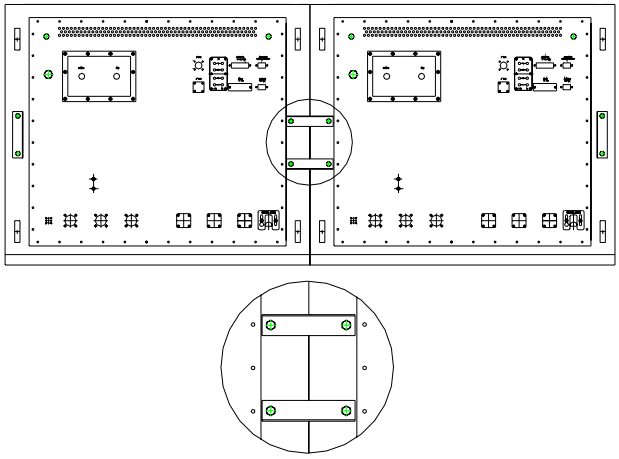

Fig. 4.4-2 Assembling the Connecting Bars on the Cabinet Top

When two cabinets are required but they are not to be closely placed to each other, use the upper cabling mode. For the detailed installation method, please refer to the assembly diagram of multiple cabinets shown in Fig. 4.4-3.

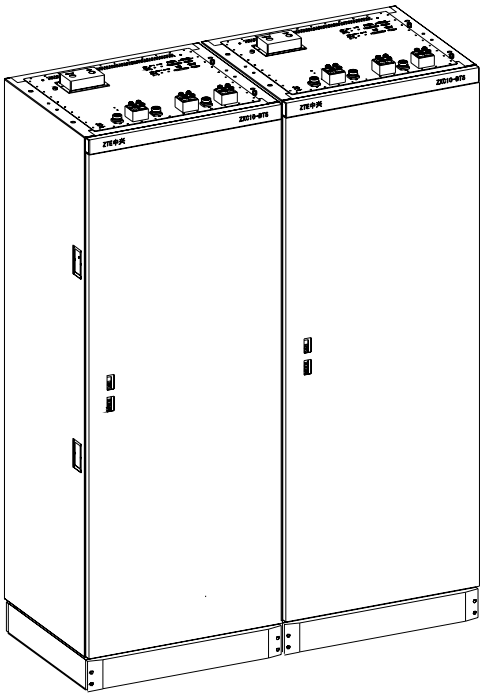

Fig. 4.4-3 Effect Diagram of Two Cabinets Installed

4.5 Cabinet Installation Requirements

The installation of the ZXC10 BTSB I28A rack should satisfy the requirements for equipment heat dissipation and maintenance space. Therefore, the rack installation position design should meet the rack layout requirements. The cabinet installation criteria are as follows:

1. The layout of the cabinets should take into consideration the direction from the feeder to the BTS. The feeder should meet the bending radian requirement and be as short as possible.
2. There must be an aisle no less than 1m wide in the cabinet front.
3. There must be maintenance room no less than 0.8m in the cabinet rear.
4. A rack space should be reserved at one side of the cabinet for future system expansion, and the other side is away from the wall at least 0.1m.
5. When the system is expanded to three carriers and four carriers, two cabinets are required. If they are placed side by side, it is necessary to remove the cable hole cover plates on the side panel of the cabinets that contact each other to ease the

cabinet internal cabling. Two angle supports should be used on the set top to connect the two cabinets firmly.

6. When the system is expanded to three carriers and four carriers, two cabinets are required. If they are not placed close to each other, the upward cabling mode should be adopted. The specific cabling should comply with the installation engineering standards.

5 Power Supply System Installation

Summary:

- Power cables of BTSB
- Installation method of the BTSB power supply
- Installation procedure of the BTSB power supply

5.1 Introduction to Power Cables

The DC power supply cables consist of the -48V cable (black), grounding cable (blue) and protection grounding cable (yellow green). The connector of the BDS power cable on BTSB is shown in Fig. 5.1-1.

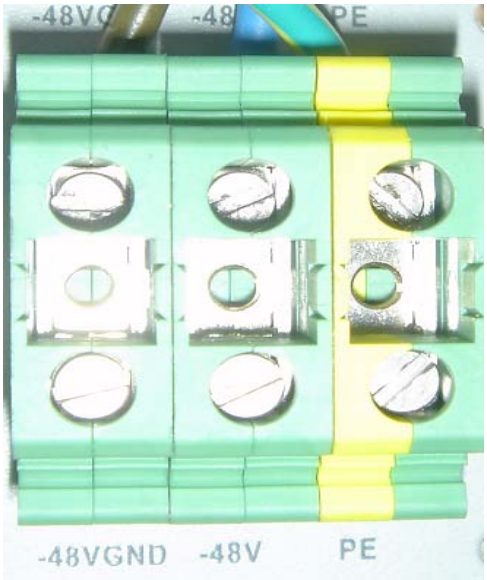

Fig. 5.1-1 BDS Power Cable Installation on BTSB

The diameter of the main power cable should be calculated by the actual capacity. The specifications of the three commonly used BTSB power cables are:

1. Black with the cross section area as 25 mm^2 (working grounding cable).

2. Blue with the cross section area as 25 mm^2 in section area (-48V).
3. Yellow green with the cross section area as 35 mm^2 (protection grounding cable).

5.2 Installation Flow of Power Cables

The power cable installation flow is shown in Fig. 5.2-1.

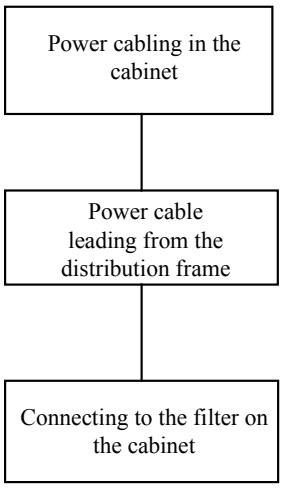

Fig. 5.2-1 Installation Flow of RFS Power

5.3 Cable Installation Procedure

The power supply is led into the filters by the power cables, distributed to the busbars on the two sides of the cabinet by PD, and then led to the backplane of each plug-in box by the busbars, As show Fig. 5.3-1.

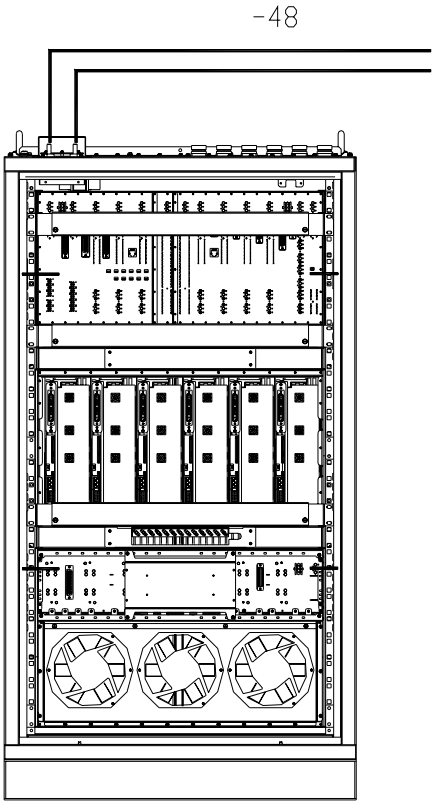

Fig. 5.3-1 RFS Power Cabling

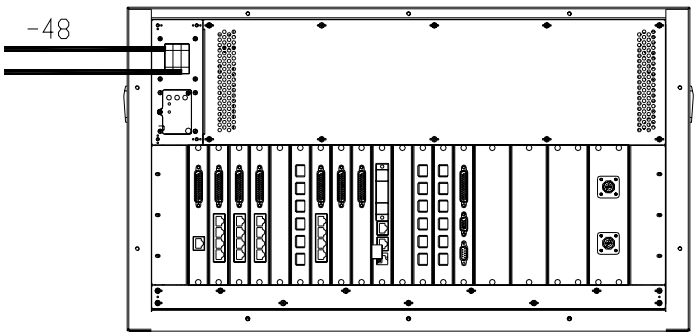

Fig. 5.3-2 BDS Power Cabling

The connection between the busbar and backplane through the -48V power cable is shown in Fig. 5.3-3.

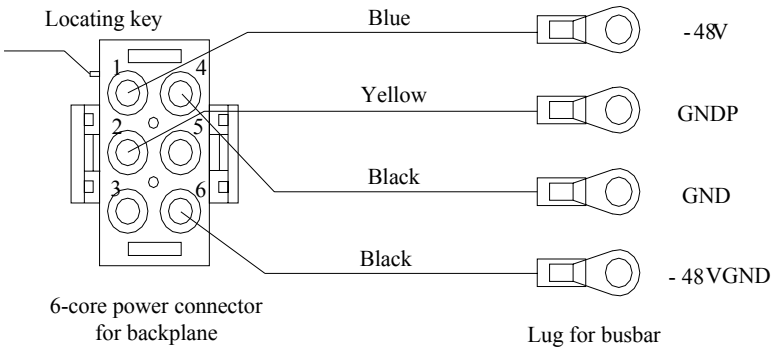

Fig. 5.3-3 Connection between Busbar and Backplane

End B of the power cable on the busbar usually has been connected before delivery. If the backplane of the plug-in box has been installed, the End A of the cable has been connected to the backplane. Only when the equipment capacity is to be expanded or the backplane is to be replaced, the power cables need to be connected on site.

1. Connection between the DC distribution cabinet and the DC distribution panel

   The PE grounding bar of the DC distribution cabinet must be reliably connected to the protective grounding bar provided by the carrier through the yellow/green wire with the copper core, plastic insulation layer and the same diameter as the power cable.

   The two -48V terminal blocks of the DC distribution cabinet should be reliably connected to the -48V DC negative busbars of the active/standby DC distribution panels respectively. The GND terminal blocks of the DC distribution cabinet should be reliably connected to the -48V DC positive busbars of the active/standby DC distribution panels respectively.

   If there is no DC distribution cabinet, PE wiring terminals of the cabinets must be reliably connected with the protective terminal blocks provided by the carrier. The power cables led out from -48 V and GND wiring terminals of each cabinet are directly connected to the -48V DC negative busbar and -48V DC positive busbar of the DC distribution panel.

2. Connection between the DC distribution cabinet and the cabinet

   Connect one end of the -48V power cable (blue, 16 mm2) to the -48V wiring terminal on the filter of the cabinet, and the other end to the -48V busbar of the DC distribution cabinet.

Connect one end of the -48V grounding cable (black, 16 mm2) to the GND wiring terminal on the filter of the cabinet, and the other end to the GND busbar of the DC distribution cabinet.

Connect the Protection Earth wire (PE) (yellow green, 25 mm2): one end is connected to the PE wiring terminal on the P power supply of the cabinet, and the other end to the PE busbar of the DC distribution cabinet.

3. Intra-module cabinet cascading

In the same module, the GND wiring terminals of each cabinet should be connected with each other via a shorted cable.

4. Precautions for connecting power cables

While fixing the lug at one end of the DC distribution frame, add the flat washer and spring washer to make sure that the lug is reliably fixed and that the cable and wiring bar are in good contact to minimize the contact resistance. For details, see Fig. 5.3-4.

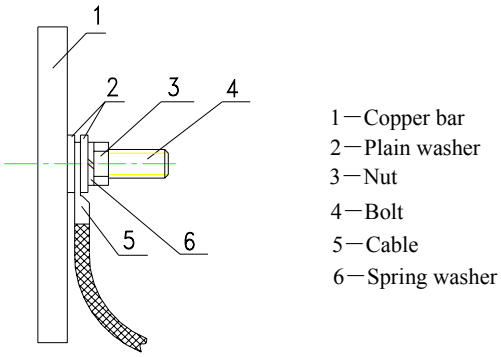

Fig. 5.3-4 Connecting Power Cable (1)

When installing lugs, if two or more cables need to be installed on one wiring post, the lugs should be crossed or installed in a back-to-back way, instead of being overlapped. If they must be overlapped, they should be bent into 45° or 90° before installation. Note that the big lug should be put under the small one. It is recommended to adopt this method in all the places where the lugs need to be installed. For details, see Fig. 5.3-5.

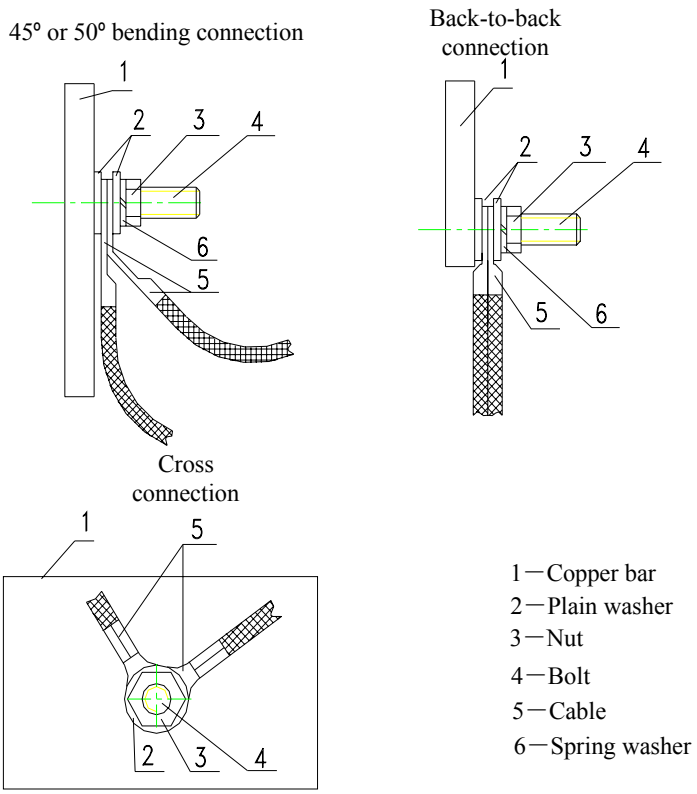

Fig. 5.3-5 Connecting Power Cable (2)

6 Installing the Grounding System

🕮 Summary

This part describes:

- Installation method of the BTS grounding system;
- Installation procedure of the BTS grounding system.

6.1 Overview of the BTS Grounding System

The purpose of grounding is to ensure the safety of human body and equipment and to improve the capability of the equipment to resist electromagnetic interference.

The grounding system consists of indoor part, outdoor part and underground ground grid of the building.

As to the engineering, the user is responsible for the basic ground grid construction of the grounding system, the grounding engineering of the iron tower and the building, and the provision of the connecting point for the indoor and the outdoor grounding copper bars to connect the ground grid via separate 50mm^2 wires, as shown in Fig. 6.1-1.

The wire of the indoor rack PGND (protection ground) is connected to the indoor grounding copper bar, as shown in Fig. 6.1-1.

The wire of the BTS rack –48VGND (working ground) is connected to the working ground terminal of the BTS DC power rack.

To ground the lightning arrester, connect it to the outdoor grounding copper bar with a wire. And to ground the feeder, connect each feeder to the outdoor grounding copper bar through a grounding clip before it enters the equipment room, as shown in Fig. 6.1-1.

This section describes the grounding of the BTS equipment and the installation of the grounding device accessories required for the BTS installation. It covers the

installation of the grounding copper bar, the feeder grounding clip and the lightning arrester.

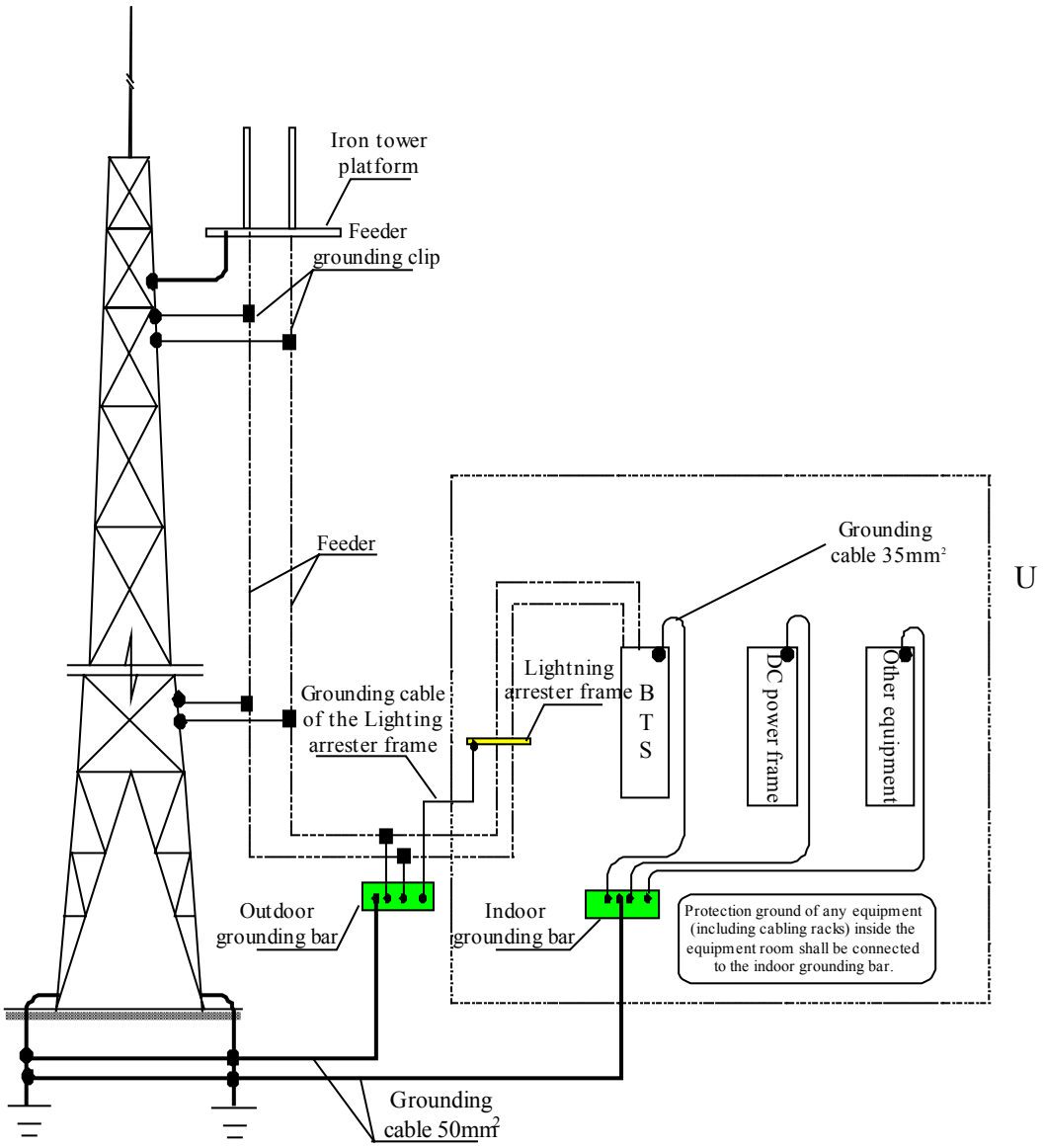

Fig. 6.1-1 Wiring for the BTS Ground

6.2 Installing the BTS Grounding System

6.2.1 Installing the Outdoor Grounding Copper Bar

The outdoor grounding copper bar is used for lightning protection grounding. It is usually installed on the wall outside the feeder window. The best place for it is right

under the feeder window or on the rainproof wall of the feeder well on the roof top. In principle, it is better to put it close to the feeder window.

During the practical installation, first determine the installation position of the grounding copper bar by following the engineering design drawing, and then install the grounding copper bar on the wall with the expansion bolts. See Fig. 6.2-1 for the structure of the grounding copper bar.

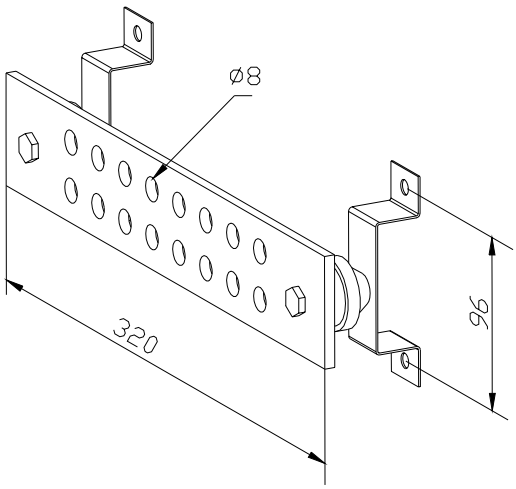

Fig. 6.2-1 Profile of the Grounding Copper Bar

6.2.2 Installing the Feeder Grounding Clip

Caution:

No installation of grounding clip should be performed in case of any lightning strike, lest bodily injury may be incurred.

When installing the grounding clip, keep the feeder at the joint of the grounding clip and the feeder straight.

6.2.2.1 Grounding Principles of Main Feeders

1. Usually, each main feeder should be grounded with grounding clips at least at three positions: on the tower platform, at the place where the main feeder leaves the tower for the outdoor cabling rack, and before the cable enters the equipment room. When the main feeder is over 60m, grounding clips should be added in the middle of it. Generally, a grounding clip is installed on the feeder every 20m.

2. The antenna feeder system, antenna support and new cabling rack installed on the roof top should be welded to the lightning protection grid of the building. The feeder should also be grounded at three positions: where it leaves the antenna embracing pole, where it leaves the roof top, and where it enters the equipment room.

3. When the main feeder enters the equipment room from the roof top along the wall, the outdoor cabling ladder provided by the network operator must be grounded. If not, urge the network operator to finish it as soon as possible.

6.2.2.2 Installing the Grounding Clip

1. Prepare the tools: Paper cutter, flathead screwdrivers, wrench and sharp-nose pliers.

2. Select a proper installation position for the grounding clip. And cut open the sheath of the 7/8" feeder to the size of the grounding clip. The structure of the grounding clip is as shown in Fig. 6.2-2

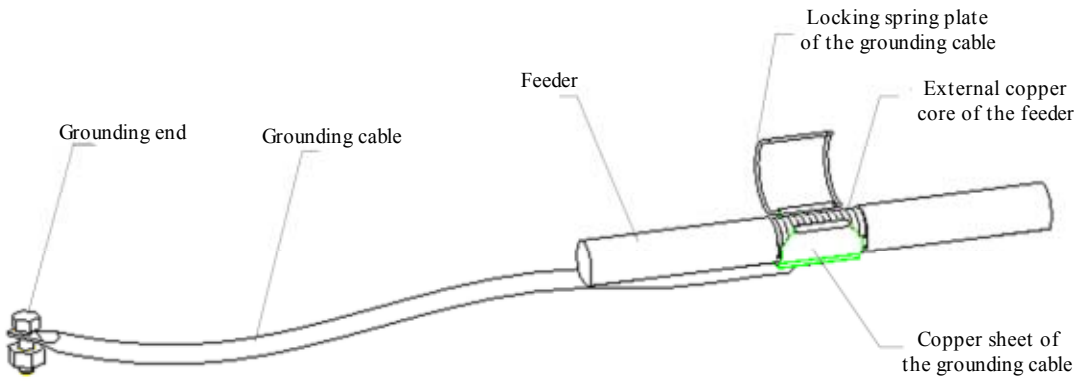

Fig. 6.2-2 Structure of the Grounding Clip

3. Lead the grounding wire of the feeder lightning grounding clip to the ground grid. No reverse direction is allowed. The angle formed by the grounding wire and the main feeder should not be more than 15°C. No reverse folding is allowed.

   In the case the antenna feeder system is installed on the tower, the grounding wire of the grounding clip should be led downward along the tower body.

In the case the antenna feeder system is installed on the roof top, the grounding wire of the grounding clip should be led close to the building lightning protection grid.

4. Before installing the grounding clip, wrap the grounding wire at the grounding clip end that is close to the grounding wire copper sheet with the waterproof adhesive tape, as shown in Fig. 6.2-3. This can improve the sealing effect and prevent the rain from falling into the feeder interior along the grounding wire.

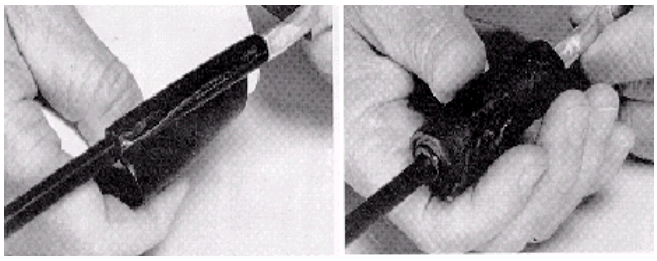

Fig. 6.2-3 Wrapping the Grounding Wire of the Grounding Clip with Waterproof Tape

5. Clamp the feeder external conductor with the grounding wire copper sheet and the locking spring plate, so that the grounding wire copper sheet and the feeder external conductor are fully meshed.

6. Take the following steps to conduct the waterproof treatment to the joint of the grounding clip and the feeder:

1) First wrap the waterproof adhesive tapes and then wrap the PVC tapes.

2) To wrap the waterproof adhesive tapes, apply them layer by layer from bottom to top first, then from top to bottom once again, and finally from bottom to top thrice, that is, wrap three layers of them. During the process, make sure the upper layer overlaps the lower layer by about half the width of the tapes.

7. The grounding end of the grounding clip can be connected to the main tower body or the outdoor cabling rack (connected to the lightning protection grid of the building) on the roof top. Remove paint and oxide within the radius of about 13mm at the connection place, and cover the clean area with antioxidant to ensure good electric contact. When the grounding end is connected, paint another coat of antirust paint.

8. Before the main feeder enters the room, the grounding end of the grounding clip can be connected to the outdoor grounding bar.

6.2.3 Installing the Indoor Lightning Arrester

For the wide-band lightning arrester that need not be grounded separately, you may directly connect it in serial to the place between the main feeder and the indoor set top jumper. During the installation, the lightning arrester and indoor equipment as the cabling rack should be insulated.

For the lightning arrester that need be grounded, a lightning arrester frame should be provided. Please refer to the assembly instructions provided by the supplier for the assembling of the lightning arrester frame. The installation steps are as follows:

1. Install the lightning arrester on its frame in advance.

   During the installation, please note that the connectors at both ends of the lightning arrester are different: One end is a DIN male connector (DIN-M) and the other is a DIN female connector (DIN-F). Make sure that the DIN-M connector of all the lightning arresters installed on the frame are in the same direction, and the DIN-F connector of all the lightning arresters are in the same direction. The lightning arrester should be securely installed on the frame and in close contact with the frame.

2. Fix the assembled lightning arrester to the cabling rack.

   Plan the installation position carefully to make both the main feeder and the set top jumper easily be connected to the lightning arrester and to enable easy cabling.

   The lower part of the lightning arrester frame that is secured to the cabling rack can be adjusted according to the width of the cabling rack.

   When the lightning arrester frame is installed on the cabling rack, make sure that its DIN-M connector points to the main feeder and its DIN-F connector points to the connection line from the jumper to the rack.

3. The lightning arrester is installed indoor. Its grounding wire should be connected to the outdoor grounding copper bar and should not contact with the conductor of the indoor cabling rack. The lightning arrester frame is insulated from the cabling rack.

   The installation of the lightning arrester frame is as shown in Fig. 6.2-4.

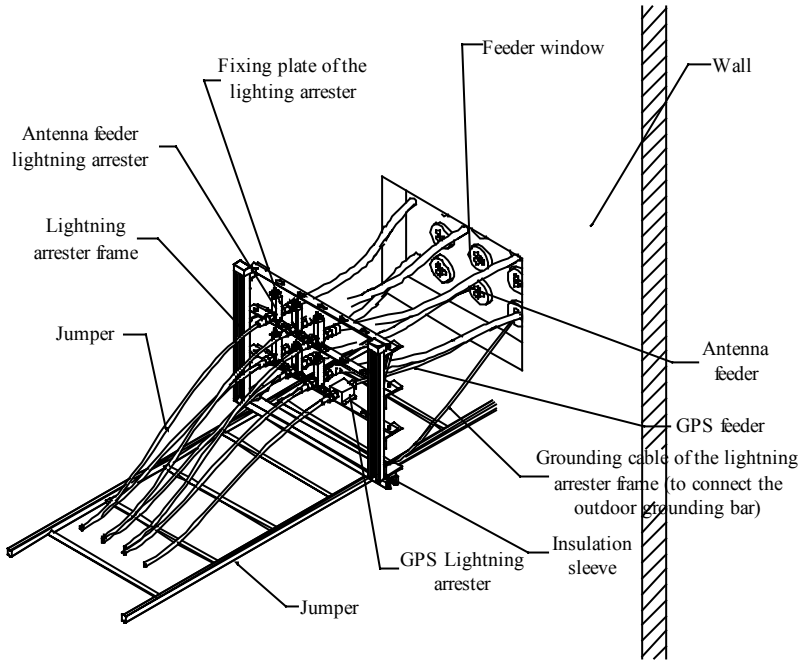

Fig. 6.2-4 Installing the Lightning Arrester Frame

7 Installing the Cabinet Internal Cables

🕮 Summary

This part describes:

- Configuration types of BTS and precautions of the installation of the front panel RF cables;
- Cable installation in BTS single-carrier and two-carrier configurations;
- Cable installation in BTS three-carrier above configurations.

7.1 Overview of the Internal Cable Installation

7.1.1 Configuration Types of BTS

A macro BTS can be configured in various ways, e.g., single-carrier three-sector, two-carrier three-sector and four-carrier three-sector as required by the installation environment and traffic conditions.

The RFE model varies with the BTS configuration and the number/length of connection lines configured for the front panel of the rack. The following sections describe the typical configurations: Single-carrier single-sector, single-carrier two-sector, single-carrier three-sector, and two-carrier three-sector.

7.1.2 Precautions for Installing the RF Cables on the Front Panel

The front panel of the BTS rack uses RF cables to transmit the uplink and downlink RF signals between RFE, HPA and TRX. N-type interfaces and SMA interfaces are use. During the cable installation, make sure to align the cables to the interfaces and screw them tight.

Generally, the RF cables have been deployed for a new base station and what needs to do is only take the feeder connectors out of the cabling trough on the front panel and

connect them to the RF interfaces on the front panel. However, re-cabling is required for a base station to be expanded in capacity. Note that the RF cables are attached with labels at both ends. The details are as follows:

1. The upper end (DIN connector) of the 1/2" feeder from the RF front end to the rack top has been installed to the rack top before factory delivery, so the onsite installation only involves its lower end. During the installation, remove dustproof cap from the lower end (N-type connector) of the feeder, hold the lower end and slightly push the middle part of the feeder so that the feeder bends naturally and its lower port aligns to the ANT port on the front panel of RFE, and then fasten the screw cap. Please be noted that during the installation you should align both the port and the screw cap to smoothly screw tight the 1/2" feeder because it is short and has a certain rigidity.

2. Fig. 7.1-1 shows the structure of the RF connection lines between RFE, HPA and TRX. The cables have all been deployed for the rack before factory delivery if the base station is newly built. During the installation, open the baffle of the cabling slot on the front panel and take out the connectors (SMA) and connect them to the corresponding positions against the labels on the cables. For the specific content of these labels, please refer to the information about "End A Direction" and "End B Direction" given in Table 7.2-1, Table 7.2-2, Table 7.2-3 and Table 7.2-4 concerning the "Front Panel Wiring List" of multiple configurations. Please also be noted that you should check the connectors against the cable labels once again after installing them.

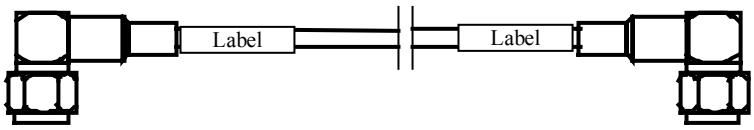

Fig. 7.1-1 Structure of the RF Cables on the Front Panel of the Rack

3. Some additional RFE, HPA and TRX modules are needed for a base station requiring capacity expansion. The RF cables connecting them need onsite connection. To do so, you should select the RF connection cables according to the configuration requirements of the base station to be expanded, deploy the feeders tidily and bind them securely inside the cabling troughs in accordance

with the route requirements as regulated in the cabling diagram, and then connect them one by one as instructed by their labels.

4. A load of 50Ω should be matched to each port that does not connect any RF cable.

5. The cabling should be neat and in order, and no cable should be damaged during the bundling or cutting of their cable ties.

7.2 Installing the Cables for the Single-carrier BTS and the Two-Carrier BTS

7.2.1 Installing the RF Cables for a Single-carrier Single-sector BTS

1. Connecting the RF cables

   Fig. 7.2-1 shows how to connect the RF cables on the front panel of the rack for the single-carrier single-sector BTS.

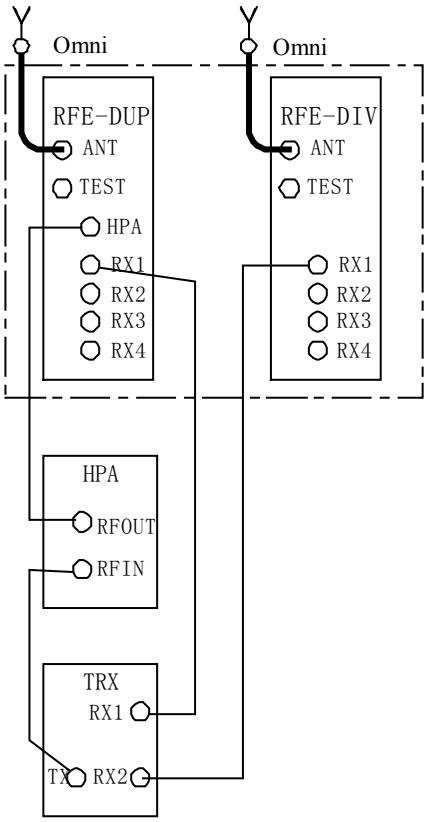

Fig. 7.2-1 RF Cable Connection on the Front Panel of the Rack for the Single-carrier Single-sector BTS

2. Cabling of the front panel

Fig. 7.2-2 shows the wiring of the front panel for the rack of the single-carrier single-sector BTS.

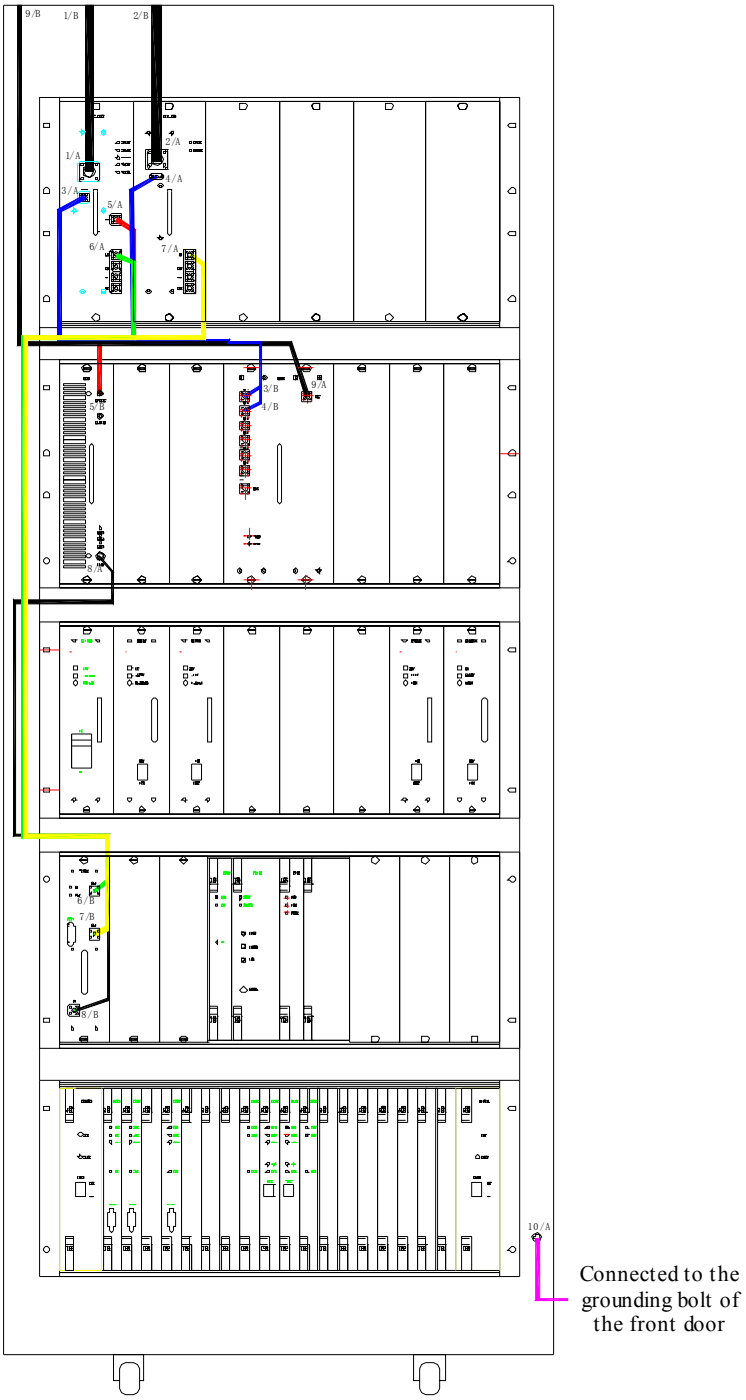

Fig. 7.2-2 Front Panel Wiring for the Rack of the Single-carrier Single-sector BTS with the BDS Plug-in Shelf

3. The wiring of the front panel is further described in Table 7.2-1.

Table 7.2-1 Front Panel Wiring of the Rack for the Single-carrier Single-sector BTS

No.	Cable Name and Code	Length (mm)	End A Direction	End B Direction
	RFE RF cables			
1	RFE/01-250 (220)	250 (220)	BTS-RFE-RFE1-ANT	BTS - set top
2	RFE/02-220	220	BTS-RFE-RFE2-ANT	BTS - set top
	RF03 RF cables			
3	RF03/01-530	530	BTS-RFE-RFE1-TEST	BTS-HPA-BTM-RFE1
4	RF03/02-460	460	BTS-RFE-RFE2-TEST	BTS-HPA-BTM-RFE2
	RF01 RF cables			
5	RF01/07-1050	1050	BTS-RFE-RFE1-RX1	BTS-TRX-TRX1-RX1
6	RF01/08-1200	1200	BTS-RFE-RFE2-RX1	BTS-TRX-TRX1-RX2
	RF06 RF cables			
7	RF06/01-260	260	BTS-RFE-RFE1-HPA	BTS-HPA-HPA1-RF-OUT
8	RF06/04-800	800	BTS-HPA-HPA1-RF-IN	BTS-TRX-TRX1-TX
	MS test antenna			
9	MS-860	860	BTS-HPA-BTM-ANT	BTS - set top
	Grounding cables of the door			
10	JDX	250	Grounding screw of the BTS grounding shelf	Grounding screw of the front door

7.2.2 Installing the RF Cables for a Single-carrier Two-sector BTS

1. Connecting the RF cables

   Fig. 7.2-3 shows the circuitry on the front panel of the rack for the single-carrier two-sector BTS.

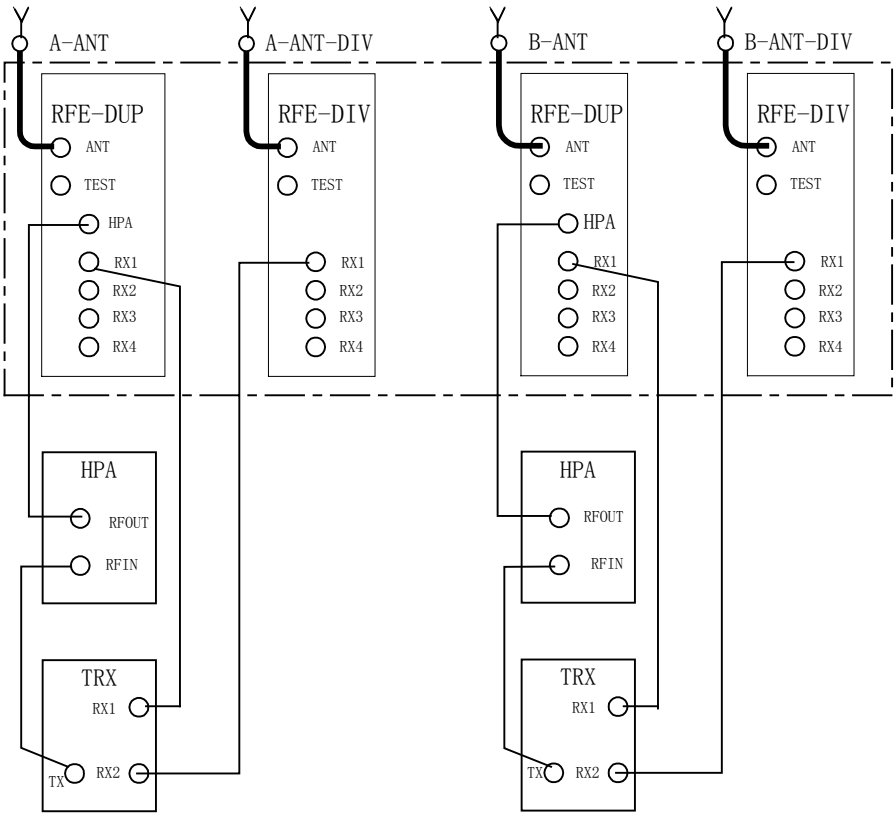

Fig. 7.2-3 RF Cable Connection on the Front Panel of the Rack for the Single-carrier Two-sector BTS

2. Cabling of the front panel

Fig. 7.2-4 shows the wiring of the front panel for the rack of the single-carrier two-sector BTS.

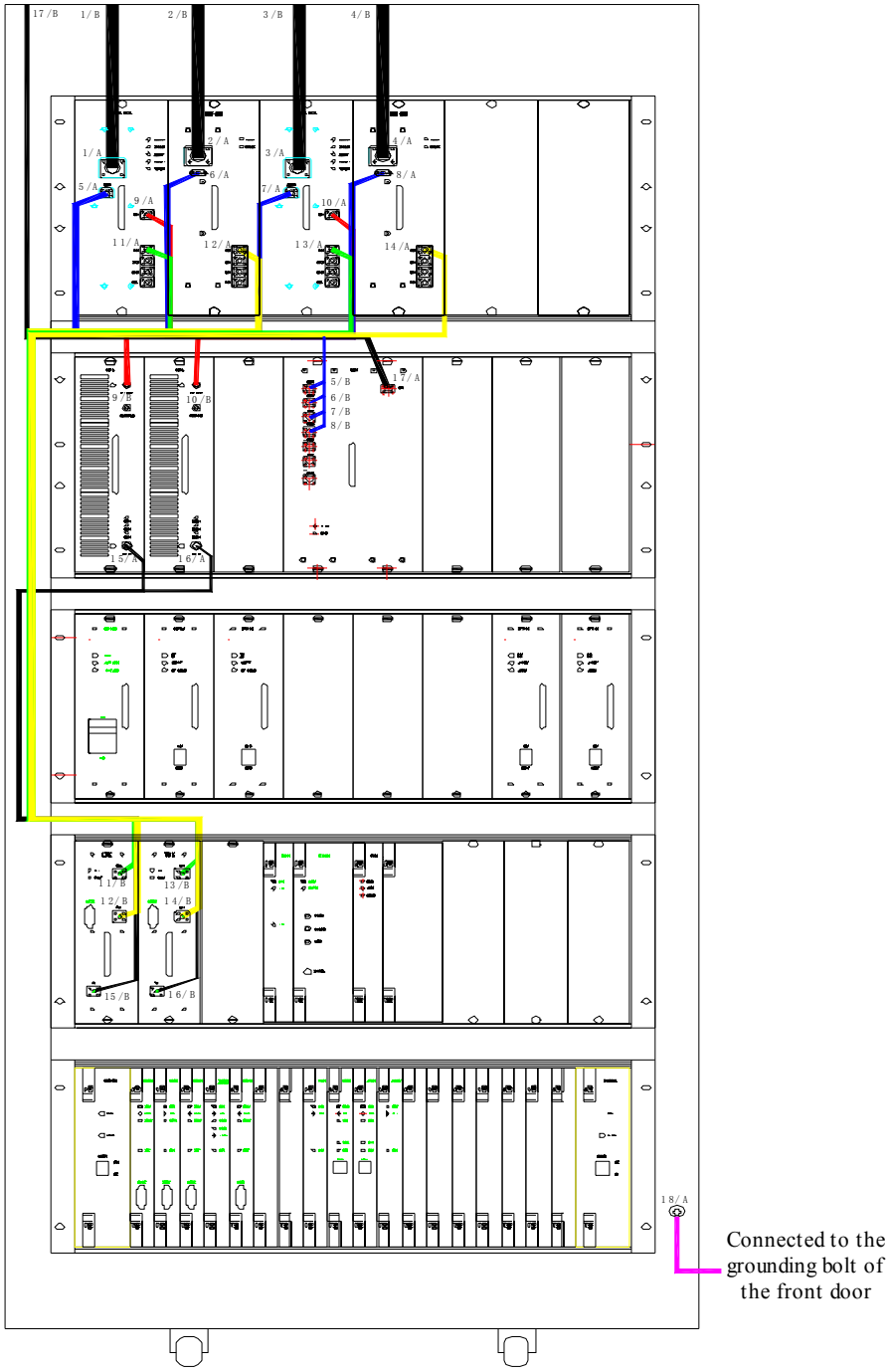

Fig. 7.2-4 Front Panel Wiring for the Rack of the Single-carrier Two-sector BTS with the BDS Plug-in Shelf

3. The wiring of the front panel is further described in Table 7.2-2.

Table 7.2-2 Front Panel Wiring of the Rack for the Single-carrier Two-sector BTS

No.	Cable Name and Code	Length (mm)	End A Direction	End B Direction
	RFE RF cables			
1	RFE/01(02) -250(220)	250(220)	BTS-RFE-RFE1-ANT	BTS - set top
2	RFE/02-220	220	BTS-RFE-RFE2-ANT	BTS - set top
3	RFE/01(02) -250(220)	250(220)	BTS-RFE-RFE3-ANT	BTS - set top
4	RFE/02-220	220	BTS-RFE-RFE4-ANT	BTS - set top
	RF03 RF cables			
5	RF03/01-530	530	BTS-RFE-RFE1-TEST	BTS-HPA-BTM-RFE1
6	RF03/02-460	460	BTS-RFE-RFE2-TEST	BTS-HPA-BTM-RFE2
7	RF03/03-380	380	BTS-RFE-RFE3-TEST	BTS-HPA-BTM-RFE3
8	RF03/04-390	390	BTS-RFE-RFE4-TEST	BTS-HPA-BTM-RFE4
	RF01 RF cables			
9	RF01/07-1050	1050	BTS-RFE-RFE1-RX1	BTS-TRX-TRX1-RX1
10	RF01/08-1200	1200	BTS-RFE-RFE2-RX1	BTS-TRX-TRX1-RX2
11	RF01/09-1300	1300	BTS-RFE-RFE3-RX1	BTS-TRX-TRX2-RX1
12	RF01/10-1450	1450	BTS-RFE-RFE4-RX1	BTS-TRX-TRX2-RX2
	RF06 RF cables			
13	RF06/01-260	260	BTS-RFE-RFE1-HPA	BTS-HPA-HPA1-RF-OUT
14	RF06/02-370	370	BTS-RFE-RFE3-HPA	BTS-HPA-HPA2-RF-OUT
15	RF06/04-800	800	BTS-HPA-HPA1-RF-IN	BTS-TRX-TRX1-TX
16	RF06/05-930	930	BTS-HPA-HPA2-RF-IN	BTS-TRX-TRX2-TX
	MS test antenna			
17	MS-860	860	BTS-HPA-BTM-ANT	BTS - set top
	Grounding cables of the door			
18	JDX	250	Grounding screw of the BTS frame	Grounding screw of the front door

7.2.3 Installing the RF Cables for a Single-carrier Three-sector BTS

1. Connecting the RF cables

Fig. 7.2-5 shows the circuitry on the front panel of the rack for the single-carrier three-sector BTS.

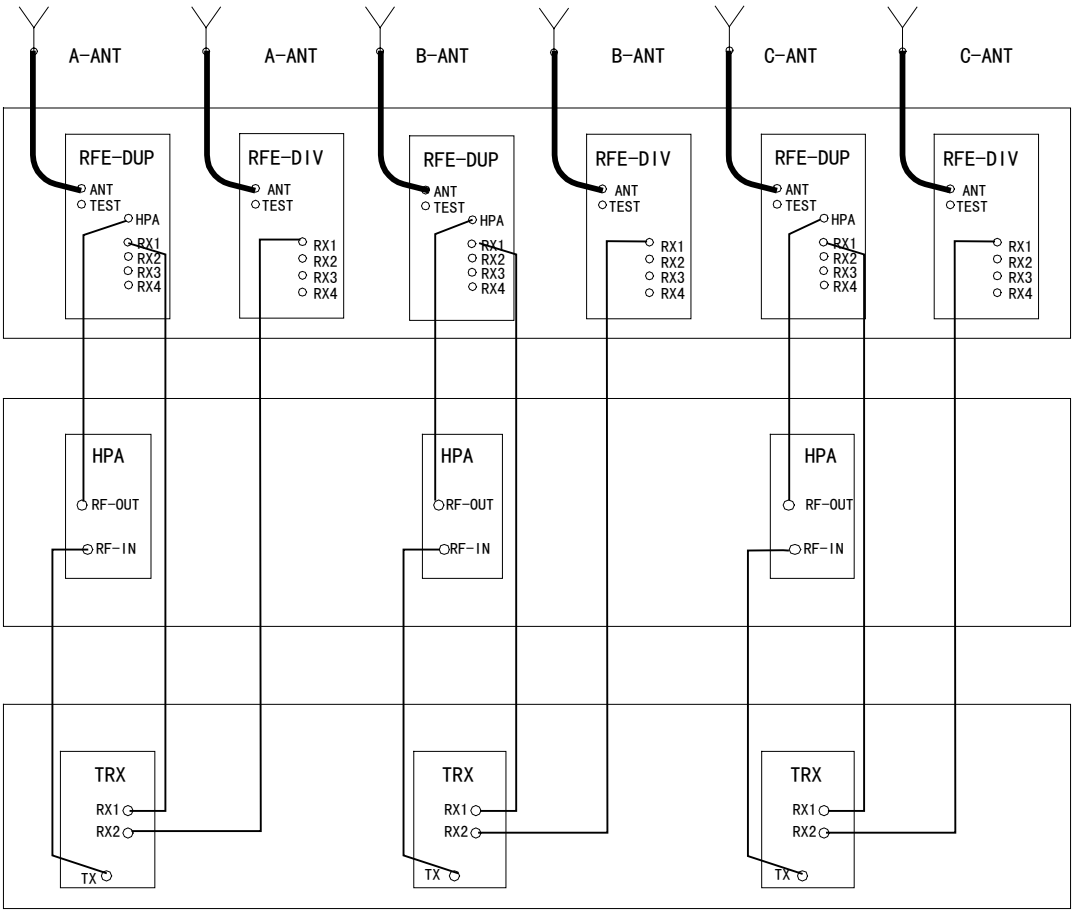

Fig. 7.2-5 Circuitry on the Front Panel of the Rack for the Single-carrier Three-sector BTS

2. Cabling of the front panel

Fig. 7.2-6 shows the wiring of the front panel for the rack of the single-carrier three-sector BTS. Fig. 7.2-7 shows the wiring for the BTS rack with the EBDS-HS.

Fig. 7.2-6 Front Panel Wiring for the Rack of the Single-carrier Three-sector BTS

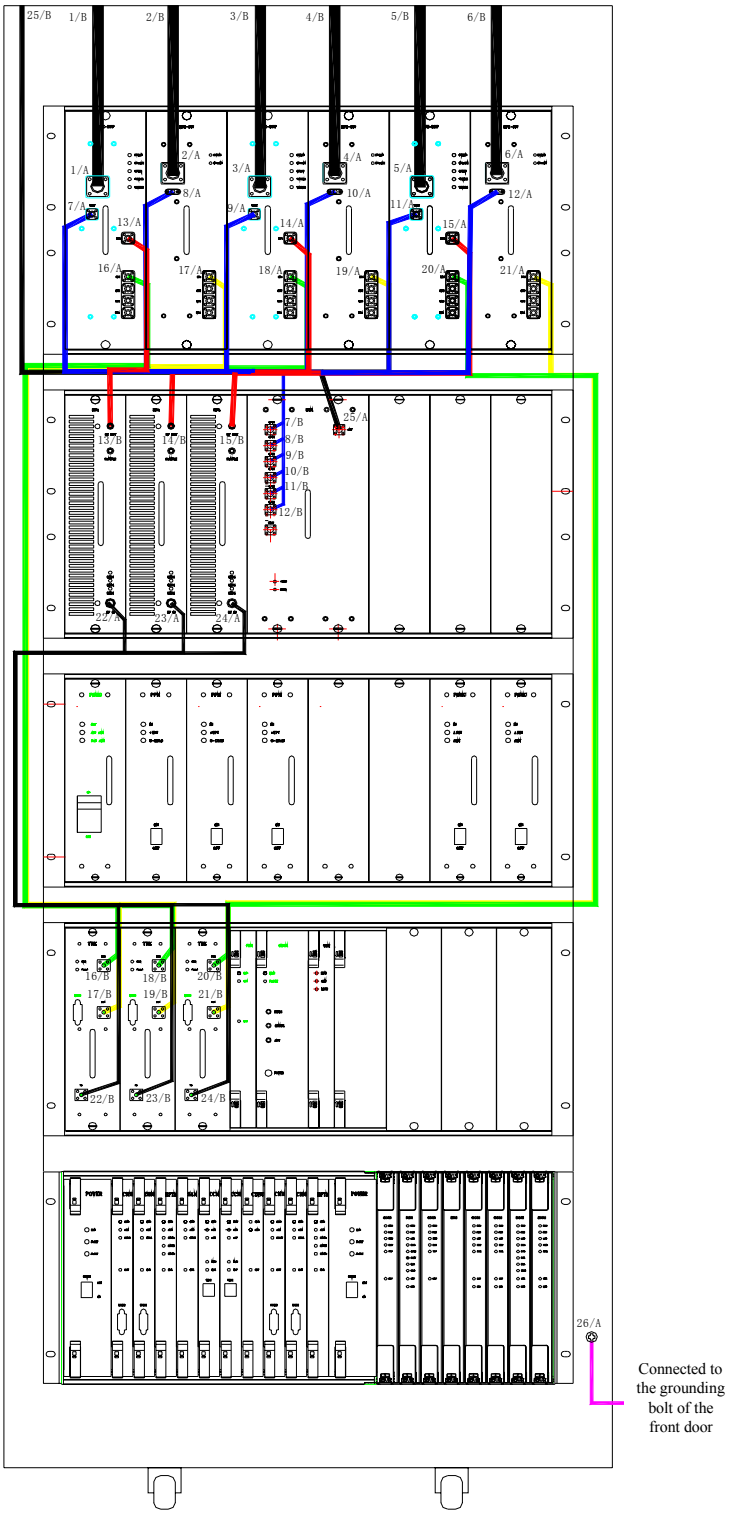

Fig. 7.2-7 Front Panel Wiring for the Rack of the Single-carrier Three-sector BTS with the EBDS-HS Part of the EBDS Hybrid Shelf

3. The wiring of the front panel is further described in Table 7.2-3.

Table 7.2-3 Front Panel Wiring of the Rack for the Single-carrier Three-sector BTS

No.	Cable Name and Code	Length (mm)	End A Direction	End B Direction
	RFE RF cables			
1	RFE/01(02) -250(220)	250(220)	BTS-RFE-RFE1-ANT	BTS - set top
2	RFE/02-220	220	BTS-RFE-RFE2-ANT	BTS - set top
3	RFE/01(02) -250(220)	250(220)	BTS-RFE-RFE3-ANT	BTS - set top
4	RFE/02-220	220	BTS-RFE-RFE4-ANT	BTS - set top
5	RFE/01(02) -250(220)	250(220)	BTS-RFE-RFE5-ANT	BTS - set top
6	RFE/02-220	220	BTS-RFE-RFE6-ANT	BTS - set top
	RF03 RF cables			
7	RF03/01-530	530	BTS-RFE-RFE1-TEST	BTS-HPA-BTM-RFE1
8	RF03/02-460	460	BTS-RFE-RFE2-TEST	BTS-HPA-BTM-RFE2
9	RF03/03-380	380	BTS-RFE-RFE3-TEST	BTS-HPA-BTM-RFE3
10	RF03/04-390	390	BTS-RFE-RFE4-TEST	BTS-HPA-BTM-RFE4
11	RF03/05-510	510	BTS-RFE-RFE5-TEST	BTS-HPA-BTM-RFE5
12	RF03/06-600	600	BTS-RFE-RFE6-TEST	BTS-HPA-BTM-RFE6
	RF01 RF cables			
13	RF01/07-1050	1050	BTS-RFE-RFE1-RX1	BTS-TRX-TRX1-RX1
14	RF01/08-1200	1200	BTS-RFE-RFE2-RX1	BTS-TRX-TRX1-RX2
15	RF01/09-1300	1300	BTS-RFE-RFE3-RX1	BTS-TRX-TRX2-RX1
16	RF01/10-1450	1450	BTS-RFE-RFE4-RX1	BTS-TRX-TRX2-RX2
17	RF01/11-1400	1400	BTS-RFE-RFE5-RX1	BTS-TRX-TRX3-RX1
18	RF01/12-1370	1370	BTS-RFE-RFE6-RX1	BTS-TRX-TRX3-RX2
	RF06 RF cables			
19	RF06/01-260	260	BTS-RFE-RFE1-HPA	BTS-HPA-HPA1-RF-OUT
20	RF06/02-370	370	BTS-RFE-RFE3-HPA	BTS-HPA-HPA2-RF-OUT
21	RF06/03-480	480	BTS-RFE-RFE5-HPA	BTS-HPA-HPA3-RF-OUT
22	RF06/04-800	800	BTS-HPA-HPA1-RF-IN	BTS-TRX-TRX1-TX
23	RF06/05-930	930	BTS-HPA-HPA2-RF-IN	BTS-TRX-TRX2-TX
24	RF06/06-1050	1050	BTS-HPA-HPA3-RF-IN	BTS-TRX-TRX3-TX
	MS test antenna			
25	MS-860	860	BTS-HPA-BTM-ANT	BTS - set top
	Grounding cables of the door			
26	JDX	250	Grounding screw of the BTS frame	Grounding screw of the front door

7.2.4 Installing the RF Cables for a Two-carrier Three-sector BTS

1. Connecting the RF cables

   Fig. 7.2-8 shows the circuitry on the front panel of the rack for the two-carrier three-sector BTS.

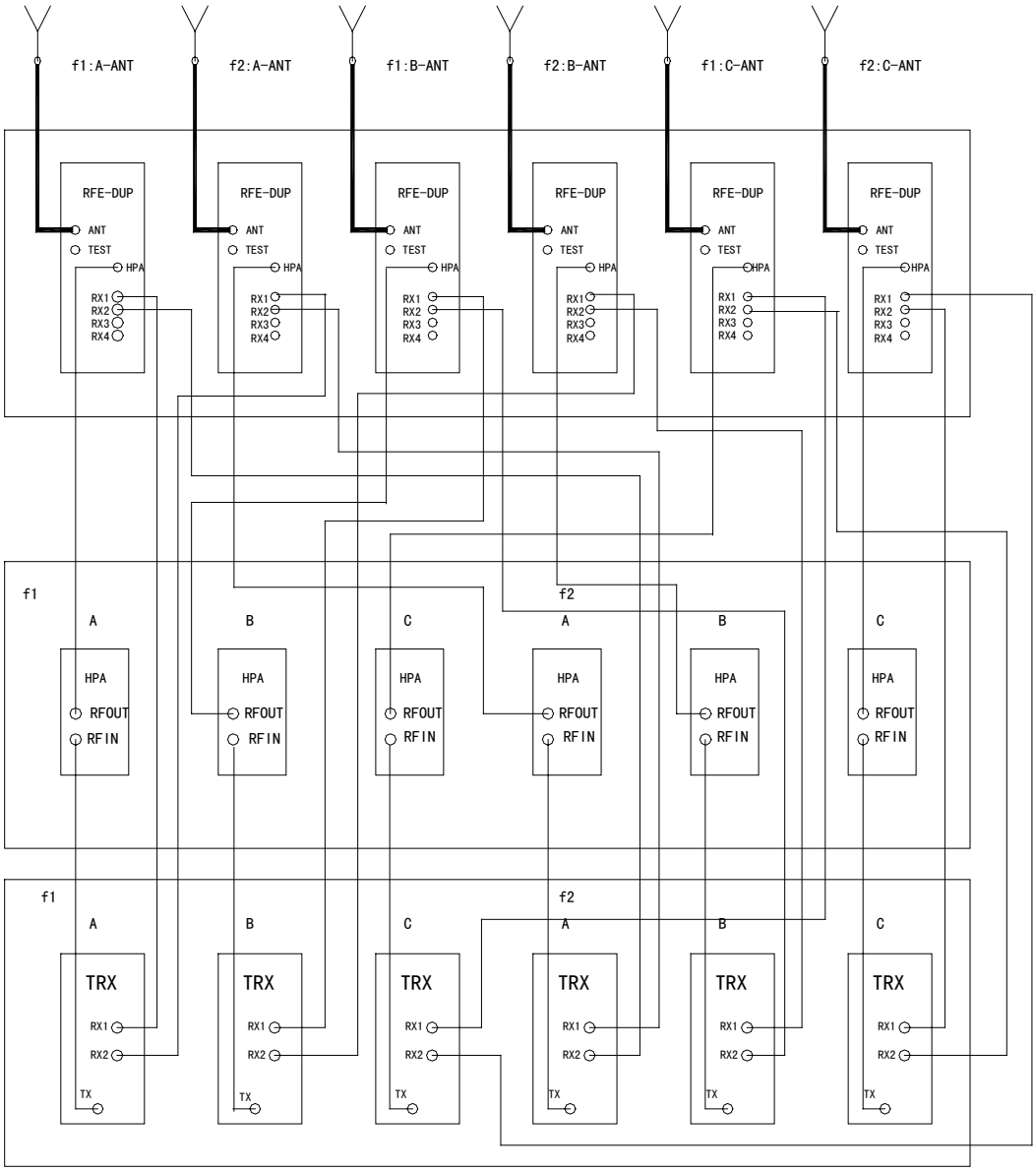

Fig. 7.2-8 Circuitry on the Front Panel of the Rack for the Two-carrier Three-sector BTS

2. Cabling of the front panel

Fig. 7.2-9 shows the wiring of the front panel for the rack of the two-carrier three-sector BTS.

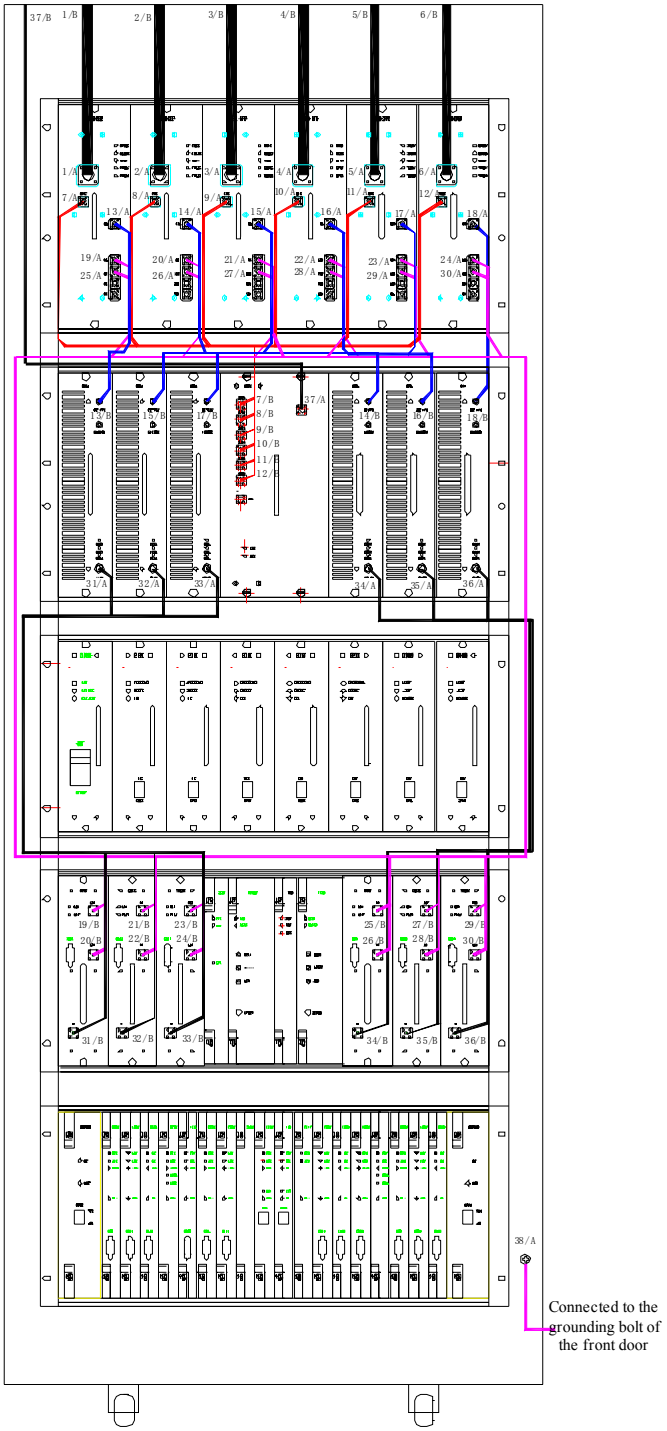

Fig. 7.2-9 Front Panel Wiring for the Rack of the Two-carrier Three-sector BTS

3. The wiring of the front panel is further described in Table 7.2-4.

Table 7.2-4 Front Panel Wiring of the Rack for the Two-carrier Three-sector BTS

No.	Cable Name and Code	Length (mm)	End A Direction	End B Direction
	RFE RF cables			
1	RFE/01(02) -250(220)	250(220)	BTS-RFE-RFE1-ANT	BTS - set top
2	RFE/01(02) -250(220)	250(220)	BTS-RFE-RFE2-ANT	BTS - set top
3	RFE/01(02) -250(220)	250(220)	BTS-RFE-RFE3-ANT	BTS - set top
4	RFE/01(02) -250(220)	250(220)	BTS-RFE-RFE4-ANT	BTS - set top
5	RFE/01(02) -250(220)	250(220)	BTS-RFE-RFE5-ANT	BTS - set top
6	RFE/01(02) -250(220)	250(220)	BTS-RFE-RFE6-ANT	BTS - set top
	RF03 RF cables			
7	RF03/01-530	530	BTS-RFE-RFE1-TEST	BTS-HPA-BTM-RFE1
8	RF03/02-460	460	BTS-RFE-RFE2-TEST	BTS-HPA-BTM-RFE2
9	RF03/03-380	380	BTS-RFE-RFE3-TEST	BTS-HPA-BTM-RFE3
10	RF03/04-390	390	BTS-RFE-RFE4-TEST	BTS-HPA-BTM-RFE4
11	RF03/05-510	510	BTS-RFE-RFE5-TEST	BTS-HPA-BTM-RFE5
12	RF03/06-600	600	BTS-RFE-RFE6-TEST	BTS-HPA-BTM-RFE6
	RF01 RF cables			
19	RF01/07-1050	1050	BTS-RFE-RFE1-RX1	BTS-TRX-TRX1-RX1
20	RF01/08-1200	1200	BTS-RFE-RFE2-RX1	BTS-TRX-TRX1-RX2
21	RF01/09-1300	1300	BTS-RFE-RFE3-RX1	BTS-TRX-TRX2-RX1
22	RF01/10-1450	1450	BTS-RFE-RFE4-RX1	BTS-TRX-TRX2-RX2
23	RF01/11-1400	1400	BTS-RFE-RFE5-RX1	BTS-TRX-TRX3-RX1
24	RF01/12-1370	1370	BTS-RFE-RFE6-RX1	BTS-TRX-TRX3-RX2
25	RF01/17-1330	1330	BTS-RFE-RFE1-RX2	BTS-TRX-TRX4-RX1
26	RF01/18-1500	1500	BTS-RFE-RFE2-RX2	BTS-TRX-TRX4-RX2
27	RF01/09-1300	1300	BTS-RFE-RFE3-RX2	BTS-TRX-TRX5-RX1
28	RF01/09-1300	1300	BTS-RFE-RFE4-RX2	BTS-TRX-TRX5-RX2
29	RF01/15-1100	1100	BTS-RFE-RFE5-RX2	BTS-TRX-TRX6-RX1
30	RF01/07-1050	1050	BTS-RFE-RFE6-RX2	BTS-TRX-TRX6-RX2
	RF06 RF cables			
13	RF06/01-260	260	BTS-RFE-RFE1-HPA	BTS-HPA-HPA1-RF-OUT

No.	Cable Name and Code	Length (mm)	End A Direction	End B Direction
14	RF06/03-480	480	BTS-RFE-RFE2-HPA	BTS-HPA-HPA4-RF-OUT
15	RF06/02-370	370	BTS-RFE-RFE3-HPA	BTS-HPA-HPA2-RF-OUT
16	RF06/02-370	370	BTS-RFE-RFE4-HPA	BTS-HPA-HPA5-RF-OUT
17	RF06/03-480	480	BTS-RFE-RFE5-HPA	BTS-HPA-HPA3-RF-OUT
18	RF06/01-260	260	BTS-RFE-RFE6-HPA	BTS-HPA-HPA6-RF-OUT
31	RF06/04-800	800	BTS-HPA-HPA1-RF-IN	BTS-TRX-TRX1-TX
32	RF06/05-930	930	BTS-HPA-HPA2-RF-IN	BTS-TRX-TRX2-TX
33	RF06/06-1050	1050	BTS-HPA-HPA3-RF-IN	BTS-TRX-TRX3-TX
34	RF06/06-1050	1050	BTS-HPA-HPA4-RF-IN	BTS-TRX-TRX4-TX
35	RF06/05-930	930	BTS-HPA-HPA5-RF-IN	BTS-TRX-TRX5-TX
36	RF06/04-800	800	BTS-HPA-HPA6-RF-IN	BTS-TRX-TRX6-TX
	MS test antenna			
37	MS-860	860	BTS-HPA-BTM-ANT	BTS - set top
	Grounding cables of the door			
38	JDX	250	Grounding screw of the BTS frame	Grounding screw of the front door

7.2.5 Connecting the Backplane Signal Cables for the Rack of a Single-carrier or Two-carrier BTS

The internal signal cables at the BTS rack's backplane are: transit cable from rack top to GPS antenna of GCM board, T1 transit cable from rack top to DSM board, LVDS cable, HPA unit cable and BTM cable.

The ZXC10 BTSB I28A backplane cables are ready connected and tested before rack delivery and it's unnecessary to lay them over again during installation. For easier expansion, the backplane cables are already laid out for the configuration of two carriers and three sectors. For just in case, check if the cables are fast connected before the rack is powered on. If there is a need to shoot a trouble while commissioning for expansion purpose, the backplane indications and signal cable labels may be checked for any connection error or cable problem.

7.3 Installing the Cables for the BTS of Three Carriers and Above

Two BTS cabinets should be combined for the BTSB I2 configuration of three carriers and above: One basic cabinet (1#) that accommodates the GCM, DCM and SNM modules, and one extended cabinet (2#).For easier expansion, all backplane cables for the BTS of three carriers and above are deployed as required by the four-carrier

three-sector configuration, while the front panel cabling can be either for three-carrier three-sector configuration or four-carrier three-sector configuration.

7.3.1 Installing the RF Cables for a Three-carrier Three-sector BTS

1. Connecting the RF cables

   Fig. 7.3-1 shows the circuitry on the front panel of the rack for the three-carrier three-sector BTS.

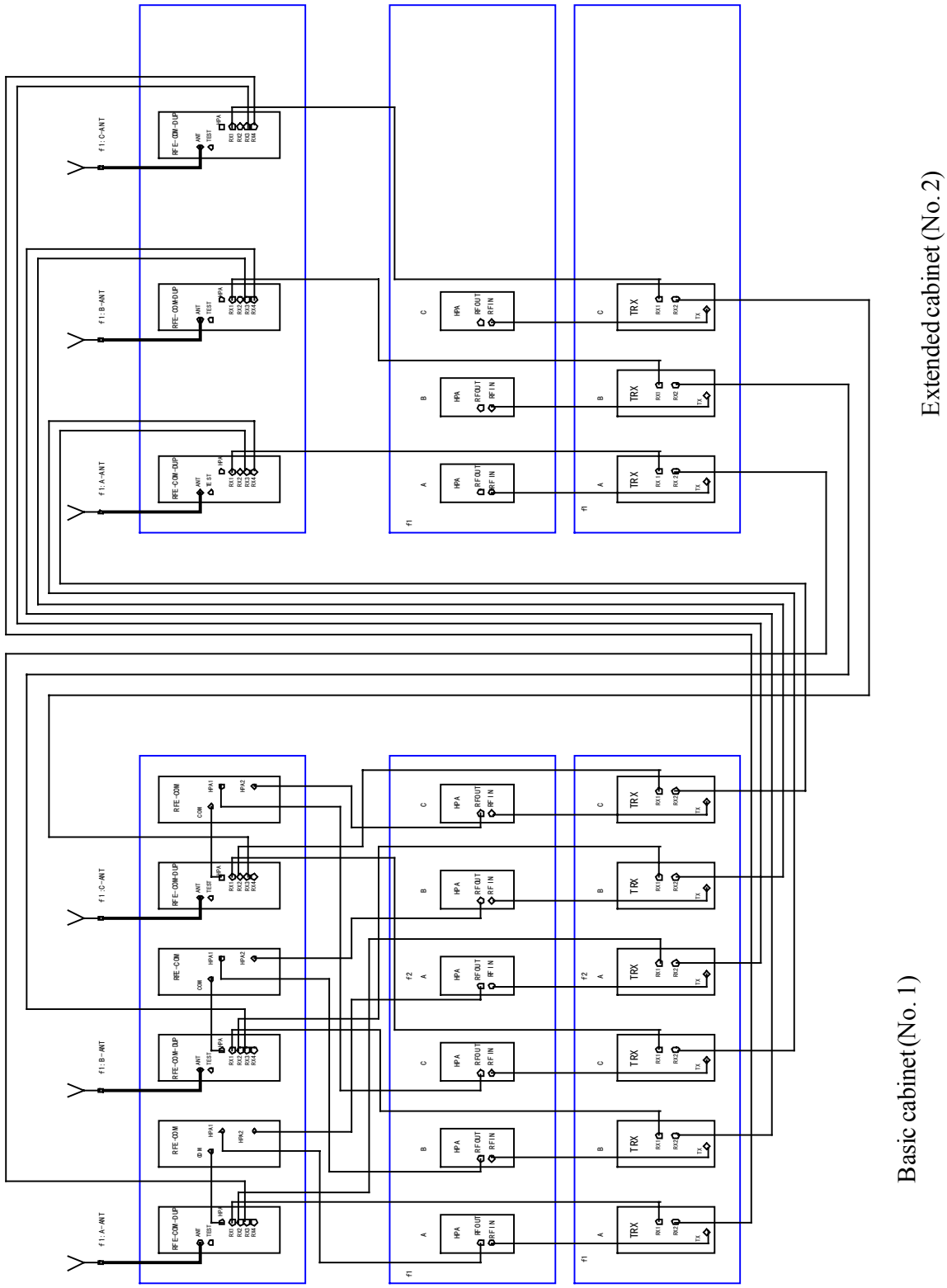

Fig. 7.3-1 Circuitry on the Front Panel of the Rack for the Three-carrier Three-sector BTS

2. Cabling of the front panel

Fig. 7.3-2 shows the wiring of the front panel for the rack of the three-carrier three-sector BTS.

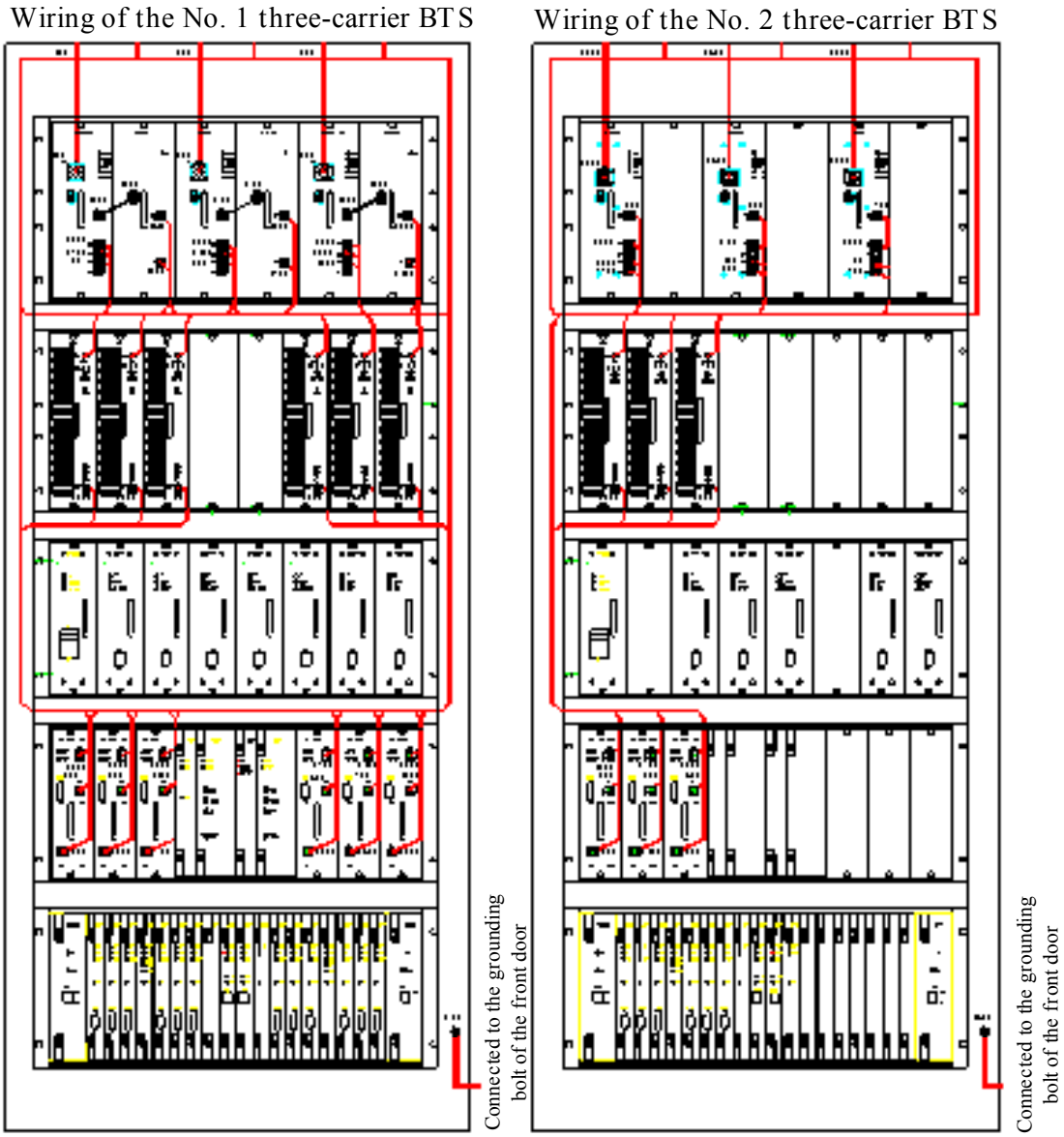

Fig. 7.3-2 Front Panel Wiring for the Rack of the Three-carrier Three-sector BTS

3. The wiring of the front panel is further described in Table 7.3-1.

Table 7.3-1 Wiring List of the Front Panel for the 1# Three-carrier BTS Cabinet

No.	Cable Name and Code	Length (mm)	End A Direction	End B Direction
	RFE RF cables			
1	RFE/01(02) -250(220)	250 (220)	1#BTS-RFE-RFE1-ANT	1#BTS – set top ANT1
2	RFE/01(02) -250(220)	250 (220)	1#BTS-RFE-RFE3-ANT	1#BTS - set top ANT3
3	RFE/01(02) -250(220)	250 (220)	1#BTS-RFE-RFE5-ANT	1#BTS - set top ANT5
	RF08 RF cables			
4	RF08/01-850	850	1#BTS-RFE-RFE1-RX3	1#BTS - set top ANT2 - RFE
5	RF08/05-1600	1600	1#BTS-TRX-TRX1-RX2	1#BTS – set top ANT2 - TRX
6	RF08/08-2000	2000	1#BTS-TRX-TRX4-RX2	1#BTS – set top ANT2 - TRX
7	RF08/03-1300	1300	1#BTS-RFE-RFE3-RX3	1#BTS - set top ANT4 - RFE
8	RF08/07-1900	1900	1#BTS-TRX-TRX2-RX2	1#BTS – set top ANT4 - TRX
9	RF08/06-1700	1700	1#BTS-TRX-TRX5-RX2	1#BTS – set top ANT4 - TRX
10	RF08/02-950	950	1#BTS-RFE-RFE5-RX3	1#BTS – set top ANT6 - RFE
11	RF08/08-2000	2000	1#BTS-TRX-TRX3-RX2	1#BTS – set top ANT6 - TRX
12	RF08/04-1450	1450	1#BTS-TRX-TRX6-RX2	1#BTS – set top ANT6 - TRX
	RF07 RF cables			
13	RF07	50.5	1#BTS-RFE-RFE1-HPA	1#BTS-RFE-RFE2-COM
14	RF07	50.5	1#BTS-RFE-RFE3-HPA	1#BTS-RFE-RFE4-COM
15	RF07	50.5	1#BTS-RFE-RFE5-HPA	1#BTS-RFE-RFE6-COM
	RF06 RF cables			
16	RF06/02-370	370	1#BTS-RFE-RFE2-HPA1	1#BTS-HPA-HPA1-RF-OUT
17	RF06/09-400	400	1#BTS-RFE-RFE2-HPA2	1#BTS-HPA-HPA4-RF-OUT
18	RF06/03-480	480	1#BTS-RFE-RFE4-HPA1	1#BTS-HPA-HPA2-RF-OUT
19	RF06/08-320	320	1#BTS-RFE-RFE4-HPA2	1#BTS-HPA-HPA5-RF-OUT
20	RF06/10-600	600	1#BTS-RFE-RFE6-HPA1	1#BTS-HPA-HPA3-RF-OUT
21	RF06/07-180	180	1#BTS-RFE-RFE6-HPA2	1#BTS-HPA-HPA6-RF-OUT
22	RF06/04-800	800	1#BTS-HPA-HPA1-RF-IN	1#BTS-TRX-TRX1-TX
23	RF06/05-930	930	1#BTS-HPA-HPA2-RF-IN	1#BTS-TRX-TRX2-TX
24	RF06/06-1050	1050	1#BTS-HPA-HPA3-RF-IN	1#BTS-TRX-TRX3-TX
25	RF06/06-1050	1050	1#BTS-HPA-HPA4-RF-IN	1#BTS-TRX-TRX4-TX

No.	Cable Name and Code	Length (mm)	End A Direction	End B Direction
26	RF06/05-930	930	1#BTS-HPA-HPA5-RF-IN	1#BTS-TRX-TRX5-TX
27	RF06/04-800	800	1#BTS-HPA-HPA6-RF-IN	1#BTS-TRX-TRX6-TX
	RF01 RF cables			
28	RF01/07-1050	1050	1#BTS-RFE-RFE1-RX1	1#BTS-TRX-TRX1-RX1
29	RF01/17-1330	1330	1#BTS-RFE-RFE1-RX2	1#BTS-TRX-TRX4-RX1
30	RF01/09-1300	1300	1#BTS-RFE-RFE3-RX1	1#BTS-TRX-TRX2-RX1
31	RF01/09-1300	1300	1#BTS-RFE-RFE3-RX2	1#BTS-TRX-TRX5-RX1
32	RF01/11-1400	1400	1#BTS-RFE-RFE5-RX1	1#BTS-TRX-TRX3-RX1
33	RF01/15-1100	1100	1#BTS-RFE-RFE5-RX2	1#BTS-TRX-TRX6-RX1
	Grounding cables of the door			
34	JDX	250	Grounding screw of the BTS frame	Grounding screw of the front door
	RFE RF cables			
35	RFE/01(02) -250(220)	250(220)	2#BTS-RFE-RFE1-ANT	2#BTS to set top ANT1
36	RFE/01(02) -250(220)	250(220)	2#BTS-RFE-RFE3-ANT	2#BTS - set top ANT3
37	RFE/01(02) -250(220)	250(220)	2#BTS-RFE-RFE5-ANT	2#BTS - set top ANT5
	RF08 RF cables			
38	RF08/01-850	850	2#BTS-RFE-RFE1-RX3	2#BTS - set top ANT2 - RFE
39	RF08/01-850	850	2#BTS-RFE-RFE1-RX4	2#BTS - set top ANT2 - RFE
40	RF08/05-1600	1600	2#BTS-TRX-TRX1-RX2	2#BTS – set top ANT2 - TRX
41	RF08/03-1300	1300	2#BTS-RFE-RFE3-RX3	2#BTS - set top ANT4 - RFE
42	RF08/03-1300	1300	2#BTS-RFE-RFE3-RX4	2#BTS - set top ANT4 - RFE
43	RF08/07-1900	1900	2#BTS-TRX-TRX2-RX2	2#BTS – set top ANT4 - TRX
44	RF08/02-950	950	2#BTS-RFE-RFE5-RX3	2#BTS – set top ANT6 - RFE
45	RF08/02-950	950	2#BTS-RFE-RFE5-RX4	2#BTS – set top ANT6 - RFE
46	RF08/08-2000	2000	2#BTS-TRX-TRX3-RX2	2#BTS – set top ANT6 - TRX
	RF06 RF cables			
47	RF06/01-260	260	2#BTS-RFE-RFE1-HPA1	2#BTS-HPA-HPA1-RF-OUT
48	RF06/09-400	400	2#BTS-RFE-RFE3-HPA1	2#BTS-HPA-HPA2-RF-OUT
49	RF06/03-480	480	2#BTS-RFE-RFE5-HPA1	2#BTS-HPA-HPA3-RF-OUT
50	RF06/04-800	800	2#BTS-HPA-HPA1-RF-IN	2#BTS-TRX-TRX1-TX

No.	Cable Name and Code	Length (mm)	End A Direction	End B Direction
51	RF06/05-930	930	2#BTS-HPA-HPA2-RF-IN	2#BTS-TRX-TRX2-TX
52	RF06/06-1050	1050	2#BTS-HPA-HPA3-RF-IN	2#BTS-TRX-TRX3-TX
	RF01 RF cables			
53	RF01/07-1050	1050	2#BTS-RFE-RFE1-RX1	2#BTS-TRX-TRX1-RX1
54	RF01/09-1300	1300	2#BTS-RFE-RFE3-RX1	2#BTS-TRX-TRX2-RX1
55	RF01/20-1600	1600	2#BTS-RFE-RFE5-RX1	2#BTS-TRX-TRX3-RX1
	Grounding cables of the door			
56	JDX	250	Grounding screw of the BTS frame	Grounding screw of the front door

7.3.2 Installing the RF Cables for a Four-carrier Three-sector BTS

1. Connecting the RF cables

   Fig. 7.3-3 shows the circuitry on the front panel of the rack for the four-carrier three-sector BTS.

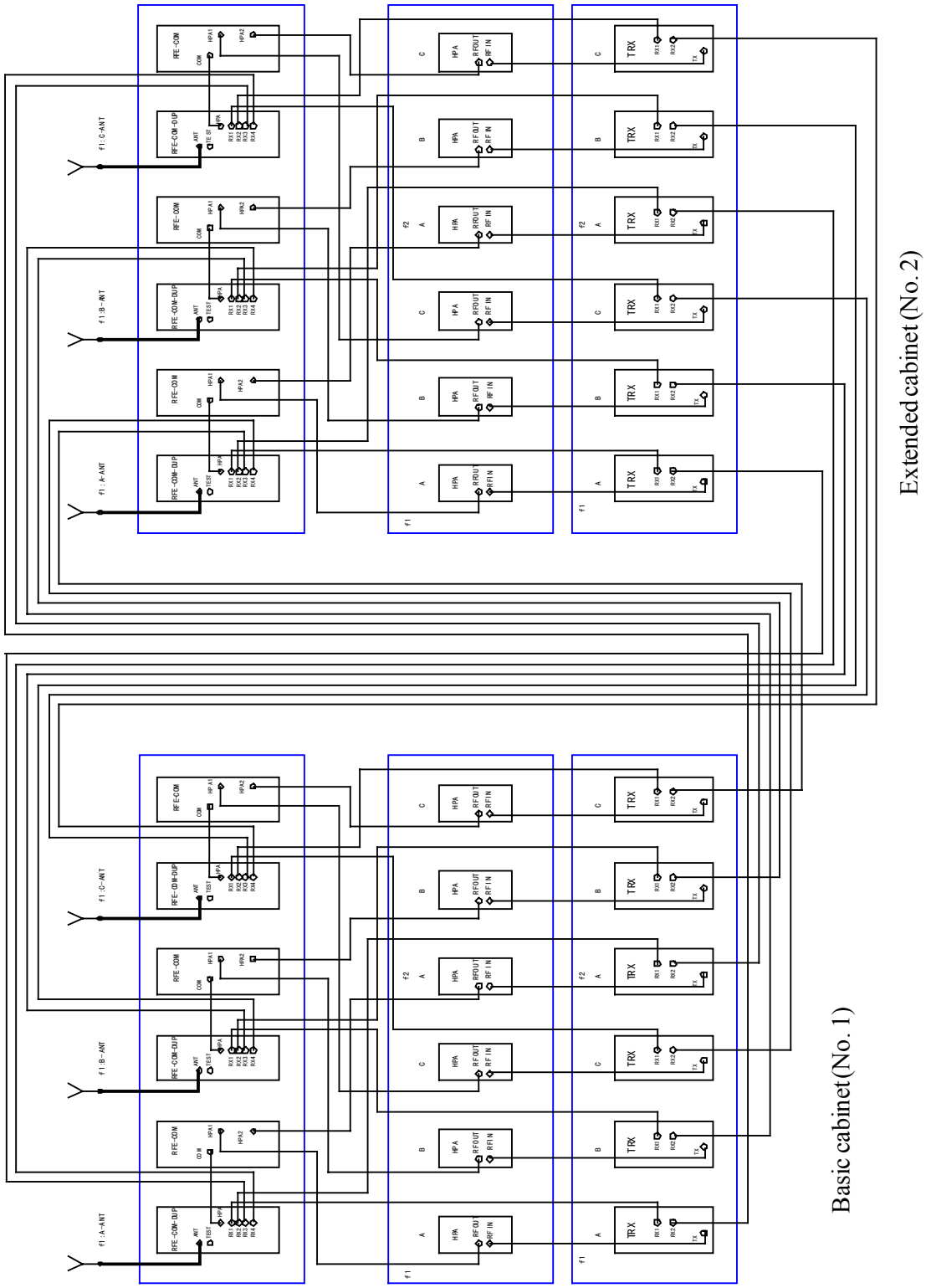

Fig. 7.3-3 Circuitry on the Front Panel of the Rack for the Four-carrier Three-sector BTS

2. Cabling of the front panel

Fig. 7.3-4 shows the wiring of the front panel for the rack of the four-carrier three-sector BTS.

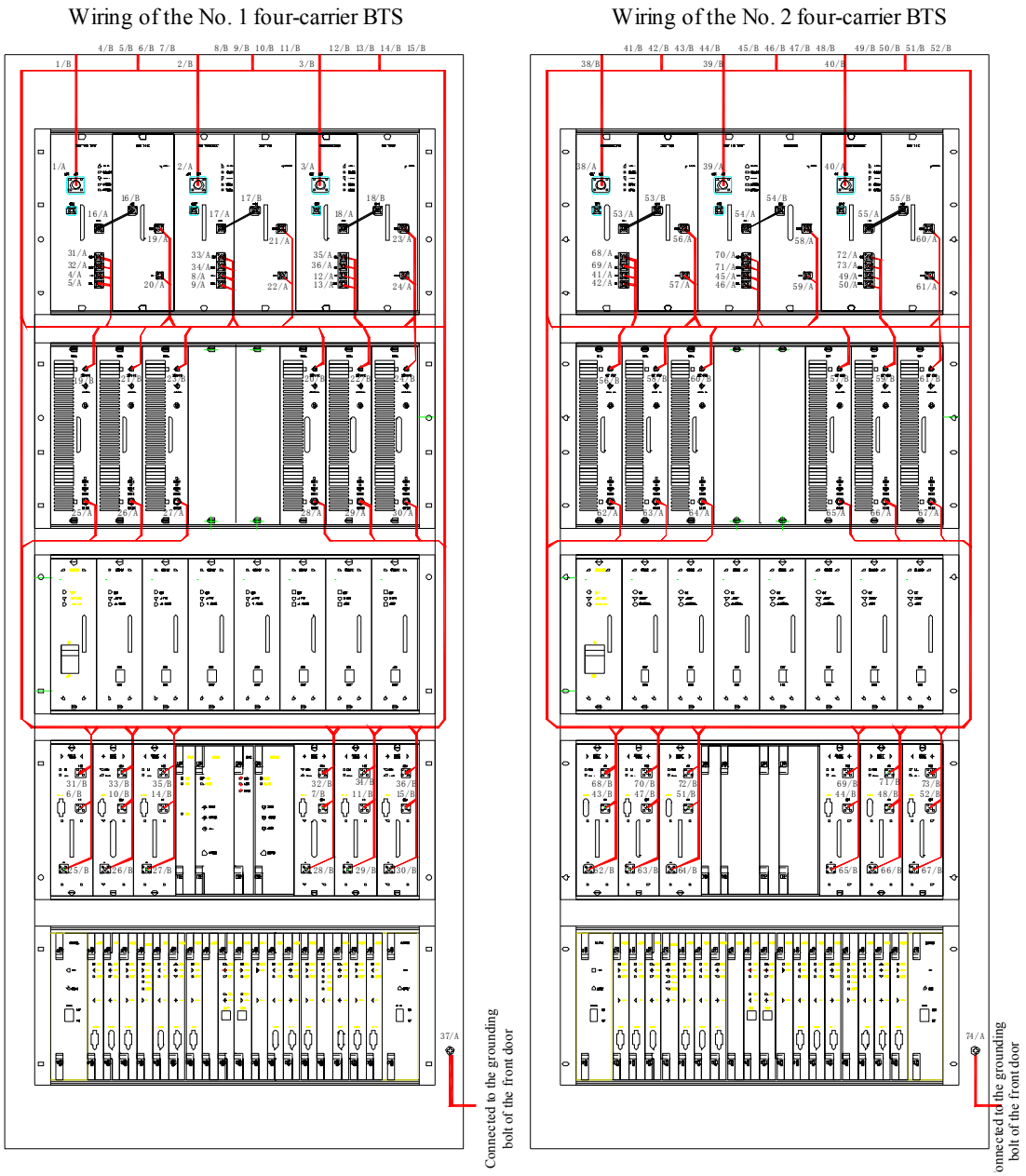

Fig. 7.3-4 Front Panel Wiring for the Rack of the Four-carrier Three-sector BTS

3. The wiring of the front panel is further described in Table 7.3-2.

Table 7.3-2 Wiring List of the Front Panel for the 1# Four-carrier BTS Cabinet

No.	Cable Name and Code	Length (mm)	End A Direction	End B Direction
	RFE RF cables			
1	RFE/01(02) -250(220)	250(220)	1#BTS-RFE-RFE1-ANT	1#BTS – set top ANT1
2	RFE/01(02) -250(220)	250(220)	1#BTS-RFE-RFE3-ANT	1#BTS - set top ANT3
3	RFE/01(02) -250(220)	250(220)	1#BTS-RFE-RFE5-ANT	1#BTS - set top ANT5
	RF08 RF cables			
4	RF08/01-850	850	1#BTS-RFE-RFE1-RX3	1#BTS – set top ANT2 - RFE
5	RF08/01-850	850	1#BTS-RFE-RFE1-RX4	1#BTS – set top ANT2 - RFE
6	RF08/05-1600	1600	1#BTS-TRX-TRX1-RX2	1#BTS – set top ANT2 - TRX
7	RF08/08-2000	2000	1#BTS-TRX-TRX4-RX2	1#BTS – set top ANT2 - TRX
8	RF08/03-1300	1300	1#BTS-RFE-RFE3-RX3	1#BTS - set top ANT4 - RFE
9	RF08/03-1300	1300	1#BTS-RFE-RFE3-RX4	1#BTS - set top ANT4 - RFE
10	RF08/07-1900	1900	1#BTS-TRX-TRX2-RX2	1#BTS – set top ANT4 - TRX
11	RF08/06-1700	1700	1#BTS-TRX-TRX5-RX2	1#BTS – set top ANT4 - TRX
12	RF08/02-950	950	1#BTS-RFE-RFE5-RX3	1#BTS – set top ANT6 - RFE
13	RF08/02-950	950	1#BTS-RFE-RFE5-RX4	1#BTS – set top ANT6 - RFE
14	RF08/08-2000	2000	1#BTS-TRX-TRX3-RX2	1#BTS – set top ANT6 - TRX
15	RF08/04-1450	1450	1#BTS-TRX-TRX6-RX2	1#BTS – set top ANT6 - TRX
	RF07 RF cables			
16	RF07	50.5	1#BTS-RFE-RFE1-HPA	1#BTS-RFE-RFE2-COM
17	RF07	50.5	1#BTS-RFE-RFE3-HPA	1#BTS-RFE-RFE4-COM
18	RF07	50.5	1#BTS-RFE-RFE5-HPA	1#BTS-RFE-RFE6-COM
	RF06 RF cables			
19	RF06/02-370	370	1#BTS-RFE-RFE2-HPA1	1#BTS-HPA-HPA1-RF-OUT
20	RF06/09-400	400	1#BTS-RFE-RFE2-HPA2	1#BTS-HPA-HPA4-RF-OUT
21	RF06/03-480	480	1#BTS-RFE-RFE4-HPA1	1#BTS-HPA-HPA2-RF-OUT
22	RF06/08-320	320	1#BTS-RFE-RFE4-HPA2	1#BTS-HPA-HPA5-RF-OUT
23	RF06/10-600	600	1#BTS-RFE-RFE6-HPA1	1#BTS-HPA-HPA3-RF-OUT
24	RF06/07-180	180	1#BTS-RFE-RFE6-HPA2	1#BTS-HPA-HPA6-RF-OUT
25	RF06/04-800	800	1#BTS-HPA-HPA1-RF-IN	1#BTS-TRX-TRX1-TX
26	RF06/05-930	930	1#BTS-HPA-HPA2-RF-IN	1#BTS-TRX-TRX2-TX
27	RF06/06-1050	1050	1#BTS-HPA-HPA3-RF-IN	1#BTS-TRX-TRX3-TX
28	RF06/06-1050	1050	1#BTS-HPA-HPA4-RF-IN	1#BTS-TRX-TRX4-TX
29	RF06/05-930	930	1#BTS-HPA-HPA5-RF-IN	1#BTS-TRX-TRX5-TX

No.	Cable Name and Code	Length (mm)	End A Direction	End B Direction
30	RF06/04-800	800	1#BTS-HPA-HPA6-RF-IN	1#BTS-TRX-TRX6-TX
	RF01 RF cables			
31	RF01/07-1050	1050	1#BTS-RFE-RFE1-RX1	1#BTS-TRX-TRX1-RX1
32	RF01/17-1330	1330	1#BTS-RFE-RFE1-RX2	1#BTS-TRX-TRX4-RX1
33	RF01/09-1300	1300	1#BTS-RFE-RFE3-RX1	1#BTS-TRX-TRX2-RX1
34	RF01/09-1300	1300	1#BTS-RFE-RFE3-RX2	1#BTS-TRX-TRX5-RX1
35	RF01/11-1400	1400	1#BTS-RFE-RFE5-RX1	1#BTS-TRX-TRX3-RX1
36	RF01/15-1100	1100	1#BTS-RFE-RFE5-RX2	1#BTS-TRX-TRX6-RX1
	Grounding cables of the door			
37	JDX	250	Grounding screw of the BTS frame	Grounding screw of the front door
	RFE RF cables			
38	RFE/01(02) -250(220)	250(220)	2#BTS-RFE-RFE1-ANT	2#BTS - set top ANT1
39	RFE/01(02) -250(220)	250(220)	2#BTS-RFE-RFE3-ANT	2#BTS - set top ANT3
40	RFE/01(02) -250(220)	250(220)	2#BTS-RFE-RFE5-ANT	2#BTS - set top ANT5
	RF08 RF cables			
41	RF08/01-850	850	2#BTS-RFE-RFE1-RX3	2#BTS - set top ANT2 - RFE
42	RF08/01-850	850	2#BTS-RFE-RFE1-RX4	2#BTS - set top ANT2 - RFE
43	RF08/05-1600	1600	2#BTS-TRX-TRX1-RX2	2#BTS – set top ANT2 - TRX
44	RF08/08-2000	2000	2#BTS-TRX-TRX4-RX22	2#BTS – set top ANT2 - TRX
45	RF08/03-1300	1300	2#BTS-RFE-RFE3-RX3	2#BTS - set top ANT4 - RFE
46	RF08/03-1300	1300	2#BTS-RFE-RFE3-RX4	2#BTS - set top ANT4 - RFE
47	RF08/07-1900	1900	2#BTS-TRX-TRX2-RX2	2#BTS – set top ANT4 - TRX
48	RF08/06-1700	1700	2#BTS-TRX-TRX5-RX2	2#BTS – set top ANT4 - TRX
49	RF08/02-950	950	2#BTS-RFE-RFE5-RX3	2#BTS – set top ANT6 - RFE
50	RF08/02-950	950	2#BTS-RFE-RFE5-RX4	2#BTS – set top ANT6 - RFE
51	RF08/08-2000	2000	2#BTS-TRX-TRX3-RX2	2#BTS – set top ANT6 - TRX
52	RF08/04-1450	1450	2#BTS-TRX-TRX6-RX2	2#BTS – set top ANT6 - TRX
	RF07 RF cables			
53	RF07	50.5	2#BTS-RFE-RFE1-HPA	2#BTS-RFE-RFE2-COM
54	RF07	50.5	2#BTS-RFE-RFE3-HPA	2#BTS-RFE-RFE4-COM
55	RF07	50.5	2#BTS-RFE-RFE5-HPA	2#BTS-RFE-RFE6-COM
	RF06 RF cables			
56	RF06/02-370	370	2#BTS-RFE-RFE2-HPA1	2#BTS-HPA-HPA1-RF-OUT

No.	Cable Name and Code	Length (mm)	End A Direction	End B Direction
57	RF06/09-400	400	2#BTS-RFE-RFE2-HPA2	2#BTS-HPA-HPA4-RF-OUT
58	RF06/03-480	480	2#BTS-RFE-RFE4-HPA1	2#BTS-HPA-HPA2-RF-OUT
59	RF06/08-320	320	2#BTS-RFE-RFE4-HPA2	2#BTS-HPA-HPA5-RF-OUT
60	RF06/10-600	600	2#BTS-RFE-RFE6-HPA1	2#BTS-HPA-HPA3-RF-OUT
61	RF06/07-180	180	2#BTS-RFE-RFE6-HPA2	2#BTS-HPA-HPA6-RF-OUT
62	RF06/04-800	800	2#BTS-HPA-HPA1-RF-IN	2#BTS-TRX-TRX1-TX
63	RF06/05-930	930	2#BTS-HPA-HPA2-RF-IN	2#BTS-TRX-TRX2-TX
64	RF06/06-1050	1050	2#BTS-HPA-HPA3-RF-IN	2#BTS-TRX-TRX3-TX
65	RF06/06-1050	1050	2#BTS-HPA-HPA4-RF-IN	2#BTS-TRX-TRX4-TX
66	RF06/05-930	930	2#BTS-HPA-HPA5-RF-IN	2#BTS-TRX-TRX5-TX
67	RF06/04-800	800	2#BTS-HPA-HPA6-RF-IN	2#BTS-TRX-TRX6-TX
	RF01 RF cables			
68	RF01/07-1050	1050	2#BTS-RFE-RFE1-RX1	2#BTS-TRX-TRX1-RX1
69	RF01/17-1330	1330	2#BTS-RFE-RFE1-RX2	2#BTS-TRX-TRX4-RX1
70	RF01/09-1300	1300	2#BTS-RFE-RFE3-RX1	2#BTS-TRX-TRX2-RX1
71	RF01/09-1300	1300	2#BTS-RFE-RFE3-RX2	2#BTS-TRX-TRX5-RX1
72	RF01/11-1400	1400	2#BTS-RFE-RFE5-RX1	2#BTS-TRX-TRX3-RX1
73	RF01/15-1100	1100	2#BTS-RFE-RFE5-RX2	2#BTS-TRX-TRX6-RX1
	Grounding cables of the door			
74	JDX	250	Grounding screw of the BTS frame	Grounding screw of the front door

7.3.3 Connecting the Jumper Cables Between the Basic Cabinet and the Extended Cabinet

Table 7.3-3 shows the wiring of the jumper cables between the basic cabinet and the extended cabinet.

Table 7.3-3 Wiring List of the Cables from 1# Multi-carrier BTS Cabinet to 2# Multi-carrier BTS Cabinet

No.	Cable Name and Code	Length (mm)	End A Direction	End B Direction
	F-LINK-003 cable			
1	F-LINK-003	Depends on the project	1# set top reserved IO	2# set top reserved IO
	10M cable			
2	10M cable suite	Depends on the project	1# set top GPS2	2# set top GPS2

No.	Cable Name and Code	Length (mm)	End A Direction	End B Direction
	RF cables			
3	RF cable suite	Depends on the project	1#BTS – set top ANT2 - RFE	2#BTS – set top ANT2 - TRX
4	RF cable suite		1#BTS – set top ANT2 - RFE	2#BTS – set top ANT2 - TRX
5	RF cable suite		1#BTS – set top ANT2 - TRX	2#BTS - set top ANT2 - RFE
6	RF cable suite		1#BTS – set top ANT2 - TRX	2#BTS - set top ANT2 - RFE
7	RF cable suite		1#BTS - set top ANT4 - RFE	2#BTS – set top ANT4 - TRX
8	RF cable suite		1#BTS - set top ANT4 - RFE	2#BTS – set top ANT4 - TRX
9	RF cable suite		1#BTS – set top ANT4 - TRX	2#BTS - set top ANT4 - RFE
10	RF cable suite		1#BTS – set top ANT4 - TRX	2#BTS - set top ANT4 - RFE
11	RF cable suite		1#BTS – set top ANT6 - RFE	2#BTS – set top ANT6 - TRX
12	RF cable suite		1#BTS – set top ANT6 - RFE	2#BTS – set top ANT6 - TRX
13	RF cable suite		1#BTS – set top ANT6 - TRX	2#BTS – set top ANT6 - RFE
14	RF cable suite		1#BTS – set top ANT6 - TRX	2#BTS – set top ANT6 - RFE

7.3.4 Connecting the Backplane Signal Cables of the BTS Rack

For three-carrier BTS and four-carrier BTS, the extended rack does not contain the GCM and the DSM. Therefore, the signal transmission is made from the basic rack to the extended rack through the rack top jumpers.

1. Connecting the backplane clock cables of the basic rack

   Fig. 7.3-5 Structure of the LINK Cable

   The structure of the backplane clock cable (LINK cable) in the basic rack is shown in Fig. 7.3-5.

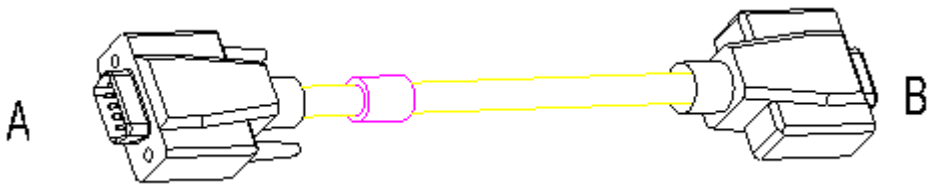

Fig. 7.3-5 Structure of the LINK Cable

Table 7.3-4 IDs of the LINK Directions

Cable Name and Code	To End A	To End B
LINK cable	1#BTS-BBDS4-X70(CLK_MBTS)	1#BTS rack top-MBDS_SBDS
LINK cable	2#BTS-BBDS4-X70(CLK_SBTS)	2#BTS rack top-MBDS_SBDS

The LINK cables distribute the IP extension cascade clock and control signals (one for MBTS output and one for SBTS input) to rack top for cabinet combination purpose. Definition of signals:

I_30M+_MBTS I_30M-_MBTS: The 30M differential MLVDS digital clock from MBTS_CDM input to the SBTS rack

I_CHIP+_MBDS I_CHIP-_MBDS: The 16CHIP differential MLVDS clock from MBDS_GCM output to RIM of SBDS

I_PP2S+_MBDS I_PP2S-_MBDS: The PP2S differential MLVDS clock from MBDS_GCM output to RIM of SBDS

2. Clock signal jumpers between racks

The structure of the DB9 clock cable LINK between the basic and extended racks is shown in Fig. 7.3-6.

Fig. 7.3-6 LINK Cable Structure

The backplane LINK cable of the extended multi-carrier rack is the rack top jumper.

7.4 T1 Cabke

7.4.1 Functions

Abis interface adopts T1 cable as the 100Ω coaxial cable and connects the T1 interface of board DSM to set top. The characteristic resistance of T1 cable is consistent with the input and output resistance of the line transceiver set by the transceiver of board T1.

7.4.2 Connection Position of Two Ends, Wiring and Signal Flow Direction of Cable

One end of the T1 cable is connected with the D-shape 44-core connector on the backplane of BDS frame, while the other end is fixed on the transfer installation hole of set top.

When DSM is configured as 100ΩT1, a D-shape 44-core connector is adopted on the backplane of BDS frame. 8-channel T1 is supported; meanwhile extended 8-channel T1 is provided. The system supports maximum 16-channel T1.

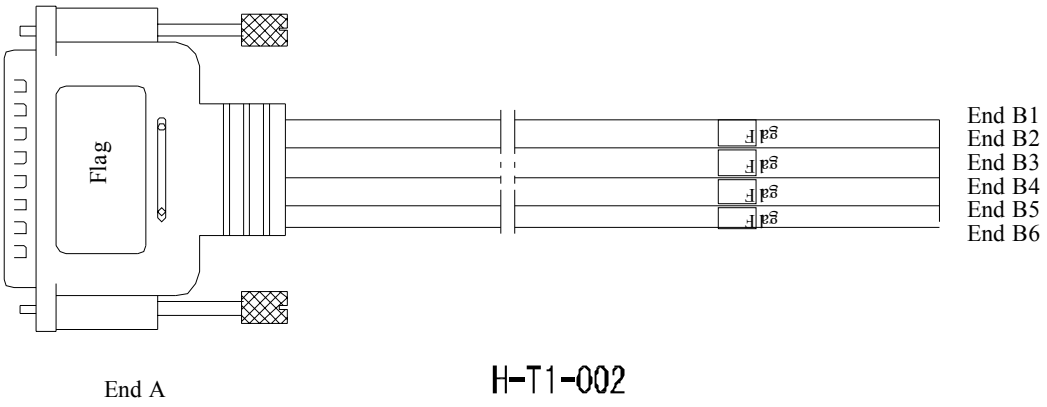

Fig. 7.4-1 100ΩT1 Cable Diagram

Table 7.4-1 100ΩT1 Cable Wiring and Signal Flow Direction

Serial No.	End A Outgoing Direction Flag	End B Outgoing Direction Flag
1	BTS-BBDS4-IP_X71 (BSC_T1) BTS-BBDS4-IP_X76	B1:BTS set top-BSC(EXT)_T1_0(IN0)
		B2:BTS set top-BSC(EXT)_T1_0(OUT0)
		B3:BTS set top-BSC(EXT)_T1_1(IN1)

Serial No.	End A Outgoing Direction Flag	End B Outgoing Direction Flag
	(EXT_T1)	B4:BTS set top-BSC(EXT)_T1_1(OUT1)
		B5:BTS set top- BSC(EXT)_T1_2(IN2)
		B6:BTS set top- BSC(EXT)_T1_2(OUT2)
		B7:BTS set top- BSC(EXT)_T1_3(IN3)
		B8:BTS set top- BSC(EXT)_T1_3(OUT3)
		B9:BTS set top- BSC(EXT)_T1_4(IN4)
		B10:BTS set top- BSC(EXT)_T1_4(OUT4)
		B11:BTS set top- BSC(EXT)_T1_4(IN5)
		B12:BTS set top- BSC(EXT)_T1_5(OUT5)
		B13:BTS set top- BSC(EXT)_T1_6(IN6)
		B14:BTS set top- BSC(EXT)_T1_6(OUT6)
		B15:BTS set top- BSC(EXT)_T1_7(IN7)
		B16:BTS set top- BSC(EXT)_T1_7(OUT7)

Note: The T1 cable at the extended interface is selected according to the contract. Normally it is not configured.

7.4.3 Function

The T1 cable used at the Abis interface is the 100Ω coaxial cable twisted pair. It connects the board interfaces to the rack top. The characteristic impedance of the T1 cable is the same as the input/output impedance of the line transceiver set for the board's T1 transceiver.

7.4.4 Connection Positions of Both Ends, Cabling and Signal Flow Direction of Cables

One end of the T1 cable connects to the connector on the backplane of the IP_BDS shelf, and the other connects to the conversion card at the rack top.

If the 100Ω T1 is used, then the DB44 high-density connector should be employed on the backplane of the IP_BDS shelf, while the CC4 standard T1 coaxial socket should be employed to connect the conversion card, as shown in Fig. 7.4-1 and Table 7.4-1.

On the BTS rack top, there are totally 16 T1 interfaces marked as "BSC_IP_T1-0-7" and "EXT_IP_T1-0-7" (100Ω cable terminals are shown in). 8 out of the 16 are active for connecting with the BSC. The rest T1 interfaces are standby or will be used for the daisy chain configuration of a BTS.

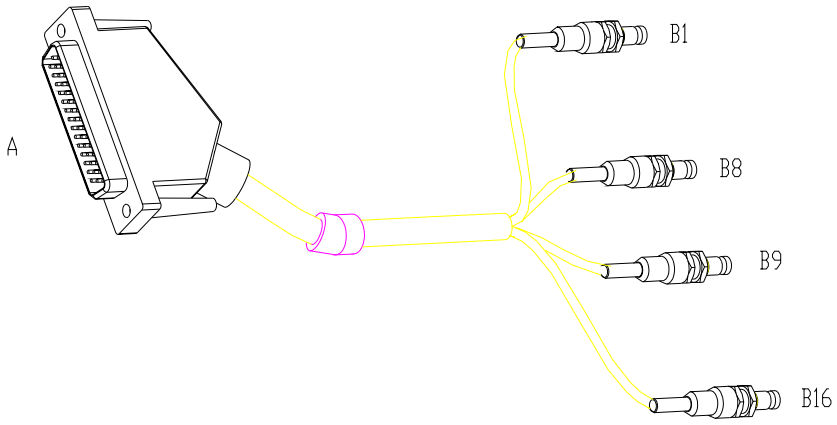

Fig. 7.4-1 Terminals of the 100Ω Cable

Table 7.4-1 Identifiers of the Location & Signal Flow Direction at Both Ends of the 100Ω Cable

Cable Name	End A Direction	End B Direction
E1	A: BTS-BBDS-IP_X71(BSC_E1)	B1: BSC-IP_T1_0-IN0
		B2: BSC-IP_T1_0-OUT0
		B3: BSC-IP_T1_1-IN1
		B4: BSC-IP_T1_1-OUT1
		B5: BSC-IP_T1_2-IN2
		B6: BSC-IP_T1_2-OUT2
		B7: BSC-IP_T1_3-IN3
		B8: BSC-IP_T1_3-OUT3
		B9: BSC-IP_T1_4-IN4
		B10: BSC-IP_T1_4-OUT4
		B11: BSC-IP_T1_5-IN5
		B12: BSC-IP_T1_5-OUT5
		B13: BSC-IP_T1_6-IN6
		B14: BSC-IP_T1_6-OUT6
		B15: BSC-IP_T1_7-IN7
		B16: BSC-IP_T1_7-OUT7
	A: BTS-BBDS-IP_X76(EXT_T1)	B1: EXT-IP-T1_0-IN0
		B2: EXT-IP T1_0-OUT0

Cable Name	End A Direction	End B Direction
		B3: EXT-IP_T1_1-IN1
		B4: EXT-IP_T1_1-OUT1
		B5: EXT-IP_T1_2-IN2
		B6: EXT-IP_T1_2-OUT2
		B7: EXT-IP_T1_3-IN3
		B8: EXT-IP_T1_3-OUT3
		B9: EXT-IP_T1_4-IN4
		B10: EXT-IP_T1_4-OUT4
		B11: EXT-IP_T1_5-IN5
		B12: EXT-IP_T1_5-OUT5
		B13: EXT-IP_T1_6-IN6
		B14: EXT-IP_T1_6-OUT6
		B15: EXT-IP_T1_7-IN7
		B16: EXT-IP_T1_7-OUT7

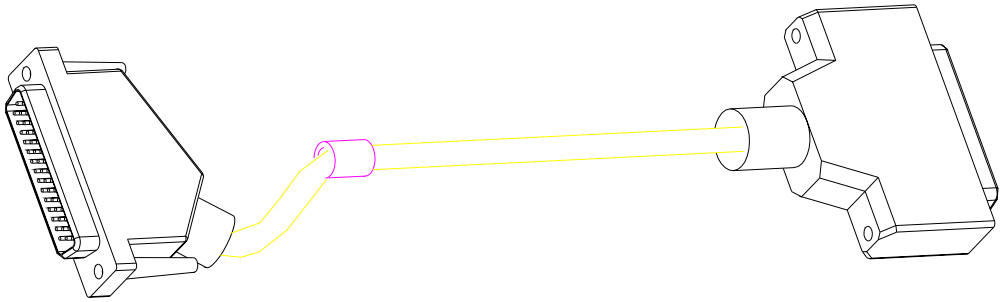

Fig. 7.4-2 120 Ω Cable

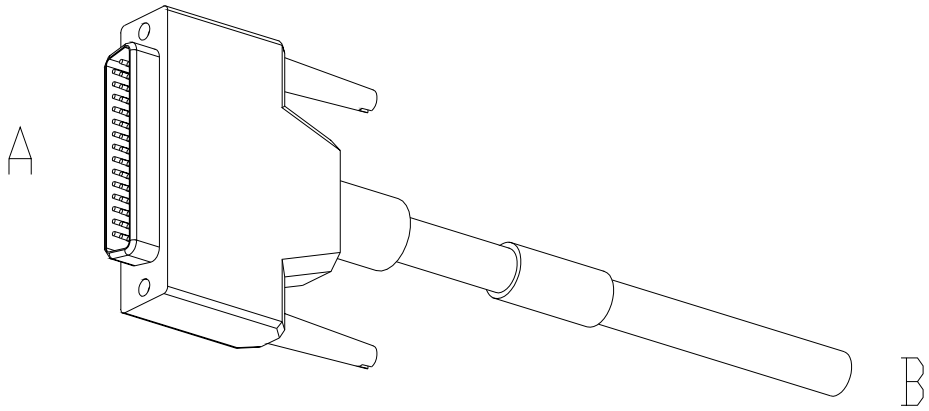

Fig. 7.4-3 120 Ω T1 Conversion Cable

Table 7.4-2 End B Braiding Pair Sequence of the 120 Ω T1 Conversion Cable

End B Braiding Pair Sequence	1(IN0)	2(OUT0)	3(IN1)	4(OUT1)	5(IN2)	6(OUT2)	7(IN3)	8(OUT3)
	Blue/1red Blue/1black	Pink/1red Pink/1black	Green/1red Green/1black	Yellow/1red Yellow/1black	Grey/1red Grey/1black	Blue/2red Blue/2black	Pink/2red Pink/2black	Green/2red Green/2black
	9(IN4)	10(OUT4)	11(IN5)	12(OUT5)	13(IN6)	14(OUT6)	15(IN7)	16(OUT7)
	Yellow/2red Yellow/2black	Grey/2red Grey/2black	Blue/3red Blue/3black	Pink/3red Pink/3black	Green/3red Green/3black	Yellow/3red Yellow/3black	Grey/3red Grey/3black	Blue/4red Blue/4black

Note: Blue/1red means there is a red dot identifier on the blue line; while pink/2red means there are 2 red dot identifiers on the pink line.

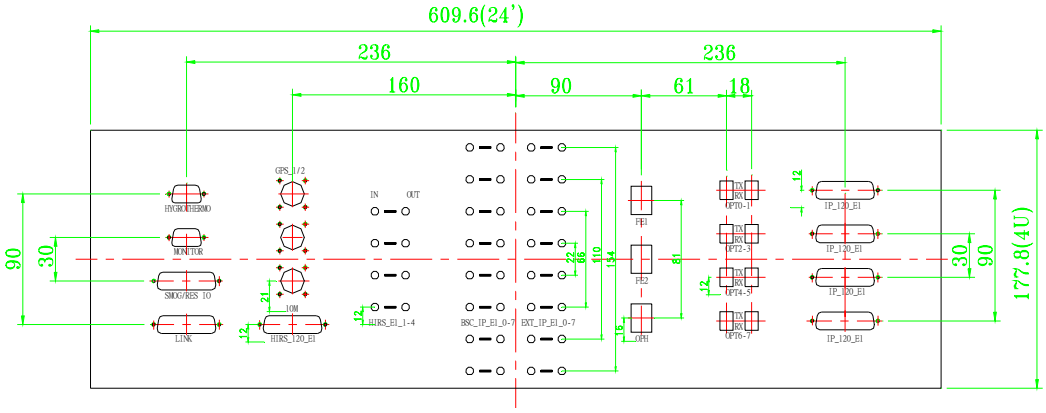

Fig. 7.4-4 BTS Rack-top Interface Board

8 Installing the Trunk Cables

🕮 Summary

This part describes:

- Installation method of the BTS trunk cables;
- Preparation procedure of the T1 cables.

8.1 Installing the Trunk Cables

The two T1 cable interfaces (marked T1-IN-1 and T1-OUT-1, terminals 13 and 14, on the BTS rack top are the active interfaces. The other T1 interfaces are standby interfaces or are used for the daisy chain connection of the BTS.

Follow the method given below in this section to assemble the CC4Y-J32 connector on the 100Ω coaxial cable and connect the cable end with the CC4Y-J32 connector to the set top.

According to the transmission equipment or DDF port configured for the BTS, select a proper coaxial connector and assemble it to the 100Ω coaxial cable to connect with the related port on the DDF or the transmission equipment. This coaxial connector is usually configured by the user.

8.2 Preparing the T1 cables

This section describes the preparation of the T1 cables.

1. Making the CC4Y-J32 connector for the T1 cable

   The method and procedure to make the connector at the ZXC10 BTSB I28A side is as shown in Fig. 8.2-1.

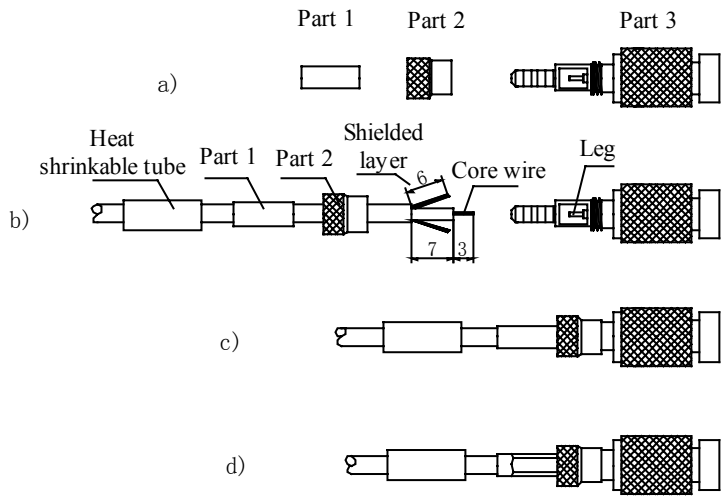

Fig. 8.2-1 Assembly Drawing of the CC4Y-J32 Coaxial Cable Connector

1) The plug parts of the CC4Y-J32 RF coaxial connector, as shown in a) of Fig. 8.2-1.

2) As shown in b) of Fig. 8.2-1, slip parts 1 and 2 around the cable, peel one end of the cable, tin the core wire, and then open the shielding layer forth to help inserting the plug crimping position.

3) After welding the core wire, screw parts 2 to parts 3, as shown in c) of Fig. 8.2-1.

4) Mount the crimping tube and crimp it with a special tool, as shown in d) of Fig. 8.2-1.

2. Making the coaxial connector plug at the DDF side

The structure of the connector is as shown in Fig. 8.2-2.

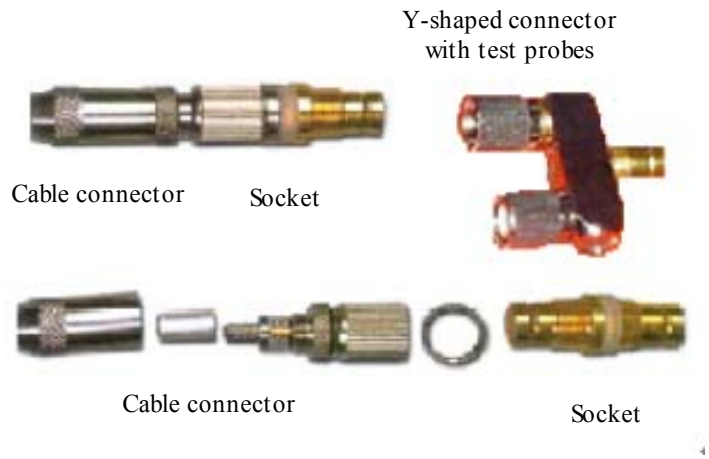

Fig. 8.2-2 Coaxial Connector of the DDF

Take the following steps to make the connector:

1) Peel the outer jacket of the cable for about 14mm, as shown in a} of Fig. 8.2-3.

2) Slip in sequence the cable connector sheath, the heat-shrink tube and the crimping tube. Open the shielding net forth with a net opening sleeve (or do it manually). And then strip the internal insulation layer to expose 3mm of the internal conductor, as shown in b) of Fig. 8.2-3.

3) As shown in c) of Fig. 8.2-3, insert the internal conductor into the connector. Note that the core wire must be inserted into the leg at the rear of the internal conductor. Weld the wire and cut the shielding net neatly to 6mm long.

4) Push the crimping tube and the shielding net to the end of the connector, as shown in d) of Fig. 8.2-3.

5) As shown in e) of Fig. 8.2-3, crimp the crimping tube into a cube with the crimping pliers. Note that crimp again in another direction after the first crimping.

6) As shown in f) of Fig. 8.2-3, slip the heat-shrink tube around the crimped crimping tube, and heat around it using a hot blower to make it shrink. And then screw the end sheath.

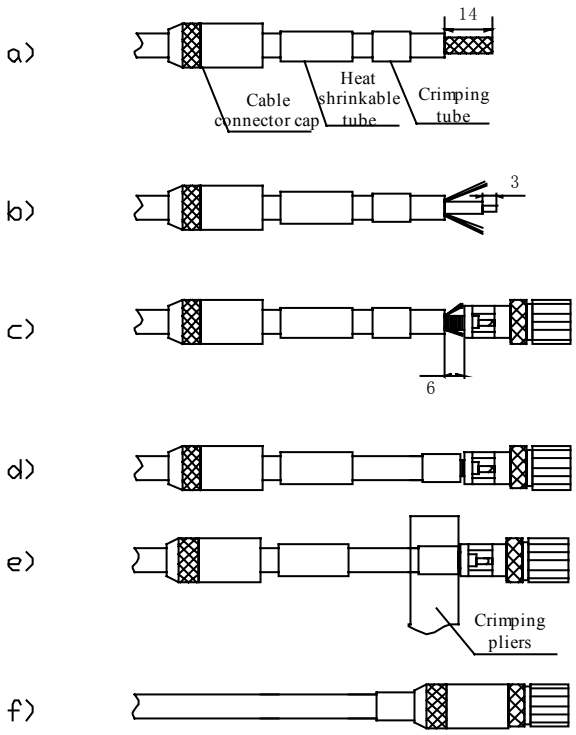

Fig. 8.2-3 Assembly Drawing of the Coaxial Cable Connector of DDF

3. Trunk cable test

The internal conductor of the connectors at both ends should be reliably welded to the internal conductor of the coaxial cable without any dry joint.

The internal conductors of the connectors at both ends have good continuity, and the external conductors have good continuity. Both the internal conductor and the external conductor cannot be short-circuited.

9 Installing the Monitoring System

🕮 Summary

This part describes:

- Composition of the monitoring system;
- Installation of the monitoring system.

9.1 Composition of the Monitoring System

The monitoring system consists of the smog sensor and the temperature/humidity sensor.

9.2 Installing the Monitoring System

9.2.1 Installing the Indoor Smog Sensor

The smog sensor should be installed on the ceiling as close to the rack as possible. The installation steps are as follows:

1. As shown in b) of Fig. 9.2-1, separate the upper part and the lower part of the smog sensor;
2. Connect the green and red wires (as shown in a) of Fig. 9.2-1) at end B of the 10m smog sensor cable to the two terminals marked 1 and 3 at the bottom of the smog sensor (as shown in c) of Fig. 9.2-1);
3. As shown in b) of Fig. 9.2-1, reassemble the upper and lower parts together;
4. Connect the DB25 plug at end A to the DB25 socket on the BTS set top ;
5. The terminal connection of the smog sensor cable connector is described in Table 9.2-1.

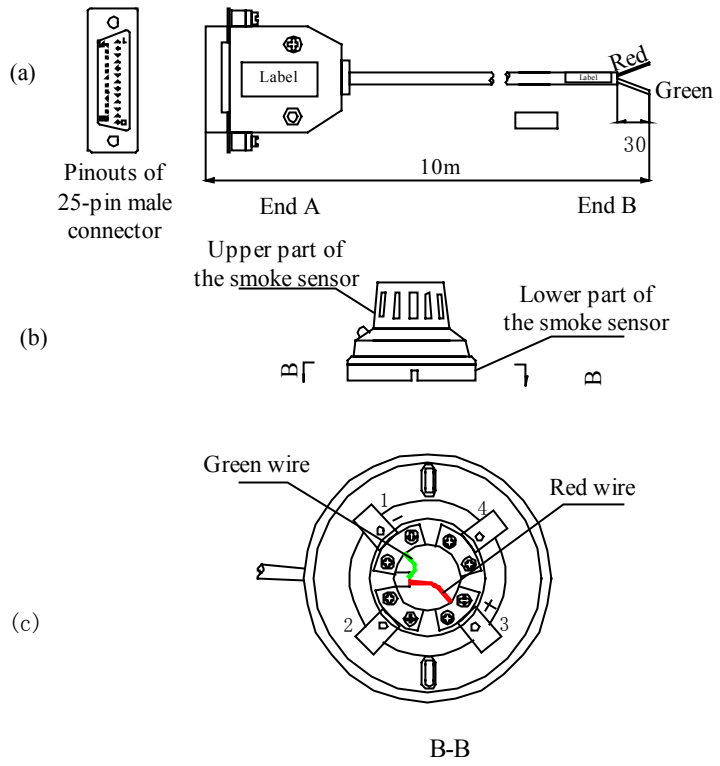

Fig. 9.2-1 Installing the Smog Sensor Base

Table 9.2-1 Terminal Connection of the Smog Sensor Cable Connector

Signal	25-pin Male Connector at End A	Cable Color	Smog Sensor Base at End B
+12V	10	Red	3(+)
-12V	11	Green	1(-)

9.2.2 Installing the Indoor Temperature/Humidity Sensor

The temperature/humidity sensor is mounted on the wall. Select a proper position on the wall in the equipment room, drill a hole of Φ6, put in a rubber cork, tighten the captive screw, and finally hang the sensor on the wall through the hole. The dimensions of the sensor is as shown in b of Fig. 9.2-2.

Both ends of the sensor connection line are DB9 connectors. As shown in a of Fig. 9.2-2, connect the DB9 male connector at end A to the DB9 socket, the temperature/humidity socket on the BTS set top. And connect the DB9 female connector at end B to the sensor.

The terminal connection of the cable connector is described in Table 9.2-2.

(a)

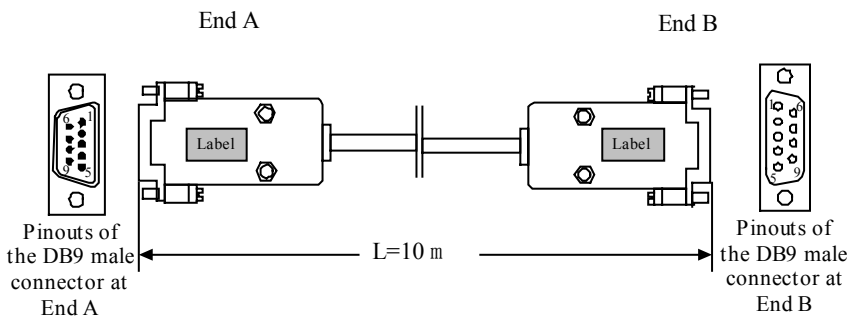

(b)

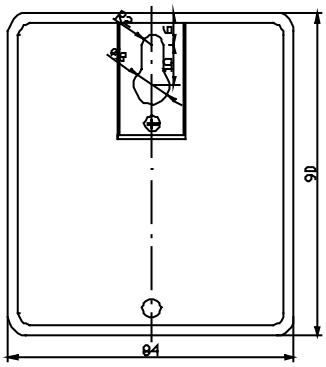

Fig. 9.2-2 Installing the Temperature/Humidity Sensor

Table 9.2-2 Terminal Connection of the Temperature/Humidity Sensor Cable Connector

Signal	Pin ID at End A	Cable Color	Pin ID at End B
HUM	1	White	3
TEMP	7	Blue	4
GND	3	White	1
+5V	8	Orange	5
	6	Shielded wire	

10 Installing the Main Antenna Feeder System

🕮 Summary

This part describes:

- Installation preparation for the BTS main antenna feeder system;
- Structure of the BTS main antenna feeder system;
- Installation content and flow of the BTS main antenna feeder system;
- Installation procedure of the parts of the BTS main antenna feeder system;
- Installation check and test of the antenna feeder system;
- Waterproof treatment of the connectors.

10.1 Installation Preparation for the Antenna Feeder System

This covers the preparations of staff, safety measures, tools and instruments, and technical documents, and the installation environment check.

The installation of the antenna feeder equipment is important to the installation of the BTS equipment. Its construction quality directly affects the operating performance of the entire BTS system. Most of the BTS installation engineering is the installation of the antenna feeder equipment that generally takes up 80% of the installation time of the whole BTS system. The installation of the antenna feeder equipment involves the installation of the antenna, the jumper, the routing of the main feeder, and the installation of the lightning protection system and the GPS system. Different antenna may be used due to different terrain, population density and installation environment.

The installation method and procedure differs. In the precondition of quality, the Installation Supervisor should install the antenna as per the actual situation flexibly and reasonably by following the BTS engineering design documents and the installation instructions of the special antenna provided by the manufacturer.

Prior to the installation of the antenna feeder system, inspect the qualification of the installation staff to work at heights, check and prepare the installation environment, the installation measures, the installation tools and the antenna feeder to be installed so that the installation can be carried out successfully.

10.1.1 Preparations for Installation Staff

Generally, the installation of antenna feeder system is supervised by the Installation Supervisor and carried out by the installation staff.

Requirements for the Installation Supervisor: He should be familiar with the materials, tools and operation methods used in the antenna feeder installation, and be responsible for organizing the installation staff and assigning proper tasks (especially working on the tower) to the staff in the principle of "Safety First". The Installation Supervisor should fill in the engineering data faithfully.

Requirements for the installation staff: Staff that can conduct the installation professionally under the instruction of the supervisor. The staff working at heights should have no acrophobia and be in good health. In addition, he should have the qualification and certificate for working at heights, observe the requirements for using the safety tools, have purchased life insurance policy, and should not drink.

10.1.2 Installation Environment Inspection

The environment inspection focuses on the following: The outdoor lightning protection grounding cable should be in place with the core diameter more than $50mm^2$. The distance between the antenna lightning arrester, the lightning protection grounding point, the outdoor cabling rack, and the antenna embracing pole should meet the design requirement. The strength and the wind-withstanding capability of the embracing pole should also meet the design requirements. Check the preparation of the compulsory tools and engineering auxiliary materials. Both parties should negotiate and define the specific routing of the main feeder.

As to the installation of the antenna support, the equipment supplier puts forward requirements for the antenna structure and dimensions, while the network operator completes the installation as parts of the equipment room accordingly.

The network operator is also responsible for the installation of the antenna feeder installation environment such as the outdoor cabling rack, the lightning arrester, the lightning protection grounding peg, and the outdoor lightning protection grounding cable. The construction of the wall or the hole on the roof for the feeder window where the main feeder enters the room involves the infrastructure of the equipment room. It should be completed as part of the equipment room by the network operator.

10.1.3 Safety Measures Inspection

Caution:

The staff working on the tower must wear the safety belt and must not wear loose clothes or slippery shoes, while the staff under the tower must wear the safety helmet.

1. Emphasize the safety precautions to the engineering staff.
2. The outdoor engineering of the antenna feeder should be conducted on a fine day without strong wind.
3. Distinct marks should be set up at the engineering site to keep off people irrelevant. The staff working under the tower have the obligation to clear the people irrelevant on-site, especially children, off the site. All the tools and instruments that might fall off the tower and hurt the personnel under the tower must be strictly handled. For example, the tools and metal installation parts that are temporarily not used on the tower should be put in a canvas tool bag. The bag should be closed once you take out the tool you need.

10.1.4 Preparation of Installation Tools

Installation tools comprise the following:

1. Measurement tools: Compass, multimeter, angle meter, tape;
2. Communication tools: Two MSs;
3. Hoisting tools: Pulley, rope to pull the main feeder;

4. Special tools: Main feeder cutter, special tools for preparing main feeder connectors;
5. General-purpose tools: Adjustable wrench, sharp-nose pliers, diagonal pliers, electrical knife, file, hacksaw;
6. Safety protection tools: Safety belt (used by engineering staff who step out of the platform on the tower), safety helmet, safety rope, thick uniform, RF-proof clothing, canvas tool bag, gloves, multi-purpose power socket;
7. Others: Standing ladder, wooden axle hoisting tool for the main feeder (this can be borrowed from the local user).

10.2 Structure of the Antenna Feeder System

As shown in Fig. 10.2-1, the antenna feeder system comprises antenna, antenna jumper, main feeder, lightning arrester, set top jumper, grounding parts and others.

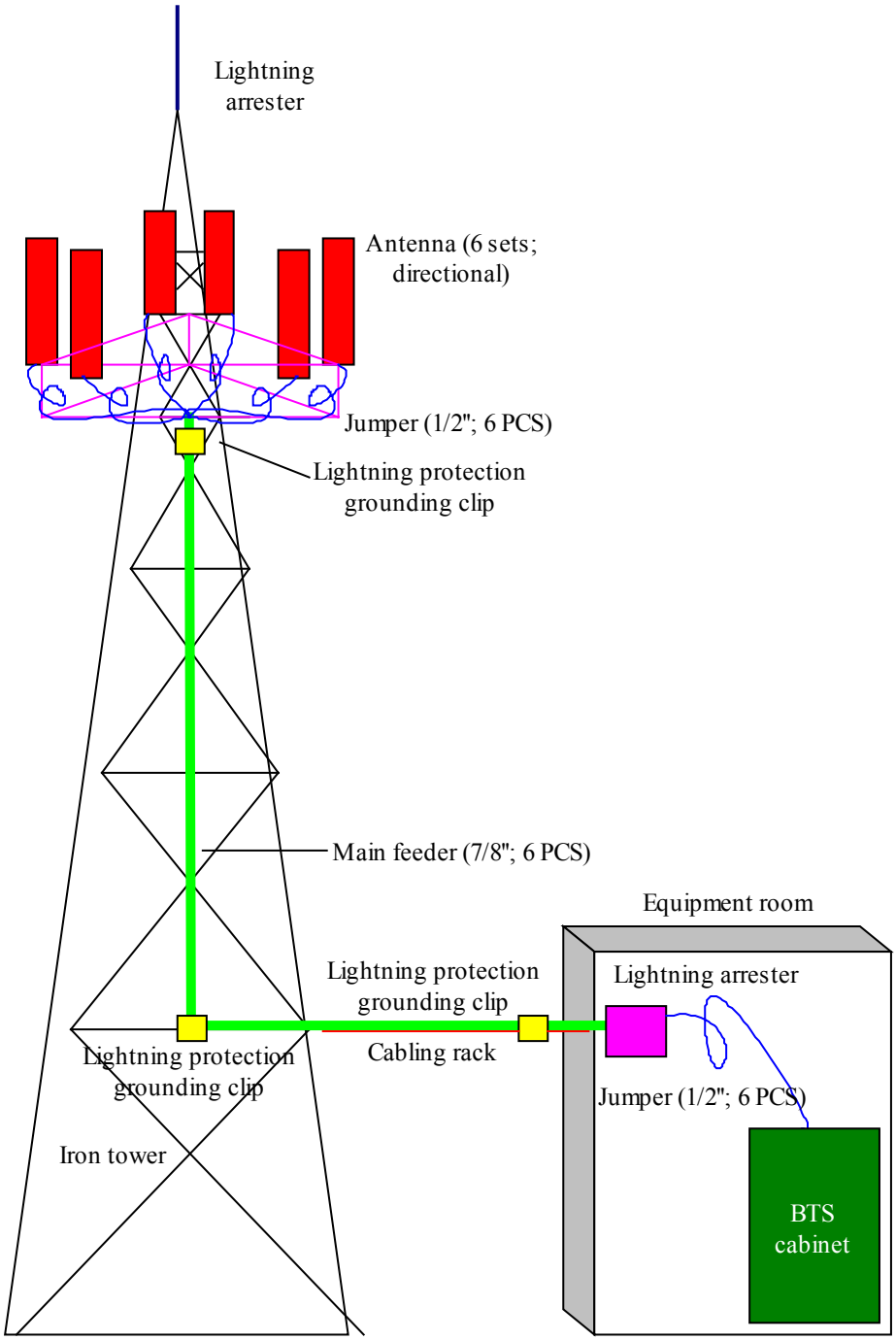

Fig. 10.2-1 Typical Structure of the Antenna Feeder System of Three-sector BTS

10.3 Installation Content and Flow

Caution:

1. Take careful precautions for the safety of yourself and the equipment during the whole antenna installation process;

2. When adjusting the antenna that is already working, take certain measures (for example, wear radiation-shielding clothing), and turn off the high power amplifier to avoid the direct radiation of the antenna to human body.

10.3.1 Technical Parameters for Antenna Installation

1. Antenna height

   It is determined by network planning.

2. Azimuth of antenna

   It is determined by network planning.

3. Pitch angle of antenna

   It is determined by network planning. Usually 0° ~ 10° adjustable.

4. Antenna direction

   It is determined by the azimuth of the antenna. Two antennas in the same sector should point to the same direction.

5. Distance between diversity antennas

   The two antennas in the same sector are diversity receiving antenna to each other with the same vertical height. The horizontal distance (d) is as large as possible to satisfy the engineering requirements just by following the formula below.

   $d \geq 10\sim20\lambda$ (or $H/d = 11$), where d is the horizontal distance between the diversity antennas, and H is the vertical height from the antenna to the floor. The diversity distance of the 1900M carrier should be more than 1.5m while that of the 800M carrier should be more than 3.5m.

10.3.2 Antenna Installation Flow

The antenna installation flow is shown in Fig. 10.3-1.

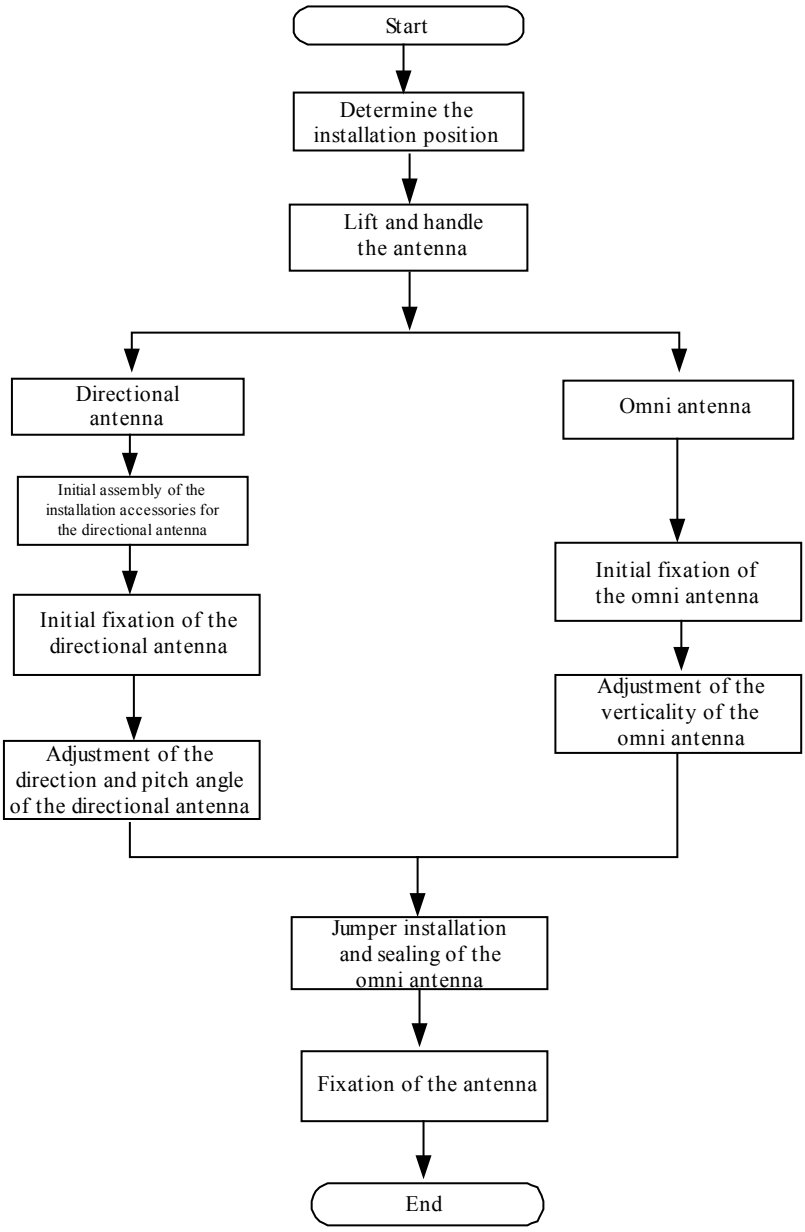

Fig. 10.3-1 Antenna Installation Flow

10.4 Installing the Antenna Parts

10.4.1 Determining the Antenna Installation Position

During the installation, the antenna installation position should be determined according to the antenna feeder installation drawing among the engineering design drawing. If the antenna support is installed in a place different as that shown in the engineering design drawing, second design should be done based on the network

coverage requirement of the local BTS, antenna diversity requirement, antenna azimuth and pitch angle. And design modification solution should be made then after consultation with the user representative and the design institution, lest the network coverage after the installation be affected.

10.4.2 Handling and Hoisting the Antenna

Caution:

Personnel both on and under the tower should coordinate to hoist the antenna. During the hoisting process, the personnel under the tower should pull the antenna away from the tower body by pulling the rope, lest the antenna be damaged due to crash with the tower body.

In the case the antenna is to be installed on the tower, use the rope and pulley block to hoist the antenna, the 3m antenna jumper and all the accessories (such as tools, safety belts, adhesive tapes and straps) to the tower-top platform and place them in a safe place. Take corresponding safety measures during the process. Small metal staff as antenna fixing parts and wrenches should be put in a sealed canvas tool bag before hoisting, as shown in Fig. 10.4-1.

Both ends of the directional antenna and the omni-antenna should be knotted for easy coordination of the staff both on and under the tower during the hoisting.

In the case the antenna is to be installed on the roof, move the antenna and the installation materials to the installation position manually.

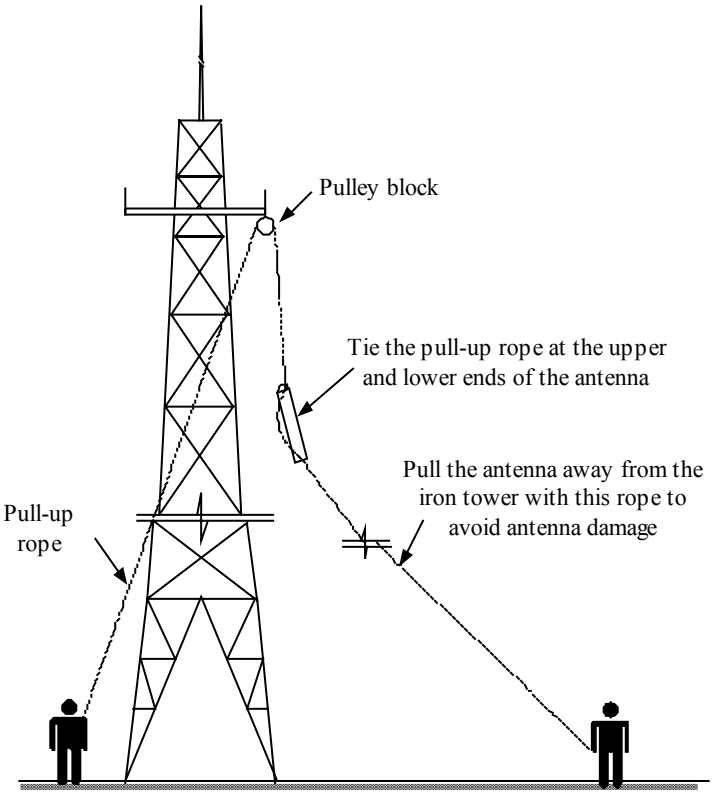

Fig. 10.4-1 Hoisting an Antenna

10.4.3 Installing and Adjusting the Directional Antenna

Note:

The installation methods of antennas of different models vary from one manufacturer to another. This section takes the Kathrein antenna as an example to describe the antenna installation process. Please carefully read the installation instructions provided along with the antenna during the installation and install the antenna as per the actual situation.

1. Initial assembly of the directional antenna fittings

   The directional antenna has a number of installation fasteners. For example, the Kathrein antenna has two types of fasteners: 738516 and 737974. Before fixing the antenna, assemble fastener 737974 to the ends of the antenna, as shown in Fig. 10.4-2, and then connect fasteners 737974 and 738516. Thus the initial installation of the directional antenna is complete. All accessories must be installed with spring and flat washers. Please refer to the instructions attached to

the product for descriptions of other fasteners for the antenna of other manufacturers or of Kathrein.

Usually the antenna fixing accessories and the angle adjustment device accessories have been installed on the antenna under the tower.

2. Initial fixing of the directional antenna on the antenna embracing pole

Mount the directional antenna installed with clamp accessories on the antenna embracing pole: The screw should not be too tight that you are unable to adjust the direction and the pitch angle of the antenna, nor too loose lest the antenna slip downward.

3. Adjusting the azimuth of the antenna

1) Determine the azimuth of the antenna using a compass. And determine the installation direction of the directional antenna according to the engineering design drawing;

2) Turn the antenna slightly to adjust its face direction, as shown in Fig. 10.4-2. At the same time measure the direction of the antenna with a compass till the error is within the engineering design requirements (generally not more than 5°);

3) After adjusting the azimuth of the antenna, tighten the fastener 738516.

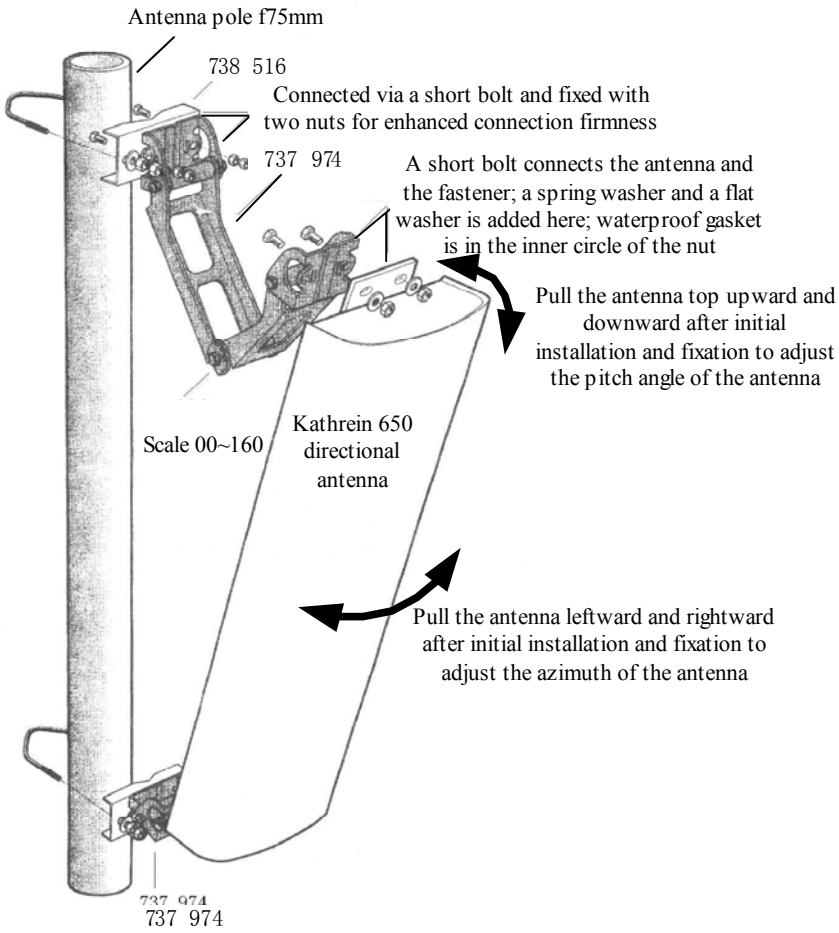

Fig. 10.4-2 Installing the Kathrein Antenna

4. Adjusting the pitch angle of the antenna

1) Adjust the pitch angle of the dip meter to the angle required by the engineering design;

2) Turn the top of the antenna slightly, let go or hold fast the antenna at its top. Adjust the pitch angle of the antenna till the bead is centered when the adjusted dip meter is next to the directional antenna, as shown in Fig. 10.4-3;

3) After adjusting the pitch angle of the antenna, tighten the fastener 737974.

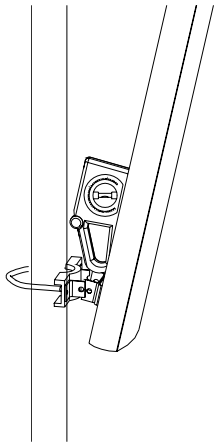

Fig. 10.4-3 Adjusting the Pitch Angle of the Antenna

10.4.4 Installing and Adjusting the Omni Antenna

Take the following steps to install the omni antenna:

1. Put the jacket at the antenna lower part close to the support backbone. The top of the jacket should be flush with or slightly higher than the support top;
2. Fix the jacket at the antenna lower part and the support backbone at two points with antenna fixing clips. They should be fixed tight enough to bear weight and withstand wind, and should not be too loose or too tight lest the antenna jacket be damaged.
3. Check the antenna verticality. The omni antenna must be vertical. Make sure the antenna is vertical, and then fix it to the antenna embracing pole.
4. Stick the support installed with the antenna out of the tower platform, and adjust the support to make the antenna vertical.

10.4.5 Connecting and Sealing the Jumper and the Antenna

Note:

The antenna and the jumper can be connected and waterproof treatment can be conducted on the joint before the antenna is fixed on the embracing pole. This can reduce the time working at heights and improve the joint connection and waterproof quality. The installation steps are as follows:

1. Align the connector of the antenna jumper to the antenna interface and screw it tightly.

2. Perform waterproof treatment to the joint (See section 10.6 "Waterproof Treatment on Joint" for details):

1) Wrap starting from the root of the antenna joint with waterproof adhesive tape in the same direction as the fastening direction of the antenna jumper;

2) Stretch the waterproof adhesive tape to double its length, and apply it layer by layer till it covers about 5cm of the bottom of the feeder joint. During the process, make sure the upper layer overlaps the lower layer by half the width of the tape.

3) Grip the tape with hands to make the tape tightly adhered;

4) Apply the PVC tape layer by layer on top of the waterproof adhesive tape. During the process, make sure the upper layer overlaps the lower layer by half the width of the tape.

10.4.6 Installing the Feeder Window

Note:

The feeder window provided by ZTE is a four-hole one with the dimensions of 400mm × 400mm. Altogether 12 feeders can go through the feeder window, and the dimensions of the cavity on the wall can be 300mm × 300mm. If the user provides a special feeder window, then make the wall cavity according to the actual dimensions of the feeder window.

The feeder window is usually mounted on the wall outside the equipment room between the indoor and the outdoor cabling racks.

If the main feeder window is to be installed on the building-top, sealing and waterproof treatment should be conducted on it. You may use asphalt or glass cement to seal the feeder window.

The feeder window has four or nine holes and the 4-hole feeder window is as shown in Fig. 10.4-4. Table 10.4-1 shows the specifications of varying feeder windows. Follow the steps below to install the feeder window:

1. Determine the installation position of the feeder window as required by the engineering design drawing;

2. Make a cavity on the wall according to the size of the feeder window;

3. Drill holes for the expansion bolts using a percussion drill and fix the main board of the feeder window with expansion bolts;
4. The sealing gasket and sealing tube of the feeder window can be installed when the main feeder is introduced into the room. See section 10.4.7.6 "Introducing the Main Feeder into the Equipment Room";
5. For cold areas with sand storms, even if the wall is thick, it is necessary to install timber baffle plates inside the equipment room to keep warm and keep sands outside.

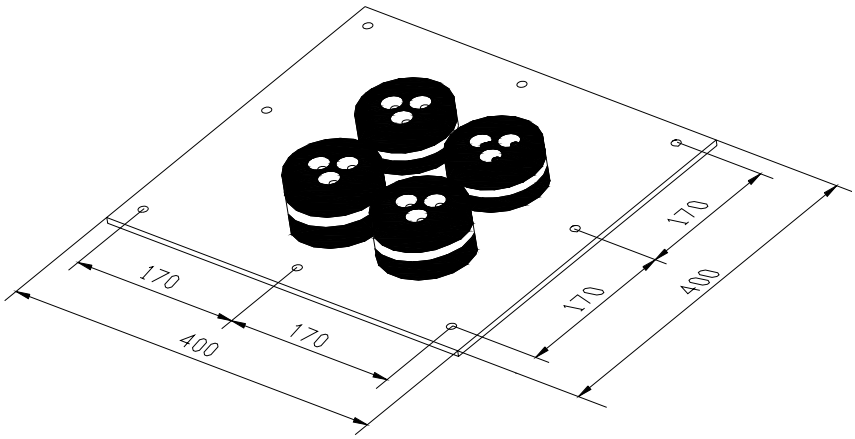

Fig. 10.4-4 Structure of the Feeder Window

Table 10.4-1 Model and Dimensions of the Feed Window

Model of feeder window	Dimensions	Smallest Hole Required	Preferred Hole Recommended
4 hole-5/4″ feeder window	400*400	240*240	300*300
9 hole-7/8″ feeder window	500*500	360*360	400*400
4 hole-7/8″ feeder window	400*400	240*240	280*280

10.4.7 Installing the Feeders

This section only describes the making of the 7/8" feeder connector, the connection and sealing of the jumper and the main feeder, the connection and sealing of the jumper and the antenna, and the layout and fixation of the feeder. It contains the following:

1. Determining and measuring the feeder route;

2. Hoisting and cutting the feeder, and labeling the feeder;
3. Making the feeder connector;
4. Distributing and fixing the feeder;
5. Installing the outdoor jumper and conducting waterproof treatment on the joint.

The overall structure of a BTS feeder is as shown in Fig. 10.4-5.

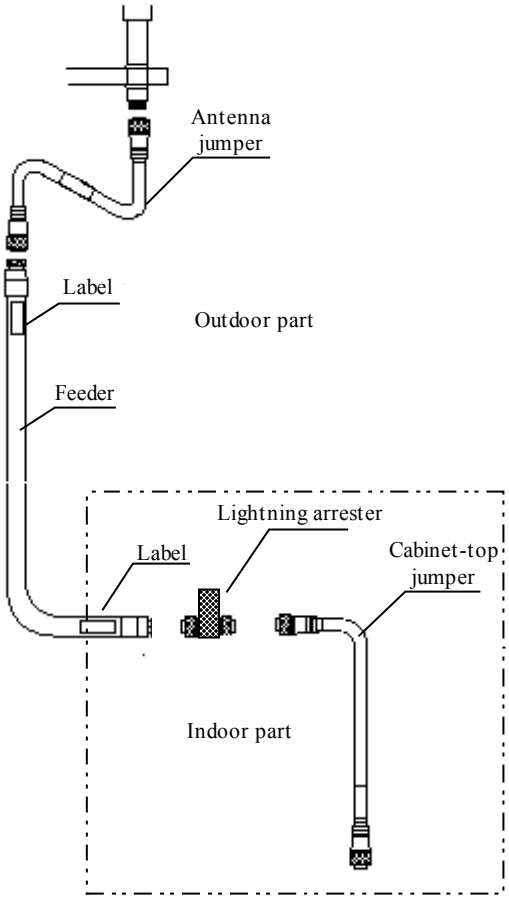

Fig. 10.4-5 Structure of a BTS Feeder

10.4.7.1 Determining the Feeder Routes

During the engineering installation phase, the layout of the feeder should be determined according to the feeder wiring drawing among the engineering design drawings. If the layout of the feeder need be modified as per the practical situation, you should consult the user representative and try to solve the problem as early as possible. Please note that the length of the main feeder should be as short as possible.

10.4.7.2 Preparing the Main Feeder Connectors

Caution:

The preparation of the feeder connector is the most important part in the antenna feeder installation engineering. The quality of the job directly affects the equipment operation and the network quality.

Since the cutting tool used is sharp, use it correctly to avoid body injury.

This section takes the Rosenberger 7/8" feeder connector as an example to describe the preparation process. For the installation of the feeder connector of other specifications or other manufacturers, please refer to their installation instructions.

Take the 7/8" main feeder connector as an example. The procedure to make the connector is as follows:

1. The common cutting tool to make the feeder connector is as shown in Fig. 10.4-6.

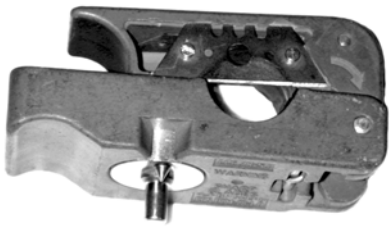

Fig. 10.4-6 Cutting Tool for the 7/8" Feeder Connector

2. Measure a straight feeder section of about 150mm to be installed with the connector, and cut and strip the feeder sheath 50mm away from the end using a safety cutting tool.
3. Put the feeder into the notch of the cutter (EASIAX), leaving a length of four sheath threads from the main blade. And then close the cutter handles. Since the position of the cutter is determined according to the threads on the external copper sheath of the feeder, the main blade should just be aligned to the crest at the center of a thread of the feeder.

4. Turn the cutter in the direction as marked on the cutter till the handles are completely closed and cut the internal and external copper conductors of the feeder completely. At the same time, the auxiliary blade of the cutter cuts the external plastic protection sheath of the feeder, as shown in Fig. 10.4-7.

Fig. 10.4-7 Cutting the Feeder with a Cutter

5. Check the cutting length of the feeder, as shown in Fig. 10.4-8.

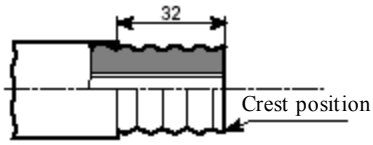

Fig. 10.4-8 Checking the Cutting Length of the Feeder

6. Separate the front part and back part of the feeder connector, and insert the back part into the feeder till it contacts with the first corrugation of the feeder.
7. Firmly insert the tube expander of the cutter into the feeder and turn it left and right to expand the external copper conductor of the feeder, so that it presses against the back part of the feeder connector, as shown in Fig. 10.4-9.

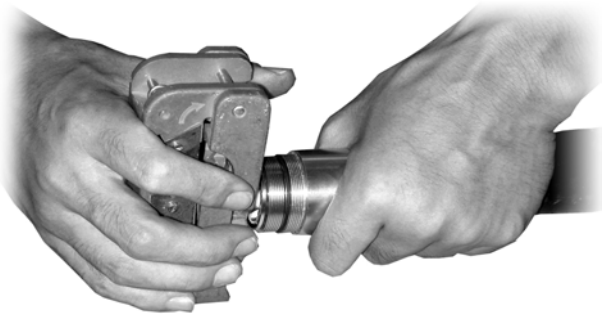

Fig. 10.4-9 Expand the External Conductor of the Feeder with a Tube Expander

8. Check whether there is residual copper scraps. The external copper sheath should be evenly expanded without burrs. Pull the back part of the feeder connector outward while keeping it from slipping away from the feeder. If it does separate from the feeder, make it again.

9. Connect the front part and the back part of the feeder connector, as shown in Fig. 10.4-10.

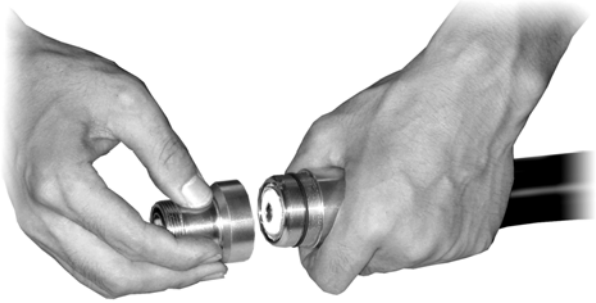

Fig. 10.4-10 Connecting the Front Part and the Back Part of the Feeder Connector

10. Screw the front part of the feeder connector, and fix it with an appropriate wrench, so that it does not move against the feeder. Then screw the back part of the feeder connector with the wrench till it is fixed, as shown in Fig. 10.4-11.

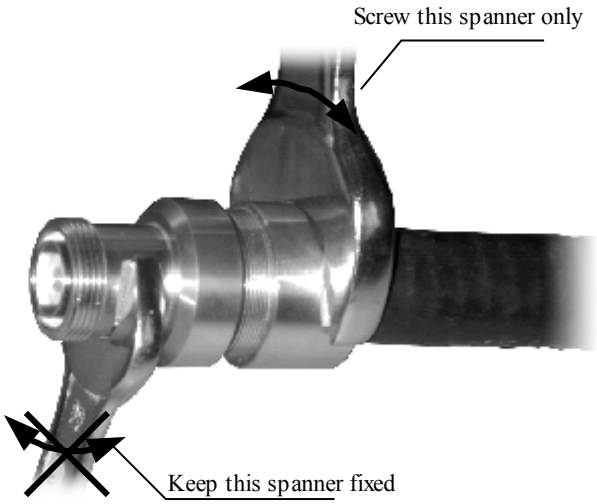

Fig. 10.4-11 Fixing the Front Part and the Back Part of the Feeder Connector

10.4.7.3 Cutting the Feeders

Caution:

When cutting the main feeder, label it at both ends. Temporary label can also be attached to the middle of the feeder. All the labels must be consistent. Otherwise, the feeder may not be correctly connected and the sectors may not correspond to the feeder. This is crucial!

Usually the feeder is rolled over to the installation site. The length of the main feeder should be exactly measured again on site according to the final route negotiated with the user. And the feeder should be cut into sections as required. The cutting steps are as follows:

1. For the antenna feeder to be installed on the roof

1) Determine the length of the main feeder in each sector again with a tape measure according to the actual route;

2) Cut the feeder to the length of the measured actual length plus 1m to 2m;

3) After cutting a main feeder, attach the corresponding temporary label to both ends of the feeder, for example, ANT1, ANT2, ANT3, ANT4, ANT5 and ANT6. When the feeder is installed, attach the formal label to it.

4) Move the cut feeders to the roof. During the process, take care that the feeders are not damaged or pressed.

2. For the antenna feeder to be installed on the tower

1) Use roller support, pulley block and hoisting rope to lift one end of the feeder to the tower top. The personnel under the tower cut the feeder to the length from the feeder enters the equipment room to the lightning arrester frame plus certain redundancy. Attach temporary labels to the lower part of the feeder. When the feeder enters the equipment room, attach the formal label to it.

2) It is better to make the upper connector of the main feeder before hoisting it to reduce the time that the staff works at heights and to better ensure the installation quality of the feeder connector.

10.4.7.4 Hoisting the Main Feeders of the Iron Tower

Caution:

During the hoisting, rough operations are not allowed, lest the sheath of the main feeder be damaged or scratched. The partial damage of a single main feeder will cause the whole cable be rejected as useless.

Take precautions for personal safety when hoisting the feeders.

If the main feeder is to be installed on the tower, pulley blocks should be used to hoist the main feeder, as shown in Fig. 10.4-12. Take the following steps to install the main feeder:

1. Check again that the main feeder labels attached 0.3m away from both ends of the main feeder are correct;
2. Wrap the main feeder connector made under the tower with flax (or antistatic packing bag together with foam) and strap it tightly.
3. Knot and fix the hoisting rope 0.4m and 3.4m away from the feeder connector to help the staff both on and under the tower pull up the feeder and to prevent the feeder and its connector from damage caused by their bumping into the tower during the hoisting process.
4. After the feeder is hoisted to the tower platform, fix the upper end of the cable to a proper place at several points, lest the cable fall down from the tower.

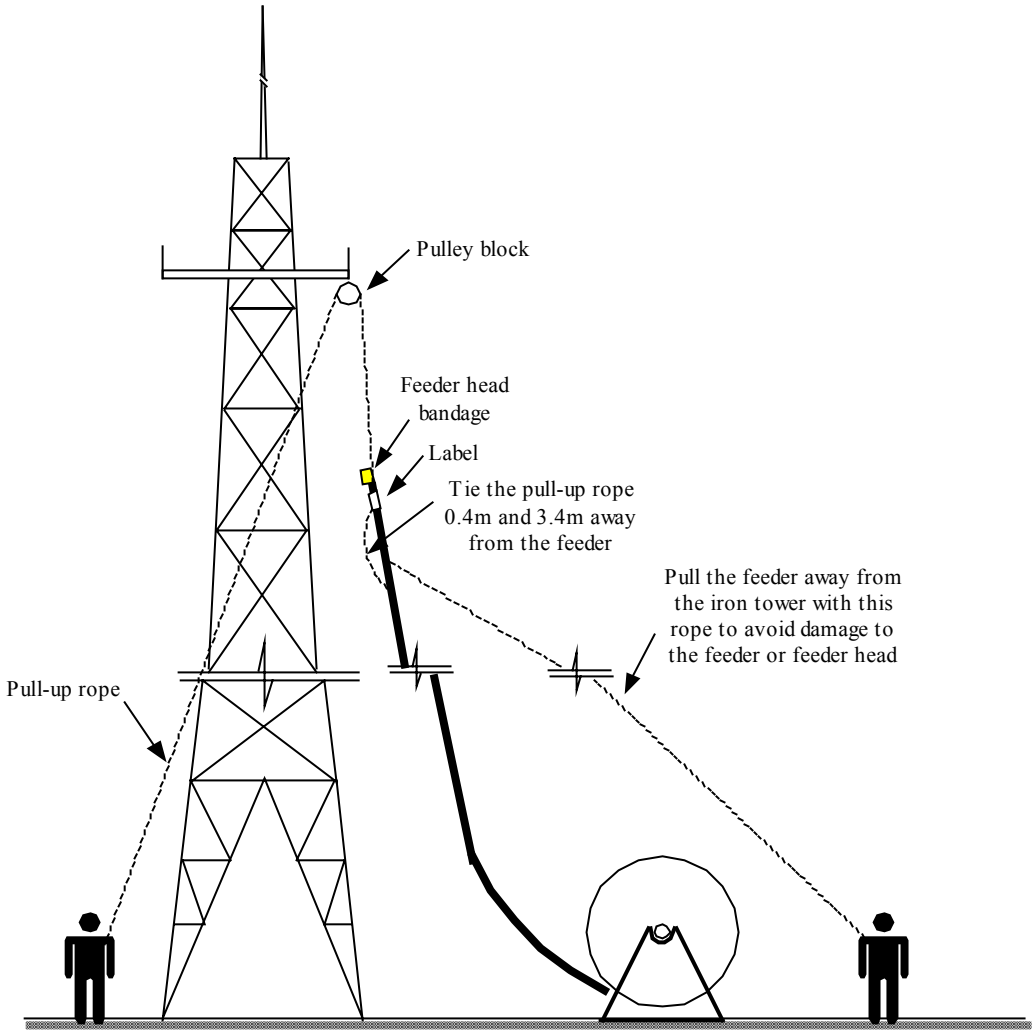

Fig. 10.4-12 Hoisting the Feeder to the Tower

10.4.7.5 Cabling and Fixing the Main Feeders

1. Cabling principle of the main feeder

- The main feeder that enters the equipment room from the feeder window and is routed along the indoor cabling rack should be bound neatly without crossing.
- The main feeder that is routed along the indoor cabling rack and the cabling rack on the tower should have no crossing;
- Make yourself familiar with the routing of the main feeder before cabling it. It is better to take down its actual route on paper to avoid rework due to crossing the cable;

- The minimum bending radius of the main feeder should not be less than 20 times the length of the radius of the main feeder. For one-time bending, the minimum bending radius is 90mm. The minimum bending radius of repeated bends is 200mm.
- The maximum spacing between the hangers is 1.65m.

2. Cabling procedure of the main feeder

1) Pre-install the three-feeder clips every 1.5 meters (or as per the actual condition of the iron tower, but no more than 1.65 meters) along the iron tower or cabling rack. Note that the spacing should be as even as possible and the direction of installing them should be the same. When installing two rows of feeder clips inside the same cabling ladder, the two rows should be parallel and arranged neatly. Fig. 10.4-13 shows the outside view of a three-feeder clip.

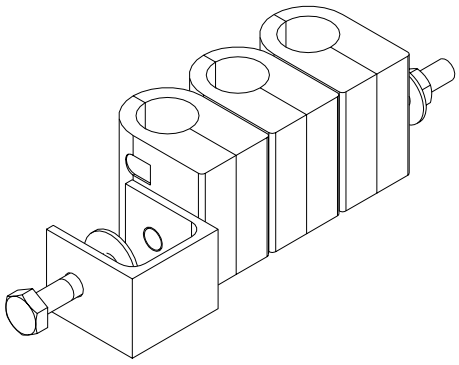

Fig. 10.4-13 Three-feeder Clip

2) Sort out the main feeders from the antenna to the equipment room inside.

3) Fix the main feeders from top to bottom and sort them out while attaching the three-feeder clips. Fasten the feeder clips after smoothing the main feeders. Note that you should keep the main feeders flat and straight rather than allowing any bulge between two feeder clips or fixing the feeders at the two ends simultaneously.

4) Fix the main feeders with three-feeder clips along the outdoor cabling ladders prepared by the network operator for the main feeders to be routed along the building top to the equipment room inside.

10.4.7.6 Introducing Main Feeders into the Equipment Room

1. Precautions

- Fig. 10.4-14 and Fig. 10.4-15 illustrate how the common feeders enter the equipment room. Please ensure that the feeders will not bring any rain into the equipment room when entering the equipment room. For that purpose, you can design water curves as necessary.

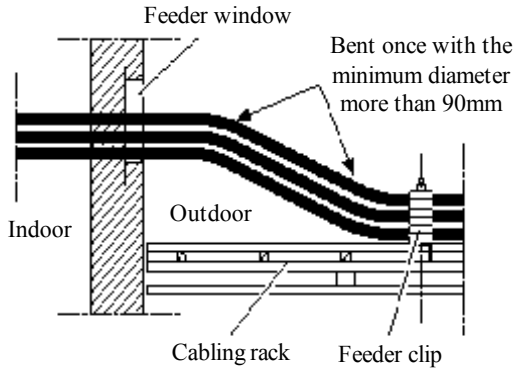

Fig. 10.4-14 Method 1 of Introducing Feeders into the Equipment Room

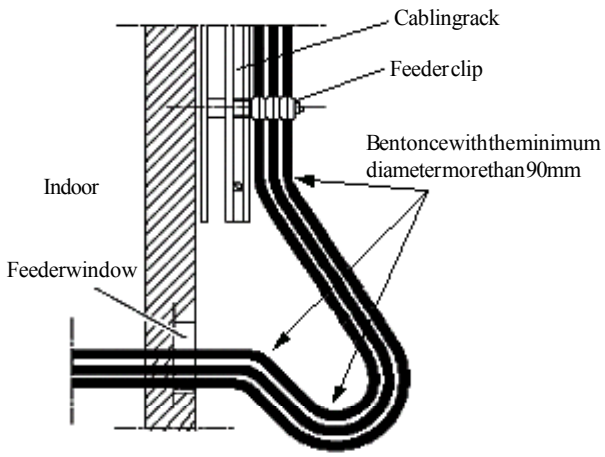

Fig. 10.4-15 Method 2 of Introducing Feeders into the Equipment Room

- Use cabling racks both indoors and outdoors to guide the feeders when introducing them through the feeder window into the equipment room.

2. Installation procedure

1) Loosen the fixing hoop from the feeder window to the proper position with reference to Section 10.4.6, "Installing the Feeder Window", and pull away the sealing cover of the aperture to thread the feeders.

2) Lead the feeders into the equipment room: Two persons are needed to cooperate with each other, one indoors and the other outdoors, to introduce the feeders from the outdoor cabling racks into the indoor cabling racks. During this process, care should be taken to avoid damaging the indoor equipment or damaging the feeder due to improper force applied on the outdoor feeder. Fasten the fixing hoop after pulling the feeders in place.

3) Cut the feeders. Pay attention to the following:

- Check the labels:

  Ensure that the temporary labels on the feeders are complete before feeder cutting and are still attached on the feeders after cutting. This is very important to avoid feeder chaos.

- Determine the cutting position:

  When cutting the feeders, select the cutting position according to the equipment room conditions (such as the rack installation position, the set top jumper length, the lightning arrester configuration or the installation position of the lightning arrester frame), the bending radii of the feeders and the cabling requirements of the equipment room.

4) Prepare the indoor connectors for the main feeders.

5) Connect the main feeders to the lightning arresters.

   If a lightning arrester is not grounded, it should be directly mounted onto the feeders to ensure proper insulation between the lightning arrester and the cabling rack.

   If a lightning arrester is equipped with a lightning arrester frame, each feeder should be thoroughly adjusted to ensure the screw threads properly fit in with the lightning arrester when the main feed and the arrester are connected. For details, refer to Section 6.2.3, "Installing the Indoor Lightning Arrester".

10.4.8 Installing the Indoor Jumpers

Indoor set top jumpers are used between the lightning arrester connected to the main feeder and the rack. Usually the finished 2m set top jumpers are used, or the jumpers can be prepared on site as per the actual length required.

If the 2m finished jumpers are used, they can be directly installed between the lightning arrester and the rack top.

If the jumpers are prepared on site, 1/2" feeders should be prepared through cutting according to the specific length of each jumper. Assemble proper feeder connectors onto both ends of the feeders according to the feeder connector assembly instructions, and connect the jumpers between the lightning arrester and rack top.

10.5 Checking and Testing the Antenna Feeders

After installing all the antenna feeders, conduct the SWR test on each of them. The measured SWR should be less than 1.5 and usually less than 1.3. If this is not satisfied, check immediately the feeder connectors installed, antenna, feeders and lightning arresters to find where the problem comes from. For the method of SWR test with SiteMaster, refer to Appendix G.

10.6 Waterproof Treatment for the Connectors

Caution:

The waterproof sealing for the outdoor jumpers and the feeder grounding clips of the antenna feeder system is an important part of the antenna feeder installation. It is of special concern. In the installation process, make sure to use waterproof tapes properly to ensure the quality of installing the antenna feeder system.

Use 1/2" jumpers, generally the 3m finished jumpers, between the antenna and main feeder for transition. Connect the 1/2" jumper and the feeder and seal their connectors as follows:

1. Connect and fasten the antenna jumper and the main feeder connector
2. Make waterproof treatment on the connectors in the following steps:

1) Cut waterproof adhesive tapes about 200mm long;

2) Wrap the waterproof adhesive tapes from a low position where the connector is connected and apply them about 200mm long to fill the low-lying parts of the connector, as shown in Fig. 10.6-1.

Fig. 10.6-1 Wrap the Waterproof Adhesive Tapes (1)

3) Extend the adhesive tapes to double their length when wrapping them. The direction of wrapping should be the same as the direction of screwing the feeder connector, lest the feeder connector be loosened during the wrapping process.

4) As shown in Fig. 10.6-2, wrap the adhesive tapes layer by layer and then wrap them again in the reverse direction. The upper layer covers the lower layer by about 1/3 to avoid water penetration. Finally, reverse the direction and wrap them layer by layer again. Apply the tape with three layers without any cut in the entire process. Wrap the tapes around the feeder connector till they protrude about 20mm from the feeder connector.

Fig. 10.6-2 Wrap the Waterproof Adhesive Tapes (2)

5) Grip the waterproof adhesive tapes after wrapping them to ensure firm bonding between the tapes and the feeders/feeder connectors, as shown in Fig. 10.6-3.

Fig. 10.6-3 Wrap the Waterproof Adhesive Tapes (3)

6) Apply two layers of the PVC tape on top of the waterproof adhesive tape. During the process, make sure the upper layer overlaps the lower layer by half the width of the tape.

7) Grip the PVC tapes and the waterproof adhesive tapes to make them tightly adhered to each other.

8) Tie the two ends of the adhesive tape with straps to prevent it from being aged or falling off.

11 Installing the GPS Antenna Feeder System

🕮 Summary

This part describes:

- Installation preparation for the GPS antenna feeder system;
- Structure of the GPS antenna feeder system;
- Installation flow of the GPS antenna feeder system;
- Installation procedure of the parts of the GPS antenna feeder system;
- Waterproof treatment of the connectors.

11.1 Installation Preparation for the Antenna Feeder System

GPS, as the clock and frequency reference of CDMA, is of great significance. According to the passive distance measurement principles, GPS antenna receives the navigation positioning signals from the GPS satellites and demodulates frequency and clock signals through the GPS signal receiver for use by the related units of the CDMA base station.

Requirements for the installation of the GPS antenna: The installation position of the GPS antenna should have a broad view so that the GPS antenna can track satellites as many as possible. Usually, select a safe place on the roof or at the lower part of the tower and try to make the GPS feeder short to reduce attenuation.

Requirements for the lightning protection of the GPS antenna: Usually, the GPS antenna is installed within the 45° lightning protection coverage of the tower. If it is not within the coverage, the user is required to prepare and install the lightning arrester for it.

Please note that the embracing pole that fixes the GPS antenna must be grounded.

11.2 Structure of the Antenna Feeder System

The structure of the GPS antenna feeder system is as shown in Fig. 11.2-1.

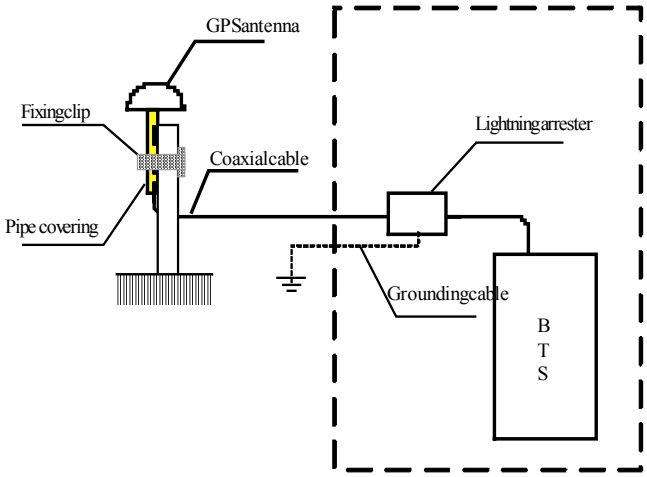

Fig. 11.2-1 Structure of the GPS Antenna Feeder System

11.3 Installation Flow

Follow the steps below to install the GPS antenna feeder system:

1. According to the preparation of the GPS coaxial cable connector, make the outdoor connector for the coaxial cable;
2. Thread the connector through the GPS accessory tube and distribute the coaxial cable from the GPS antenna to the GPS lightning arrester;
3. Screw the outdoor connector of the coaxial cable to the GPS antenna connector;
4. Keep the GPS antenna still while screwing the tube on the GPS antenna;
5. Fix the tube to the embracing pole with a fixing clamp;
6. Cut the coaxial cable according to the installation position of the GPS lightning arrester, make the indoor connector for the cable, and then connect it to the lightning arrester. Note that the equipment end and the feeder end of the GPS lightning arrester must be correctly connected.
7. Distribute the coaxial cable between the GPS lightning arrester and the GPS port on the BTS equipment.

11.4 Installing the Parts

11.4.1 Preparing the GPS Coaxial Cable Connectors

1. Stripping

   The size of the GPS coaxial cable to be stripped is as shown in Fig. 11.4-1.

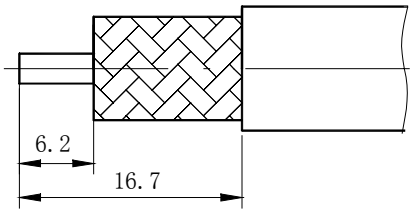

Fig. 11.4-1 Stripping the GPS Coaxial Cable

2. Welding the core wire

   Before welding the core wire, thread the parts with the cable in the sequence as shown in Fig. 11.4-2. Then weld the cable core wire and the pins. Note that the cable shielding layer should be open and slipped on the bushing.

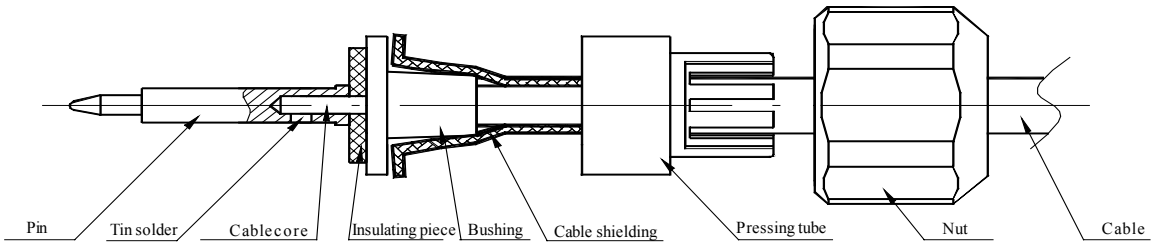

Fig. 11.4-2 Welding the Pins of the GPS Connector

3. Parts for Installation

   After welding the core wire, put the parts in the sheath. The structure of the cable assembly is as shown in Fig. 11.4-3.

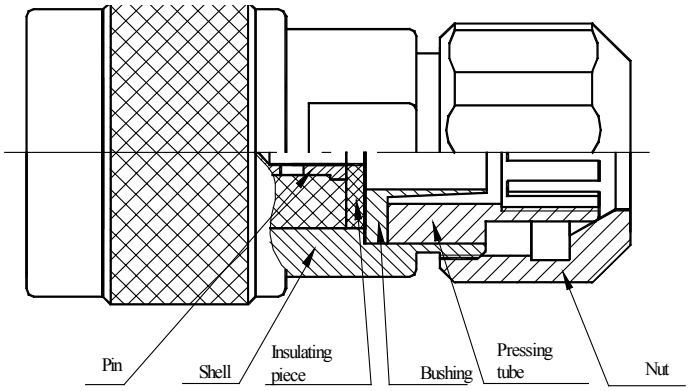

Fig. 11.4-3 Structure of the N-J7A Cable Assembly

11.4.2 Installing the GPS Lightning Arrester

Each GPS system has its own lightning arrester installed between the GPS antenna and the BTS rack. The lightning arrester should be connected to the outdoor grounding copper bar via a 6mm^2 grounding cable. For the BTS installed with a lightning arrester frame, you may fix the GPS lightning arrester onto the frame. In this case, the 6mm^2 grounding cable is unnecessary. Note: The lightning arrester must be connected correctly.

12 Installing the Boards

🕮 Summary

This part describes:

- Board types of BTS;
- Installation and replacement methods of the BTS boards;
- Front panel and interface of some BTS boards;
- Installation sequence of the BTS boards.

12.1 Board Types and Functions of BTS

Modules of the BTS are:

1. DSM

   DSM (Data Service Module) lies in the BDS of the BTS. It implements the trunking, data and signaling processing of Abis interface. It provides 16 E1 lines externally. Eight are used to connect upstream BSC while other eight to connect downstream BTS, which support the daisy chain networking mode and can also function as E1 extension to connect upstream BSC. This board may also connect to the transmission network to support SDH optical transmission connections.

2. CCM

   CCM (Communication Control Module) is the control core for data signaling routing, signaling processing, resources management and operation/maintenance of the whole BDS subsystem in BSS.

3. CHM

   CHM (Channel Processing Module) conducts modulation and demodulation of various CDMA channels and implements some power control functions.

4. RIM

RIM (Radio Frequency Interface Module) implements the interface between BDS and RFS. The forward link first sums the baseband data sent from CHM as per different sectors, multiplexes the summation result, HDLC signaling and PP2S from GCM, and then sends them to RMM. Then the reverse link receives the reverse baseband data and HDLC signaling, selects them according to the signaling sent from CCM, then sends the selected data by broadcasting to the CHM and the HDLC data to the CCM for processing. RIM lies in the BDS frame and supports active/standby configuration.

5. SAM

SAM（Site Alarm Module） monitors the running status of the PM and fans, as well as access control, flood, temperature, humidity, and smog signals. It will then report the results to the OMC console via CCM. In addition, it provides RS232 and RS485 interfaces for the connections with external monitoring devices.

6. GCM

GCM (GPS Control Module) provides reliable and high-stability clock source for various modules of BTS. The major clocks include TOD (UTC timing message), system clock (16CHIP and PP2S), circuit clock (2MB and 8K) and RF reference clock (30M).

7. SNM

SNM lies in the BDS and implements STM-1 downlink and uplink functions for BTS.

8. CDM

CDM (Clock Distribution Module) distributes the clock of GCM in BTSB to TRX. The RF reference clock in BTSB is transmitted as the 30M MLVDS clock, while TRX needs the 10M/12M analog clock. Therefore, CDM is used to convert the 30M MLVDS clock sent from GCM to TTL signals and generate the 10M/12M analog clock needed by TRX in HIRS through the phase-lock loop.

9. RFE

RFE module is the main module connecting the internal system of RFS in the BTS and the external antenna of the BTS. Its terminal port is the RF port at the top of the BTS and the test port of the BTS for system testing. It has great influence on the receiving sensitivity and exit transmitting power of the whole BTS system.

10. HPA

HPA (High Power Amplifier) amplifies the power of TRX's forward transmission signals so that the signals go through the duplex filter of RFE at a proper power value and then transmitted by antenna into the cell. The CDMA system requires that HPA should have certain linearity.

11. TRX

TRX is the junction connecting RF and baseband signals. One TRX corresponds to one sector of one carrier. In the reverse channel, TRX receives the main and diversity receiving signals of the sector, conducts down conversion, median frequency filtering, AGC processing and I/Q demodulation on these signals to convert the received modulated RF signals into baseband I/Q signals. In the forward channel, TRX conducts I/Q modulation, median frequency filtering and upward conversion on the baseband I/Q signals to convert them into modulated RF signals, while also performing TPTL power control.

12. PSMD

PSMB is the main power board of the whole BTS.

13. PSMC

PSMC (±12V power) conducts DC/DC conversion from −48V to ±12V. The max. output of +12V is 25A and that of −12V is 8A, both providing the RFS with working power supply in the 1+1 backup mode. This module is also available with the remote control and teleaction functions.

14. PPM

PPM (27V power board) conducts DC/DC conversion from −48V to +27V. It has protection functions for input over/under voltage, output over/under voltage, output over-current, and over-temperature. It employs the temperature-controlled forced cooling structure and is also available with the remote control and teleaction functions. Output current of one PPM is 25A.

When the load exceeds 25A, the board starts limiting current. The HPA is provided with the working power supply by several 27V PPMs connected in parallel to work in the N+1 backup mode.

12.2 Introduction to Main BTS Modules

12.2.1 RFE Module

ZTE currently provides two types of RFE (RF Front End) modules. Select the module according to the BTS configuration as follows:

- RFE-DUP: Applicable to single-carrier BTS and two-carrier BTS;
- RFE-DIV: Diversity RX branch, applicable only to single-carrier BTS.

The panel of the two types of RFE module is as shown in Fig. 12.2-1. All RF interfaces are located on the front panel, including the interfaces for N connection with the antenna and the connection to TRX and SMA of HPA.

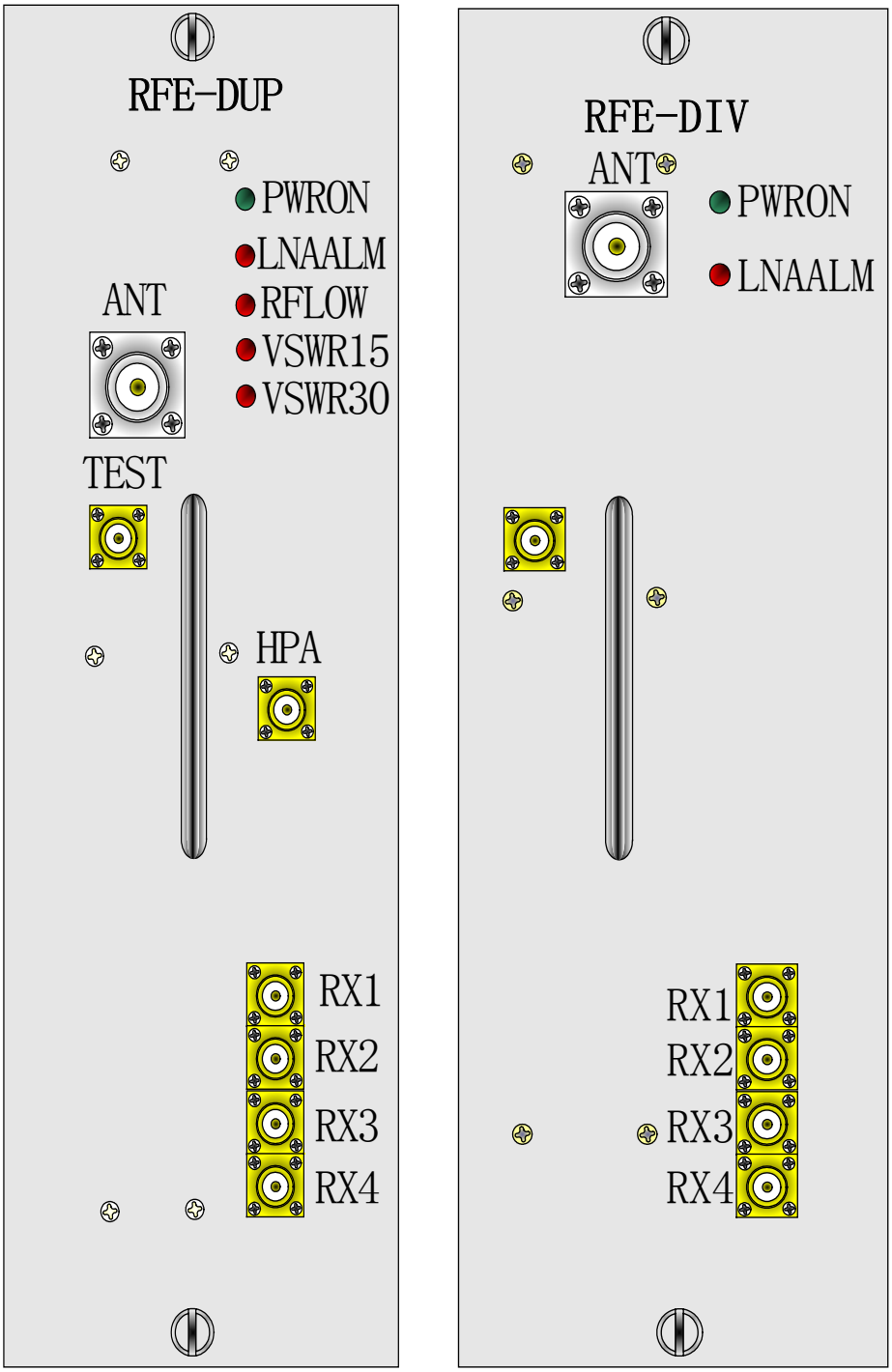

Fig. 12.2-1 Panel of RFE Modules

Description of the interfaces on the RFE panel is given in Table 12.2-1.

Table 12.2-1 Description of the Interfaces on the RFE Panel

Name of the Interface End	Signal	To	Connector	Connection Mode
ANT	TX power signal to the antenna and RX signal of the antenna	Cabinet-top antenna interface	N connector	1/2" RF cable
HPA	Power signal output by HPA	RF OUT end of HPA	SMA	RF cable
RX1	One of the four power branches of the received signal amplified by LNA	RX end of TRX of the first carrier	SMA	RF cable
RX2	One of the four power branches of the received signal amplified by LNA	RX end of TRX of the second carrier	SMA	RF cable
RX3	One of the four power branches of the received signal amplified by LNA	Test interface	SMA	A 50Ω terminal load is connected when the interface is not in use.
RX4	One of the four power branches of the received signal amplified by LNA	Reserved	SMA	A 50Ω terminal load is connected when the interface is not in use.

12.2.2 HPA

The front panel of HPA is as shown in Fig. 12.2-2.

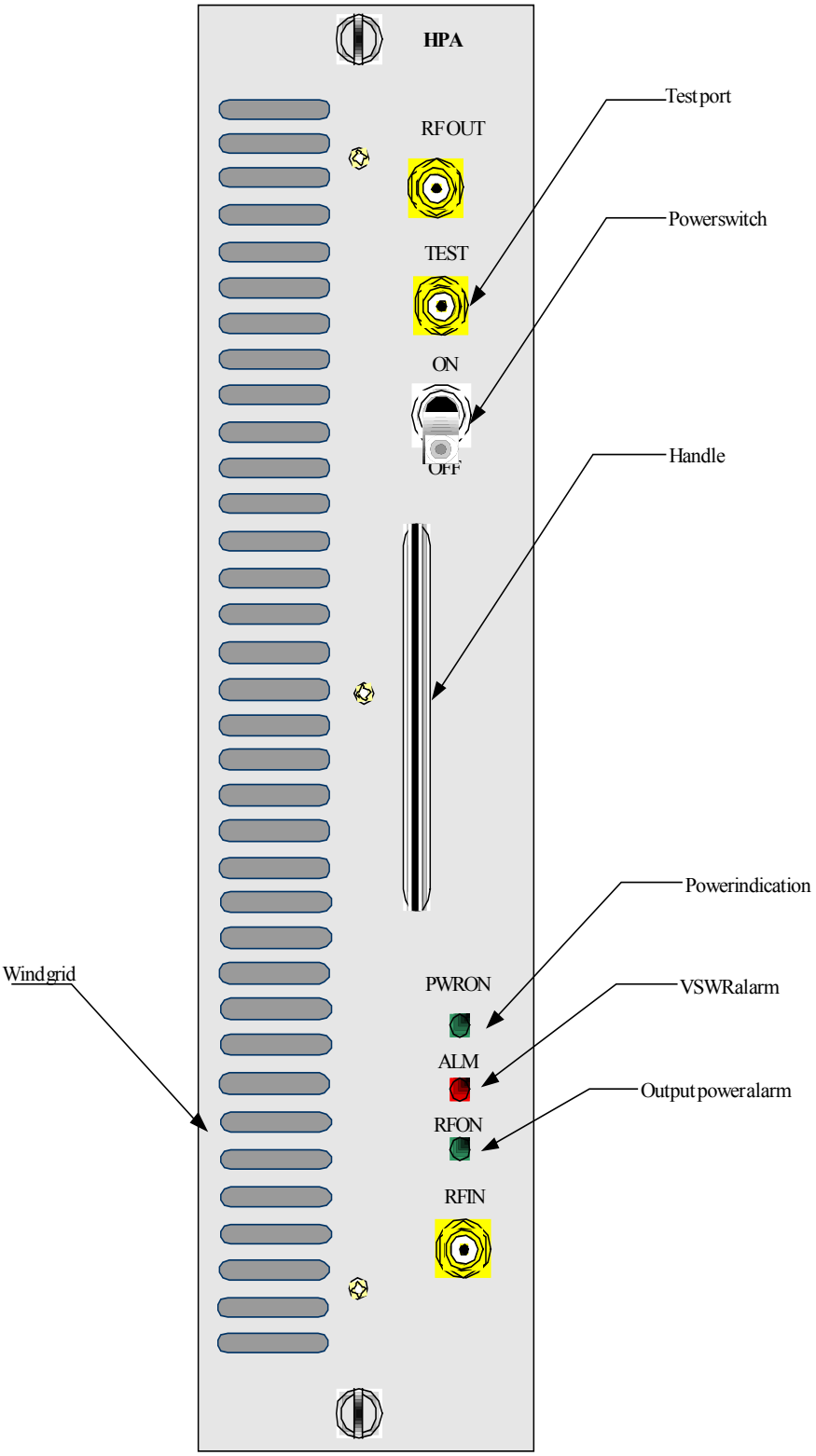

Fig. 12.2-2 Structure of the HPA Front Panel

Description of the HPA front panel is given in Table 12.2-2.

Table 12.2-2 Description of the Interfaces on the HPA Front Panel

Name of the Interface End	Signal	To	Connector	Connection Mode
RF IN	Forward TX signal sent by TRX	TX end of TRX	SMA	RF cable
RF OUT	Amplified forward power signal	HPA end of RFE	SMA	RF cable

12.2.3 TRX

The structure of the TRX front panel is as shown in Fig. 12.2-3.

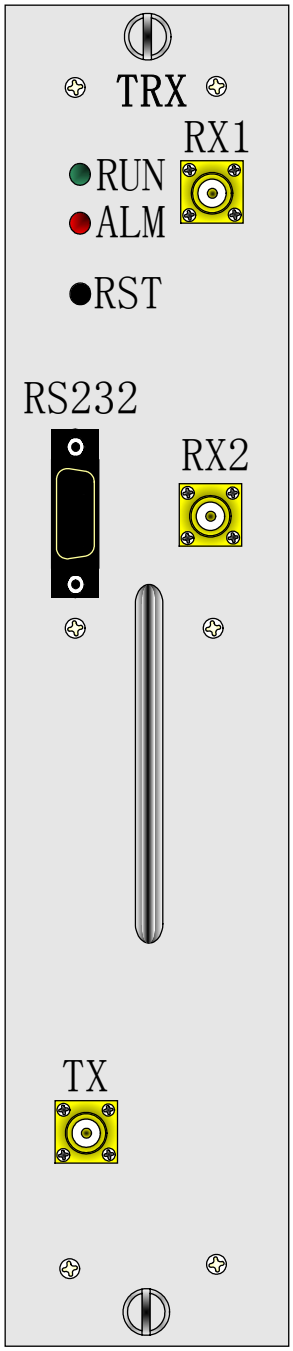

Fig. 12.2-3 Structure of the TRX Front Panel

Description of the RF interfaces is given in Table 12.2-3.

Table 12.2-3 Description of the TRX RF Interfaces

Name of the Interface End	Signal	To	Connector	Connection Mode
TX	Forward TX signal sent by TRX	RF IN end of HPA	SMA	RF cable
RX1	Reverse RX signal of RFE	RX output end of a corresponding RFE in the same sector	SMA	RF cable
RX2	Reverse RX signal of RFE	RX output end of another corresponding RFE in the same sector	SMA	RF cable

12.3 Installing and Replacing Boards

After installing and fastening the BTS rack, the boards and modules can be inserted into their plug-boxes. Boards and modules in the plug-boxes of the BTS rack can be inserted both from the front and the rear. Insert them in the correct place during the installation. Check the socket slot during installation.

1. Structure of the boards and the modules

- Each board and module is installed with connector on its back to connect with the backplane, as shown in Fig. 12.3-1;
- The board is installed with a panel bar on its front, which has handle on it to plug/unplug the board.
- There are board name and indicators on the panel bar. The board name indicates the circuit board type, and the indicators indicate the working status of the board, as shown in Fig. 12.3-2;
- The circuit boards are vertically inserted into the plug-in shelf in the rack and connected with one another by the system bus on the backplane.

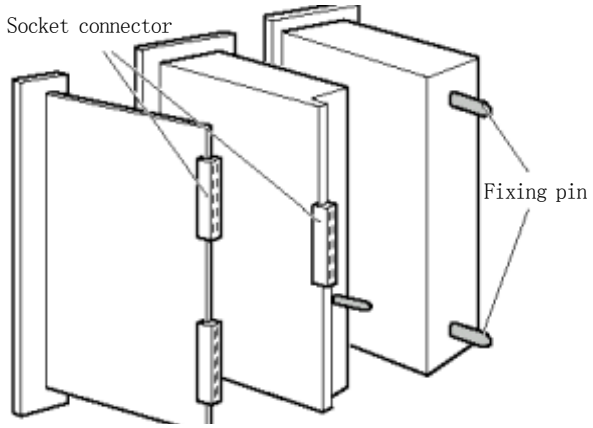

Fig. 12.3-1 Connectors on the Rear of the Boards and Modules

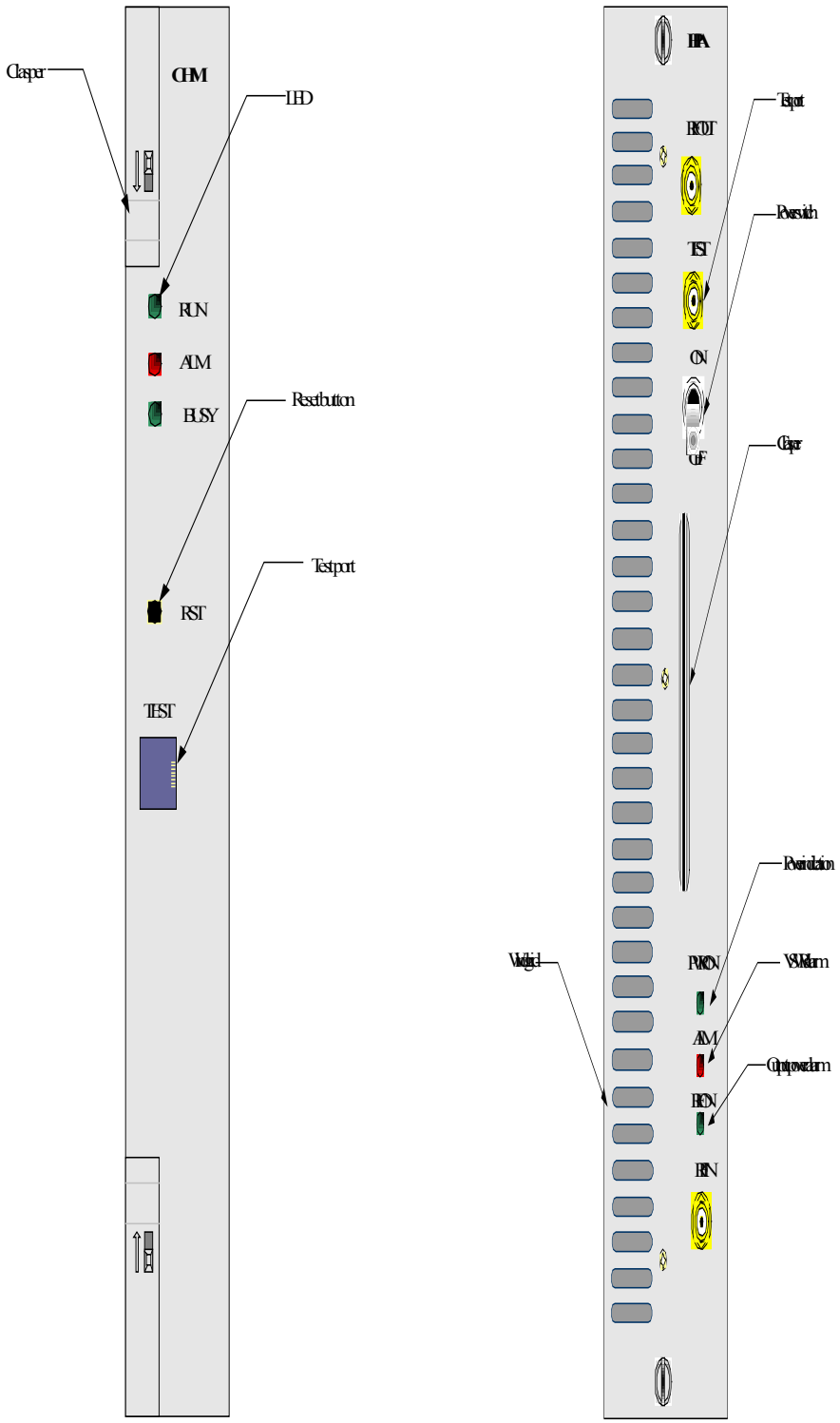

Fig. 12.3-2 Front Panel of the Boards and Modules

2. Plugging boards and modules

1) Be sure to wear the antistatic wrist ring when plugging a board or a module.

2) Take the boards and modules out of the antistatic bags, and check if there is any parts missing or damaged;

3) Be sure to insert the board to the right place indicated by the board name on the panel bar;

4) Insert the circuit board vertically along the guide slot till the circuit board cannot be inserted further, which indicates that the circuit board has been exactly in place. Never insert the circuit board with extra force, lest the pins on the backplane be bent or broken.

3. Locking the board

When the board is inserted in place, press down the handle till it clicks, which indicates that the board is clipped by the spring.

4. Locking the module

When the module is inserted in place, fasten it with the spring nail on the panel.

5. The boards PPM, PSMC, PSMD and HPA in the BTS rack are available with their own power switches. They should not be plugged until being powered off.

Other boards in the BTS rack (CHM, CCM, CMD, SNM, SAM, DSM, TRX, RFE and RIM) can be hot plugged.

12.4 Introduction to BDS Plug-in Shelves

The slot diagram of the BDS plug-in shelf is shown in Fig. 12.4-1.

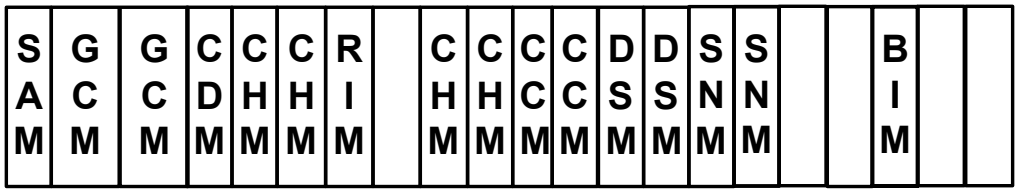

Fig. 12.4-1 Slot Diagram of the BDS Plug-in Shelf

13 Hardware Installation Check

🕮 Summary

This part describe the check of the BTS hardware installation.

After hardware installation is completed in BTS, the installations should be checked before they are powered on.

13.1 Cabinet Check

An indoor cabinet involves the installation of a BTS rack and other cabinets (such as DC/AC power cabinets). A cabinet, when installed, should be checked as follows:

1. The rack installation location conforms to the design drawing.
2. A rack, when fixed, should be firmly erected in compliance with the earthquake proof requirements for an earthquake of magnitude 7 on the Ritcher Scale.
3. The levelness error of a cabinet should be less than 3mm, but its vertical missing should be no more than 3mm. The gap between two adjacent stands should be no more than 3mm.
4. The front door of the rack should be flush with the front edges of other equipment, without any concave or convex.
5. The front of the rack should be at 1m away from the wall, and the rear of the rack 0.8m away from wall.
6. The parts on the rack should not go off or damaged. The rack should be painted well and the labels on it should be correct, clear and complete.
7. Check all over the cabinet to make sure that no metal scrap or conducting wire is left. The cabinet inside is clean and has no sundries.
8. All screws should be tightened with flat washers or spring washers placed correctly.

9. Each stand should be equipped with 4 partition insulators. If installed close to walls, some of them should be placed between each stand and walls to make a cabinet and walls insulated.
10. The stand supporter should be consistent with the hole sites of expansion screws.
11. The upper plane of the conductive floor in the equipment room is no higher than the lower surface of the stand lest the thermolysis of a stand should be affected.
12. After all cables are laid out, the small cover plates of the wire outlets at the set top should be pushed forward to cover the wire outlets and prevent rodents entering the cabinet.
13. In case of a combined cabinet, check whether the cabinets are well arranged and connecting pieces at the combined set top should be firmly installed.
14. The surface of the integrated equipment should be clean and tidy and the paint outside it should be in good condition. The identifications should be correct, clear and complete.
15. The front door of a cabinet must be easily opened or closed.

13.2 Check of cabling rack

In terms of a cabling rack, the hardware installation check is required as follows:

1. The location and height of the cabling rack should meet engineering design requirements.
2. The flat steel of the cabling rack should be flat and straight, without any apparent warping or skewness.
3. Each cabling rack should be equipped with a ground wire. All points of connection should be superior in electrical performance and they are well connected with the grounding body in the equipment room.

13.3 Laying, Binding and Identification of Cables

As follows are the principles of laying and binding cables:

1. The cables are laid flat and straight, without any apparent fluctuation, skewness, crossing or jump wire in air. Any remaining length should be curled, bound and laid in a cable trough.
2. Cables should be bent smoothly and evenly and the outer part of the arc should be as vertical or horizontal as a direct line.
3. Power cables and signal lines are routed, with over 150mm in between each other.
4. Both terminals of the cables should be clearly labeled or marked to prevent connection mistakes.
5. Connector locations should be compact, firm, well-contacted and upright without broken or bending.
6. After being laid, cables should be trimmed to make them look straight, tidy and pleasing to the eye, without any crossing.
7. Cable straps should be made tidy and pleasing to the eye. Cable clips should be evenly spaced, neither too tight nor loose, and go in the same direction.
8. Any excess cable strap should be cut and all indoor cable straps must be cut from the root, without any tips left.
9. Some residue should be left when all outdoor cable straps are cut after binding.
10. All cable straps must be cut from the root and no tip is left.
11. Each label identifies the uses of a cable and the labels with the same content on it should be attached on both terminals of the cable.
12. Wrap labels with some cellulose tape to prevent any loosening.
13. All cables, especially main feeders and indoor 1/2" jumpers, should be labeled. All labels should be arranged in a tidy and beautiful way and go in the same direction.

13.4 Installation Check in terms of power cables and ground wires

The installation check in terms of power cables and ground wires is required as follows:

1. The power cables and ground wires in the equipment room should be laid in accordance with engineering design requirements.
2. The PGND protective grounding wire on a BTS rack employs 35mm^2 yellowish green or yellow copper-core cables and are connected with indoor PGND grounding copper bars. They should be well contacted and kept firm. GND/BGND ground wire employs 25mm^2 black copper-core cables and -48V power cable employs 25mm^2 blue copper-core cables. Both ground wires and power cables should be laid straight and well connected.
3. An earth bus should be directly connected with an indoor ground wire bus instead of being connected with any other equipment. The line width of the earth bus must be more than 50mm^2.
4. Each grounding point in the grounding copper bar is connected with one piece of equipment alone.
5. The protective grounding wire and AC neutral line are routed instead of being placed or used together.
6. AC neutral line in the power room is independently grounded.
7. The indoor ground resistance is less than 5Ω.
8. Each cable is identified clearly and correctly.
9. The ground wire of a power cable, when laid, should be bound separately from other cables.
10. The remaining length of the ground wire and power cable should be cut off instead of coiling it up and reserving it.
11. The copper lugs on both terminals of power cables and ground wires should be soldered or pressed firm.
12. The power cable and ground wire should be of whole material and no connector is allowed in the middle.
13. The grounding bar should be insulated from walls and the ground wire extends as short a distance as possible.
14. The primary power supply is correctly connected with the power supply terminals on the rack.

15. The lifting lug of a power cable should be soldered or pressed firm and upright.
16. The power cable and copper lug must be contacted in a reliable and firm way and are sealed with an adhesive tape. The copper lug must be connected firmly with the power cabinet (or the BTS rack).
17. Insulated protective sleeves are well installed on both connecting terminals of the power supply on the rack top.
18. Power cables, ground wires, trunk lines and RF cables should not be broken or damaged.
19. The cable labels on both terminals of power cables and ground wires should be clear and correct.
20. The bare wires at the connecting terminals and lug handle should be tightly wrapped with insulating tape or put in a heat-shrink tube instead of being exposed to outside.
21 The connecting terminals should be equipped with flat washers and spring washers.

13.5 Check of T1 Cable Installation

The installation check of T1 cables involves the following:

1. T1 cable connectors are reliably installed, without any short-circuit or damage.
2. T1 cables are connected correctly and labeled clearly.
3. No T1 connector gets loose. Test with a multimeter whether the connector shell and ground wire system are well connected. Otherwise, it shows that the ring flange of the connector and shell are in poor contact.
4. The T1 cables on the set top should reserve some margin length. Do not stress them in case they cannot be reliably connected with the rack connectors when the cabling rack vibrates.
5. T1 cable connectors must be connected reliably.

13.6 Sensor Installation Check

Requirements:

1. The temperature/humidity sensor is vertically installed and cables are correctly connected with the set top.
2. The smog sensor is horizontally installed and cables are correctly connected with the set top.

13.7 Installation Check of Connections inside a Cabinet

The connections inside a cabinet are checked as follows:

1. The RF cables between modules within the rack should be connected in a correct and reliable way.
2. The screws of all modules within the rack must be rotated to the greatest extent lest modules and backplanes should not be connected reliably.
3. Any unused connector is screwed on with a matching terminal.
4. The RF cables between TRX, HPA and DUP should be parallel as much as possible and cannot be extended too tightly. Some residue should be left at the bending part and connectors connected reliably.

13.8 Installation Check of Indoor 1/2" Jumpers

Indoor 1/2" jumpers involve the following installation check:

1. According to the name plate of the main feeder, use 1/2" jumpers to connect with the connecting terminals on the rack top.
2. The labels of 1/2" indoor jumpers should be marked with corresponding sectors and the length of the main feeder.
3. Indoor jumpers should be neither too long nor too short and have beautiful cabling. They should be bound on the cabling rack in order.
4. The cabling should provide convenience for maintenance and future capacity expansion.
5. Jumpers should be laid by the layer and sector.
6. There should be 30cm flat and straight where jumpers and a lightning arrester are connected.

13.9 Installation and Check of Lightning Arrester

The lightning arrester is installed as follows:

1. An RF lightning arrester is connected with the connectors of the feeder on both terminals and threads should be aligned and tightened.
2. The 6mm^2 yellow ground wire of a GPS lightning arrester must be connected with an outdoor ground wire bus and is well contacted with outdoor grounding copper bars.
3. The RF lightning arrester and the GPS lightning arrester should be hung between two crosspieces of the cabling rack. The lightning arresters should be insulated from the cabling rack without contact.

13.10 Installation and Check of Lightning Arrester Rack

The lightning arrester is installed as follows:

1. A lightning arrester rack installed should be insulated from the cabling rack.
2. The lightning arrester should be installed on the lightning arrester rack in a firm, reliable and beautiful way.
3. The grounding copper wire of a lightning arrester rack must be routed to outdoor grounding copper bars for reliable grounding.
4. When led outdoors, the grounding copper wire of a lightning arrester rack must be insulated from indoor conductors.

13.11 Installation and Check of Main Feeder and GPS Feeder

The main feeder and GPS feeder are installed as follows:

1. To make a main feeder connector, you have to use a special cutter. The profile of the main feeder should be flat and smooth. The main feeder has no copper scraps in its copper tube. The feeder connector should be made normally.
2. 7/8" feeder connector should be tightened with a big spanner and installed in place to avoid any abnormal standing wave ratio due to false connections and ensure normal system running.

3. The feeder between the tower top and the equipment room should be grounded in at least three points. The first location is within 1m from the tower up to the platform. The second is within 1m from the tower to the front of the outdoor cabling rack. The third is within 1m between the feeder and the feeder window. The grounding points should be bound firmly with proper waterproof measures. Where a grounding kit is installed, the outer sheath of a feeder is removed according to the kit size. When installing the grounding kit, pay attention to waterproof measures. The terminal of the grounding kit connected with a ground wire should face downward lest any rainwater should flow into the feeder along the ground wire.
4. If a tower is above 60m and needs a longer feeder, another feeder grounding clip should be placed in the middle of the tower.
5. If a feeder is off the tower and routed for above 20m at the building top or on the cabling rack before going into the room, another grounding clip for lightning protection should be put at the building top or on the cabling rack.
6. The terminals of the grounding clip of a feeder should be fixed on the steel plate of a nearby tower.
7. The outdoor grounding copper bar employs a special reliable path to an underground ground grid. The line width should be more than $50mm^2$. Otherwise, users should lay connecting cables as soon as possible.
8. For a building without a tower, the antenna feeder ground at the top should be connected with the nearby lightning protection ground grid on the roof.
9. If the feeder employs a downward cable ladder to go along walls downward from the building top and enters a room, the cable ladder should be grounded.
10. The ground wire of a feeder should be led from up to down. The separation angle between the feeder and ground wire should be no more than 15°.
11. The cabling of the feeders should be visually appealing without crisscrossing. They should be well arranged and have no apparent twists and turns. The feeders entering a room should be tidy, flat, and straight and in the bending of the cables should be identical. The main feeders are correctly connected and the sectors concerned are correct too.

12. The minimum bending radius of a feeder should be no less than 20 times the feeder radius, and the bending radius of the main feeder should be more than 0.3m.
13. The cabling of the main feeders should be planned. When the cabinet front is parallel to the direction in which a feeder enters a room or the cabinet back is facing the direction in which a feeder enters a room, the main feeders within a sector should be arranged as a row. The arrangement order of each row should be consistent. When the cabinet front faces the direction in which a feeder enters a room, one sector is arranged as a column and the arrangement order of each column should be consistent.
14. The feeder connector should have no bare copper sheet. Two name labels should be bound on both terminals of a feeder to ensure that feeders correspond to antennas. Write corresponding lengths on a feeder name plate.
15. Avoid any dry joint in soldering GPS core wire.
16. GPS copper core and external outer layer cannot be short-circuited. The core pin of a feeder connector should be parallel to the external end face of a GPS feeder connector.
17. GPS feeder connectors should be tightened.

13.12 Installation and Check of Feeder Windows and Waterproof Bend of the Main Feeder

Feeder windows and waterproof bend of the main feeder are installed as follows:

1. A feeder window is fixed on one indoor wall and the feeder hole bulging on the feeder window faces outdoors.
2. The glue injection hole on the packing gland on the feeder sealing window should be sealed upward and luffer boards should be installed on one indoor walls.
3. When a feeder window is installed at the building top to lead a feeder into the room, it should be well sealed.
4. When an outdoor feeder enters the equipment room, a waterproof bend must be made at the outdoor feeder window. The lowest point of the waterproof bend is required to be 10cm ~20cm lower than the lower edge of the feeder window.

5. The minimum bending radius of a feeder should be no more than 20 times the feeder radius, and the bending radius of the main feeder should be more than 0.3m.
6. The indoor and outdoor parts of a feeder should be both above 0.5m. There should be 0.3m flat and straight at the lightning protection rack.

13.13 Installation and Check of Three-way Feeder Card

A three-way feeder card is installed as follows:

1. A three-way feeder card should be fixed on an outdoor cabling rack.
2. The intervals between the feeder fixing clips should be even and go in the same direction.
3. A feeder card every 1.5m should be installed on the main feeder.

13.14 Installation and Check of Outdoor 1/2" Jumpers

Outdoor 1/2" jumpers are installed as follows:

1. Antennas and 1/2" jumpers. The 1/2" jumpers and main feeders should also be correctly connected. The threads of the connectors should fit in and the connectors are tightened.
2. The jumper connected with an antenna should be bound along the support crossbar to the steel frame of the tower.
3. The wrapping requirements between an antenna and 1/2" jumper connector and the wrapping between a 1/2" jumper and the main feeder connector are as follows: 1) the connector is wrapped with some waterproof self-adhesive tape; 2) the waterproof self-adhesive tape at an antenna terminal must be wrapped until the antenna root; 3) the feeder terminal should be wrapped until 10cm away from the connector; 4) the waterproof self-adhesive tape is wrapped with an insulating tape longer than the waterproof self-adhesive tape.
4. At the joint between the jumper and the antennas, they should be parallel to each other with 30cm in between.
5. The connector is wrapped with a waterproof self-adhesive tape, which must be extended to an antenna root. Wrap the feeder terminal until 10cm away from the

connector. Wrap the waterproof self-adhesive tape with an insulating tape longer than the waterproof self-adhesive tape.

6. All outdoor jumper connectors should receive waterproof sealing treatment and a jumper should be equipped with a waterproof bend.

13.15 Installation and Check of an Antenna

Requirements:

1. An antenna support and a tower should be connected in a reliable and firm way.
2. Check the model of the antenna in use to make sure that it conforms to networking planning.
3. The hanging height of an antenna refers to the distance between the ground and the middle of the antenna. It is required that the actual hanging height of an antenna conforms to network planning, and the antenna should be installed as designed.
4. The RF antenna and the GPS antenna should be included in the protection area of a lightning arrester (the area within the downdip of 45º from the lightning arrester).
5. Measure the azimuth of an antenna. In case of a unipolarization directional antenna, each antenna should be measured. The actual azimuth of an antenna conforms to network planning and two antennas within the same sector goes in the same direction. The azimuth error of the directional antenna is no more than ±5º.
6. Measure the actual mechanical downdip of an antenna with an angulometer. In case of a unipolarization antenna, each antenna should be measured. An omni antenna will not be checked and a directional antenna should have the azimuth error of no more than ±0.5º. The actual mechanical downdip of an antenna conforms to network planning and two unipolarization antennas have consistent downdip.
7. The electrically controlled pointer antenna is adjusted with a spanner, and the electrically controlled digital antenna is controlled with key input in the equipment room. Note that the control line connected with the antenna is vulnerable. In the case it is broken, it has to be directly adjusted with a spanner

at the antenna terminal. Each of the unipolarization antennas should be measured. The actual electrically controlled downdip of an antenna conforms to network planning and two unipolarization antennas should have consistent downdips. This is not required if it is not an electrically controlled antenna.

8. All antenna poles should be firmly installed and well grounded. All antenna poles are required to be vertical to the ground and the vertical error should be less than 2º.In particular, all antennas must be vertical to the ground. Check with a line hammer to keep the vertical error less than 2º.
9. The receive/transmit horizontal interval of an omni antenna should be no less than 3.5m.
10. An omni antenna should be at least 1.5m away from the tower while a directional antenna should be at least 1m away from the tower.
11. The jacket top of an omni antenna should be level to a support or slightly higher than the support top.
12. When an omni antenna is installed on a roof, the horizontal interval between the omni antenna and antenna lightning arrester should be no less than 2.5m.
13. An omni antenna installed on a roof should avoid blind area.
14. Check the matching relationship of the main diversity antennas within the sectors and the set top jumpers on the rack.
15. The diversity distance between two antennas within one sector refers to the vertical distance between the parallel lines of the two antennas front surfaces. It is not the distance between two antennas. Diversity distance is irrelevant to bipolarization antenna. The diversity distance should be 3.5m for 800M system, 1.5m for 1.9G system, and 6.7m for 450M system.
16. The vertical interval between directional antennas within different sectors installed on the same antenna support should be more than 0.6m.
17. When isolated from an antenna in G network, the vertical separation should be more than 1m, and the horizontal separation should be more than 2m.
18. GPS antenna should be vertical, secure, in a position as low as possible, and without barrier. The GPS spatial angle should be more than 90ºC.

19. When there is no tower, the GPS antenna should be installed on the building top and equipped with a standalone lightning arrester.

13.16 Check of the Standing Wave Ratio of a Feeder

The standing wave ratio of a feeder is checked as follows:

1. Measure the standing wave ratio after antennas and all feeders are installed.
2. The terminal of the indoor 1/2" jumper to the rack is connected with a standing wave ratio tester for testing. The standing wave ratio should be less than 1.5, preferably 1.3.
3. Fill in a corresponding vswr value and provide vswr test-chart.

13.17 Check of Indoor/Outdoor Environment

The indoor/outdoor environment is checked as follows:

1. Any outdoor engineering waste should be cleaned. After the installation is over, the outdoor work site should be recovered to what it was, without any cable strap, stub, waste paper box, waste cable or waste plastic bag. The whole site should be clean and tidy.
2. Put away indoor unused materials. The materials to be put in the equipment room should be kept in order. Keep everything indoor clean and tidy. No littering is allowed.
3. Under the raised floors at the rack bottom and around the rack, there should be no cable strap, stub, desiccant and other engineering materials left.
4. The front door, rear door and side plate of the rack should be cleaned without visible stains caused by hand touching. There should be no dirt inside and outside the rack (dead angle) and inside the cabinet, there should be no cable clip or sundries left.
5. There should be no fingerprint or other stains on the cabinet surface.

14 Power-on/Power-off

🕮 Summary

This part describes:

- The check before BTS is powered on;
- The power-on procedures of BTS;
- The power-off procedures of BTS.

14.1 Check before Power-on

14.1.1 Check of External Connections of the rack

1. Check the power supply cables: check carefully to see whether the power cables of DC connecting terminals on the set top are correctly connected. Make sure that the poles are properly connected and screws are tightened.
2. Measure with a multimeter to see whether the voltage input on the DC power distribution rack is within the allowable range (-40V~-57V). If not, check the power system in the base station.
3. Make sure that T1 cables are correctly connected without insecure connections.
4. Check the antenna feeder system. Check with a standing wave ratio tester to see whether the standing wave ratio of the antenna feeder is less than 1.5 (generally less than 1.3). Feeder connectors should be well assembled and no feeder or antenna is faulty.
5. Check whether cable labels are attached firmly, correctly and beautifully.

14.1.2 Check of Rack Inside

1. Open the front door of the rack to check whether the RF cables in the rack front are correctly and firmly connected. Check whether connectors are connected correctly and firmly according to the cable labels.

2. Unscrew 6 screws on the cover plate of the rack back and open it. According to the cable labels on the back, check the cables for incorrect connections. Also check the cables on the rack back for loose connections resulting from loading/unloading, especially the internal cables between T1 cables, internal connections of GPS and power cable plugs between power supply busbar on the rack and the boards.
3. Check the DIP switches on the backplane for incorrect setting. According to actual conditions, check the DIP switches on rear interface backplanes of the shelves on the rack for incorrect setting. Refer to Appendix F “Description of DIP Switches on the Backplane in a Base Station”.

14.2 Power-on Procedures

ZXC10 BTSB I28A is initially powered on as follows:

1. Keep boards partially seated in a shelf.
2. Make sure that the power switches of PSMD, PPM, PSMC, PSMB and HPA inside a BTS rack and the fan layer are off.
3. Turn on the power supply outside the rack. If any abnormality is found, please shut down the power supply immediately and check it. The rack will not be powered on until the fault is removed.
4. Plug a PSMD power module into the voltage plane of the rack and turn on the power switch of the power supply outside the rack. If any abnormality is found, please immediately shut down the power supply and check it. The rack will not be powered on until the fault is removed.
5. Turn on the general power switch on the power distribution module (PSMD) on the rack voltage plane and observe the running of PSMD module. If the indicator indicates the voltage of -48V, it shows that everything is normal. When the fan is powered on, the PSMD front panel should give no alarm. If any abnormality is found, please immediately shut down the power supply and check it. The rack will not be powered on until the fault is removed.
6. Turn off the PSMD power module switch and plug in turn other power modules into the rack voltage plane and the BDS layer.

7. Turn on the PSMD power module switch and the turn on one after another other power module switches into the rack voltage plane and BDS layer. If any abnormality is found, please immediately shut down the PSMD power supply and check it. The rack will not be powered on until the fault is removed.
8. Plug all boards into the chassis after all the above power modules are checked. If any abnormality is found, please immediately shut down the power supply and check it. The rack will not be powered on until the fault is removed.
9. Finally, turn on in turn the power switches of the HPA. If any abnormality is found, please immediately shut down the power supply and check it. The rack will not be powered on until the fault is removed.

At this point the power-on of the BTS rack is completed. By means of the front panel indicator (Refer to Appendix H) in a base station, observe with the help of the BSC background controller and test the base station.

Normal power-on procedures of ZXC10 BTSB I28A are as follows:

1. Turn on -48V power switch outside the rack to power the rack, and then Turn on the PSMD power switch. If any abnormality is found, please immediately shut down the power supply and check it. The rack will not be powered on until the fault is removed.
2. Turn on in turn secondary power switches of the plug-in shelf on the voltage plane inside the rack: first Turn on the PSMC on the voltage plane and PPM power module switch. Then, turn on the PSMB power module switch at the BDS layer.
3. Finally, turn on the power switch on HPA board. If any abnormality is found, please immediately shut down the power supply and check it. The rack will not be powered on until the fault is removed.

14.3 Power-off Procedures

The power-off procedures of ZXC10 BTSB I28A are the reversed process of power-on, shown as follows.

1. Turn off the HPA power switch.
2. Turn off the secondary power switches of the shelves of the voltage planes and the BDS layer: first PSMB and then PSMC.

3. Turn off the PSMD power switch on the rack and then the -48V power switch powering the rack outside.

Appendix A Abbreviations

Abbreviation	Full Name
1xEV	1x Evolution
1xEV-DO	1x Evolution Data Only
1xEV-DO	High rate packet data
1xEV-DV	1x Evolution Data & Voice
2F3S	Two carriers and Three sectors
4F3S	Four carriers and Three sectors
A	A Interface—the interface of BSC-MSC
AAA	Authentication Authorization Accounting
Abis	Abis Interface—the interface of BSC--BTS
ATM	Asynchronous Transfer Mode
BDS	Baseband Digital System
BIM	BDS Interface Module
BSC	Base Station Controller
BSS	Base Station System
BTM	BTS Test Module
BTS	Base Transceiver System
CCM	Communication Control Module
CDM	Clock Distribution Module
CHM	Channel Processing Module
CHM-1x	Channel Processing Module for cdma2000
DBS	Database Subsystem
DSM	Data Service Module
EPLD	Electrically Programmable Logic Device
FA	Foreign Agent
FER	Frame Error Rate
FPGA	Field Programmable Gate Arrays
GCM	GPS Control Module
GCM	GPS Clock Module
HA	Home Agent
HDLC	High-level data link control
HDR	High Data Rate
HLR	Home Location Register
HPA	High Power Amplifier
IP	Internet Protocol
LNA	Low Noise Amplifier

Abbreviation	Full Name
MAC	Media Access Control
MBTS	Master BTS
MSC	Mobile Switch Center
MTBCF	Mean Time Between Criteria Faults
MTBF	Mean Time Between Faults
MTTR	Mean Time To Recovery
O&M	Operations and Maintenance
OMC	Operation and Maintenance Center
OSS	Operating System Subsystem
OTD	Orthogonal Transmit Diversity
OW	Order Wire
PA	Power Amplifier
PCF	Packet Control Function
PDSN	Packet Data Serving Node
PP2S	Pulse Per 2 seconds
PPP	Point to Point Protocol
RF	Radio Frequency
RFS	Radio Frequency Subsystem
RIM	Radio Interface Module
RRFS	Remote RFS
RSSI	Received Signal Strength Indicator
RX	Receiver
SAM	Site Alarm Module
SBTS	Slave BTS
SCH	Synchronization Channel
SCS	System Control Subsystem
SDH	Synchronous Digital Hierarchy
SNM	SDH Net Module
STS	Space-Time Spreading
TOD	Time of Date
TX	Transmit
ZXC10-BTSB	Type B BTS