User's Guide

DIGITAL SATELLITE RECEIVER

XTC 5000

XTC MOTORSPORTS INC.

ADDRESS : 205 CHAMPAGNE DRIVE UNIT 3, TORONTO, ON, M3L 2C6, CANADA

DIGITAL SATELLITE RECIEVER

FCC ID : TYV-XTC5000

MODEL NO : XTC 5000

POWER : Input Voltage 90 - 250V AC @ 50Hz/60Hz±5%

CAUTION

RISK OF ELECTRIC SHOCK
DO NOT OPEN

CAUTION : TO REDUCE THE RISK OF ELECTRIC SHOCK, DO NOT REMOVE COVER (OR BACK). NO USER-SERVICEABLE PARTS INSIDE. REFER SERVICING TO QUALIFIED SERVICE PERSONNEL.

This symbol is intended to alert the user to the presence of uninsulated "dangerous voltage" within the product's enclosure that may be of sufficient magnitude to constitute a risk of electric shock to persons.

This symbol is intended to alert the user to the presence of important operating and maintenance (servicing) instructions in the literature accompanying the appliance.

This device complies with part 15 of the FCC Rules, Operation is subject to the following two conditions:

1. This device may not cause harmful interference, and
2. This device must accept any interference received, including interference that may cause undesired operation.

Note: This equipment has been tested and found to comply with the limits for a Class B digital device, pursuant to part 15 of the FCC Rules. These limits are designed to provide reasonable protection against harmful interference in a residential installation. This equipment generates, uses and can radiate radio frequency energy and, if not installed and used in accordance with the instructions, may cause harmful interference to radio communications. However, there is no guarantee that interference will not occur in a particular installation. If this equipment does cause harmful interference to radio or television reception, which can be determined by turning the equipment off and on, the user is encouraged to try to correct the interference by one or more of the following measures:

◎ Reorient or relocate the receiving antenna.
◎ Increase the separation between the equipment and receiver.
◎ Connect the equipment into an outlet on a circuit different from that to which the receiver is connected.
◎ Consult the dealer or an experienced radio/TV technician for help.

Modifications not expressly approved by the manufacturer could void the user's authority to operated the equipment under FCC rules.

"IMPORTANT SAFETY INSTRUCTIONS", or the equivalent. The safety instructions shall include, as applicable to the particular apparatus, the information and warnings listed below:

1) Read these instructions.

2) Keep these instructions.

3) Heed all warnings.

4) Follow all instructions.

5) Do not use this apparatus near water.

6) Clean only with a dry cloth.

7) Do not block any of the ventilation openings. Install in accordance with the manufacturer's instructions.

8) Do not install near any heat sources such as radiators, heat registers, stoves, or other apparatus (including amplifiers) that produce heat.

9) Do not defeat the safety purpose of the polarized or grounding type plug. A polarized plug has two blades with one wider than the other. A grounding type plug has two blades and a third grounding prong. The wide blade or the third prong is provided for your safety. When the provided plug does not fit into your outlet, consult an electrician for replacement of the obsolete outlet.

10) Protect the power cord from being walked on or pinched particularly at plugs, convenience receptacles, and the point where they exit from the apparatus.

11) Only use the attachments/accessories specified by the manufacturer.

12) Use only with a cart, stand, tripod, bracket, or table specified by the manufacturer, or sold with the apparatus. When a cart is used, use caution when moving the cart/apparatus combination to avoid injury from tip-over.

13) Unplug this apparatus during lightning storms or when unused for long periods of time.

14) Refer all servicing to qualified service personnel. Servicing is required when the apparatus has been damaged in any way, such as power supply cord or plug is damaged, liquid has been spilled or objects have fallen into the apparatus, the apparatus has been exposed to rain or moisture, does not operate normally, or has been dropped.

XTC 5000– Digital Satellite Receiver

CONTENTS

	Page
GENERAL INFORMATION	4
Main Feature	4
For your Safety	5
Unpacking	6
General Operation	6
Remote Control Unit	7
Front Panel	8
Rear Panel	9
INSTALLATION	10
Connecting to Antenna & TV	10
Connecting to TV using RF support	10
Connecting to TV using RCA support	11
Connecting to TV using Component	11
Connecting to Digital Amplifier	12
INSTALLATION WIZARD	13
MAIN PAGE	14
USER INSTALLATION	15
Antenna setup - 1) DiSEqC 1.2	15
Antenna setup - 2) Fixed	17
Antenna setup – 3) USALS	18
Channel search -1) DiSEqC 1.2	19
Channel search -2) Fixed	21
Channel search – 3) USALS	22
Multi-SAT Search	23
System setting	24
Parental Lock	25
Factory Default	26

	Page
GENERAL FUNCTION	27
Select Channel	27
Pause the Frame	28
Previous Channel Recall	28
TV&Radio mode	28
TV&VCR mode	28
Channel Information	29
Volume&Audio Control	29
Position	30
CHANNEL MANAGER	31
Channel Manager	31
Favorite Channel	32
Move Channel	32
Lock Channel	33
Rename Channel	33
Delete Channel	34
Sort Method	34
EPG (Electronic Program Guide)	35
TIMER	36
ANTENNA DIRECTION HELP	37
GAME	38
RECEIVER INFORMATION	39
FRONT PANEL DISPLAY	39
TROUBLE SHOOTING	40
SYSTEM SPECIFICATION	42

GENERAL INFORMATION

A XTC 5000 is a convenient product that allows you to view a variety of programs provided through satellite. This user's guide covers the installation of the XTC 5000 and the necessary steps to implement various features. This also explains special features available only in this XTC 5000 in detail, which will allow you to make full of these feature.

Main Feature

- Fully MPEG2, DVB compliant
- PIG (Picture In Graphic) support
- Provide friendly and easy-to-use menu system
- Various channel editing function
  (favorite, moving, locking, renaming, deleting and sorting)
- Stores up to 5000 channels
- Easy and speedy software upgrade through RS-232 port
- Plug-and-play data transfer system (Receiver to Receiver)
- Timer function, automatically turns On/Off by setting function
  (daily, weekly, monthly and one time)
- Automatic reserved channel moving system
- Provide Electronic Program Guide (EPG)
- Antenna positioning help feature
- Digital Audio with AC-3 support by SPDIF
- More than 800 pages OSD Teletext (DVB ETS 300 706) and Subtitle function support
- Support for various video output : CVBS, S-VHS, YUV
- 256 colors On-Screen-Display
- PAL/NTSC automatically conversion
- Last channel automatically saving

GENERAL INFORMATION

For Your Safety

This XTC 5000 has been manufactured to meet international safety standards. Please read all of the safety and operating instructions before operating the product. And keep all safety and operating instructions for future reference.

1. Main Supply : 90-250V AC, 50/60Hz, 30W
2. Overloading
   Do not overload a wall outlet, extension cord, or adapter as this may result in fire electric shock.

3. Liquids
   Do not expose the XTC 5000 to rain or moisture. The apparatus shall not be exposed to dripping or splashing water and that no objects filled with liquids, such as vases, shall be placed on the apparatus.

4. Cleaning
   Disconnect the XTC 5000 from the wall outlet before cleaning. Do not use liquid cleaners or aerosol cleaners. Use a light damp cloth for cleaning.

5. Ventilation
   The slots on top of the XTC 5000 must be left uncovered to allow proper airflow to the unit. Do not stand the XTC 5000 on soft furnishing carpets. Do not expose the XTC 5000 to direct sunlight or do not place it near a heater. Do not stack electronic equipments on top of the XTC 5000 . Keep distance about minimum 10cm from the wall when it's installed.

6. Attachments
   Do not use any attachments not recommended by product manufacturer as they may cause hazards.

7. Connection to the Satellite Dish LNB
   Disconnect the XTC 5000 from the mains before connecting or disconnecting the cable from the satellite dish. FAILURE TO DO SO CAN DAMAGE THE LNB.

8. Connection to the TV
   Disconnect the XTC 5000 from the mains before connecting or disconnecting the cable from the TV. FAILURE TO DO SO CAN DAMAGE THE TV.

9. Earthing
   The LNB cable MUST BE EARTHED to the system earth for the satellite dish. The earth system must comply with SABS 061.

10. Location
    Place the XTC 5000 indoor in order to prevent potential damage from lightning, rain, or direct sunlight.

11. Servicing
    Do not attempt to service this product yourself, as opening or removing covers may expose you to dangerous voltage or other hazards. Refer all servicing to qualified service personnel.

WARNING
RISK OF ELECTRIC SHOCK
DO NOT OPEN

To reduce the risk of electric shock, do not remove cover(or back). No user serviceable parts inside. Refer servicing to qualified service personnel.

This symbol indicates "dangerous voltage" inside the product that presents a risk of electric shock or personal injury

This symbol indicates important instructions accompanying the product

GENERAL INFORMATION

Unpacking

Make sure you have received all the items in the XTC 5000 Satellite Receiver carton.

XTC 5000 (Digital Satellite Receiver)

Remote Control Unit

User's Guide

Batteries

RCA CABLE

General Operation

Throughout this manual you will notice that the everyday operation of your XTC 5000 is based on a series of user friendly on screen display and menus. These menus will help you get the most from your XTC 5000 , guiding you through installation, channel organizing, viewing and many other functions.

All function can be carried out using the buttons on the RCU, and some of the function can also be carried out using the buttons on the front panel.

If at any time when you using the menus you want to return to the normal TV mode, press the TV/AV button.

The XTC 5000 is easy to use, always at your command and adaptable for future advances.

Please be aware that new software may change the functionality of the XTC 5000 .

In the case of your facing difficulties with the operation of your XTC 5000 , please consult the relevant section of this manual, including the Problem Shooting, or alternatively call your dealer or a customer service adviser.

GENERAL INFORMATION

Remote Control Unit (RCU)

Key	Function
⏻	Turns power ON/OFF of the DSR
🔇	When watching a channel, mutes the sound
0 ~ 9	Enter number of the required menu item or select a channel number to watch.
TV/RADIO	Switches between TV and Radio mode
←PR	Switches back to previous channel
FAV	Display the favorite channel list
INFO	Shows information of the current channel
MENU	Press this key one time to run menu on screen, and call command box
⏫ ⏬	Moves up / down a page in the channel list
OK, LIST	Executes the selected item in the menu screen, or enters the desired value in any input mode.
PR+, PR-	When watching a channel, change channels, or moves to the next higher or lower item in the menu.
– +	When watching a channel, adjust the volume, or move to the left or right item in menu
EXIT	Returns to the previous menu on the menu screen or escape from the menu
ALT-AUDIO	When watching a channel, switches the audio languages
EPG	Calls up the EPG (Electronic Program Guide)
L R	Selects the different audio modes.
TV/AV	Switches between TV or AV mode.
Position	Display position bar on the screen to adjust the antenna or for manual search.
⊟	Switches to subtitle and teletext mode.
UHF	Switches to UHF tuning mode
PAUSE	Press once to pause the screen picture, press once again to go to the normal mode
4:3/16:9	Selectable 4:3 letter box and 16:9 screen mode

GENERAL INFORMATION

Front Panel

Key	Function
MENU	Shows the main menu and command box on the screen.
OK	Executes the selected item in the menu.
EXIT	Returns to the previous menu on the menu screen.
⏻	Turns on and off the power of the receiver.
CH	When watching, changing to the previous and next channel, or moves to the next higher or lower item in the menu.
VOL	When watching a channel, adjust the volume or move to the left or right item in the menu.

General Information

Rear Panel

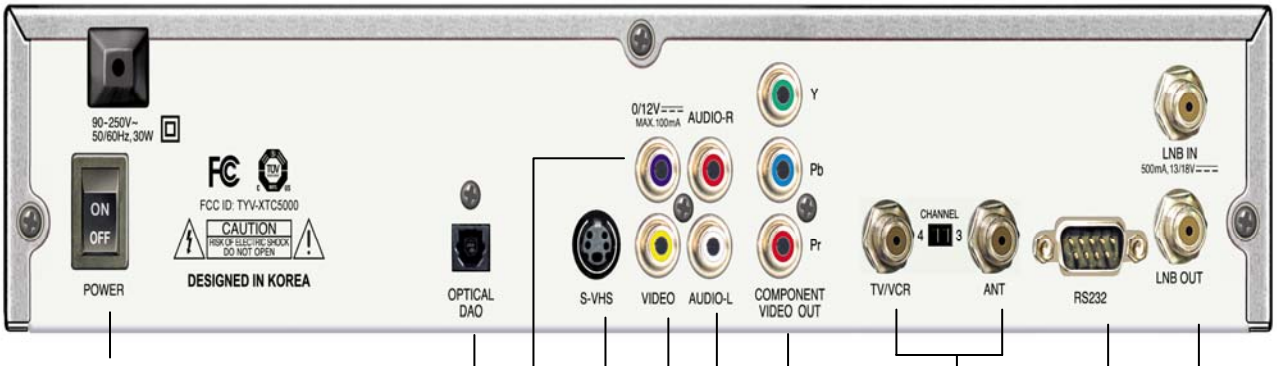

POWER ON/OFF

CONNECT TO OPTICAL DIGITAL AMPLIFIER

CONNECT TO 12V TO AN EXTERNAL 0/12V SWITCH

CONNECT TO THE S-VHS JACK OF TV OR VCR

CONNECT VIDEO TO TV USING RCA JACK

CONNECT TO AUDIO R/L TO TV OR AUDIO TUNER

COMPONENT VIDEO OUT : CONNECT TO COMPONENT VIDEO INPUTS OF TV

CONNECT TO AUDIO R/L TO TV OR AUDIO TUNER

CONNECT TO A PC FOR S/W UPGRADE

LNB IN : CONNECT TO SATELLITE ANTENNA LNB OUT : CONNECT TO THE OTHER RECEIVER

Installation

This section explains the installation of XTC 5000. Refer to the manuals supplied with the equipment for the installation of outdoor equipment such as the dish antenna. When adding new equipment, be sure to refer to the related parts of the manual for the installation.

Connecting to ANTENNA & TV

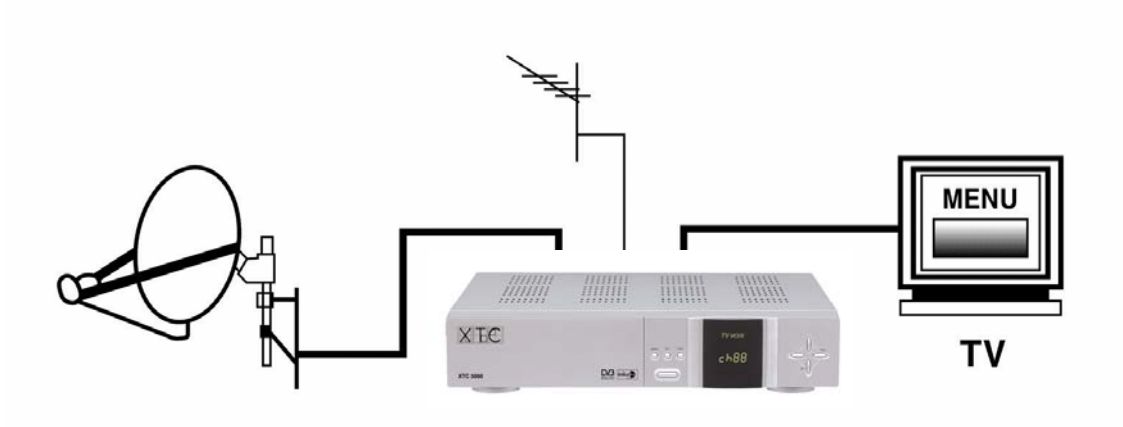

Connecting to TV using RF support

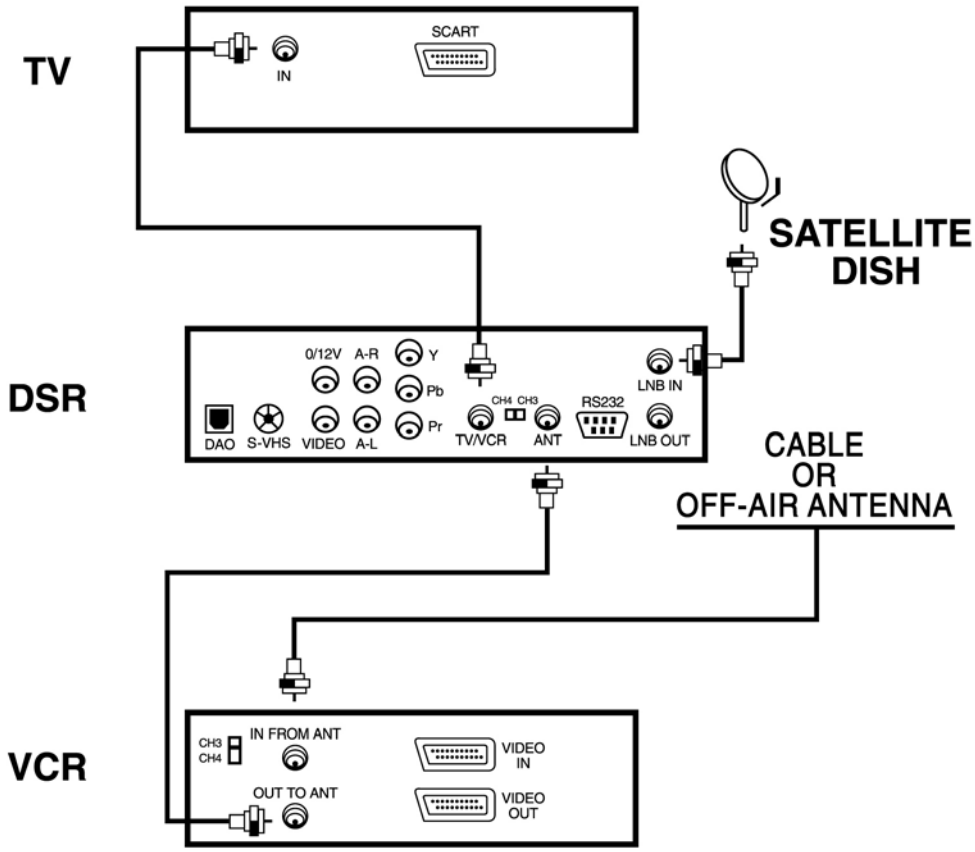

Installation

Connecting to TV using RCA support

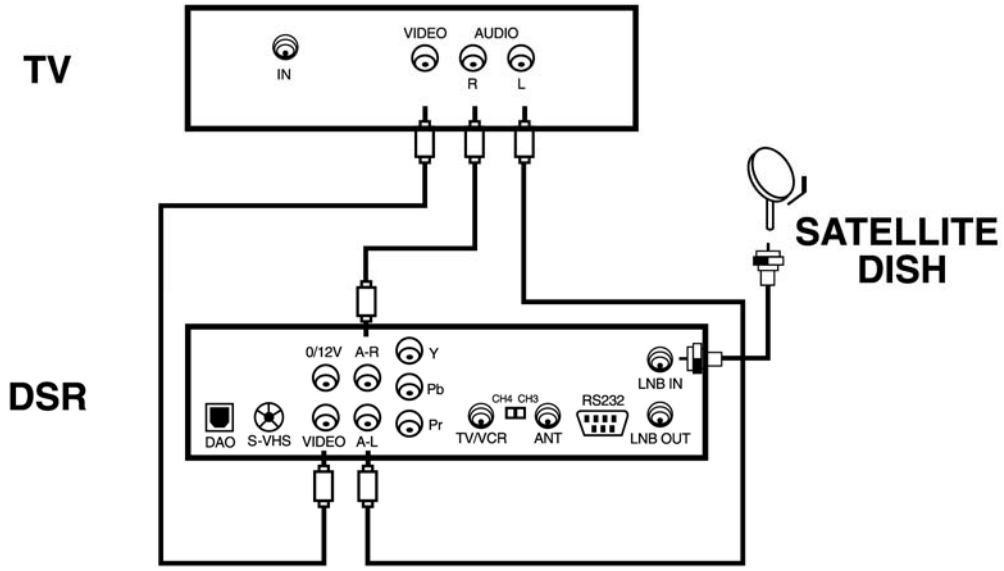

Connecting to TV using Component support

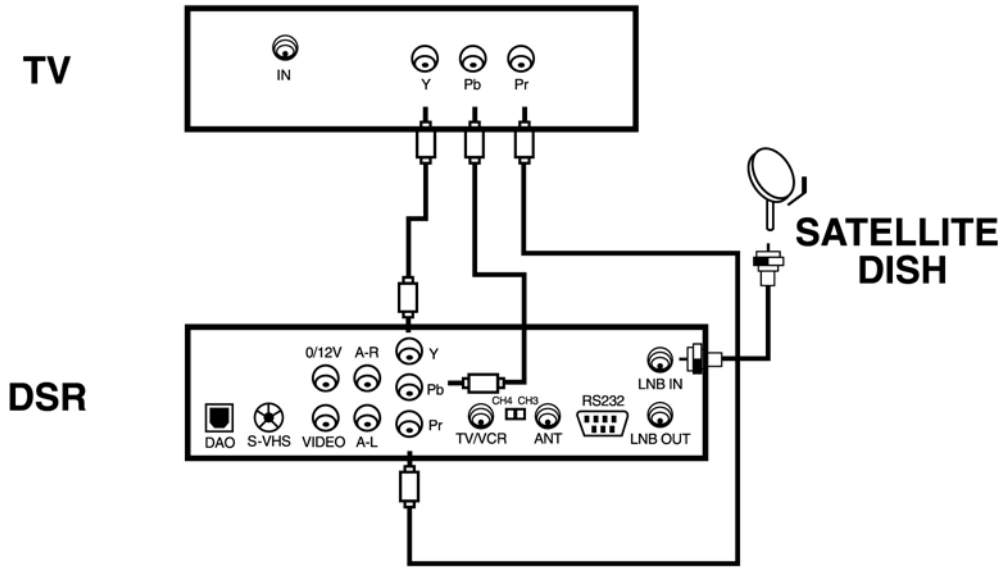

Installation

Connecting to Digital Amplifier

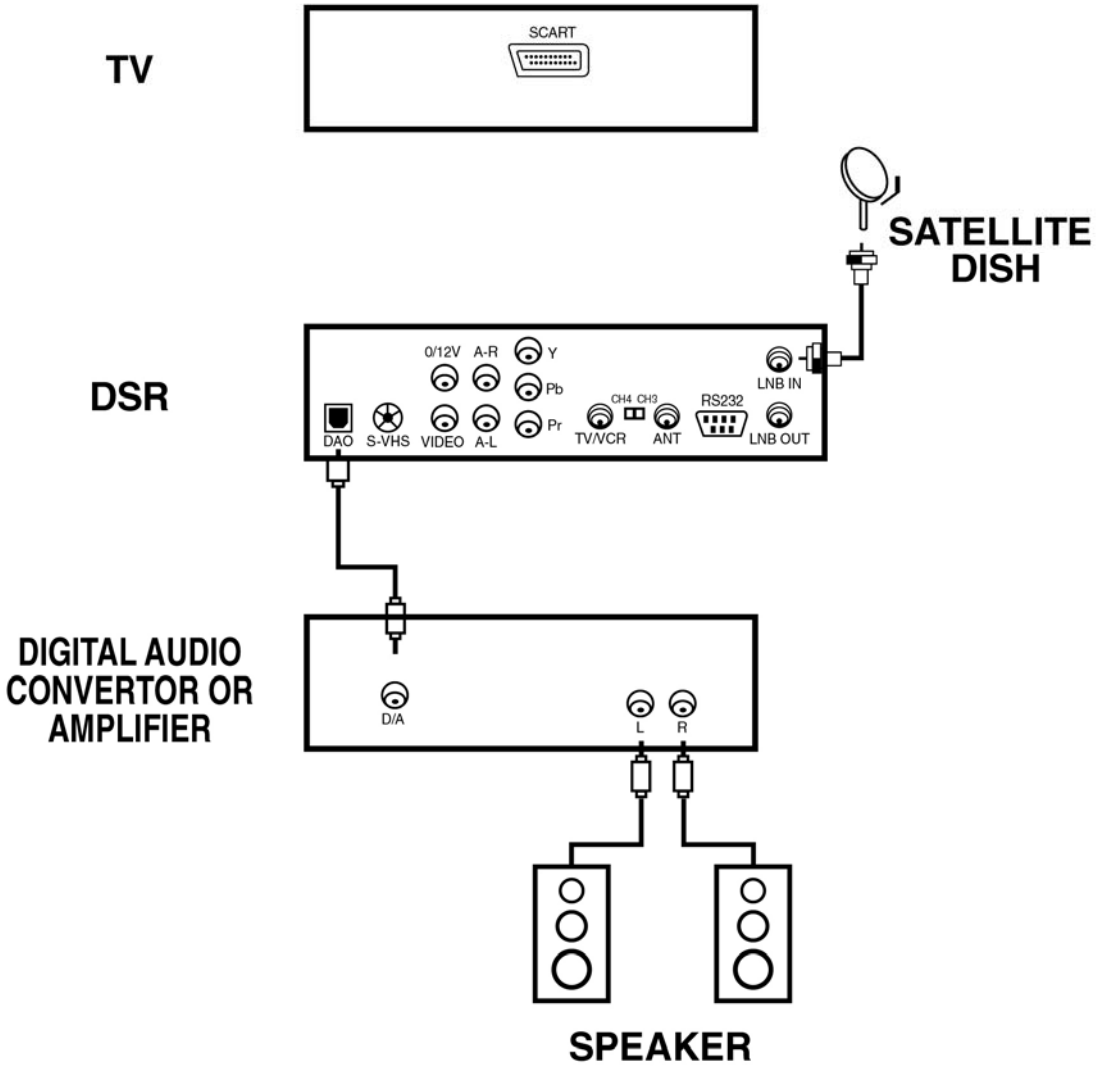

INSTALLATION WIZARD

Once you properly install and connect cables of the receiver and turn the power on, the Installation wizard will be automatically displayed as below.

You can start from this Installation wizard which enables end-users to set up the receiver from a factory default or you can push CANCEL to set up the receiver from the main page.

You can choose your preference for language and you can push NEXT to move to next step or simply push CANCEL to go to a main page.

In next page, you can set up a timer and see a full list of satellite and push NEXT to set up an Antenna set up and channel search through this installation wizard.

MAIN PAGE

You can set up all the necessary functions and settings for the XTC 5000 in this main page

The main menu has 5 sub-menus as follows.

- Channel Manager
- Program Guide
- Timer
- User Installation
- Utility

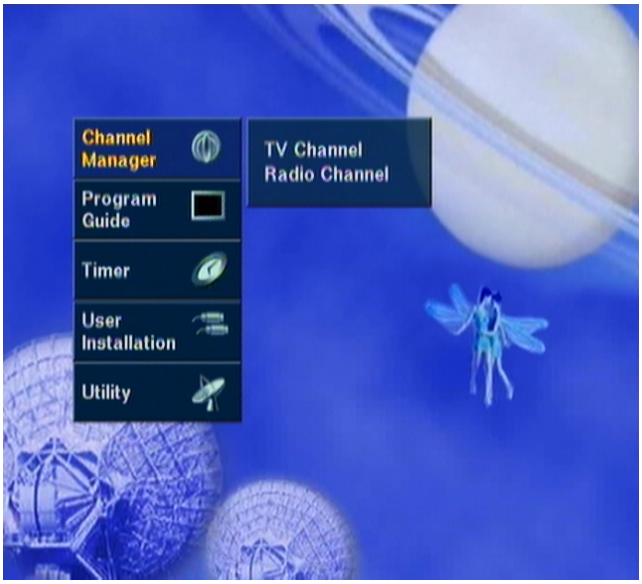

To move up and down, press “PR+ or PR-”. To move left and right, press keys on the RCU. Place cursor on the “User Installation”, then sub-menu will be displayed on the screen. (Refer to the picture)

USER INSTALLATION

This menu consists of 5 major sub-menus as below.

- **Antenna Setup**
- **Channel Search**
- **System Setting**
- **Parental Lock**
- **Factory Default**

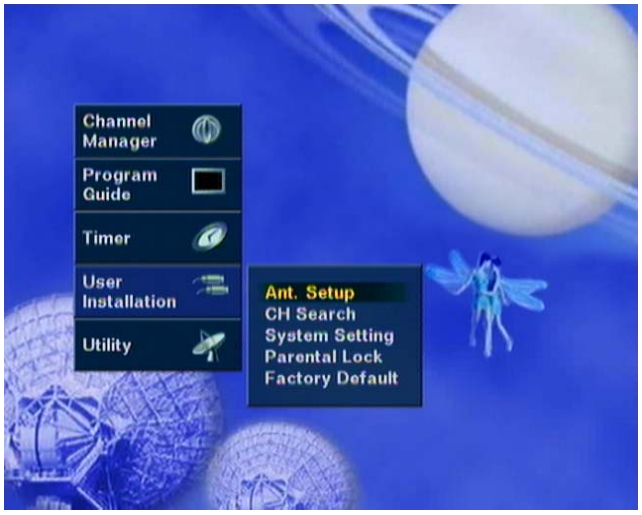

Antenna Setup-1) DiSEqC 1.2

1)Antenna : You can select maximum 16 antennas with the combination switches.

2) Satellite : Select your preferable satellite

3) LNB1, 2

: Enter the proper LNB frequency referring to your LNB using numeric key on the RCU or use KEY PAD displayed by pressing OK key.

If you have a dual LNB, enter the proper value in the both of value box.

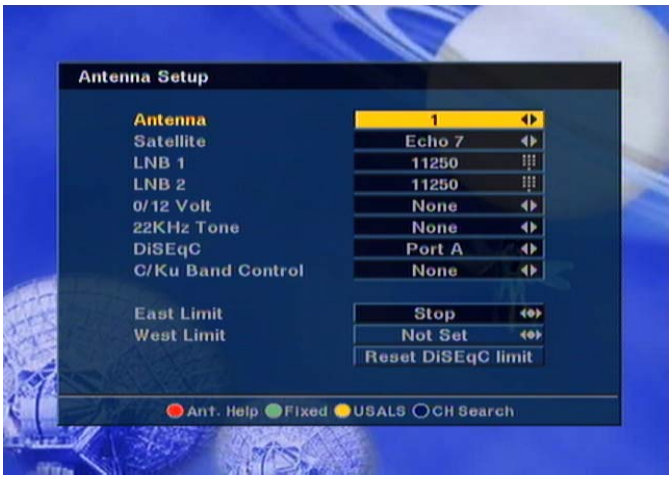

4) Switches (0/12 Volt, 22KHz Tone/ DiSEqC) : You can select the switches with which you want to configure the antenna.

5) C/Ku band control : You can select C/Ku band control by switches types.

6) East, West Limit

: Press E key on the RCU until your antenna will be reach to be easternmost and then press OK key on the RCU. The message of “Would you like to set East limit of DiSEqC motor?” will be displayed for your confirmation, please select OK button by pressing OK key on the RCU and then East limit value will be changed as SET.

The usage of West limit is same as East limit.

7) Reset DiSEqC limit

: If you want to reset the East limit or West limit, place a cursor on Reset DiSEqC Limit button and then press OK key on the RCU. The message of “Would you like to reset limit for DiSEqC positioner?” will be displayed for your confirmation, please select OK button by pressing OK key on the RCU.

The cursor will move to the East limit button so that you can reset the limit. After that, please reset West limit same as before.

After setting all necessaries, please push ● **CH Search** on your Remote to finish antenna setup menu and move to channel search page.

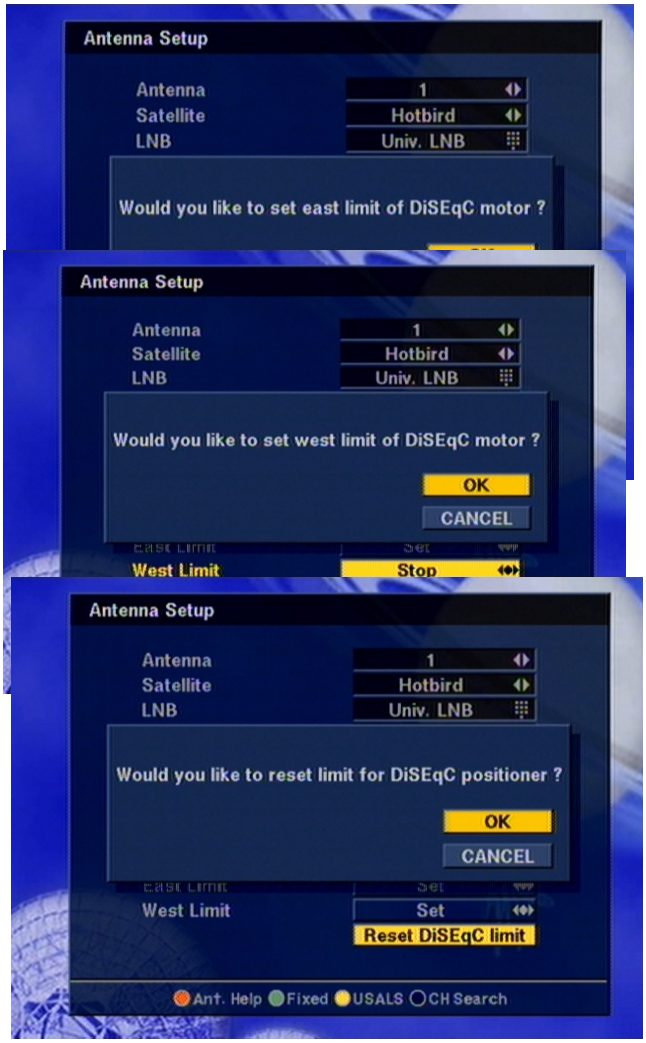

★ Short-Cut Color Keys ★

- ● **Ant.Help : Antenna set-up page**
- ● **Fixed : Fixed/ DiSEqC**
- ● **USALS : USALS function**
- ● **CH Search : Channel search page**

USER INSTALLATION

Antenna Setup-2) Fixed

1) Antenna : You can select maximum 16 antenna with the combination switches.

2) Satellite : Select your preferable satellite

3) LNB1, 2

: Enter the proper LNB frequency referring to your LNB using numeric key on the RCU or use KEY PAD displayed by pressing OK key.

If you have a dual LNB, enter the proper value in the both of value box.

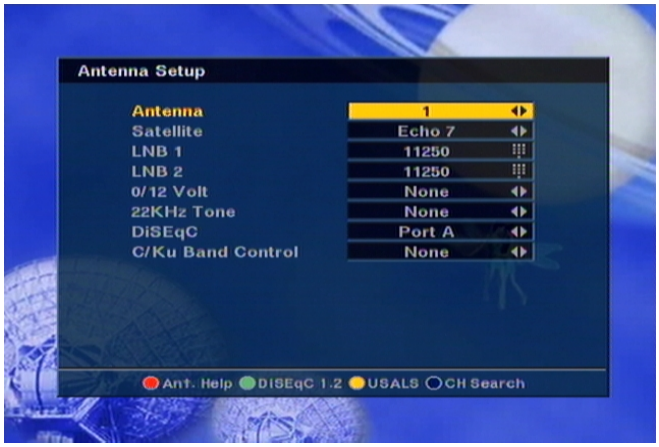

4) Switches (0/12 Volt, 22KHz Tone/ DiSEqC) : You can select the switches with which you want to configure the antenna.

5) C/Ku band control : You can select C/Ku band control by switches types.

After setting all necessaries, please push ● **CH Search** on your Remote to finish antenna setup menu and move to channel search page.

USER INSTALLATION

Antenna Setup-3) USALS

1)Antenna : You can select maximum 16 antennas with the combination switches.

2) Satellite : Select your preferable satellite

3) LNB1, 2

: Enter the proper LNB frequency referring to your LNB using numeric key on the RCU or use KEY PAD displayed by pressing OK key.

If you have a dual LNB, enter the proper value in the both of value box.

the proper value in the both of value box.

4) Switches (0/12 Volt, 22KHz Tone, DiSEqC)

: You can select the switches with which you want to configure the antenna.

5) C/Ku band control : You can select C/Ku band control by switches types.

**** The default value is "OFF".***
**** Precondition for using USALS function.***
-> Check if the position of the antenna motor is on "0" degree.
-> Now the maximum limit of the antenna is 1 meter.

When you choose the satellite of which you want to use the USALS function, its direction and longitude will be displayed.

Input Your Longitude and Your Latitude.

(Please refer to the manual attached to the USALS Motor.)

It will search for "Satellite Location" and automatically go to the Channel Search screen.

After setting all necessaries, please press **"Go to Sat Position"** to finish USALS antenna setup menu and move to channel search page.

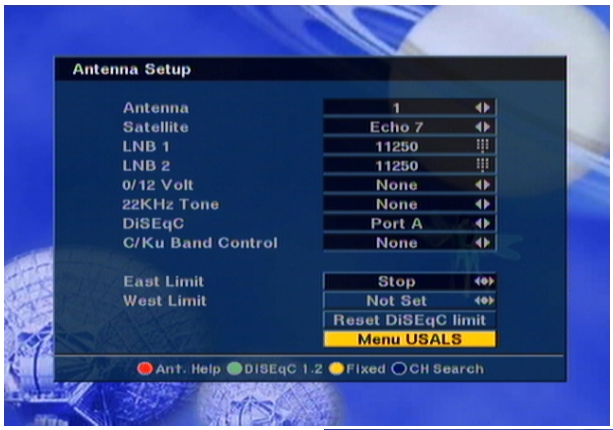

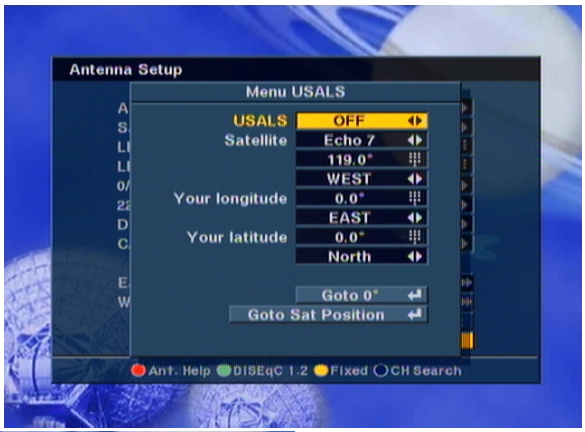

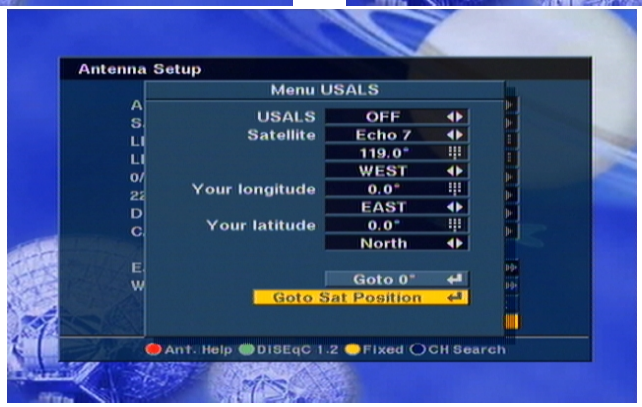

USER INSTALLATION

Channel Search-1)DiSEqC 1.2

1) Antenna : Select your antenna number.

2) Satellite : Select a satellite using keys or if you press OK key. Then, the list of satellite will be displayed so that you can select easily.

You can see the information of the selected satellite in the right side.

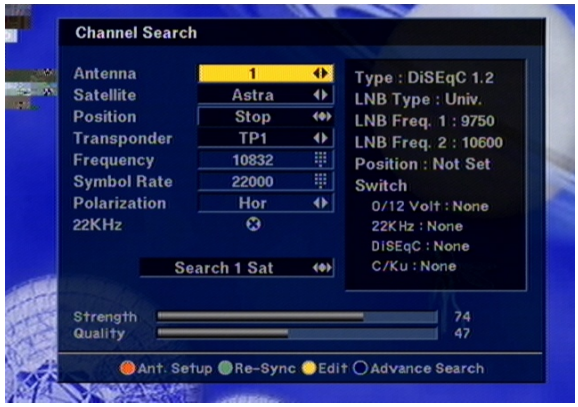

3) Position : After selecting a satellite, please select Position button and then keep pressing E or W key on the RCU until selected satellite is locked. If the satellite is locked correctly, the white color of signal label bar will be changed to yellow.

When you press OK key on the RCU, the message of "Would you like to set the value of current positioner?" will be displayed for your confirmation.

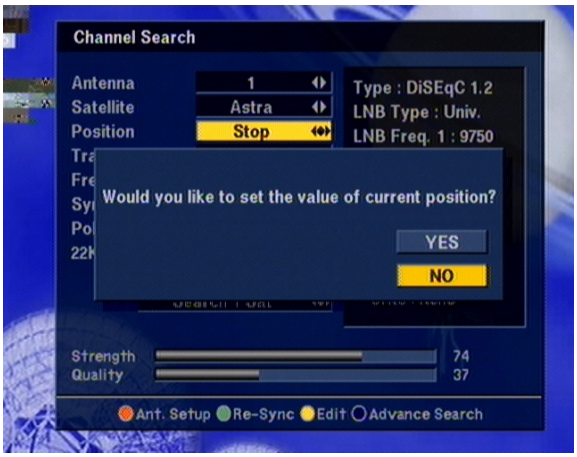

4) Transponder

: Press OK key to select one of the transponders

5) Frequency, Symbol Rate, Polarization & 22KHz

: You can press **Edit** key on the RCU and choose "Modify TP On/Off" to change the values in these functions.

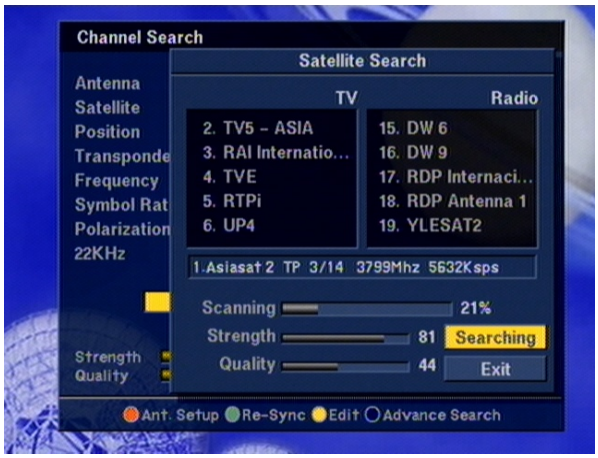

6) ● CH Search/ Advance

★ Selection : All/ FTA Only

You can search either All channels or FTA only

★ Sort : FTA/ CAS/ A~Z/ OFF

You can search either FTA channels, Scrambled channels, A~Z or all channels.

★ NIT : On/ Off

Search Channels transmitted by satellite network information table (NIT)

★ Search : SAT/ TP/ PID

1) Search channels in one satellite which selected on Satellite column.
2) Search channels in one TP which selected on TP column.
3) Search channels in one PID which selected on PID column

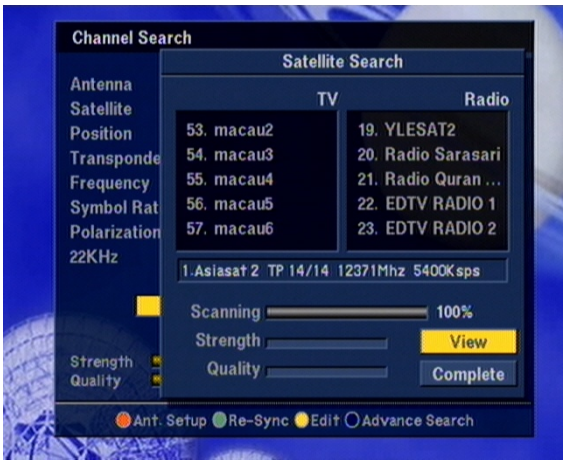

7) Delete TP

: You can press ● **Edit** key and select "Delete TP" to delete any of the transponders listed.

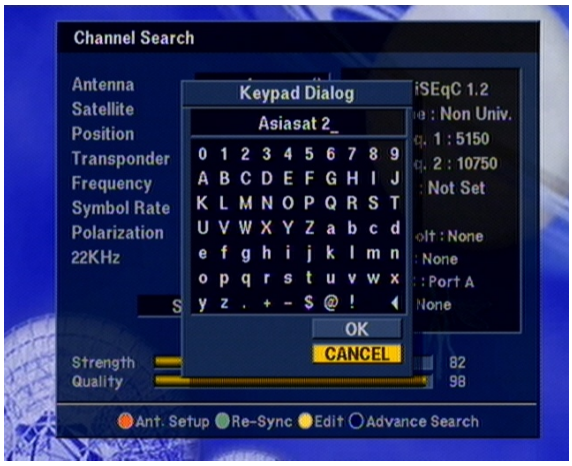

8) Rename SAT

: If you want to change the name of a satellites, select a satellite and press ● **Edit** key and choose "Rename SAT" and keypad dialog box will be displayed and then you can change the name of a satellite by using an arrow keys on the key pad.

9) Search : After all the set up for a channel search, you can press "SEARCH" to scan the channels by a satellite, TP or network.

★ Short-Cut Color Keys ★

● **Edit (Edit Mode)**:

Please press ● Edit key on the RCU to display the sub-command box and edit the pre-programmed data such as Frequency, Symborate, Polarization, 22KHz.

You can also use "Delete TP" & "Rename SAT" as well in this Edit Mode.

● **Re-Sync**

When all location of searched satellites are shifted by unknown reason, you can realign all of them at once if you adjust one satellite's location.

Channel Search-2) Fixed

1) Antenna : Select your antenna number.

2) Satellite : Select a desired satellite using ⊿ ⊾ keys or if you press OK key, the list of satellite will be displayed so that you can select easily.

You can see the information of selected satellite in the right side.

4) ~ 9) Please refer to DiSEqC 1.2 type antenna.

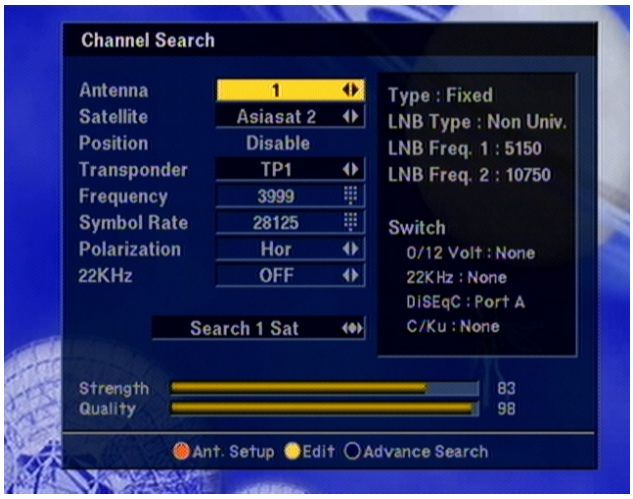

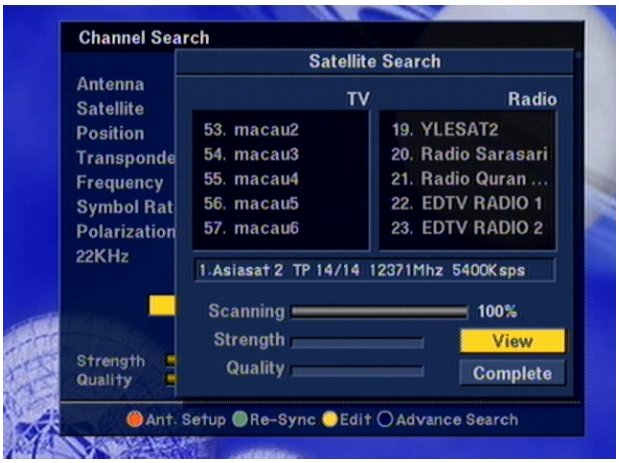

★ Short-Cut Color Keys ★

Edit (Edit Mode):

Please press Edit key on the RCU to display the sub-command box and edit the pre-programmed data such as Frequency, Symborate, Polarization, 22KHz.

You can also use “Delete TP” & “Rename SAT” as well in this Edit Mode.