Singing Machine

Model number: SDL9035
Version: Costco US
Date: 11th May, 2016

carnaval

PMS 427U

PMS 032U
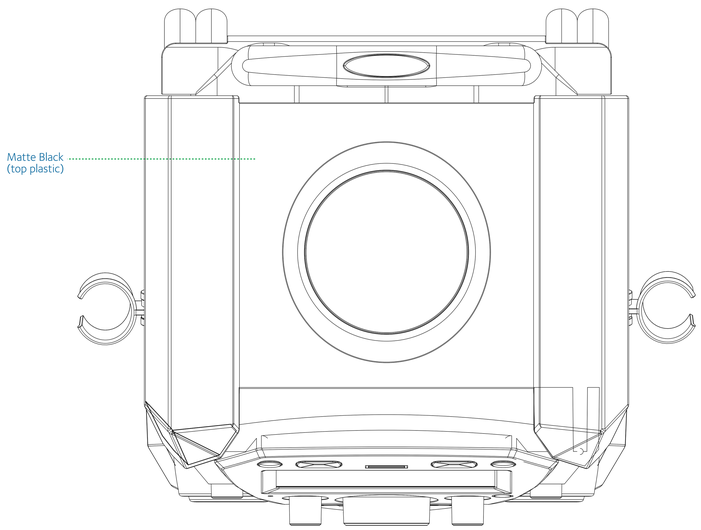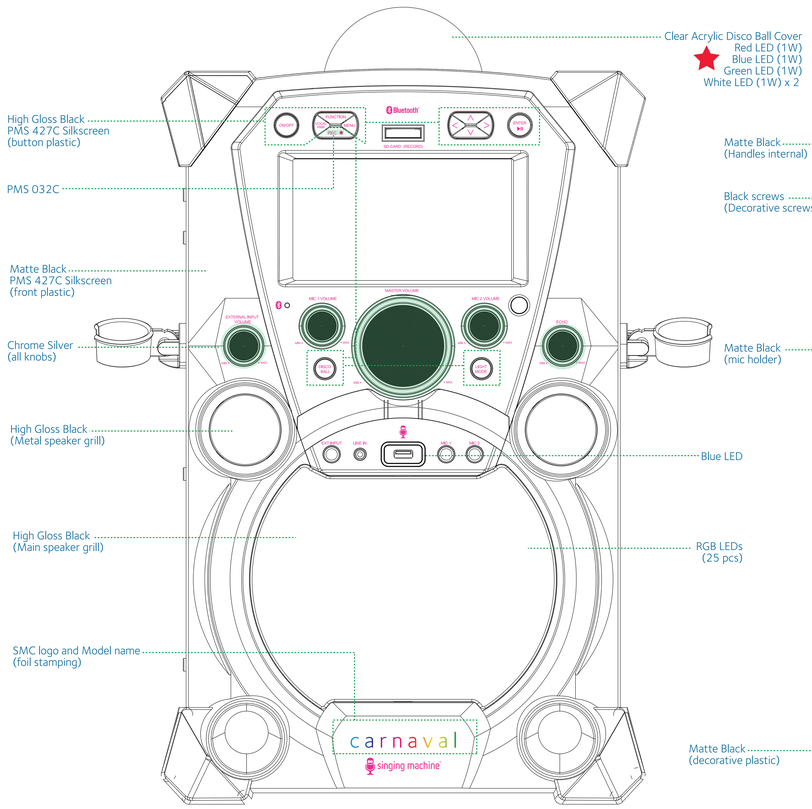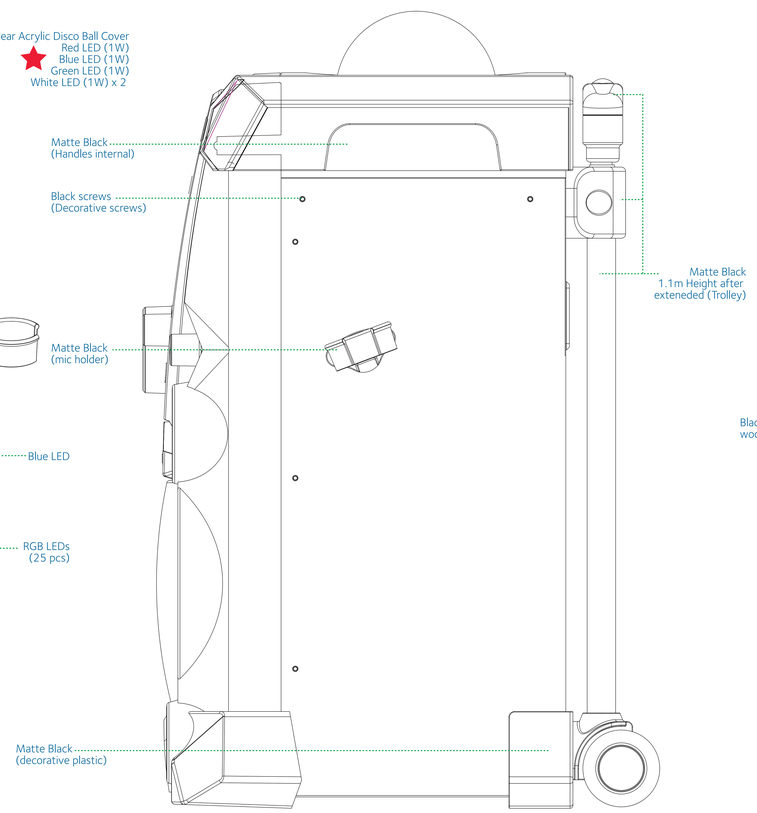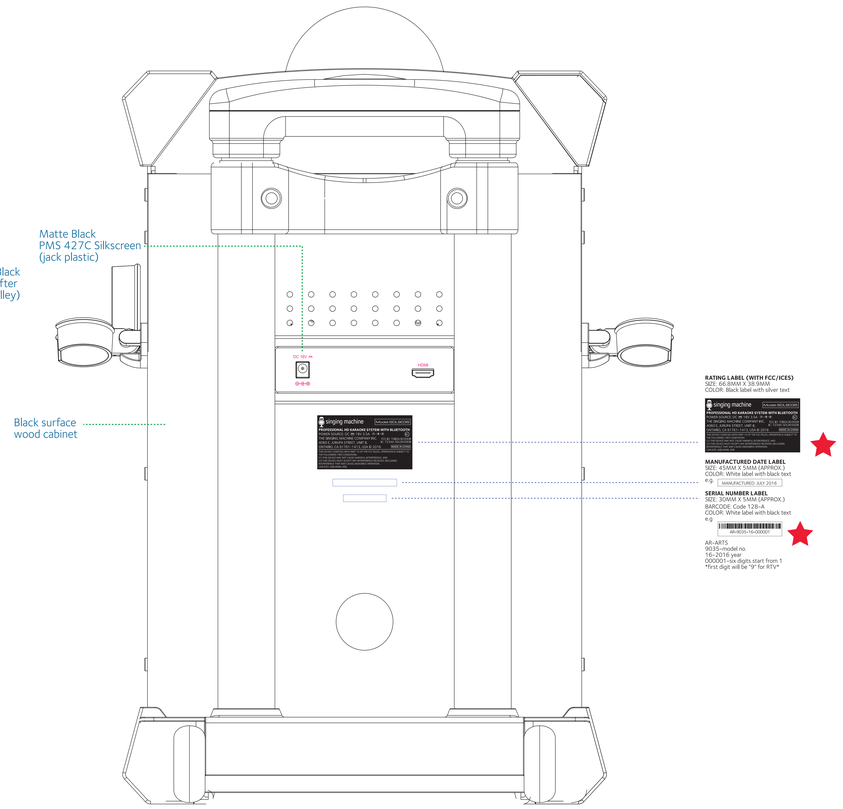
CHANGES