Singing Machine

Model number: SDL9037
Version: Sam's Club US
Date: 11th May, 2016

fiesta

PMS 427U

PMS 032U
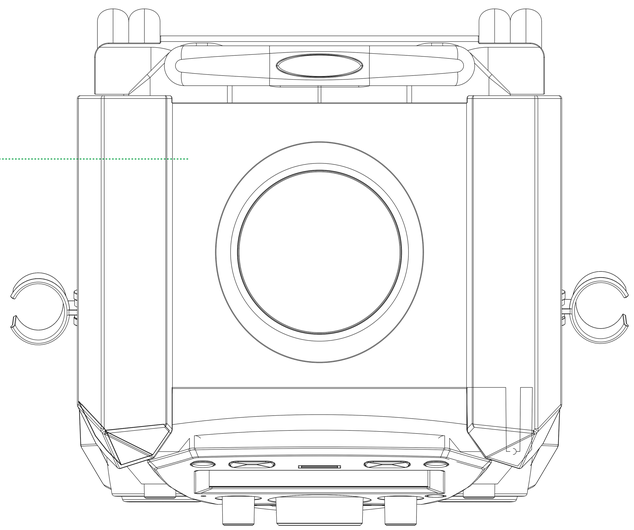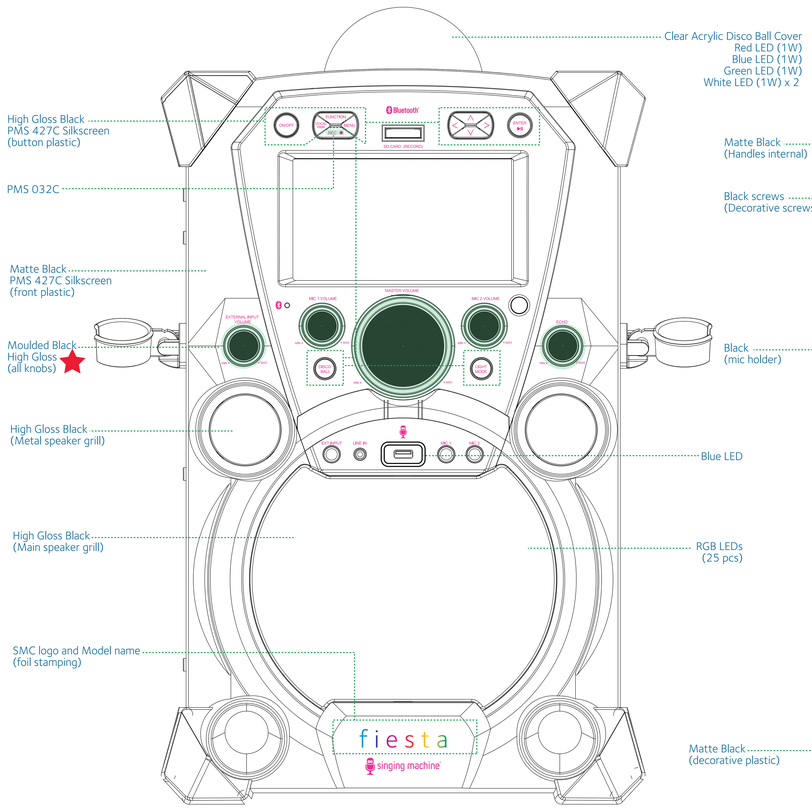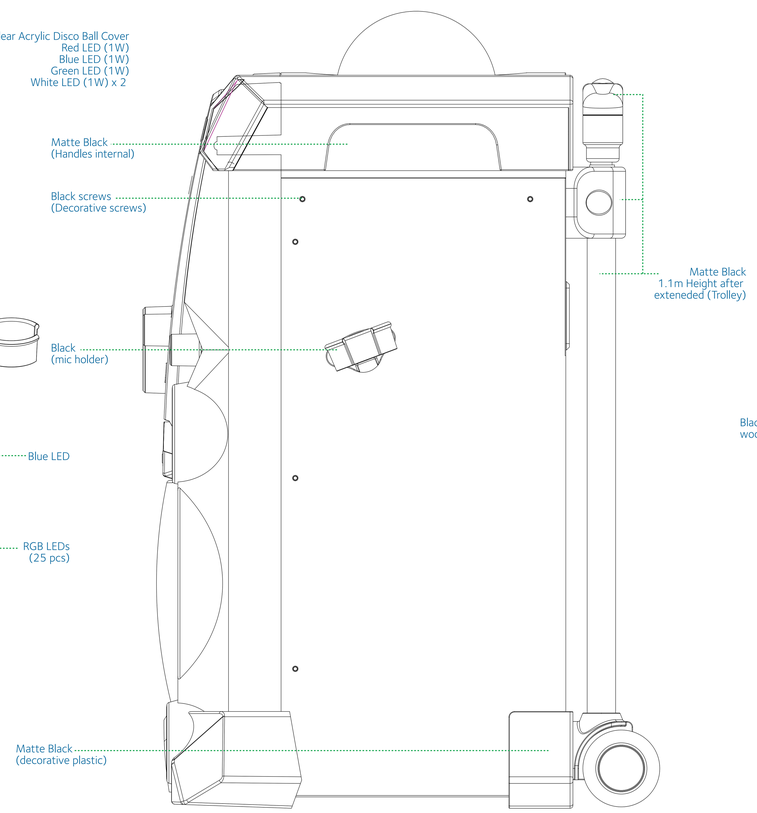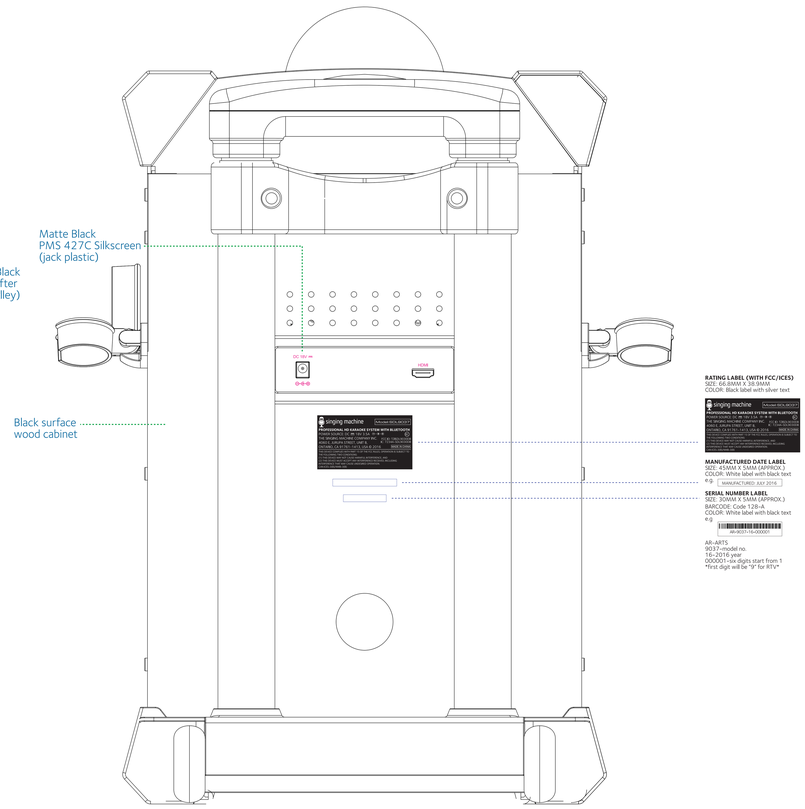
CHANGES