Specifications &Equipment

Length: 600mm
Height: 170mm
Main Rotor: 520/570mm
Tail Rotor: 130/140mm
Motor Drive Gear: 10T
Main Drive Gear: 140T
Autorotation Tail Drive Gear: 48T
Tail Drive Gear: 8T
Drive Gear Ratio: 1:14/1:6
Weight: 360/350

Recommended Power and Radio Equipment(Not included in kit)

Lithium Battery: DC11.1V (1400mAH Lithium Polymer battery)
DC9.6V (700mAH Ni-Mh)
Motor370: 3000KV
ESC: 1-15A
Transmitter: 6 channel or more (Helicopter System)
Receive: 6 channel or more
Gyro: 1pc
Servo: 6gx3pcs

NO: 3DSM-01
3DSM-02

Lynx-380XL

3D R/C-HELICOPTER

INSTRUCTION MANUAL

Thank you for buying CLC Products. The Lynx-380XL is the latest technology in Rotary RC models. Please read this manual carefully before assembling and flying the new Lynx-380XL helicopter.We recommend that you keep this manual for future reference regarding tuning and maintenance.

CONTENTS

PAGE 1	IMPORTANT NOTES & SAFETY NOTES
PAGE 2	STANDARD EQUIPMENT
PAGE 3	MAIN ROTOR INSTALLATION
PAGE 4	MAIN ROTOR INSTALLATION
PAGE 5	MAIN ROTOR INSTALLATION
PAGE 6	MAIN WHEEL GEAR & BATTERY INSTALLATION
PAGE 7	TAIL ROTOR INSTALLATION
PAGE 8	EXPLODE DIAGRAM（3DSM-01）
PAGE 9	EXPLODE DIAGRAM（3DSM-02）
PAGE 10	PRE-FLIGHT CHECKLIST
PAGE 11	PRE-FLIGHT CHECKLIST
PAGE 12	NAME AND HANDLING OF EACH PART
PAGE 13	CONNECTION OF THE MIXING CONTROLLER
PAGE 14	CONNECTION OF THE MIXING CONTROLLER & CLC RECEIVER WIRING
PAGE 15	OPERATION AND ADJUSTMENT
PAGE 16	OPERATION AND ADJUSTMENT & MAIN ROTOR ADJUSTMENTS
PAGE 17	REGULAR MAINTENANCE
PAGE 18	MAIN SPARE PARTS
PAGE 19	MAIN SPARE PARTS

WELCOME TO CLC R/C MODEL PRODUCTS

Thank you for buying CLC Products. The Lynx-380XL Helicopter is designed as easy to use, full featured Helicopter R/C model capable of all forms of rotary flight. Please read the manual carefully before assembling the model, and follow all precautions and recommendations located within the manual. Be sure to retain the manual for future reference, routine maintenance, and tuning. The Lynx-380XL is a new product developed by CLC. It features the best design available on the Micro-Heli market to date, providing flying stability for beginners, full aerobic capability for advanced fliers, and unsurpassed reliability for customer support.

IMPORTANT NOTES

R/C helicopters, including the Lynx-380XL are not toys. R/C helicopters utilize various high-tech products and technologies to provide superior performance. The rotating blades on the model spin at high speed and can cause potential risk or injury if used improperly. It is mandatory that you observe all R/C safety rules and adhere to local laws as applicable. We recommend that you contact your local hobby store and inquire about safety, rules, regulations, and local laws and statutes regarding R/C model operation in your area. Please make sure to be conscious of your own personal safety and the safety of others and your environment when operating all CLC products. When used properly, CLC R/C products will provide years of R/C entertainment.

It is not a Toy!

We recommend that you obtain the assistance of an experienced pilot before attempting to fly our products for the first time. A local expert is the best way to properly assemble, setup, and fly your model for the first time.

The Lynx-380XL requires a certain degree of skill to operate, and is a consumer item. Any damage or dissatisfaction as a result of accidents or modifications are not covered by any warrantee and cannot be returned for repair or replacement. Please contact our distributors for free technical consultation and parts at discounted rates when you experience problems during operation or maintenance.

Note: Fly only in safe areas, away from other people. Do not operate R/C aircraft within the vicinity of homes or crowds of people. R/C aircraft are prone to accidents, failures, and crashes due to a variety of reasons including, lack of maintenance, pilot error, and radio interference. Pilots are responsible for their actions and damage or injury occurring during the operation or as of a result of R/C aircraft models.

SAFETY NOTES

1. Locate an appropriate location:

   R/C helicopters fly at high speed, thus posing a certain degree of potential danger. Choose an appropriate flying site consisting of flat, smooth ground, a clear open field, or a large open room, such as gymnasium or warehouse without obstacles. Do not fly near buildings, high voltage cables, or trees to ensure the safety of yourself, others, and your model. Do not fly your model in inclement weather, such as rain, wind, snow, or darkness.

2. Obtain the assistance of an experienced pilot:

   Before turning on your model and transmitter, check to make sure no one else is operating on the same frequency. Frequency interference can cause your model, or other models to crash. The guidance provided by an experienced pilot will be invaluable for the assembly,tuning,trimming,and actual first flight (Recommend you to practice with simulated flying software.)

3. Always be aware of the rotating blades:

   During the operation of the helicopter, the main rotor and tail rotor will be spinning at a high rate of speed. The blades are capable of inflicting serious bodily injury and damage to the environment. Be conscious of your actions, and careful to keep your face, eyes, hands, and loose clothing away from the blades. Always fly the model a safe distance from yourself and others, as well as surrounding objects. Never take your eyes off the model or leave it unattended while it is turned on. Immediately turn off the model and transmitter when you have landed the model.

PREVENT MOISTURE & KEEP AWAY FROM HEAT

R/C models are composed of many precision electrical components.

It is critical to keep the model and associated equipment away from moisture and other contaminants.

The introduction or exposure to water or moisture in any form can cause the model to malfunction resulting in loss of use,or a crash.

Do not operate or expose to rain or moisture .

R/C models are made up various forms of plastic.

Plastic is very susceptible to damage or deformation due to heat.

Make sure not to store the model near any source of heat such as an oven,or heater.

It is best to store the model indoors,in a climate-controlled,room temperature environment.

STANDARD EQUIPMENT

Lynx380XL EP-Helicopter Kit×1pc

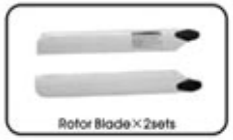

Rotor Blade×2sets

Decal×1pc

RADIO TRANSMITTER AND ELECTRONIC EQUIPMENT REQUIRED FOR ASSEMBLY

Transmitter
6-channel helicopter system

RX+Speed controller+Gyro

Actiyator

Servo

POWER SYSTEM REQUIRED FOR ASSEMBLY

290-ED-4529 Motor

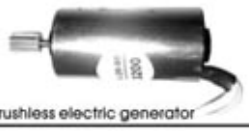

Brushless electric generator

Battery

TOOLS REQUIRED FOR ASSEMBLY

Scissors

Cutter Knife

Quick Dry Glue

Nipper

Screwdriver

MAIN ROTOR INSTALLATION

Start assembling the model by beginning with the main rotor head. We will build the model from the rotor head. Out to the rest of the model. Apply silicon lubricant in the inside and outer edges of the o-rings, then insert them into the main rotor head. The fly bar ends must be the same length on each side of the rotor head. Measure the distance between the edge of the fly bar paddle and the fly bar control arm; make this distance the same on both sides. The fly bar control arms must be parallel to each other. The fly bar paddles must be locked in the same position, exactly horizontally level with the swashplate. Use an angle of attack ruler on each fly bar paddle and adjust the angles so that they are the same, and have the correct angle. It may become necessary to apply some glue on the screws to properly tighten them. The screws must be tightened snugly, but be careful to not overtighten them as it will strip the threads and cause the assembly to become loose.

Note:After tightening the fly-bar control arms and paddles,check for free movement and minimal gaps between the surfaces.All rotor head assemblies should be assembled tightly snug,without any binding or slow movement.

When you see the marks as below,please use glue or oil to ensure flying safety.

CA:Use Cyanoacrylate Adhesive to fix
R48:Use anaerobics retainer to fix.
Oil:Add lubricant .

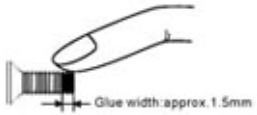

R48 is very adhesive
Apply a little R48 on the screw and wipe surplus off.
When disassembling,recommend to toast the metal joint about 15seconds.
(NOTE:Keep plastic parts away from heat.)

NO.	PN	Part NO.	Part Name	Q'TY	Specification
01	3DM2	S-3DM1-R01	Main rotor hoseptipe	1x2	Rubber
02	3DM2	W-3DM-01	Main rotor shaft	1x1	Stainless steel
03	3DM2	W-3DM-10	Main rotor medium	1x2	Copper
04	3DM2	W-3DM-22	Main rotor bearings	1x4	ø3x6x2.5
05	3DM2	S-3DM1-09	Main rotor collet	1x2	

NO.	PN	Part NO.	Part Name	Q'TY	Specification
06	3DM2	W-3DM-26	Main rotor screw	1x2	M1.7x9.2
07	3DM8	W-3DM-23	Inside control arf bearings	1x2	ø3x6x2.5
08	3DM8	W-3DM-24	Inside control arf screw	1x2	M1.4x6.4
09	3DM8	W-3DM-06	Main shaft bolt	1x1	ø1x10
10	3DM8	W-3DM-08	Stator main shaft screw	1x1	M1.2x8

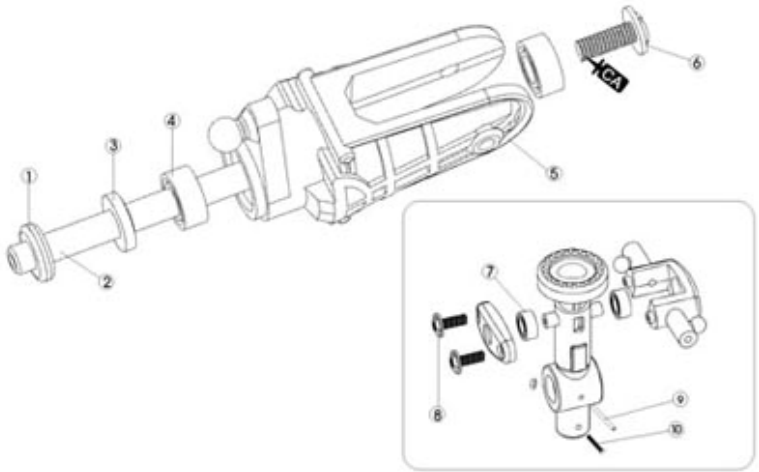

MAIN ROTOR INSTALLATION

NO.	PN	Part NO.	Part Name	Q'TY	Specification
11	3DM1	W-3DM-03	Stabilizing blade setscrew	1x2	6.6x11.8
12	3DM1	W-3DM-05	stabilizing blade beam stator	1x2	4-6x5
13	3DM5	S-3DM1-36	Plastics main rotor	1x2	
14	3DM6	S-3DM1-17	Server conjunction collet	1x3	
15	3DM6	S-3DM1-14	Internal fitting panel Piece	1x3	
16	3DM6	W-3DM-12	Internal fitting panel bar	1x3	M1.5x12
17	3DM1	S-3DM1-10	Stabilizing blade	1x2	

NO.	PN	Part NO.	Part Name	Q'TY	Specification
18	3DM10	W-3DM-09	Main shaft setscrew	1x1	Alnico
19	3DM10	W-3DM-02	Main shaft	1x1	Stainless steel
20	3DM8	S-3DM1-048	Internal control panel	1x1	
21	3DM8	S-3DM1-02	Main bearings cover	1x1	
22	3DM8	S-3DM1-04A	Internal control panel	1x1	
23	3DM9	S-3DM1-05	External control panel	1x1	
24	3DM21	P-S-3DM1-08	Stabilizing blade shaft	1x1	Carbon fiber
25	3DM1	W-3DM-27	Stator voice rotor	1x6	M2.5x4

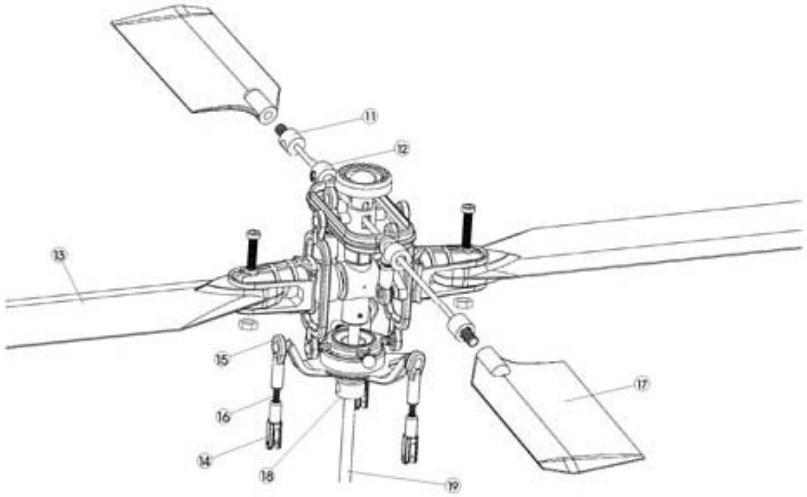

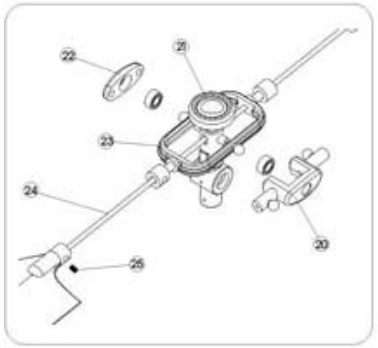

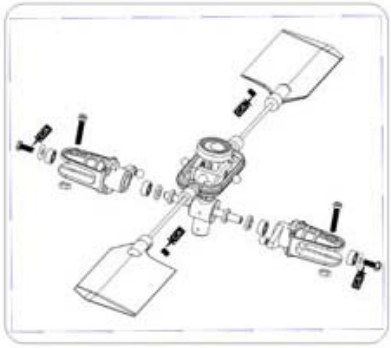

MAIN ROTOR INSTALLATION

NO.	PN	Part NO.	Part name	Q'TY	Specification
26	3DM2	W-3DM-25	Stator main rotor screw	1x2	M1.9x14
27	3DM2	W-3DM-25-A	Stator main rotor nut	1x2	M1.9
28	3DM4	S-3DM1-08	Control dish links	1x2	
29	3DM10	W-3DM-28	Stator main bearing	1x1	M3.0x3
30	3DM6	S-3DM1-07	Ball control conjunction	1x4	

NO.	PN	Part NO.	Part name	Q'TY	Specification
31	3DM5	S-3DM1-11	Top incline panel	1x1	
32	3DM5	S-3DM1-13	Down incline panel	1x1	
33	3DM15	S-3DM1-16B	Feet shelf holder	1x2	
34	3DM15	S-3DM1-16A	Feet Shelf	1x2	

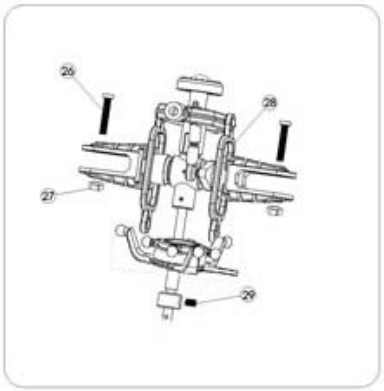

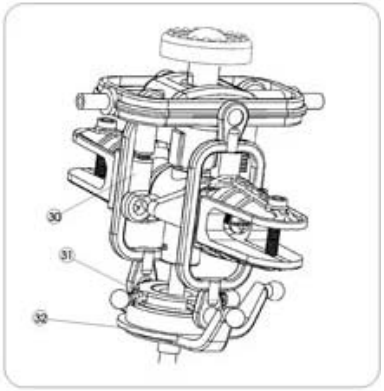

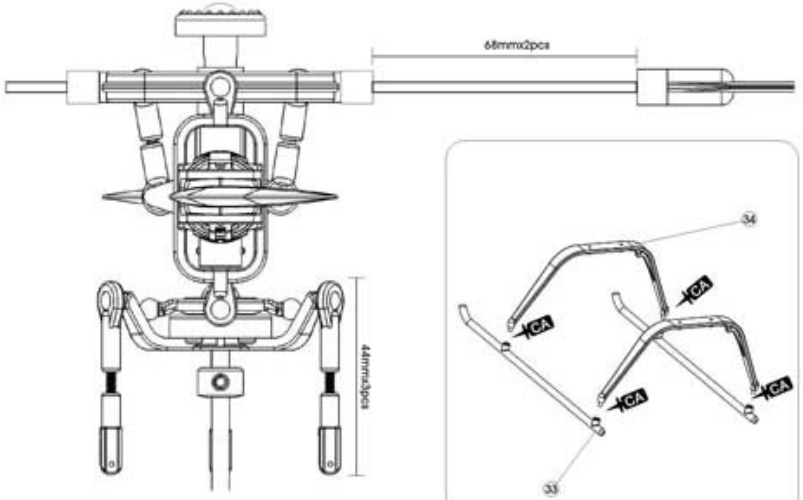

MAIN WHEEL GEAR & BATTERY INSTALLATION

NO.	PN	Part NO.	Part Name	Q'TY	Speciffication
35	3DM10	W-3DM1 -16	Stator main Wheel gear	1x1	Alnico
36	3DM10	W-3DM -22	Main shaft bearing	1x2	ϕ5xϕ6x2.5
37	3DM10	S-3DM1 -15	Main Wheel gear	1x1	
38	3DM10	W-3DM1 -13CN	Move copper wheel	1x1	Copper
39	3DM10	W-3DM1 -16CN	Tail tranemission gear	1x1	Copper
40	3DM19	W-3DM -35CN	Stator move Spread	1x2	M1.8x6.8

NO.	PN	Part NO.	Part Name	Q'TY	Speciffication
41	3DM11	W-3DM -30	Stator tail pole screw	1x1	M2.2x14.3
42	3DM13	W-3DM -29	Stator feet Shelf screw	1x6	M1.9x7.1
43	3DM13	W-3DM1 -11	Batteries stator	1x6	Stainless steel
44	3DM13	S-3DM1 -19	Plastics Batteries stator	1x2	
45	3DM14	S-3DM1 -18C	Batteries box	1x1	
46	3DM12	S-3DM1 -13A	Bottom cover of receiver	1x1	
47	3DM12	S-3DM1 -13B	Top cover of receiver	1x1	
48	3DM13	P-S-3DM1 -01	Fasten board	1x1	Carbon fiber

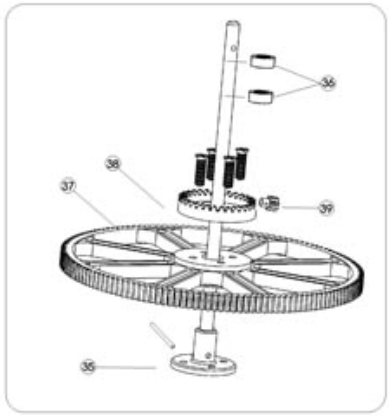

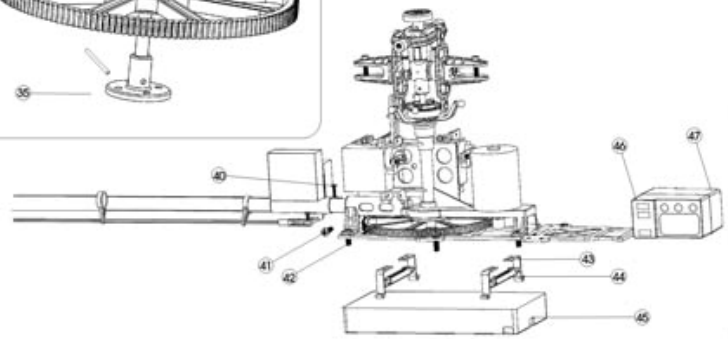

The different battery weight is different, canning pass to regulate the battery hook in front and back position to equilibrium fuselage of airplane

TAIL ROTOR INSTALLATION

NO.	PN	Part NO.	Part Name	Q'TY	Speciffication
49	3DM21	P-S-3DM -02	Tail shaft	1x1	Carbon fiber
50	3DM21	P-S-3DM -04CN	Tail move shaft	1x1	Carbon fiber
51	3DM21	P-S-3DM -03CN	Tail rotor turning shaft	1x1	Carbon fiber
52	3DM18	W-3DM -17CN	Tail rotor tie bar	1x1	Stainless steel
53	3DM18	S-3DM1 -28CN	Tail rotor clip	1x2	
54	3DM18	S-3DM1 -30CN	Tail rotor stator	1x1	
55	3DM18	S-3DM -29CN	Tail rotor bearing shelf	1x1	
56	3DM18	S-3DM1 -31CN	Tail Revolve shelf	1x1	
57	3DM18	S-3DM1 -32CN	Tail Revolve shelf clip	1x2	
58	3DM18	S-3DM1 -25CN	Tail Revolve wheel	1x1	
59	3DM18	S-3DM1 -23CN	Tail shelf A	1x1	

NO.	PN	Part NO.	Part Name	Q'TY	Speciffication
60	3DM18	S-3DM1 -24CN	Tail shelf B	1x1	
61	3DM18	S-3DM1 -27CN	Tail rotor	1x2	
62	3DM18	W-3DM -31CN	Stator tail rotor screw	1x2	M1.9x5.7
63	3DM18	W-3DM -34CN	Stator tail shelf screw	1x5	M1.2x5.8
64	3DM22	W-3DM -19CN	Tail rotor bolt	1x2	ϕ1.0x4.8
65	3DM22	W-3DM1 -22CN	transmission shaft bearing	1x1	ϕ2xϕ5x2.5
66	3DM22	S-3DM1 -25CN	Tail Revolve wheel	1x1	M1.4x5.6
67	3DM22	S-3DM1 -20	Motor tail rotor	1x1	
68	3DM22	W-3DM -24	Stator motor tail rotor screw	1x1	M1.4x5.6
69	3DM22	S-3DM1 -22	Tail motor wheel	1x1	
70	3DM22	S-3DM1 -21	Tail motor stabilizing blade	1x1	
71	3DM22	W-3DM -24	Stator tail equilibrium motor screw	1x1	M1.4x5.6
72	3DM22	W-3DM -22	motor Tail rotor bearing	1x1	ϕ3xϕ6x2.5
73	3DM22	W-3DM -22	motor Tail rotor bearing	1x1	ϕ4xϕ7x2.5

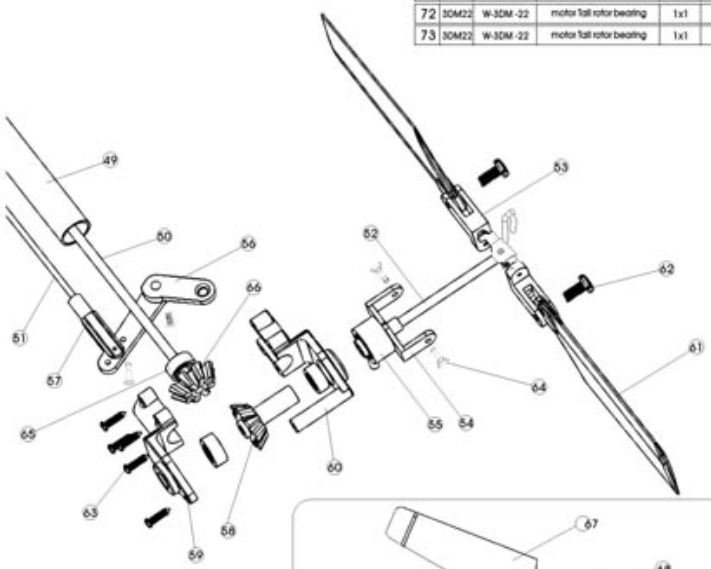

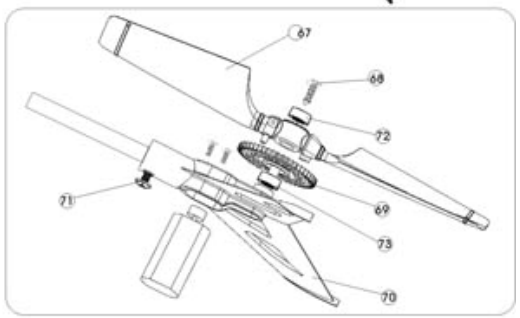

EXPLODE DIAGRAM(3DSM-01)

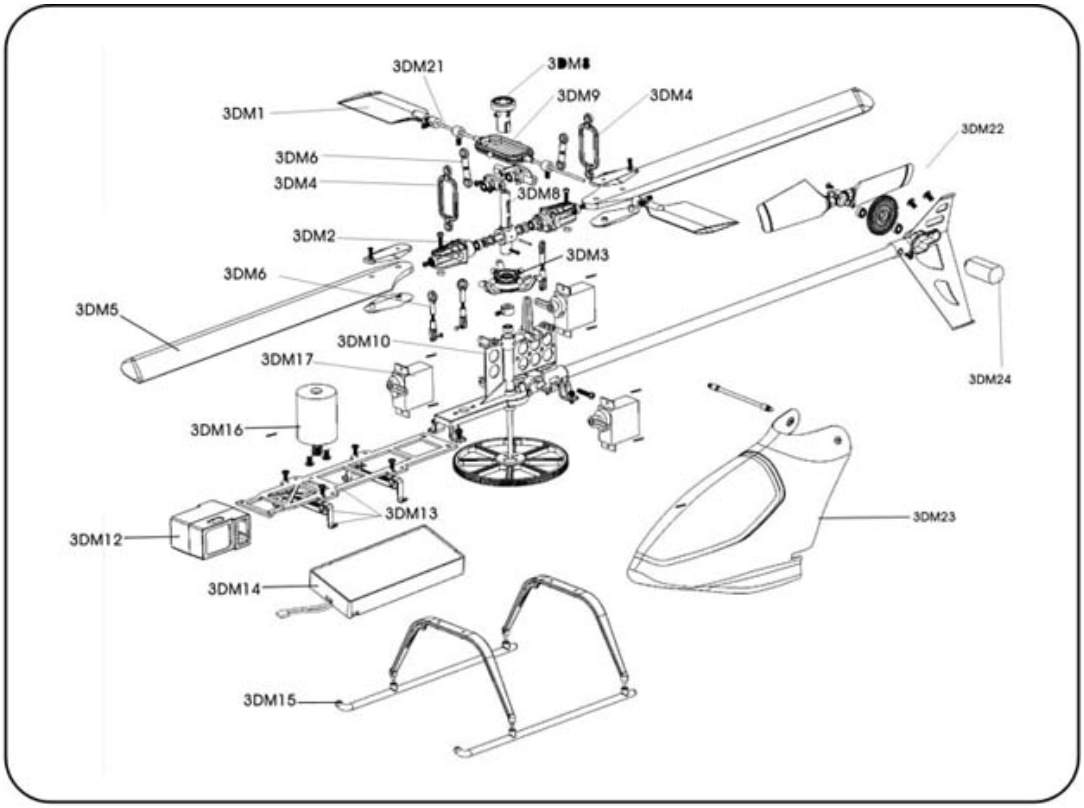

EXPLODE DIAGRAM(3DSM-02)

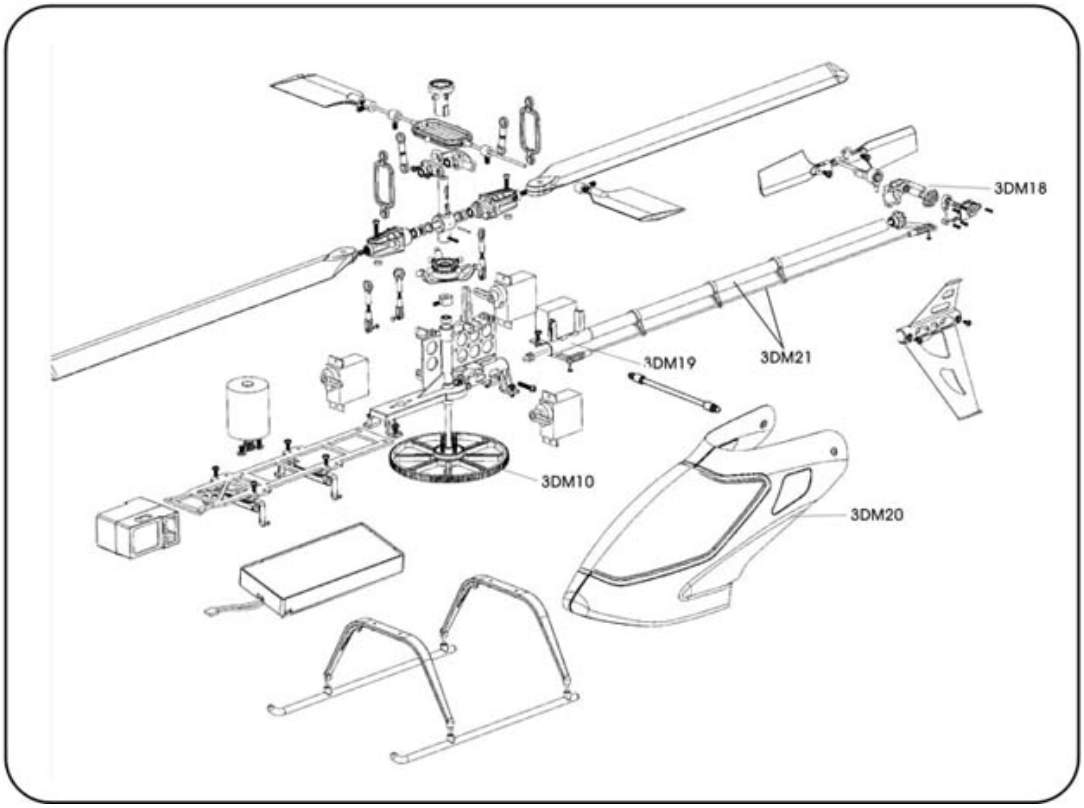

PRE-FLIGHT CHECKLIST

This model helicopter is an electronically controlled mechanical device traveling at high speeds and attitudes,with high-speed rotating blades posing a potential dangerous risk.Please make it a habit to always perform a pre-flight check of the entire model prior to each flight.If you discover any broken,loose,or worn parts,do not fly the model.Repair or replace items immediately.After each flight,completely clean the model and check for damage or wear.Following these simple steps will provide for maximum enjoyment owning and operating the CLC Helicopter.

Flying control motion of tilt left

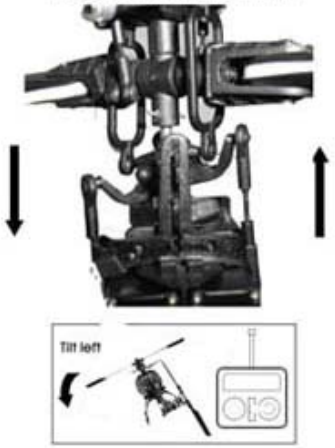

Flying control motion of tilt right

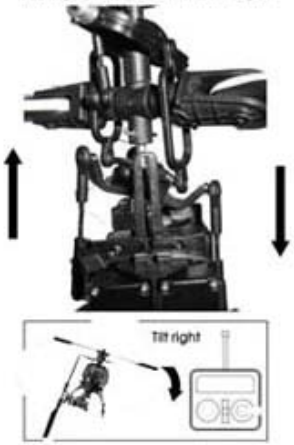

Flying control motion of forward

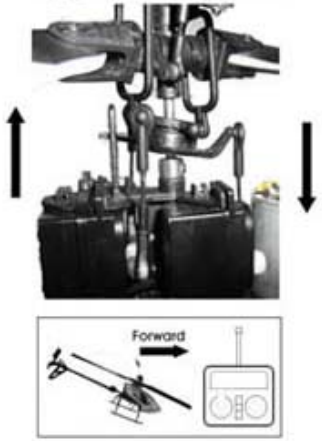

Flying control motion of backward

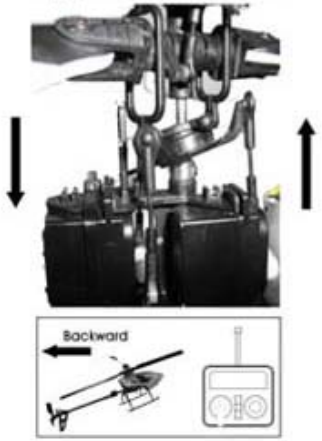

PRE-FLIGHT CHECKLIST

Flying control motion of ascending

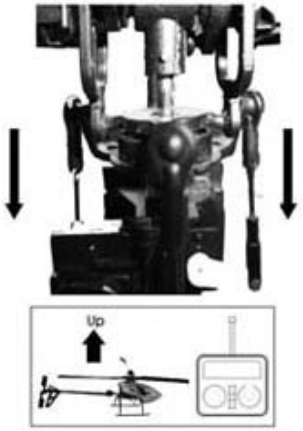

Flying control motion of descending

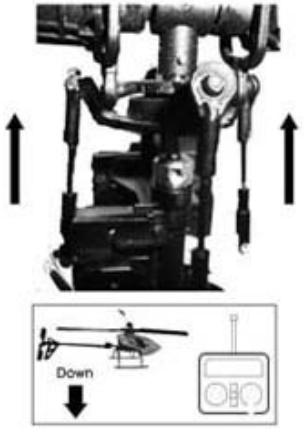

Flying control motion of left turn

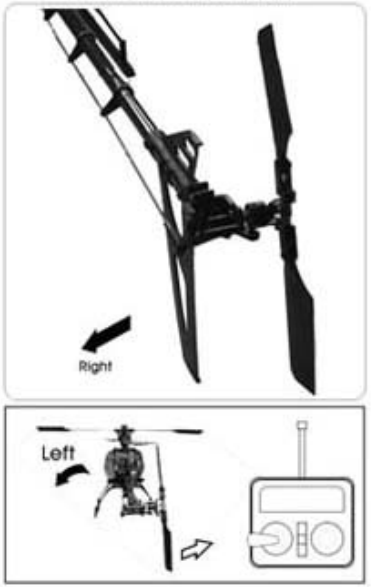

Flying control motion of right turn

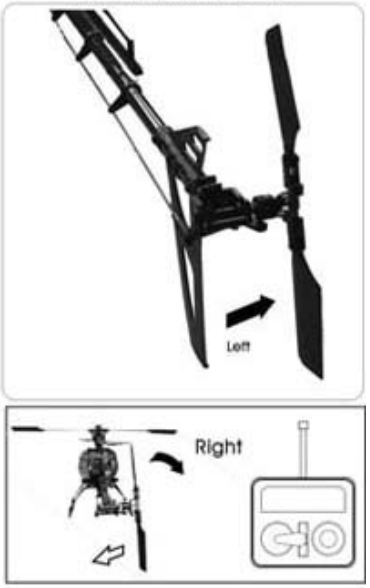

NAME AND HANDLING OF EACH PART

TRANSMITTER T6VF（FRONT PANEL）

Level meter

Displays the transmitter battery voltage.When the needle detects to the boundary between the silver and red zones,recharge or replace the battery.

Trainer switch

Operates the instructor transmitter when using the trainer function.The student transmitter can be operated only while this switching is being pressed.

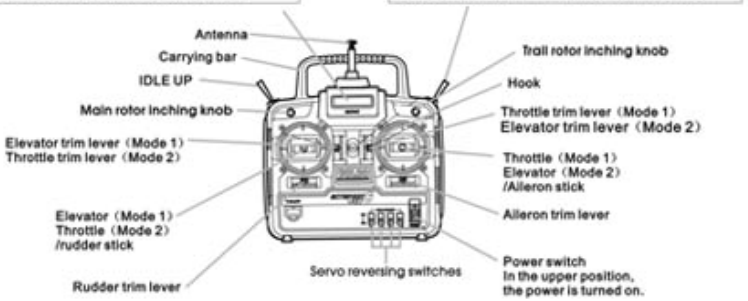

	Channel display	Operating direction display
Switches that reverse the direction of operation of the servos.The lower position is the normal side and the upper position is the reverse side.	AIL:Aileron（CH1）ELE:Elevator（CH2） THR:Throttle（CH3）RUD: Rudder（CH4）	REV:Reverse side NOR:Normal side

TRAINSMITTER T6VF（REAR PANEL）

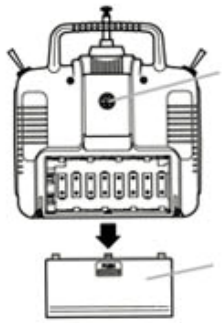

Trainer jack

Connects the trainer cord when using the trainer function.
（The trainer cord is sold separately.）

Battery cover

Use when replacing the battery.Slide the cover downward while pressing the part marked "PUSH".

TRAINSMITTER T6VF（SIDE PANEL）

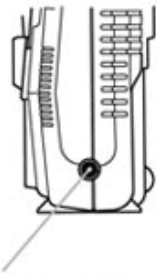

Charging jack

Charging jack when the transmitter was converted to nicad battery system.

CONNECTION OF THE MIXING CONTROLLER

CONNECTION OF TAIL MOTOR,MAIN MOTOR AND BATTERY

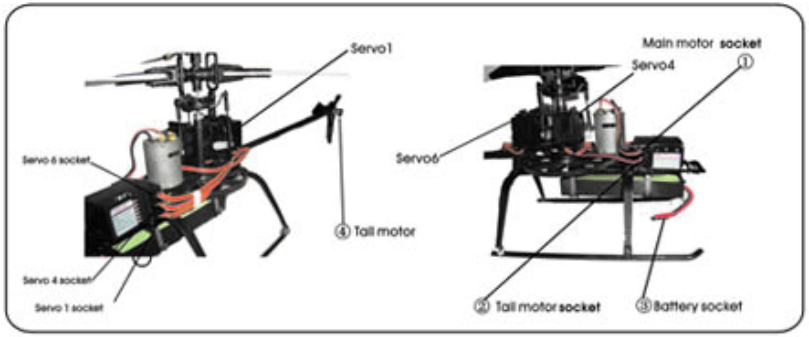

1,Plug the ① Main motor socket into M1 ⑦ as following picture.
2,Plug the ② Tail motor socket into M2 ⑥ as following picture.
3,Connect ③ battery socket into ⑧ as following picture.

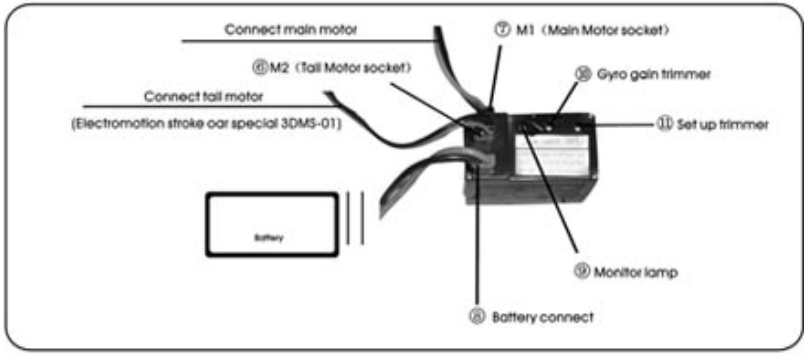

Special for Collective Cyclic Pitch Control System
（for 3DSM-01,3DSM-02）

Our CCPM（collective lyclic pitch mixing）transmitter is especially designed for flying the CP 3D helicopter.The throttle stick controls both the motor speed and the pitch servos.And,the invert switch will reverse the controls so that you can fly the machine upside down as though it were right side up.

CONNECTION OF THE MIXING CONTROLLER

1.Plug the ① servo 1 into **Ch1** as following picture.

2.Plug the ② Servo④ into **Ch4** as following picture.

3.Plug the ③ Servo⑥ into **Ch6** as following picture.

(Electromotion stroke oar special 3DMS-01)

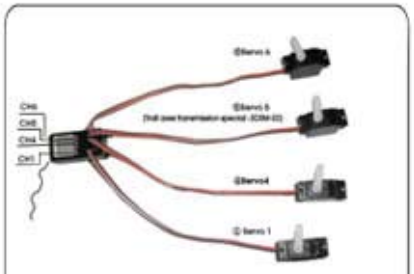

(Trail axes transmission special 3DSM-02)

Note:
The battery, main motor and tail motor connect method for 3DSM-01/3DSM-02 same as the above **Page 13.**

CLC RECEIVER WIRING (attachment choice equipment)

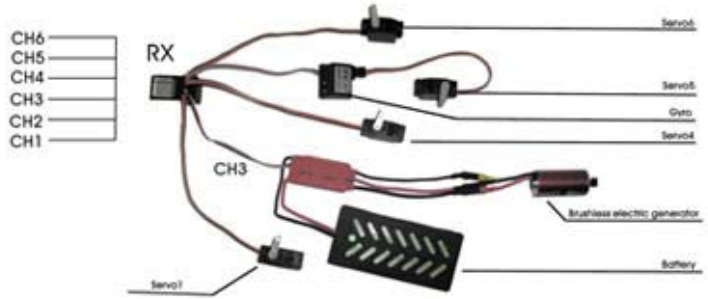

The additional equipments of helicopter can be choosen by the users according their needs.

OPERATION AND ADJUSTMENT

1) Re-check the installation and connection, especially pay attention to the polarities. If the polarity of a motor is connected reversely, the motor will turn in the opposite direction, which is not serious because you can change the polarities. Nevertheless, if the polarity of the Controller is reversed, it may burn out the Controller. Be careful!

2) Firstly, set the throttle stick and its trimmer on your transmitter to the lowest position. And please be noted that the servo reverse switches must be set to the normal position. Beat the IDLE UP to normal position again. Only in this condition can you turn on your transmitter. If you hear the B-B alarm voice, please check wheather the volotage of the Transmitter battery is normal or check the IDLE UP switch whether be setted in the normal position.

3) After the transmitter is turned on, you can connect the battery to the Controller.

4) Don't move or sway the machine. Wait for the Controller to calibrate for itself. The LED will firstly blink for 3-5 times. You have to wait until the lamp lights green before flying.

5) Observe if the tail rotor blades rotate in proper proportion to the main rotor blades. That is, to observe if the thrust of the tail rotor blades can counter the torque of the main rotor blades. If not, disconnect the battery and adjust the Set up trimmer (P13 ⑪) to increase (+) or decrease (-) the r.p.m. of the tail rotor blades. Plug in the battery and try again until the tail rotor blades can Rotate in proper proportion to the main rotor blades and the model will not turn to left or right on the ground.

6) Then, fly the helicopter in different directions to test the effectiveness of the gyro. You can adjust the GAIN Trimmer (P13⑨) to increase (+) or decrease (-) the gyro gain. For beginners, it is desired to increase the gyro gain hence the effectiveness of the tail so that the helicopter will be more directionally stable. But for a pro or an expert pilot, it is desired to decrease the gyro gain in order to make the helicopter more responsive to control.

7) Before adjust the GAIN Trimmer (P13 ⑨) and/or the Set up trimmer (P13⑪) , you must disconnect the battery from the Controller.

8) The Control-box can be only used on helicopters. It is not designed for other type of model airplanes.

9) Should the helicopter crash, immediately set the throttle stick and its trimmer to the lowest position and disconnect the battery first and then turn off your transmitter to avoid damage of the helicopter and/or the Controller.

10) The stabilizing blade beam must be fasten with conjunction of the stabilizing blade, the conjunction screw must be glued on some CA and tightened in the beam on the proper station. This process is to avoid the danger the blade would fly seperate away when it rotate in high speed.

11) The battery adpter must be the same voltage with local power supplier.

CHARGING THE BATTERY PACK

Charging battery should be a partial procedure in your flight. It is recommended that you completely discharge the battery during the initial test flight before following the charging guidelines outlined below .

Ni-Mh battery charging

The include AC charger will charge a fully discharged 9.6V 700mAh Ni-Mh Battery (3DM14), to ensure your battery is near fully discharged before charging, when your helicopter should slowly descend by itself or not be able to take off, you have to recharge the battery.

Note: Do not leave the charger and battery unattended during the charging process. While charging, place the battery on a heat resistant surface and constantly monitor the temperature of the battery pack. If the battery becomes hot any time during the charge process, discontinue charging immediately. A fully discharged battery left to charge about 2 hours around. And when the battery gets warm, it will indict fully charged. Or it will be damaged due to over charging. A partially discharged battery not removed from the charger when the battery becomes warm may also be damaged due to over charging. Do not allow children to charge battery packs without adult supervision.

OPERATION AND ADJUSTMENT

About Lithium Polymer Battery

Using CLC's Lithium Polymer battery to fly your lovely helicopter is your best choice. The Li-Po battery will improve flight performance and flight time, at similar or even less weight than Ni-Mh battery. Anyhow, with 3-cell 11.1V 1400mAh Li-Po battery (UP-001), your helicopter will do the best aerobatic performance. But one thing that Li-Po batteries are significantly more volatile than the alkaline, Ni-Cd or Ni-Mh batteries used in RC applications. So you should be careful when you use Li-Po battery.

Note: When charging Li-Po batteries (3-Cell, 11.1v), charging current should never exceed 0.5A and charging voltage should never exceed 12.6V, and when you charge your Li-Po battery, please notice the description in the paster which was stuck in the front of the Li-Po charger (UP-007), when the light comes to red flash, it has power; when it appear red, it has been charged completely; when it display red and green, it is charging; and when it comes to red and green flash, it should be charged error.

MAIN ROTOR ADJUSTMENTS

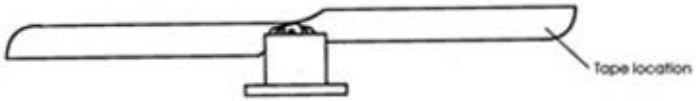

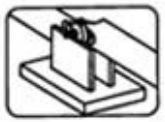

★ Before flying,balancing of the blades is very important.
Screw the rotor blades together as illustration.The rotor blades are properly balanced,when they are suspended exactly horizontally.If not,the blades are not in equilibrium.
This is corrected by applying tape to lighter blade.

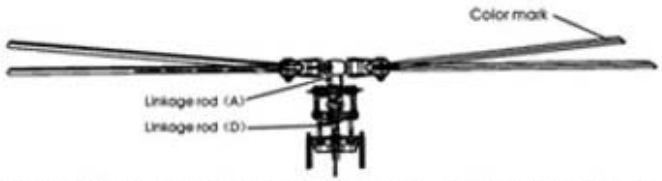

※ Linkage rod (A):Regular pitch trim (For large variations). ※ Linkage rod (D):Slight pitch trim (For large variations).

★ Apply a red piece of tape on one blade,or paint a red stripe with a marker or paint to identify one blade.

★ Run the helicopter at a safe distance and have someone look at the spinning blades at the reference angle shown in the photo.If the blade tracking is not set correctly,you will be able to identify the blade with the red identifying mark rotating higher or lower than the other blade.Adjust the linkage rod length shorter or longer to make both blades track level.

REGULAR MAINTENANCE

Regular maintenance is required to keep the Lynx-360XL helicopter in optimal and safe flying condition.The model requires precise configuration of the components and settings to be kept by the owner.Maintain regular maintenance on the model to avoid accidents or loss,and optimum performance.

MAIN ROTOR CHECKLIST

1.Main Rotor Housing:When the main rotor housing is worn or faulty,there will be obvious vibration and poor flight control.Check the main rotor,main shaft,and feathering shaft for wear or deformity.Replace parts as necessary to eliminate imbalance.

2.O-Rings:The O-Rings will lose their elasticity over time.This will cause excess play on rotor and cause instability.Replace as needed.

3.Main Rotor Holder:When the heli will not fly or reacts sluggishly,even after checking for proper setting of pitch and throttle,check the following items:

- Plastic Parts
- Bearings
- Ball bearings
- Rotor Blades

4.Check for excess play or gaps between the surfaces,missing or broken parts,or binding or restricted movement.It is important to check for main rotor balance before each flight.Operating the model when out of balance will cause excessive wear and premature failure of parts,possibly resulting in a dangerous situation.

5.Control Arm Assembly:Check regularly for cracked,worn,bent or binding controll arms and push rods.Smooth movement of control arms and linkages is required for stable,vibration free flight.

Swashplate:Check for excess slop in the main ball where the main shaft rides on,and slop or looseness between the plastic and metal surfaces.Swashplate wear will result in poor stability and lack of control during flight.Replace as necessary.

FUSELAGE/CHASSIS

1.Main Shaft Bearing:Normal replacement interval for proper operation is between 60-100flights.If flying 3D or extreme aerobatics often,inspect the bearing frequently and shorten the interval as necessary.

2.One Way Bearing:One way bearings have longer lifetimes.Failure is not common.To keep the one-way bearing in good operation,remove it to clean and lubricate after every 50 flights.If the main drive gear is loose,you should replace the one-way bearing.

3.Drive Belt:CLC uses only top quality,stretch-proof belts.It is however,impossible to prevent the belt from stretching or wearing out.Check belt tension regularly,and check for the wear on the teeth.Replace as necessary.

LINKAGE RODS & CONNECTING PARTS

During assembly,take special care to keep the connecting parts in smooth operation,and avoid excess play or binding.Failure to do so will result in poor flihgt stability.The linkage rods and ends will break and wear due to normal usage,crashing,and poor maintenance and environment.Check for wear and proper operation regularly,replace as needed.

TAIL ROTOR SYSTEM

1.Tail Rotor Control Set:Check the tail rotor bearing regularly.If there is excess play or gaps replace immdeiately.Avoid any binding or improper contact on the tail components and bearings as this will cause excess wear and heat potentially melting or deforming the tail system.

2.Tail Unit Assembly:Avoid flying in tall grass or weeds.If grass or weed becomes lodged in the tail rotor unit,it will interfere with the operation,and cause the helicopter to lose control.Always check for foreign objects in the tail and clean them off immediately.Avoid using lubricants on the exposed surfaces of the model as it will attrack and collect dirt and debris,and cause failure.

3.Tail Rotor Housing:Disassemble Tail rotor housing for cleaning and maintenance afetr every 50 flights.If the tail does not operate smoothly or shows any signs of stress or wear,please replace immediately.

4.Tail Rotor:Check the Tail Rotor blades regularly for damage,especially if the helicopter ever strikes the ground while flying,or after hard landings.Damaged Tail Rotor blades can induce vibration.

NOTICE:Maintain regular maintenance on the model to avoid accidents or loss.

MAIN SPARE PARTS

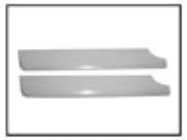
S-3DM1-37
Glass fiber rotor

3DM16
Main motor

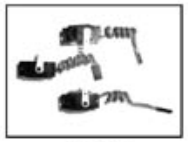
3DM17
Servox3pcs

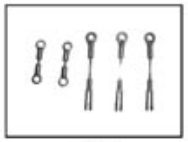
3DM6
Servo linkage set

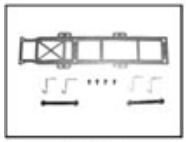
3DM13
Fasten base

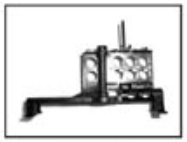
3DM11
Main frame set

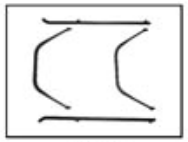
3DM15
Feet shelf set

S-3DM1-20
Tail rotor

S-3DM1-16B
Feet shelf holder

3DM10
Main drive gear

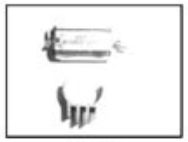
3DM24
Tail rotor motor set

S-3DM1-09
Main rotor holder set

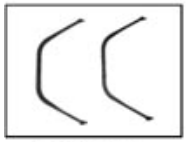
S-3DM1-16A
Feet shelf

S-3DM1-21
Tail motor stabilizing blade

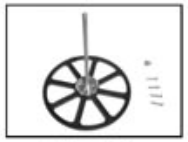
3DM10-CN
Main drive gear set

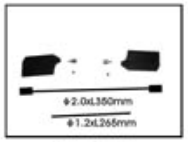

3DM1-CN
Vice rotor set

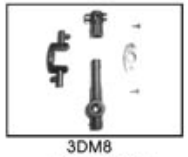
3DM8
Control module

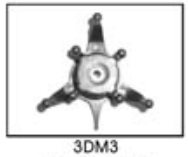
3DM3
Incline panel set

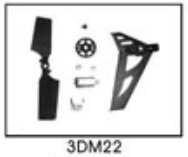
3DM22
Tail rotor set

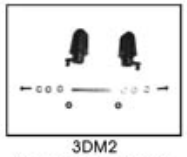
3DM2
Main rotor holder clip set

MAIN SPARE PARTS

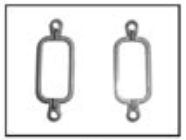
3DM4
Control dish links

3DM5
Pastics main rotor

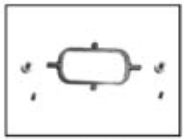
3DM9
Control dish links set

3DM1
Tail shaft

3DM14
Li-Mh battery
(9.6V 700mAh)

3DM18-CN
Tail rotor set

W-3DM20
Bearing (10x15x4)

W-3DM22
Bearing set (3x6x2.5)

3DM25-CN
Gyro

3DM12
Receiver

3DM26
Charger

3DMI-CN
Tail shaft

UPGRADE PARTS

UP-001
Lithium polymer battery
(11.1V 1400mAh)

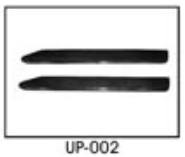
UP-002
Carbon fiber rotor

UP-003
Brushless electric generator

UP-004
Actiyator

UP-005
Metal box

UP-006
Wood rotor

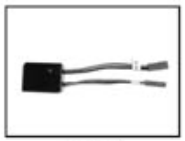
UP-007
Charger fittings

UP-008
Target gyro

Warning:
Changes or modifications to this unit not expressly approved by the party responsible for compliance will void the user's authority to operate the equipment. Any change to the equipment will void FCC grant.

This equipment has been tested and found to comply with the limits for a Class B digital device, pursuant to part 15 of the FCC Rules. These limits are designed to provide reasonable protection against harmful interference in a residential installation. This equipment generates, uses and can radiate radio frequency energy and, if not installed and used in accordance with the instructions, may cause harmful interference to radio communications. However, there is no guarantee that interference will not occur in a particular installation. If this equipment does cause harmful interference to radio or television reception, which can be determined by turning the equipment off and on, the user is encouraged to try to correct the interference by one or more of the following measures:
--Reorient or relocate the receiving antenna.
--Increase the separation between the equipment and receiver.
--Connect the equipment into an outlet on a circuit different from that to which the receiver is connected.
--Consult the dealer or an experienced radio/TV technician for help.
This device complies with Part 15 of the FCC Rules. Operation is subject to the following two conditions: (1) this device may not cause harmful interference, and (2) this device must accept any interference received, including interference that may cause undesired operation.