FLASH

TONE & FLASH

TONE

ON & OFF

BATTERY REPLACEMENT

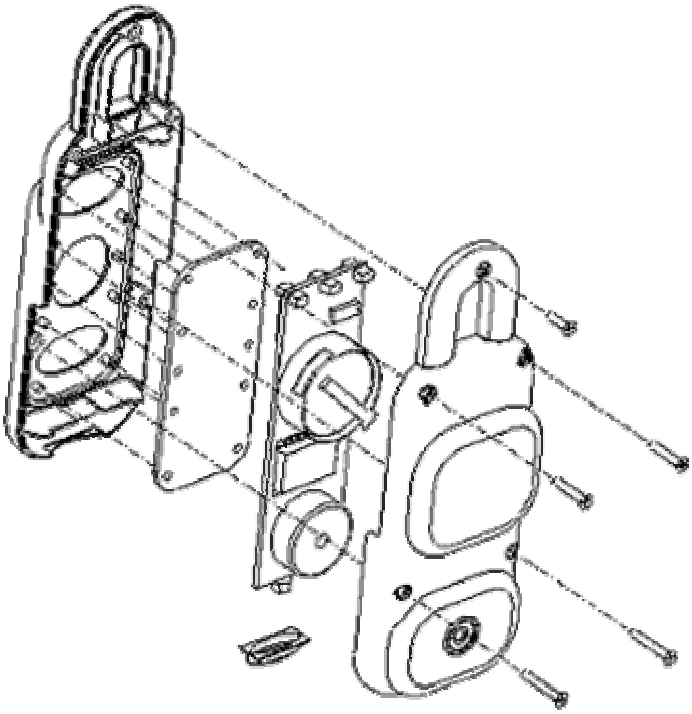

BATTERY REPLACEMENT

1. REMOVE SCREWS
2. SEPARATE HOUSINGS
3. LOCATE COIN CELL BATTERY
4. LIFT BATTERY TAB TO EJECT BATTERY
5. REPLACE BATTERY
6. REPLACE HOUSING
7. REPLACE SCREWS

WWW.TRAILBEACON.COM

Application and Specification of Trail Beacon

Application:
Trail Beacon is the premier tool for today's outdoorsman. The Trail Beacon allows the user to mark their trail with the Trail Beacon. The Trail Beacon emits a light and tone for the user to follow to find their way home. The Trail Beacon also can be used for search and rescue. The Beacons use a preprogrammed frequency that can be followed by search and rescue teams to locate the user in the case of emergencies. This compact device is great for hiking, cross country skiing, cross country, search and rescue, and many more outdoors applications.

Specifications:
Radio frequency: 915MHz
Effective range: 60 meters
Power requirement: CR2032 lithium coin battery (3V, 220mAh)
Output power: 30mW (average)
60mW (maximum)
180uW (standby mode)
Operating temperature (℃): -20 ~ +60

THIS DEVICE COMPLIES WITH PART 15 OF THE FCC RULES. OPERATION IS SUBJECT TO THE FOLLOWING TWO CONDITIONS: (1) THIS DEVICE MAY NOT CAUSE HARMFUL INTERFERENCE AND (2) THIS DEVICE MUST ACCEPT ANY INTERFERENCE RECEIVED, INCLUDING INTERFERENCE THAT MAY CAUSE UNDESIRED OPERATION.

Notice : The changes or modifications not expressly approved by the party responsible for compliance could void the user' s authority to operate the equipment.

IMPORTANT NOTE: To comply with the FCC RF exposure compliance requirements, no change to the antenna or the device is permitted. Any change to the antenna or the device could result in the device exceeding the RF exposure requirements and void user' s authority to operate the device.