WAX210
Antenna DVT Test Report

Customer	Netgear
Project	WAX210
Project Description	Dualband antenna *2
Date	2024/06/18
Prepared by	Daniel
Checked	Tony
Report Version	A04

Address: No. 500&520, Fusing 3rd Rd., Hwa-Ya Technology Park Kuei-Shan Dist., Taoyuan City 33383,

Executive Summary

- **Agenda**
  - Antenna Development Resource
  - Antenna Testing Set Up
  - Placement and Specification
  - S11 & Isolation
  - Radiation Pattern
  - Efficiency and Gain

Antenna Development Resource

3D Anechoic Chamber - BWANT

- Size: 7.32M(L)x3.66M(W)X3.66M(H)
- Testing range from 400MHz to 7GHz
- Chamber Isolation : 10KHz to 10GHz >100dB (NSA 94-106)
- Calibration antenna : BWANT SD650 /SD740 /SD900 /SD1150 /SD1575 /SD1800 /SD2140 /SD2450 /SD3200 /SD3600 /SD4550 /SD5400 /HA-0508
- Calibration date: 2022/10/27
- Test software : BWANT 3D Passive

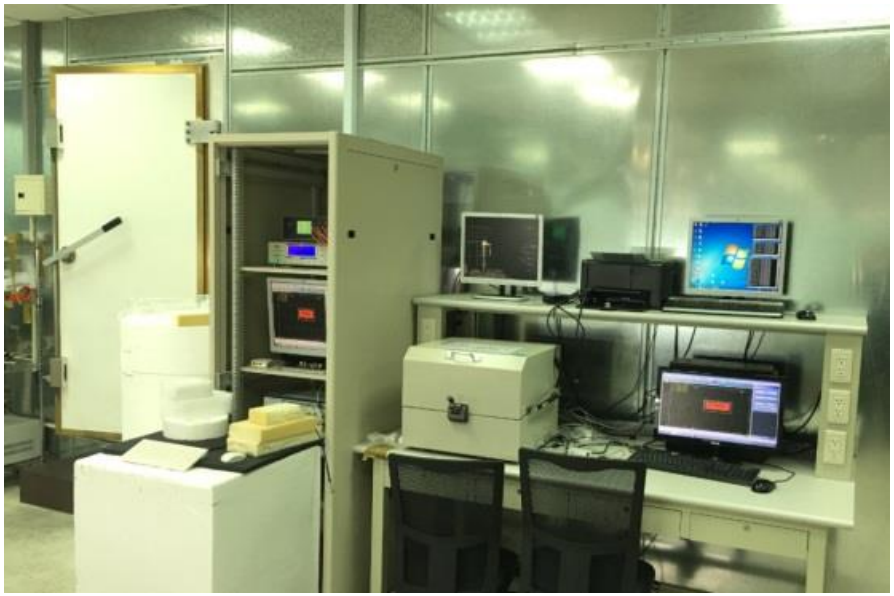

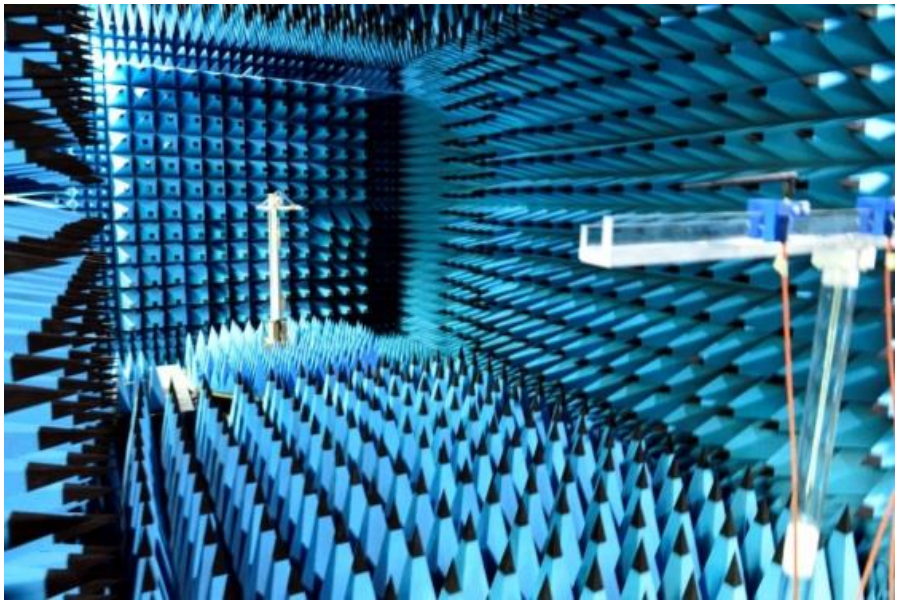

3D Anechoic Chamber

DUT Setup

- The DUT is set up on the test fixture and the antenna is connected to the test cable to measure the antenna performance.

Test Degree			
Theta		Phi	
START	0	START	0
END	165	END	345
INCREMENT	15	INCREMENT	15

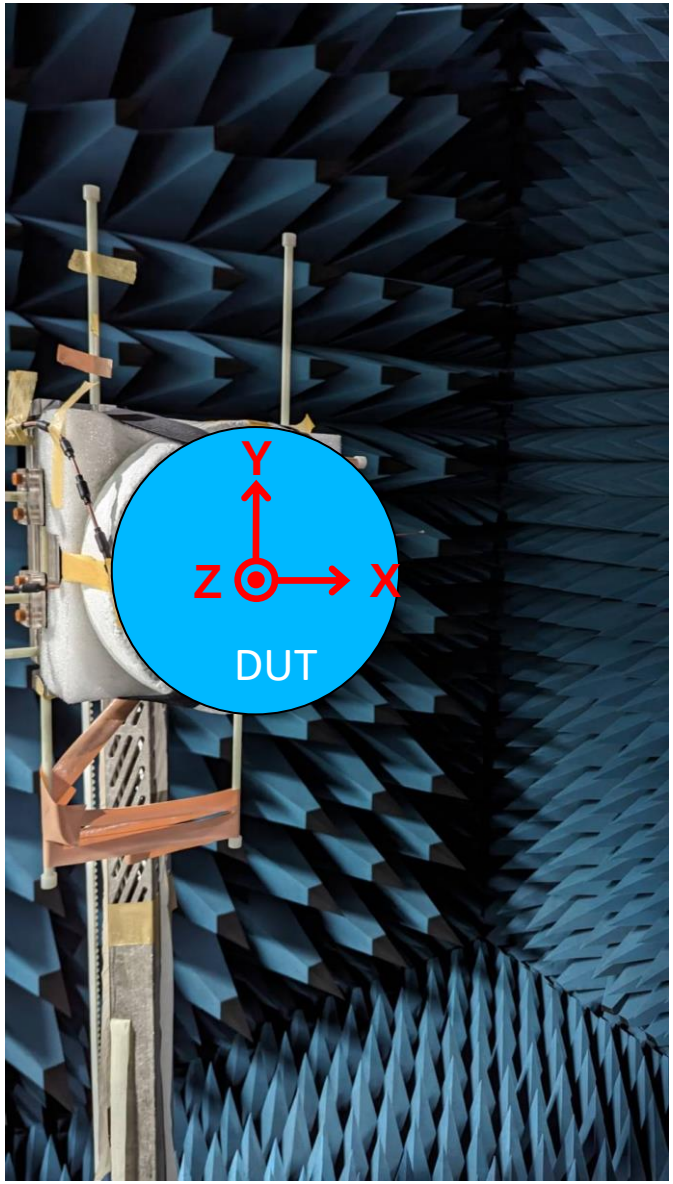

Placement and specification

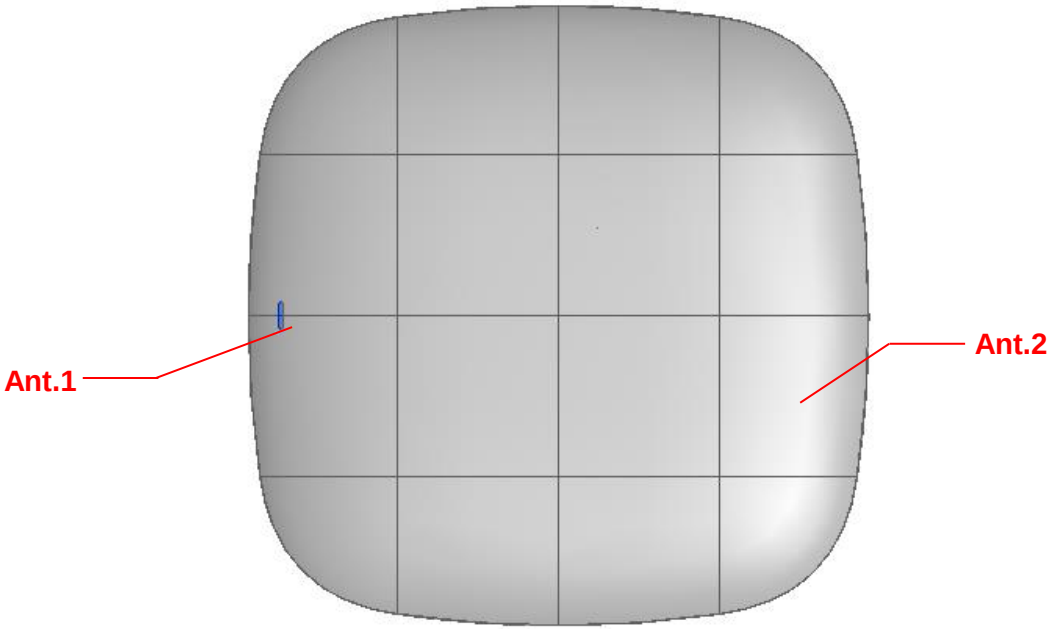

Ant No.	Senao PN (Vender PN)	Operating Band	Gain (dBi)	Efficiency (%)	Ant type	Material	Feeding	Dimension
Ant.1	7102A1229000 (98-019141-00)	2400MHz ~ 2500 MHz	2.7~3.1	63~68	PIFA	FR4	Cable	30*13*0.8mm
		5150MHz ~ 5900 MHz	3.4~4.2	63~68				
Ant.2	7102A1230000 (98-019141-01)	2400MHz ~ 2500 MHz	3.3~4.1	61~64	Monopole	FR4	Cable	29*13*0.8mm
		5150MHz ~ 5900 MHz	3.3~4.6	60~66				

S-Parameter

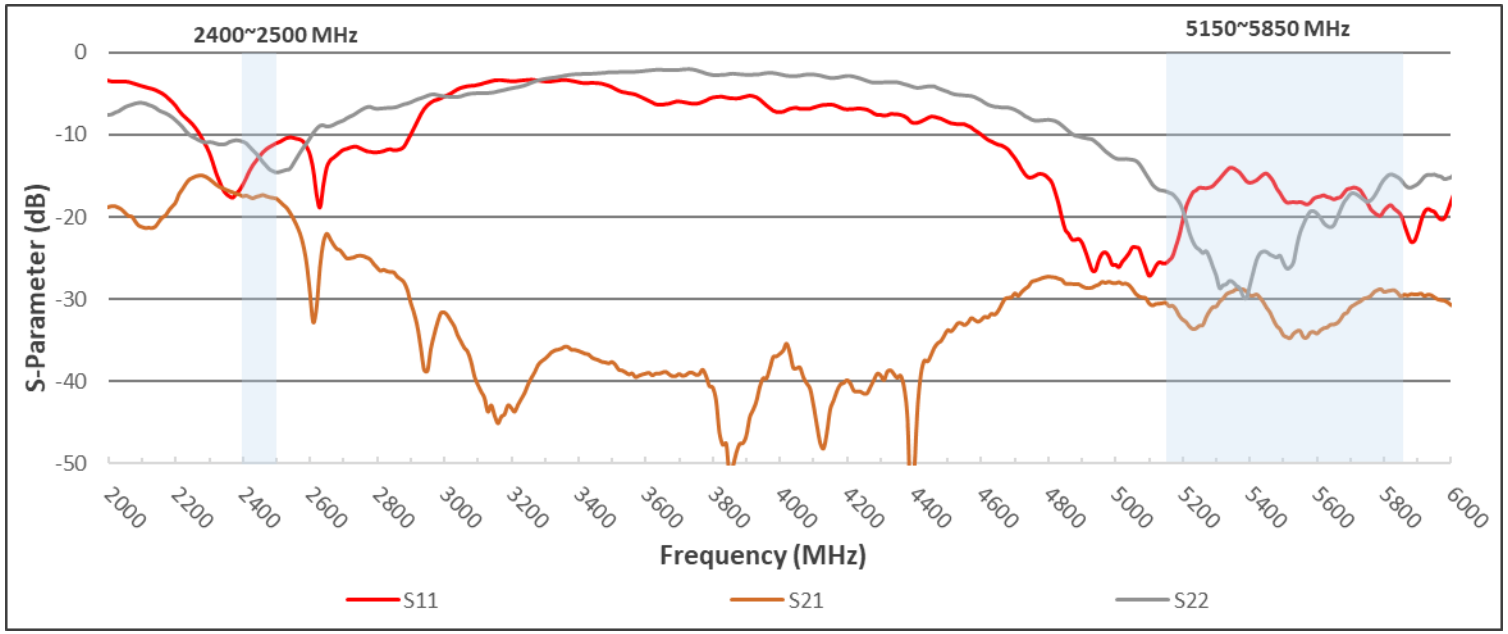

Freq. (MHz)	S11	S22	S21
2400	-16.05	-10.80	-17.44
2450	-12.57	-12.75	-17.40
2500	-10.99	-14.54	-17.72
5150	-25.58	-16.83	-30.41
5550	-17.75	-25.55	-34.37
5850	-19.73	-15.43	-29.64
5900	-21.90	-15.96	-29.40

2D Radiation Pattern – Ant.1 @ 2GHz

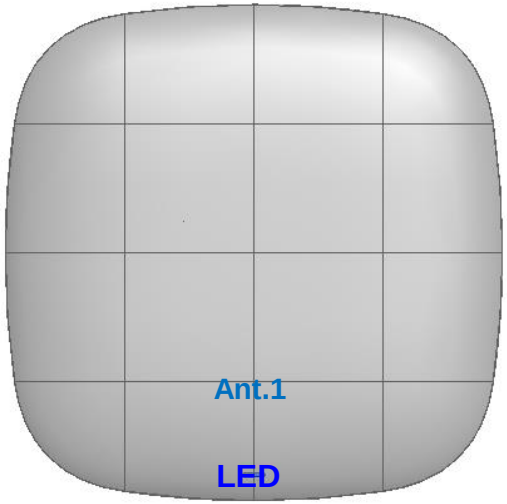

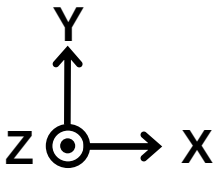

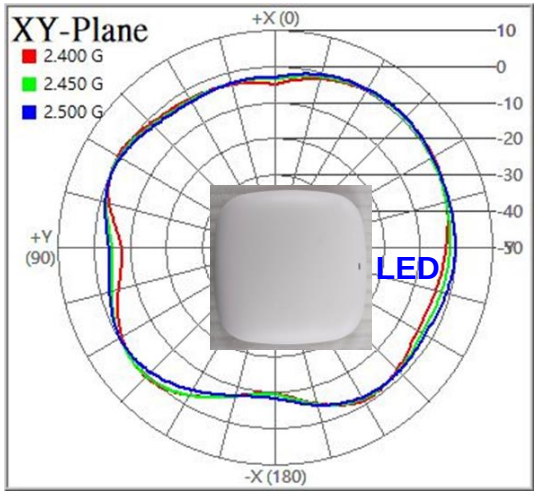

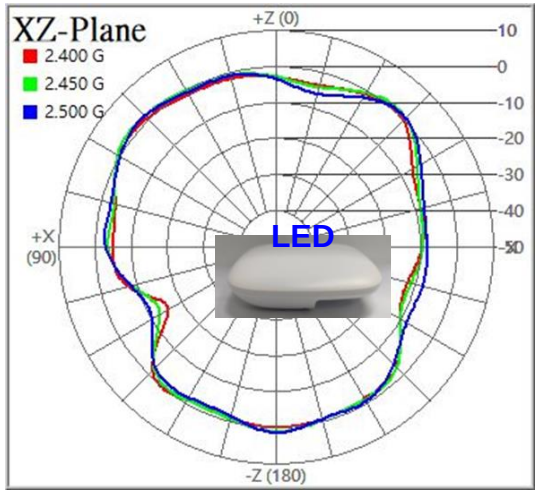

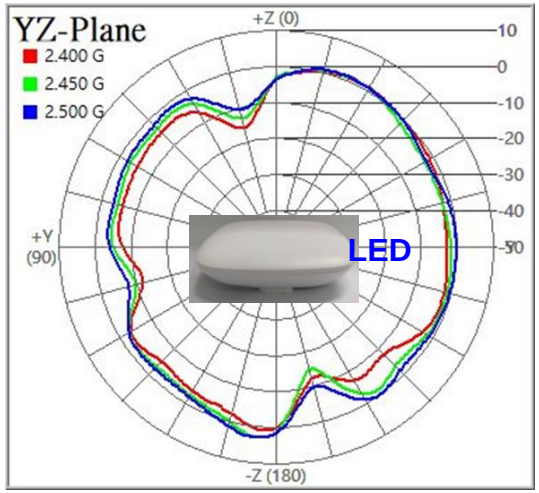

2D Radiation Pattern – Ant.1 @ 5GHz

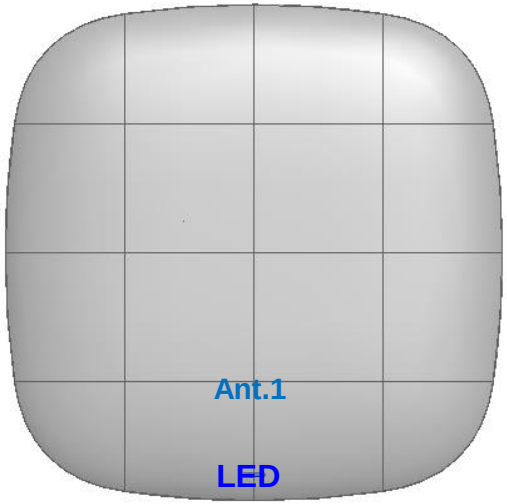

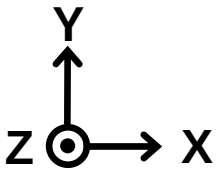

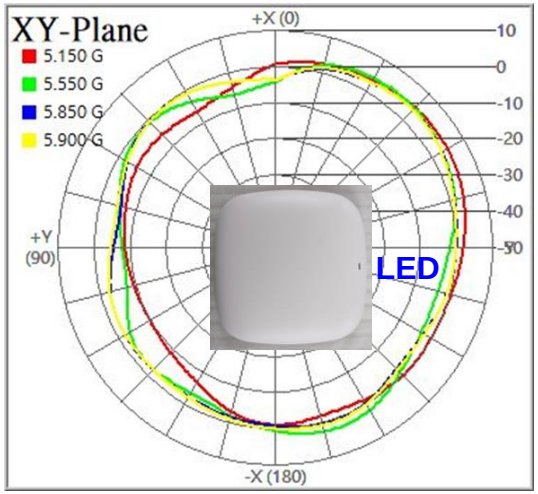

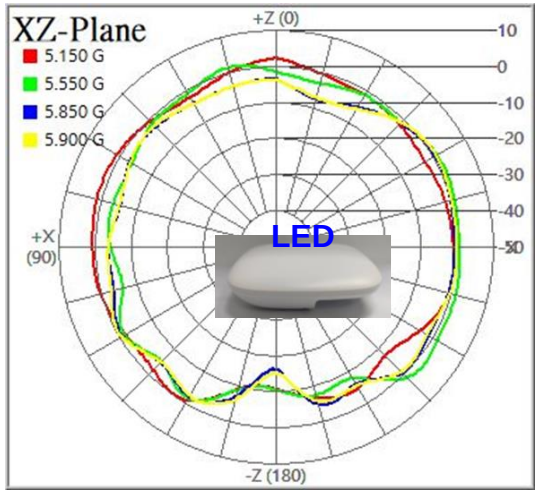

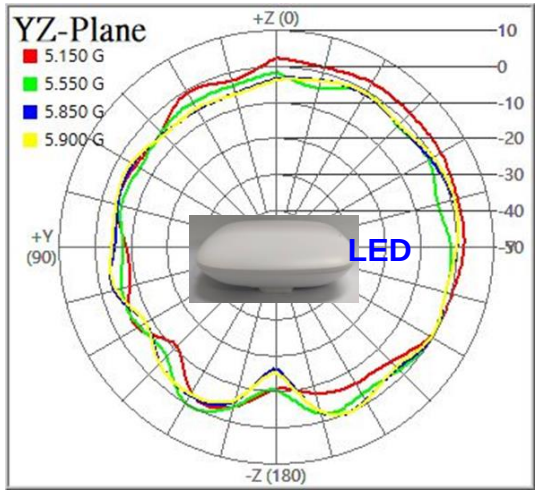

2D Radiation Pattern – Ant.2 @ 2GHz

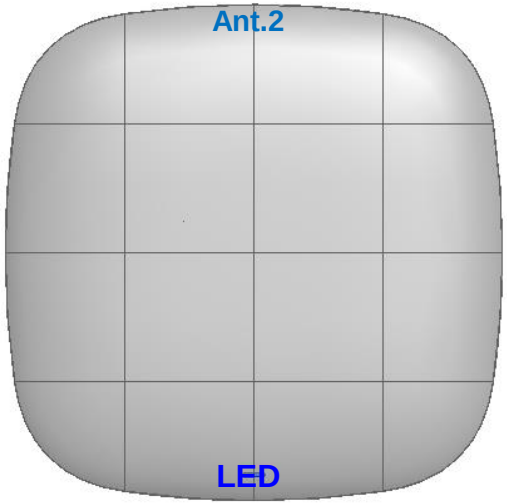

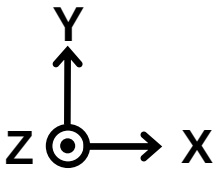

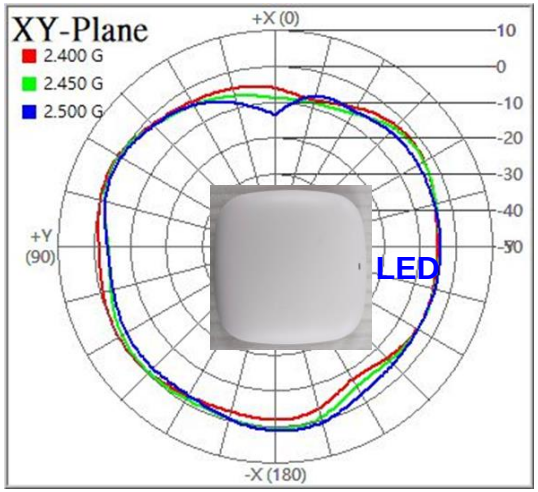

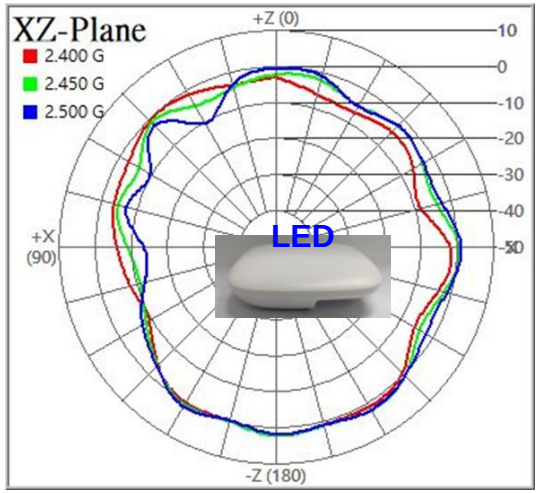

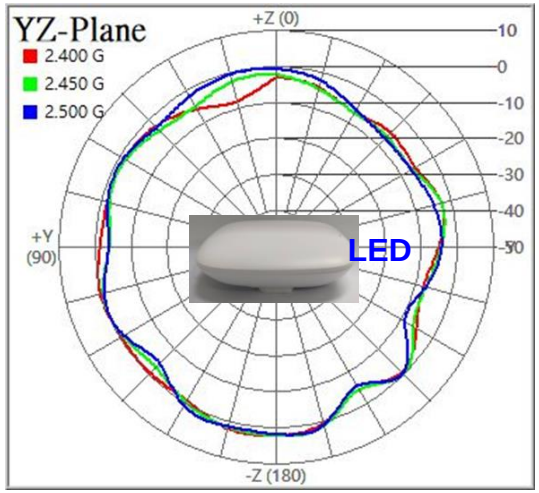

2D Radiation Pattern – Ant.2 @ 5GHz

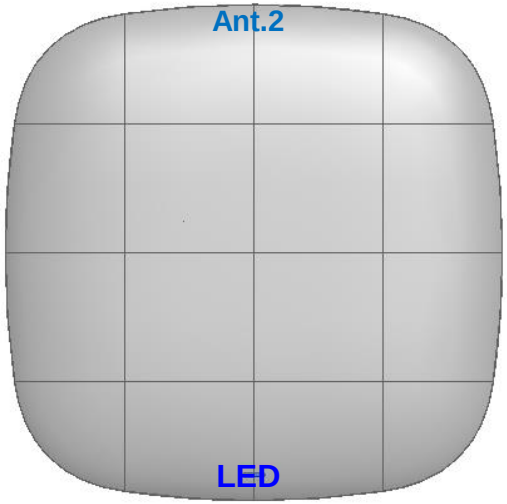

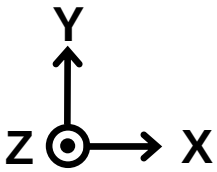

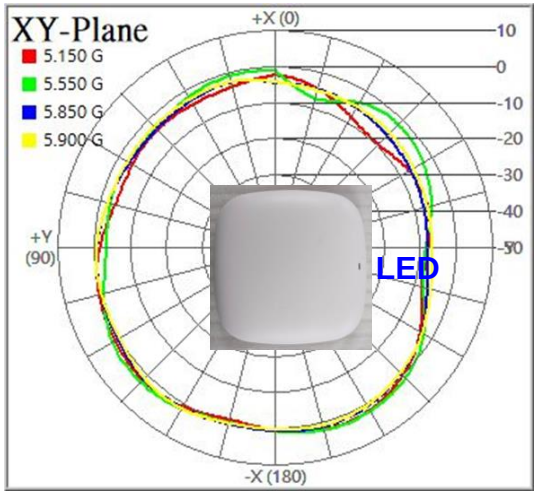

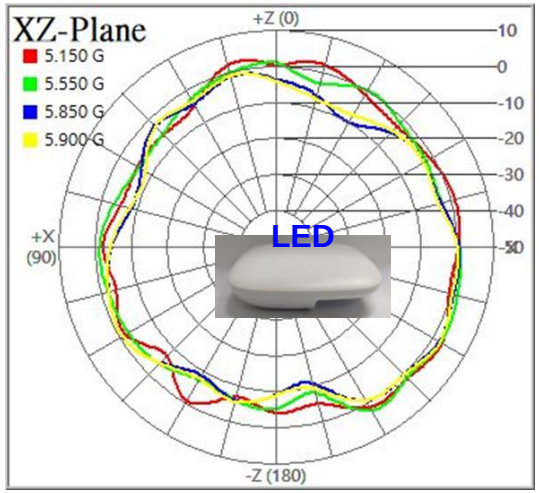

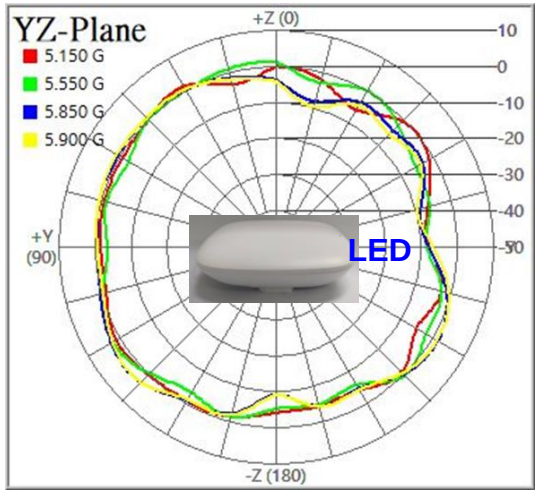

Combine pattern – @ 2GHz

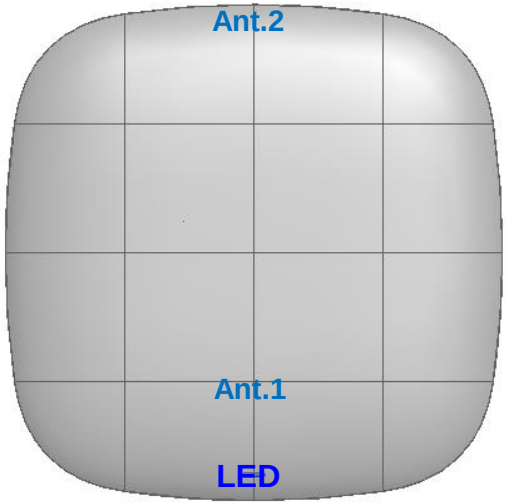

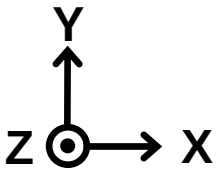

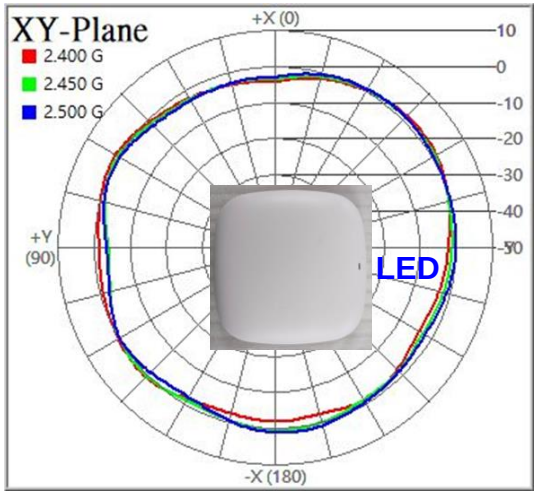

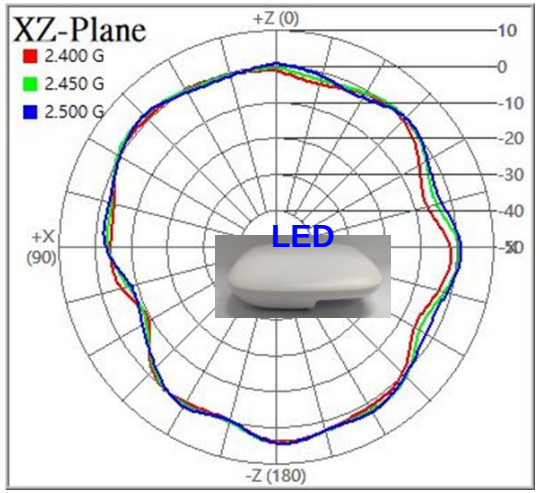

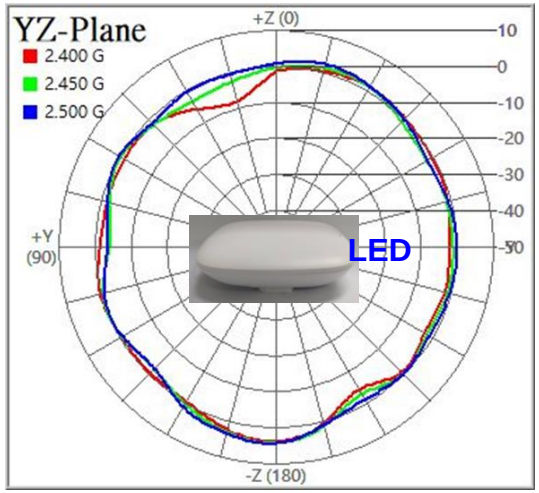

Combine pattern – @ 5GHz

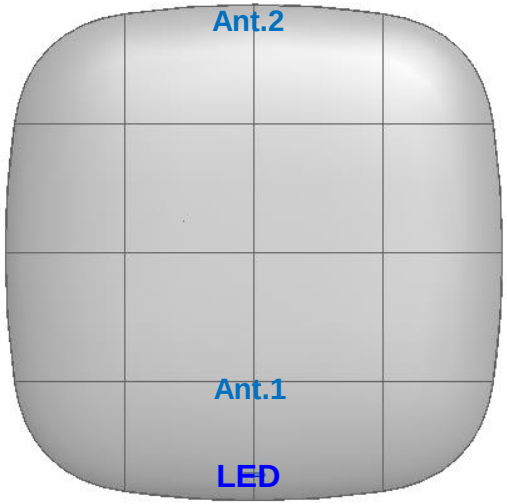

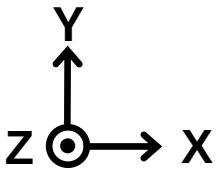

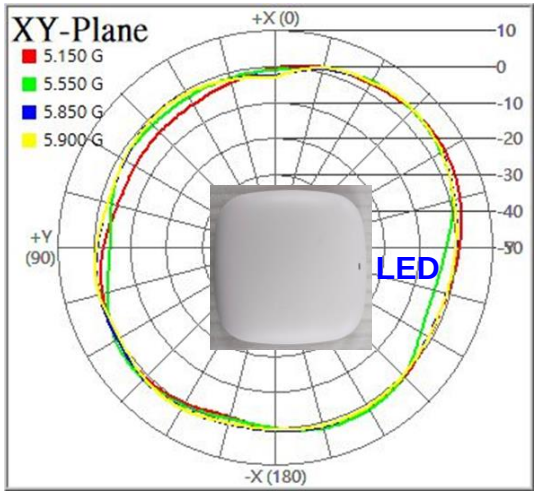

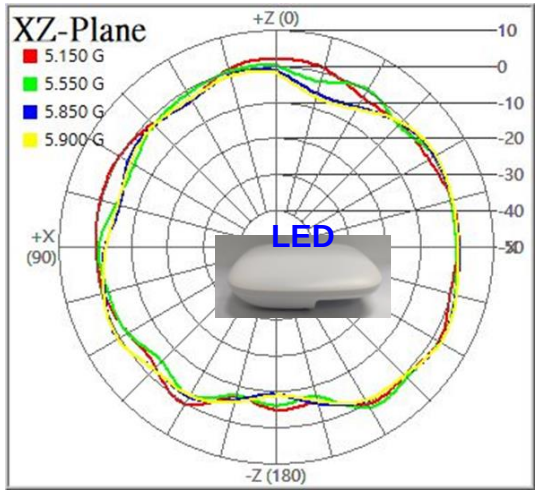

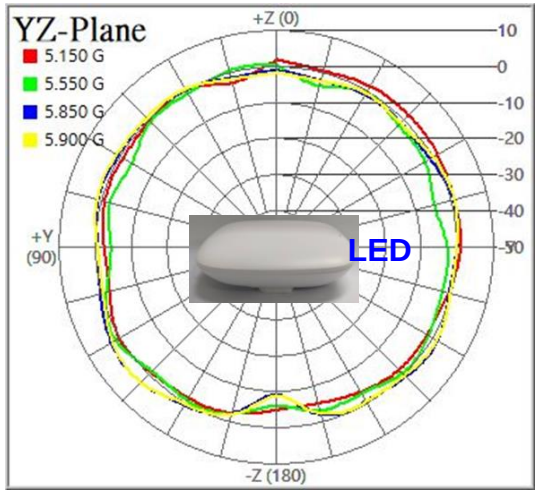

Antenna Efficiency and Gain

Antenna Performance				
Freq. (MHz)	Ant.1		Ant.2	
	Efficiency (%)	Peak Gain (dBi)	Efficiency (%)	Peak Gain (dBi)
2400	63	2.7	63	3.3
2450	68	3.1	64	4.0
2500	67	3.0	61	4.1
5150	67	4.0	60	4.6
5500	63	3.4	62	3.4
5850	67	4.2	66	3.3
5900	68	4.1	66	3.4