NETGEAR
BUSINESS

Installation Guide

AX1800 Dual Band PoE WiFi 6 Access Point

Model WAX210

201-31228-03

April 2024

NETGEAR, Inc.
350 East Plumeria Drive
San Jose, CA 95134, USA

NETGEAR INTERNATIONAL LTD
Floor 6, Penrose Two
Penrose Dock, Cork, T23 YY09, Ireland

© NETGEAR, Inc., NETGEAR and the NETGEAR Logo are trademarks of NETGEAR, Inc. Any non-NETGEAR trademarks are used for reference purposes only.

Package contents

Access Point Model WAX210

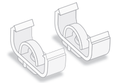

T-bar hooks

2 large screws and anchors for mounting to a wall and 2 small screws to attach the T-bar hooks to the access point

A power adapter is included only with a WAX210PA SKU.

NOTE: You can power up the WAX210 by connecting it to a PoE switch or to a power adapter. If you purchased a WAX210 SKU without an included power adapter, you can purchase one separately.

Overview

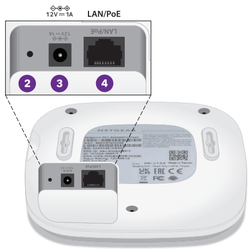

1 Front panel LED
2 Reset button
3 DC power connector
4 LAN/PoE port

CAUTION: Terms of Use
This device must be professionally installed. It is the installer's responsibility to follow local country regulations including operations within legal frequency channels, output power and DFS requirements. Vendor or Reseller or Distributor is not responsible for illegal wireless operations. Please see Device's Terms and Conditions for more details.

NOTE: During installation, if you do not see your country or region listed in the menu, update the access point's firmware and check again. If you still do not see your country or region listed, contact NETGEAR support.

Step 1. Connect the WAX210 to your network

Power up the WAX210 access point (AP) using one of the following methods:

- **Use a PoE switch**: Connect one end of an Ethernet cable to the LAN/PoE port of the AP and connect the other end to a PoE switch that supplies 802.3af PoE power. The power LED on the AP lights.
- **Use a power adapter**: Connect the power adapter's DC plug to the AP, and insert the power adapter in a power outlet. The power LED on the AP lights.
  Then, connect one end of an Ethernet cable to the LAN/PoE port of the AP, and connect the other end to a switch or a router.

Sample connections

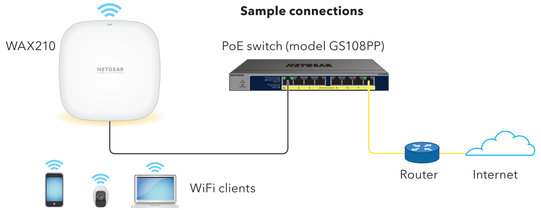

NOTE: WiFi and wireless have the same meaning.

After starting up and during setup, the LED can light in these colors:

	Solid amber: The AP is starting or the Reset button was pressed. If the LED remains amber, the AP does not detect an Ethernet connection.
	Slow blinking amber: The Internet connection is in the process of being set up.
	Fast blinking amber: The firmware is being updated or the AP is in the process of being reset to factory defaults because the Reset button was pressed.
	Solid green: The AP is functioning with Internet connectivity but no WiFi client is connected.
	Slow blinking green: The AP is functioning with Internet connectivity and at least one WiFi client is connected and sending or receiving traffic.

NOTE: The AP supports two types of WiFi networks (SSIDs):

- **Management WiFi network**: The special purpose WiFi network that you use to access the AP's device UI to configure and manage the AP. You can use the QR code or WiFi network information on the AP label to connect to the management WiFi network. To protect your WiFi network security, the management WiFi network does not let you connect to the Internet.
- **User WiFi network**: The WiFi network that provides general network access to authenticated users. During setup, you must configure the first user WiFi network. After you complete the initial setup process, you can configure up to three additional WiFi networks.

Step 2. Set up Internet access and connect

When you power up your AP, the management WiFi network becomes active. We recommend that you use a WiFi-enabled computer or tablet to connect to the management WiFi network for setup.

NOTE: For security reasons, the management WiFi network turns off when inactive for 15 minutes. If this happens during setup, press the **Reset** button for at least 11 seconds to reset the AP to default settings.

1. Connect your computer or tablet to the AP's management WiFi network (SSID) using one of the following methods:
   - **Scan the QR code**: Scan the QR code on the AP label to connect to the management WiFi network.
   - **Connect manually**: The management WiFi network is on the AP label. The default network key (password) for WiFi access is also on the AP label.

   The default name of the management WiFi network is printed on the AP's label. The WiFi network name uses the format "WAX210XXXXXX-CONFIG-ONLY," where XXXXXX is customized to every device (based on the last six digits of the MAC address).
2. Launch a web browser and enter **https://aplogin.net** in the address field. **NOTE**:
   - https://aplogin.net is the same as https://192.168.100.1.
   - Your browser might display a security warning because of the self-signed certificate on the AP, which is expected behavior. You can proceed, or add an exception for the security warning. For more information, see kb.netgear.com/000062980/.
   - If your browser redirects to a www.netgear.com page, your computer or tablet is not connected to the AP's management WiFi network. In that case, repeat the previous step.

   The page that lets you set up the AP displays.
3. From the **Country/Region** menu, select the country where you are using the AP.

   In some countries, the AP is sold with a preconfigured country or region setting and you cannot change it.

   NOTE: If you do not see your country or region listed in the menu, update the AP's firmware and check again. If you still do not see your country or region listed, contact NETGEAR support.
4. In the **AP Login New Password** field, set an AP login password for access to the AP's device UI, and confirm the password.
5. For your first user WiFi network, in the **SSID** field, set a WiFi network name, and in the **Passphrase** field, set the WiFi password.
6. Accept the terms of use, and click the **Apply** button.

   Your settings are saved and the AP restarts. This process takes about two minutes.

You are done. The AP is connected to the network and ready to use. You can now connect a computer or mobile device to the user WiFi network that you just set up, using the WiFi password that you just defined.

NOTE: For information about how to log in to the AP's device UI to change the AP's settings and update the firmware, see the user manual, which you can download from the NETGEAR Download Center at netgear.com/support/download by entering **WAX210** in the search field. The QR code for the NETGEAR Download Center is shown at the right.

Mounting options

You can mount the AP to a wall or to a ceiling with a 15/16 in. (24 mm) T-bar, or you can install the AP freestanding on a flat surface.

We recommend that you use a flat Ethernet cable so that the cable fits in the narrow space between the AP and the surface on which it is mounted or placed.

Before you mount the AP, first set up and test the AP to verify WiFi network connectivity.

Mount to a solid wall

The bottom of the AP includes two receptacles that let you mount the AP on two screws inserted in a wall.

CAUTION: Make sure that the wall is not damaged. For example, water damage can destroy a drywall.

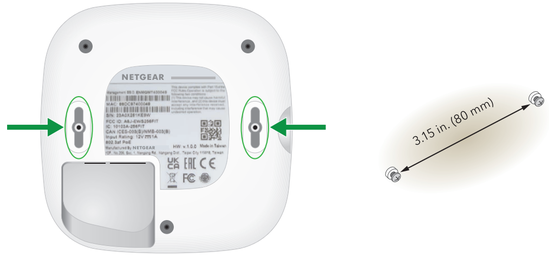

1. Mark the wall where you want to insert the provided anchors and large screws, which must be 3.15 in. (80 mm) apart, and insert the anchors and screws.

   Leave about 0.25 in. (6 mm) of each screw protruding from the wall so that you can insert the screws into the holes on the bottom of the AP.

   NOTE: Unless you insert the screws into a wall stud, do not insert the screws into the wall without anchors.

2. Connect an Ethernet cable, or both an Ethernet cable and power adapter, to the AP before mounting.
3. Line up the receptacles on the bottom of the AP with the screws in the wall and mount the AP to the wall.

Mount to a T-bar

The bottom of the AP includes two holes that let you attach the T-bar hooks to the AP.

1. Use the two provided small screws to attach the T-bar hooks to the AP
2. Connect an Ethernet cable, or both an Ethernet cable and power adapter, to the AP before mounting.
3. Hold the AP upside down at approximately a 30-degree angle, attach the hooks to one side of the T-bar, straighten the AP, and then push the AP up so that the hooks attach to the other side of the T-bar.

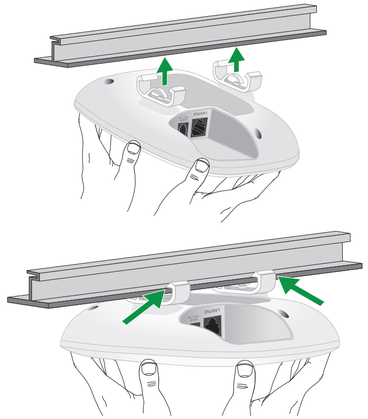

Unmount the AP

1. Hold the AP and slowly move one side down.
2. Gently force the hooks to disengage from the T-bar.

   CAUTION: Make sure you hold the AP so that it does not drop when you release it from the T-bar.

3. Lower the AP.

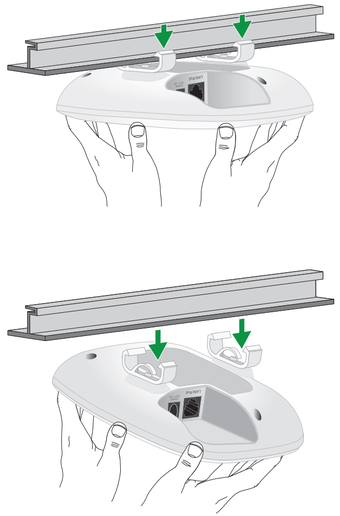

Support and Community

Visit netgear.com/support to get your questions answered and access the latest downloads.

You can also check out our NETGEAR Community for helpful advice at community.netgear.com.

Regulatory and Legal

Si ce produit est vendu au Canada, vous pouvez accéder à ce document en français canadien à https://www.netgear.com/support/download/.

(If this product is sold in Canada, you can access this document in Canadian French at https://www.netgear.com/support/download/.)

For regulatory compliance information including the EU Declaration of Conformity, visit https://www.netgear.com/about/regulatory/.

See the regulatory compliance document before connecting the power supply.

For NETGEAR's Privacy Policy, visit https://www.netgear.com/about/privacy-policy.

By using this device, you are agreeing to NETGEAR's Terms and Conditions at https://www.netgear.com/about/terms-and-conditions. If you do not agree, return the device to your place of purchase within your return period.

Do not use this device outdoors. The PoE source is intended for intra building connection only.

Applicable to 6 GHz devices only: Only use the device indoors. The operation of 6 GHz devices is prohibited on oil platforms, cars, trains, boats, and aircraft, except that operation of this device is permitted in large aircraft while flying above 10,000 feet. Operation of transmitters in the 5.925-7.125 GHz band is prohibited for control of or communications with unmanned aircraft systems.

Federal Communication Commission Interference Statement

This device complies with Part 15 of the FCC Rules. Operation is subject to the following two conditions: (1) This device may not cause harmful interference, and (2) this device must accept any interference received, including interference that may cause undesired operation.

This equipment has been tested and found to comply with the limits for a Class B digital device, pursuant to Part 15 of the FCC Rules. These limits are designed to provide reasonable protection against harmful interference in a residential installation. This equipment generates, uses and can radiate radio frequency energy and, if not installed and used in accordance with the instructions, may cause harmful interference to radio communications. However, there is no guarantee that interference will not occur in a particular installation. If this equipment does cause harmful interference to radio or television reception, which can be determined by turning the equipment off and on, the user is encouraged to try to correct the interference by one of the following measures:

- Reorient or relocate the receiving antenna.
- Increase the separation between the equipment and receiver.
- Connect the equipment into an outlet on a circuit different from that to which the receiver is connected.
- Consult the dealer or an experienced radio/TV technician for help.

FCC Caution: Any changes or modifications not expressly approved by the party responsible for compliance could void the user's authority to operate this equipment.

This transmitter must not be co-located or operating in conjunction with any other antenna or transmitter.

Radiation Exposure Statement:

This equipment complies with FCC radiation exposure limits set forth for an uncontrolled environment. This equipment should be installed and operated with minimum distance 20cm between the radiator & your body.

FCC regulations restrict the operation of this device to indoor use only