Exit Device
Installation Instructions

SARGENT
ASSA ABLOY

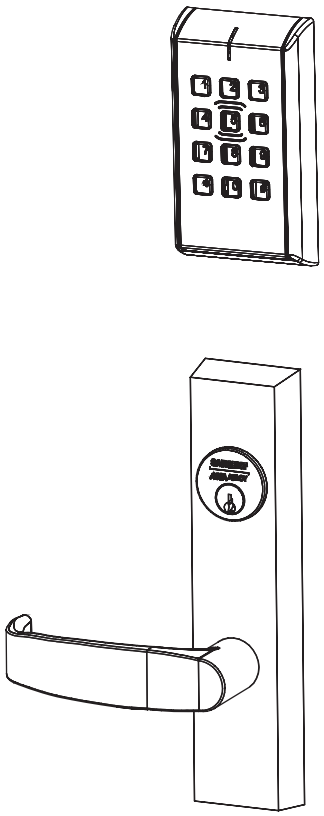

IN

Series
IN120 Wi-Fi
IN220 PoE

Exit Device
Installation Instructions

A8185D
04/21

Copyright 2016, 2019, 2021, Sargent Manufacturing Company, an ASSA ABLOY Group company. All rights reserved. Reproduction in whole or in part without the express written permission of Sargent Manufacturing Company is prohibited.

Experience a safer
and more open world

Table of Contents

1 Warning 3
2 Regulatory & Power Specifications 4
3 General Description 5
4 Hardware Specifications 5
5 Technical Specifications 5
6 Parts Breakdown 6
7 IN220 (PoE) Installation Wiring 9
8 Installation for 8877/8878 Rim Exit 13
9 Installation for 8977/8978 Mortise Type 19
10 IN120 / IN220 Installation Instructions 25
11 Operational Check 31

Copyright © 2016, 2019, 2021, Sargent Manufacturing Company, an ASSA ABLOY Group company. All rights reserved.
Reproductions in whole or in part without express written permission of Sargent Manufacturing Company is prohibited.

SARGENT
ASSA ABLOY

1 Warning

Changes or modifications to this device not expressly approved by ASSA ABLOY could void the user's authority to operate the equipment.

FCC:

This equipment has been tested and found to comply with the limits for a Class B digital device, pursuant to Part 15 of the FCC Rules. These limits are designed to provide reasonable protection against harmful interference in a residential installation. This equipment generates, uses, and can radiate radio frequency energy and, if not installed and used in accordance with the instructions, may cause harmful interference to radio communications. However, there is no guarantee that interference will not occur in a particular installation. If this equipment does cause harmful interference to radio or television reception, which can be determined by turning the equipment off and on, the user is encouraged to try to correct the interference by one or more of the following measures:

- Reorient or relocate the receiving antenna.
- Increase the separation between the equipment and receiver.
- Connect the equipment into an outlet on a circuit different from that to which the receiver is connected.
- Consult the dealer or an experienced radio/TV technician for help.

Industry Canada:

Under Industry Canada regulations, this radio transmitter may only operate using an antenna of a type and maximum (or lesser) gain approved for the transmitter by Industry Canada. To reduce potential radio interference to other users, the antenna type and its gain should be so chosen that the equivalent isotropically radiated power (e.i.r.p.) is not more than that necessary for successful communication.
Conformément à la réglementation d'Industrie Canada, le présent émetteur radio peut fonctionner avec une antenne d'un type et d'un gain maximal (ou inférieur) approuvé pour l'émetteur par Industrie Canada. Dans le but de réduire les risques de brouillage radioélectrique à l'intention des autres utilisateurs, il faut choisir le type d'antenne et son gain de sorte que la puissance isotrope rayonnée équivalente (p.i.r.e.) ne dépasse pas l'intensité nécessaire à l'établissement d'une communication satisfaisante.

General Regulatory Compliance:

This device contains license-exempt transmitter(s)/receiver(s) that comply with Innovation, Science and Economic Development Canada's license-exempt RSS(s). This device complies with part 15 of the FCC Rules. Operation is subject to the following two conditions: (1) this device may not cause harmful interference, and (2) this device must accept any interference received, including interference that may cause undesired operation.
Cet appareil contient des émetteurs/réceptuers exemptés de licence conformes aux RSS d'Innovation, Sciences et Développment économique Canada. Cet appareil est conforme à la section 15 de la réglementation de la FCC.
L'opération est sujette aux deux conditions suivantes: (1) ce dispositif peut ne pas causer l'interférence nocive, et (2) ce dispositif doit accepter n'importe quelle interférence reçue, y compris l'interférence qui peut causer l'opération peu désirée.

This equipment complies with FCC and IC radiation exposure limits set forth for general population (uncontrolled environment). This device must not be co-located or operating in conjunction with any other antenna or transmitter.
Cet équipement est conforme aux limites d'exposition aux radiations de la FCC et IC définies pour la population générale (environnement non contrôlé). Cet appareil ne doit pas être co-localisé ou fonctionner en conjonction avec une autre antenne ou un autre émetteur.

This product can expose you to lead which is known to the state of California to cause cancer and birth defects or other reproductive harm.
For more information go to: **www.P65warnings.ca.gov**.
Ce produit peut vous exposer au plomb qui, dans l'état de la Californie, est reconnu pour causer le cancer, des anomalies congénitales ou d'autres problèmes de reproduction.
Pour plus d'informations, visitez: **www.P65warnings.ca.gov**.

Any retrofit or other field modification to a fire rated opening can potentially impact the fire rating of the opening, and SARGENT Manufacturing makes no representations or warranties concerning what such impact may be in any specific situation. When retrofitting any portion of an existing fire rated opening, or specifying and installing a new fire-rated opening, please consult with a code specialist or local code official (Authority Having Jurisdiction) to ensure compliance with all applicable codes and ratings.

ATTENTION
OBSERVE PRECAUTIONS FOR HANDLING ELECTROSTATIC SENSITIVE DEVICES

To avoid possible damage from electrostatic discharge (ESD), some basic precautions should be used when handling electronic components:

- Minimize build-up of static by touching and/or maintaining contact with unpainted metal surfaces such as door hinges, latches, and mounting plates especially when mounting electronic components such as readers and controllers onto the door.
- Leave components (reader and controller) protected in their respective anti-static bags until ready for installation
- Do not touch pins, leads or solder connections on the circuit boards

Copyright © 2016, 2019, 2021, Sargent Manufacturing Company, an ASSA ABLOY Group company. All rights reserved.
Reproductions in whole or in part without express written permission of Sargent Manufacturing Company is prohibited.

2 Regulatory and Power Specifications

Electronic Authentication Specifications (Mobile Credentials)

For Mobile Credential-Enabled versions of this electronic lock
(Indicated by the credential code in the product order string):

- Mobile Credentials are transmitted to the lock via Bluetooth Smart or NFC ISO/IEC14443 and must use a mobile device enabled with these technologies.
- Credential and mobile device versions are specified by the credential provider.
- User must acquire the latest HID "Mobile Access" application available from Apple iStore or Android PlayStore.

This product is not intended for outside wiring as covered by Article 800 in the National Electrical Code, NFPA 70.

Compliance with IEEE 802.3 (at or af) specifications was not verified as part of UL 294/B.

The system shall not be installed in the fail-secure mode unless permitted by the local authority having jurisdiction and shall not interfere with the operation of Listed panic hardware.

- UL Listed - UL 294 Indoor Use
- CUL Listed - ULC-60839-11-1, Grade 1
- **UL 294 Access Control Ratings**:

Destructive Attack	Level 1
Line Security	Level 1
Endurance	Level 4
Standby Power	Level 1

Power Supply Specifications

IN120 (Wi-Fi version):

- Battery Power:
  Alkaline AA Batteries (6): 9V, 300mA
  (To comply with "Fire Listed" doors, batteries must be replaced with alkaline batteries only)
- Optional Hard Power (UL 294 Listed Power Supply Required):
  9-24VDC, 300mA

IN220 (PoE version):

- Power over Ethernet:
  Use UL 294 Listed, PoE Injector or Class 2 power limited power supply (55VDC, 90mA)
- UL testing was conducted on product powered by UL listed model POE20U-560(G) PoE Injector, manufactured by Phihong

Wiring methods shall be in accordance with the National Electrical Code (ANSI/NFPA70), CSA 22.1, Canadian Electrical Code (CEC), Part I, Safety Standard for Electrical Installations, local codes and the authorities having jurisdiction.

Copyright © 2016, 2019, 2021, Sargent Manufacturing Company, an ASSA ABLOY Group company. All rights reserved.
Reproductions in whole or in part without express written permission of Sargent Manufacturing Company is prohibited.

SARGENT
ASSA ABLOY

3 General Description

The SARGENT IN120 Wi-Fi and IN220 PoE series locks offer HID® multiCLASS SE® technology in a streamlined design, setting a new standard for aesthetics and performance, providng heightened identity security and multiple credentials, including mobile access.

The IN120 exit device uses IEEE 802.11 Wi-Fi communication and a flexible feature set for easier, more cost-effective installations, allowing facilities to leverage their IT infrastructure to expand access control coverage to more doors.

With the energy efficiency and streamlined architecture of Power-over-Ethernet (PoE) access control, the IN220 exit device allows for enhanced security and easier, more cost-effective installations.

4 Hardware Specifications

- Complete lockset with on-board memory
- ADA compliant
- Easily retrofits existing door preps (mortise)
- Latch - Stainless steel
- Optional deadbolt - Hardened steel
- Guardbolt - Stainless steel, non handed
- Handing (RH/RHR/LH/LHR) must be specified, but is easily field-reversible without opening the lock case
- Case - 12 gauge heavy duty wrought steel
- Cylinder retracts latchbolt (and deadbolt)
- Lock furnished for 1-3/4" doors. For other thicknesses, consult factory.
- Outside lever controlled by any combination of contactless reader or mechanical cylinder
- Inside lever retracts both latch and deadbolt
- Appropriate for use on interior and exterior facing door applications
- ANSI/BHMA A156.25 Listed Grade 1 Compliant

IN120 / 220 PoE Rim Exit

- Latch – 3/4" throw, stainless steel
- Accepts all SARGENT rim cylinders (8877 only)
- Key override standard with 8877 (#34 rim cylinder supplied)

IN120 / IN220 PoE Mortise Exit

- Latch – 3/4" throw, anti-friction, brass
- Key override standard with 8977 [#46 (1-3/4") mortise cylinder supplied]

5 Technical Specifications

HID® multiCLASS SE® technology offers support for the following credentials:

High Frequency (13.56 MHz)

- HID iCLASS®
- HID iCLASS SE® (SIO-enabled)
- HID iCLASS Seos™
- HID MIFARE® SE
- HID DESFire EV1 SE
- MIFARE® Classic
- DESFire EV1
- PIV/PIV-I**

**(40-bit BCD, 64-bit BCD, 75 bit, 128-bit or 200-bit outputs)

Low Frequency (125 kHz):

- HID Prox®

NFC & BLE-enabled mobile phones

- HID Mobile Access® (BLE & NFC)
- Apple Wallet Seos or DESFire® (NFC)

- Optional keypad:
  - PIN-only usage or dual authentication*
- Multiple time zone and holiday access scheduling
- First-in unlock or automatic unlock configuration, based on specified time schedule
- 10,000 per lock; 10,000 event audit trail
- Privacy button
- Wi-Fi (IEEE 802.11 b/g/n)
- PoE (IEEE 802.3af)

Power requirements:

- Alkaline AA Batteries: 9V, 300mA
- PoE - 55VDC, 90mA
- Optional Hard Power : 9-24VDC, 300mA

*For specific security information, please contact your local ASSA ABLOY Door Security Solutions sales consultant or call 800-810-WIRE.

Copyright © 2016, 2019, 2021, Sargent Manufacturing Company, an ASSA ABLOY Group company. All rights reserved.
Reproductions in whole or in part without express written permission of Sargent Manufacturing Company is prohibited.

Experience a safer and more open world

6 Parts Breakdown

Tools Required:

- #2 Phillips screwdriver
- Flat head screwdriver
- Security allen wrench

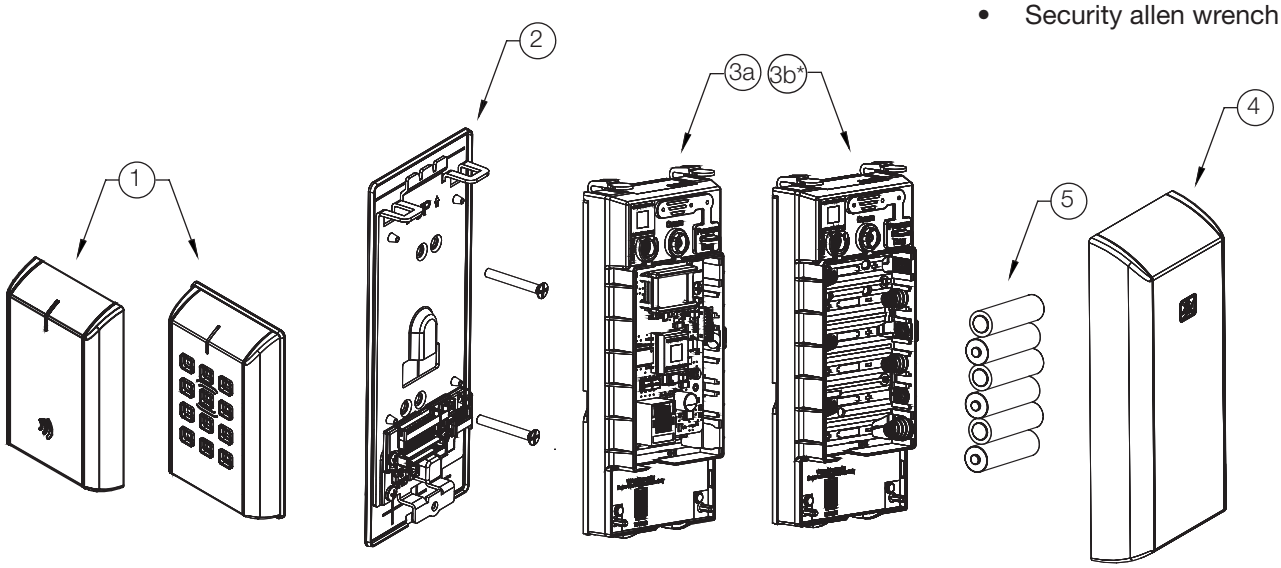

ITEM No.	DESCRIPTION
1*	Outside Escutcheon Assembly
2	Inside Mounting Plate Assembly (includes Gasket)
3a	PoE Controller Assembly
3b	Wi-Fi Controller Assembly* (batteries included)
4	Inside Escutcheon Assembly with Privacy Button
5	AA alkaline batteries (6)

*Consult catalog for electronic replacement part numbers

Copyright © 2016, 2019, 2021, Sargent Manufacturing Company, an ASSA ABLOY Group company. All rights reserved.
Reproductions in whole or in part without express written permission of Sargent Manufacturing Company is prohibited.

SARGENT
ASSA ABLOY

6 Parts Breakdown (Continued)

8877/8878 x ET x Lever Design IN220 Rim Exit Device

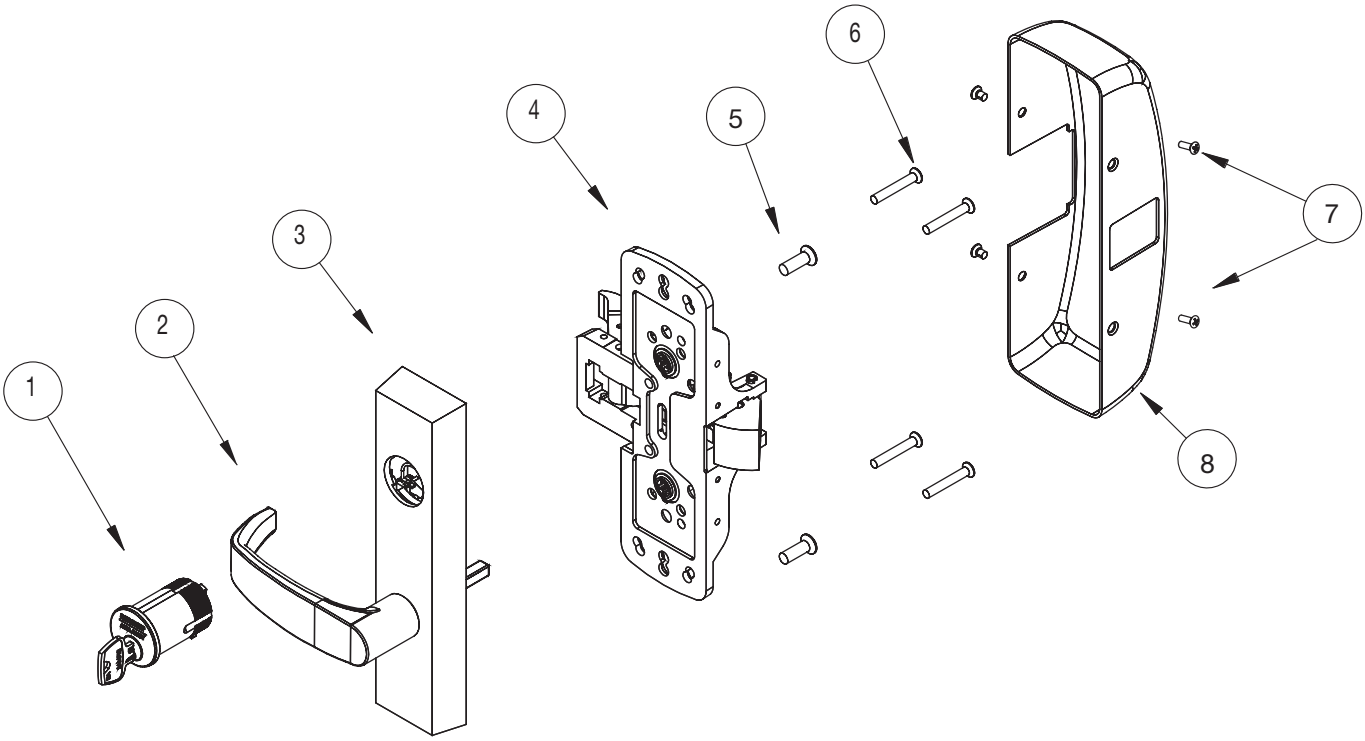

ITEM	PART No.	DESCRIPTION	REQ'D
1	--	Cylinder Assembly (Reference Catalog for Available Cylinders)	1
2	--	Lever (Reference Catalog for Available Styles)	1
3	97-4105	Exit Trim (ET) With Cylinder	1
	97-4106	Exit Trim (ET) Without Cylinder	
	52-4845	Motor Assembly (Separate - not shown)	1
4	68-7255	Chassis Assembly	1
	68-7256	Chassis Assembly (Fire Rated)	
	68-5836	Chassis Assembly (Latch Guarding)	
	68-5837	Chassis Assembly (Fire Rated Latch Guarding)	
5	01-4451	1/4-20 x 2-3/8" ET Screws	2
6	01-2273	#10 x 1-1/4" Chassis Screws	4
	01-1185	#10-24 x 3/4" Chassis Screws	4
7	97-0052	#8-32 x 5/16" Cover Screws	4
8	68-0406	Chassis Cover	1
	68-1014	Chassis Cover (With Guarding)	

Copyright © 2016, 2019, 2021, Sargent Manufacturing Company, an ASSA ABLOY Group company. All rights reserved.
Reproductions in whole or in part without express written permission of Sargent Manufacturing Company is prohibited.

6 Parts Breakdown (Continued)

8977/8978 x RT x Lever Design IN220 Mortise Exit Device

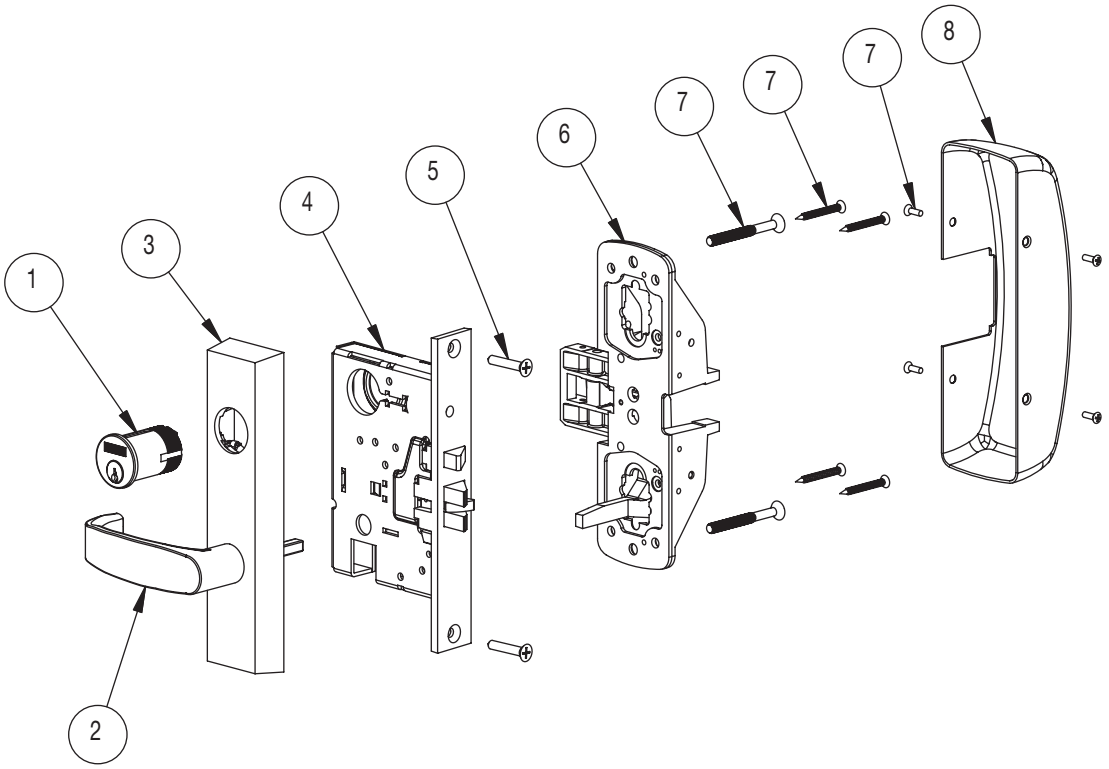

ITEM	PART No.	DESCRIPTION	REQ'D
1	--	Cylinder Assembly (Reference Catalog for Available Cylinders)	1
2	--	Lever (Reference Catalog for Available Styles)	1
3	97-4107	Exit Trim (ET) With Cylinder	1
	97-4108	Exit Trim (ET) Without Cylinder	
	52-4845	Motor Assembly (Separate - not shown)	
4	99-2401	8900 Lock Body Assembly LHR	1
	99-2402	8900 Lock Body Assembly RHR	
	99-2403	8900 Lock Body Assembly LHR (Non-Beveled Door)	
	99-2404	8900 Lock Body Assembly RHR (Non-Beveled Door)	
5	99-2628	Screw Pack	1
6	68-7253	Chassis Assembly LHR	1
	68-7254	Chassis Assembly RHR	
7	68-2143	Screw Pack	1
8	68-0407	Chassis Cover	1

Copyright © 2016, 2019, 2021, Sargent Manufacturing Company, an ASSA ABLOY Group company. All rights reserved.
Reproductions in whole or in part without express written permission of Sargent Manufacturing Company is prohibited.

SARGENT
ASSA ABLOY

7 IN220 (PoE) Installation Wiring

Overview

SARGENT IN220 PoE Typical Application

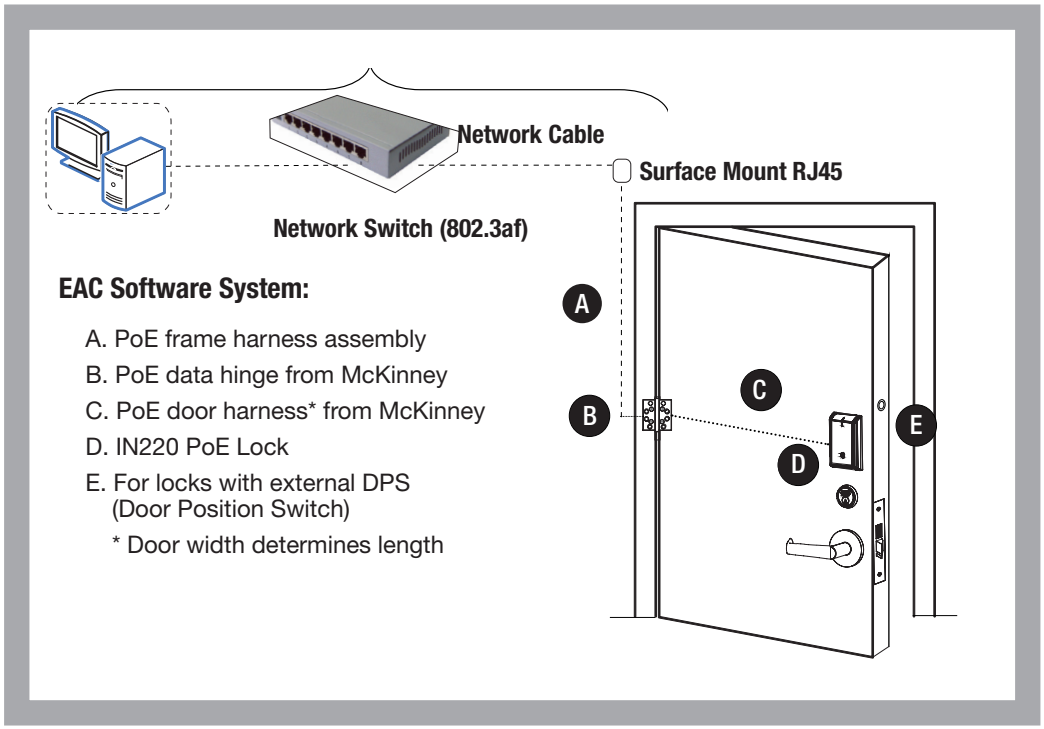

"Wiring methods shall be in accordance with the National Electrical Code (ANSI/NFPA70), CSA 22.1, Canadian Electrical Code (CEC), Part I, Safety Standard for Electrical Installations, local codes, and the authorities having jurisdiction."

Copyright © 2016, 2019, 2021, Sargent Manufacturing Company, an ASSA ABLOY Group company. All rights reserved.
Reproductions in whole or in part without express written permission of Sargent Manufacturing Company is prohibited.

7 IN220 (PoE) Installation Wiring (Continued)

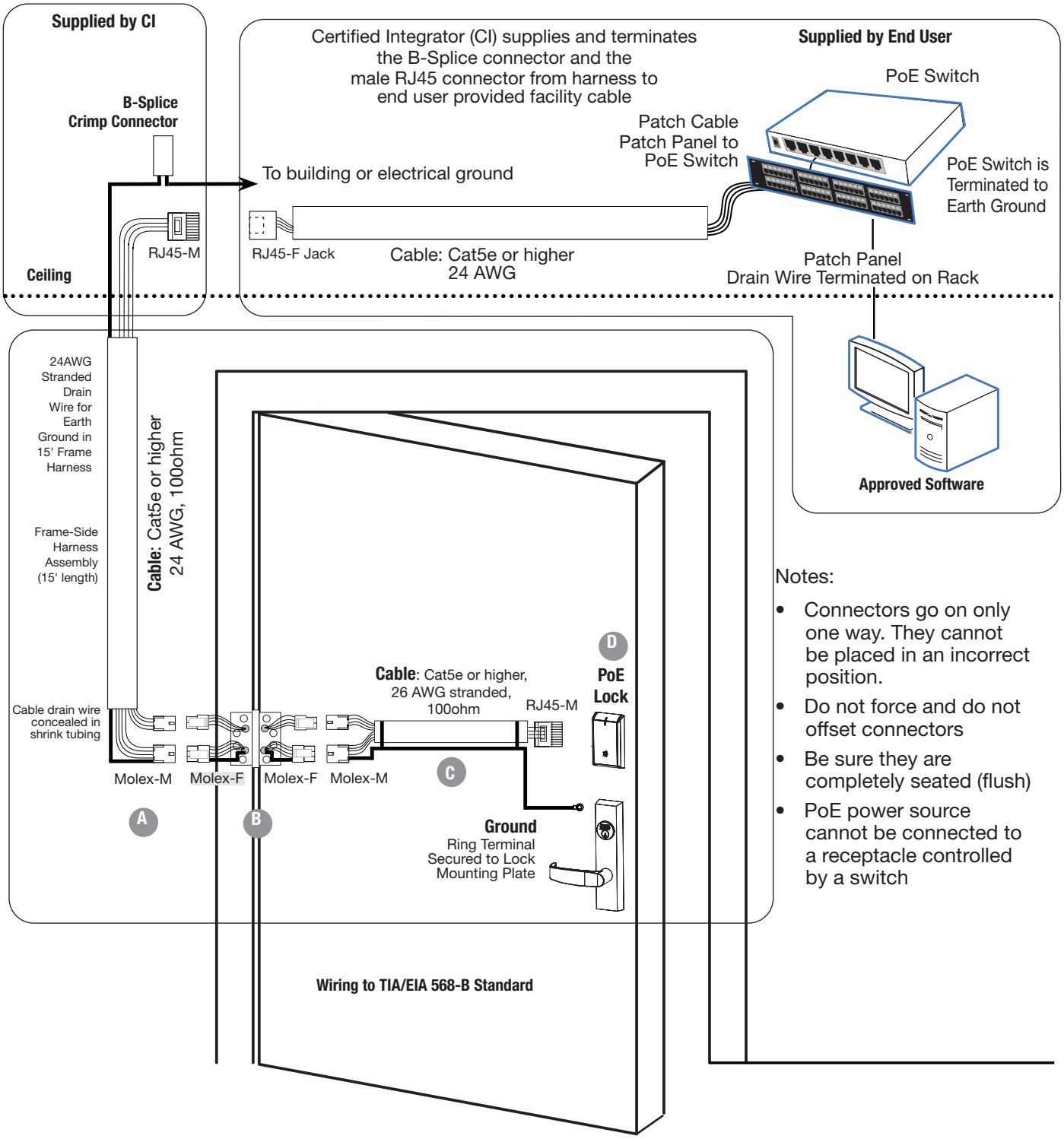

Notes:

- Connectors go on only one way. They cannot be placed in an incorrect position.
- Do not force and do not offset connectors
- Be sure they are completely seated (flush)
- PoE power source cannot be connected to a receptacle controlled by a switch

Copyright © 2016, 2019, 2021, Sargent Manufacturing Company, an ASSA ABLOY Group company. All rights reserved.
Reproductions in whole or in part without express written permission of Sargent Manufacturing Company is prohibited.

SARGENT
ASSA ABLOY

7 IN220 (PoE) Installation Wiring (Continued)

A Frame Harness Installation

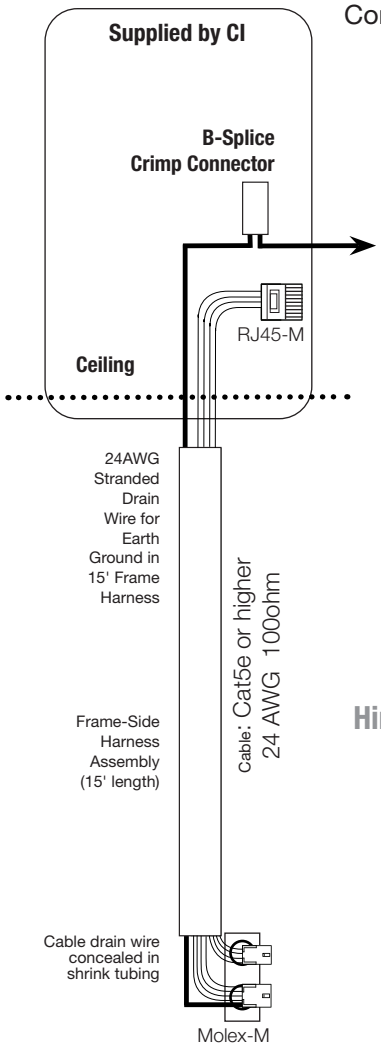

Components and wire harness supplied by McKinney. Suggested installation:

Cut end / ceiling-side PoE harness:

TIA/EIA 568-B Standard Wiring

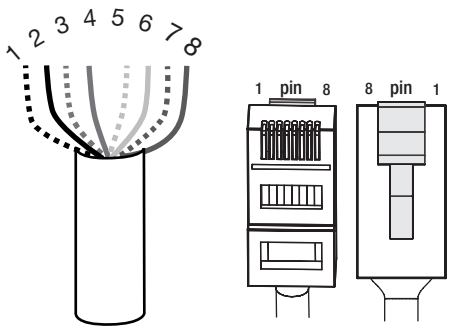

PIN	Wire	Pair Number
1	White/Orange	2
2	Orange	2
3	White/Green	3
4	Blue	1
5	White/Blue	1
6	Green	3
7	White/Brown	4
8	Brown	4

Do not confuse pair numbers with pin numbers. A pair number is used for reference only (eg: 10BaseT Ethernet uses pairs 2 & 3). The pin numbers indicate actual physical locations on the plug and jack.

Hinge side of PoE (Frame) harness:

1. Feed cut end of harness into hole on hinge-side through single access hole.
2. Push one connector back through the hole and feed into the other access hole.
   Each of the hinge-side harness connectors should end up threaded through a different access hole and matched to the same size pin connector from
   the door harness:
   - 4-pin male molex connector
   - 6-pin male molex connector with ground wire

B PoE Data Hinge

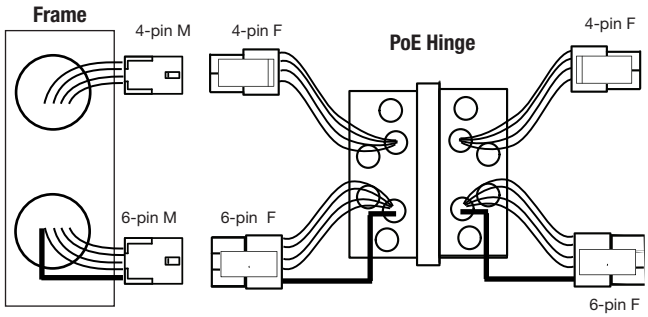

Hinge-side harness connectors:

- 4-pin female molex connector
- 6-pin female molex connector with ground wire

Lock-side harness connectors:

- 4-pin female molex connector
- 6-pin female molex connector with ground wire

Copyright © 2016, 2019, 2021, Sargent Manufacturing Company, an ASSA ABLOY Group company. All rights reserved.
Reproductions in whole or in part without express written permission of Sargent Manufacturing Company is prohibited.

7 IN220 (PoE) Installation Wiring (Continued)

C PoE Door Harness

Order of installation may vary. Refer to appropriate sections for instructions.

Hinge-side harness connectors:

- 4-pin male Molex connector
- 6-pin male Molex connector with ground wire

Lock-side harness connectors:

- Ring terminal
- Male RJ45 connector **(crimped after cable is fed through door)**

Notes:

- Connectors go on only one way. They cannot be plugged to incorrect position.
- Do not force and do not offset connectors.
- Be sure they are completely seated (flush).

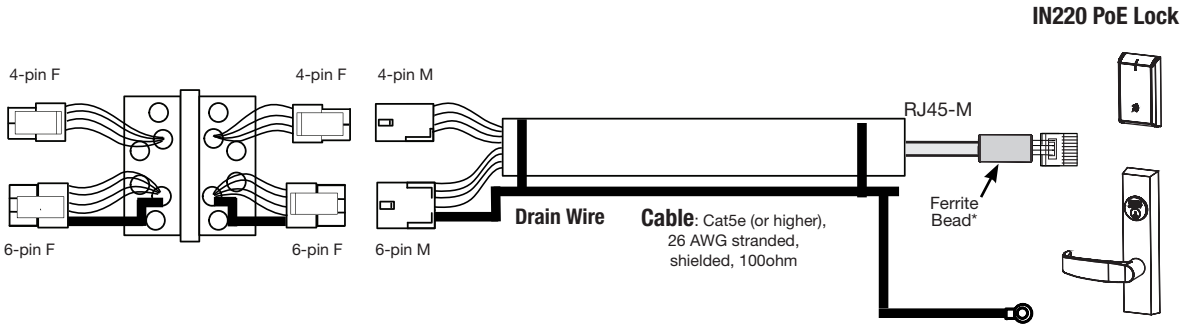

D PoE Lock

Order of installation may vary. Refer to appropriate sections for instructions.

1. Prop door open.
2. Using the ring terminal, carefully route the assembly through the door channel toward lock.

***Do not terminate PoE harness (with RJ45 M) until cable has been routed through door and inside mounting plate assembly.**
See Section 10, Step 3 - Installing the Connectors.

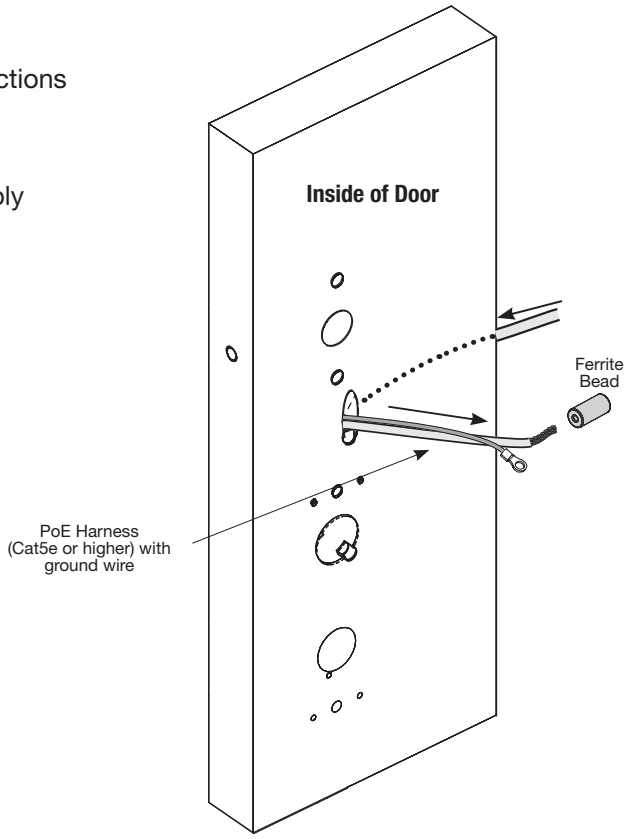

Copyright © 2016, 2019, 2021, Sargent Manufacturing Company, an ASSA ABLOY Group company. All rights reserved.
Reproductions in whole or in part without express written permission of Sargent Manufacturing Company is prohibited.

SARGENT
ASSA ABLOY

8 Installation Instructions for 8877/8878 Rim Exit

1 Prepare Door

A. Verify Hand and Bevel of Door

- Check hand of door.

  The exit device is non-handed and the trim is field reversible.
- Door should be fitted and hung.

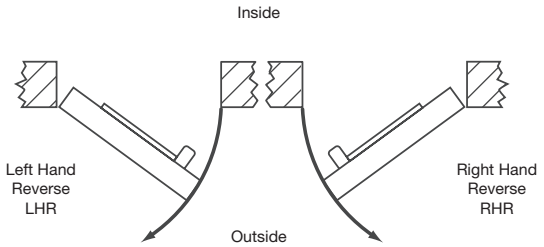

Fig. 1A

B. Verify Product Label

C. Door Preparation

Prior to installation, all holes must be free of burrs, debris and sharp edges.

Prepare door according to appropriate template (see website).

Field Template: A8149 (ships with product)

Door Manufacturer's Template: 4712

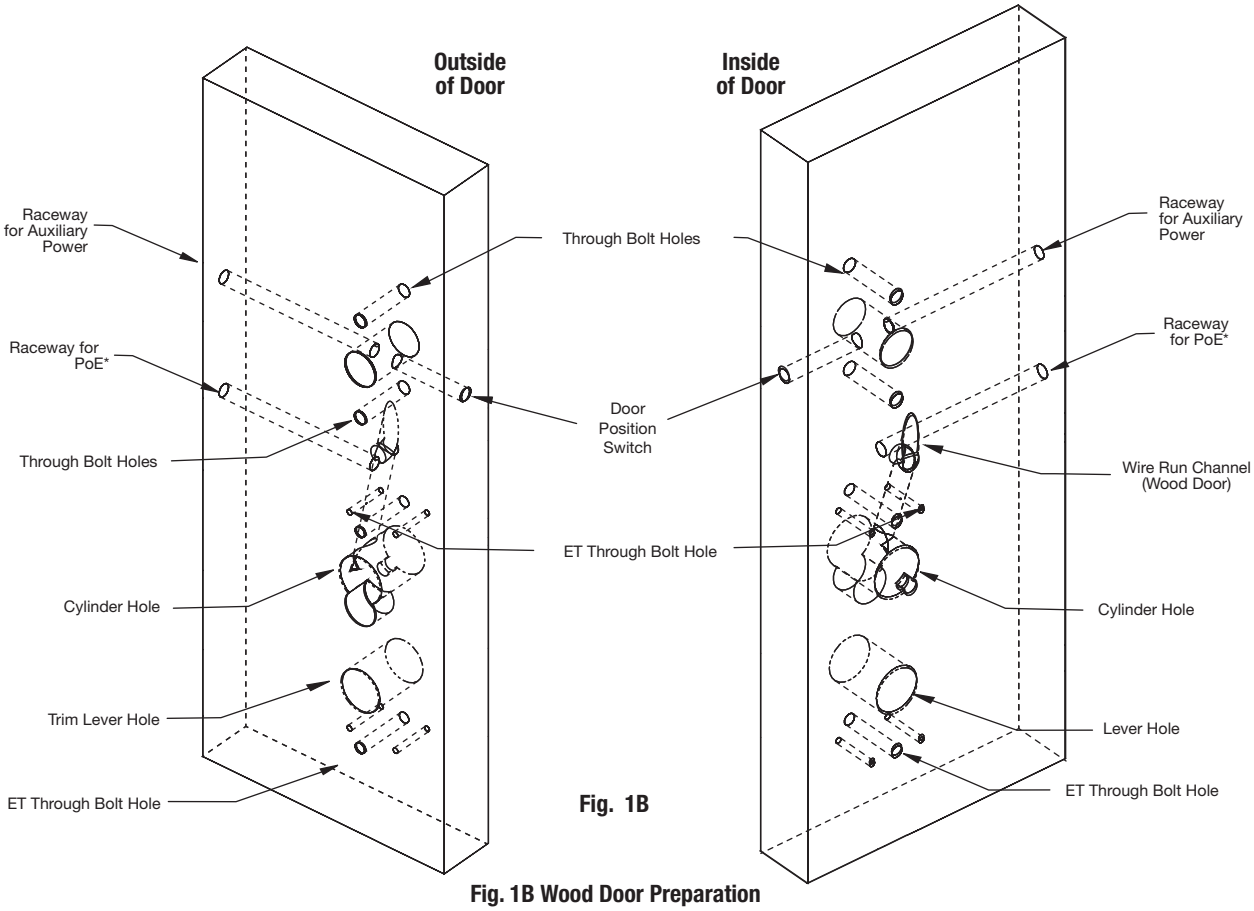

Fig. 1B

Fig. 1B Wood Door Preparation

***IN220 (PoE) Wiring and Installation See Section 7**

Copyright © 2016, 2019, 2021, Sargent Manufacturing Company, an ASSA ABLOY Group company. All rights reserved.
Reproductions in whole or in part without express written permission of Sargent Manufacturing Company is prohibited.

2 Install Door Position Switch (DPS)

Wood doors have 3/8” raceway to controller cutout and metal doors have 3/4” raceway to the controller cutout.

Refer to template A8214.

1. Insert connector end of DPS through the raceway on the latch edge of the door (Fig. 2A).
   Note: For metal doors, use DPS Collar.
2. Push DPS firmly into place by hand.
   IMPORTANT: DO NOT TAP SWITCH WITH ANY TOOL.

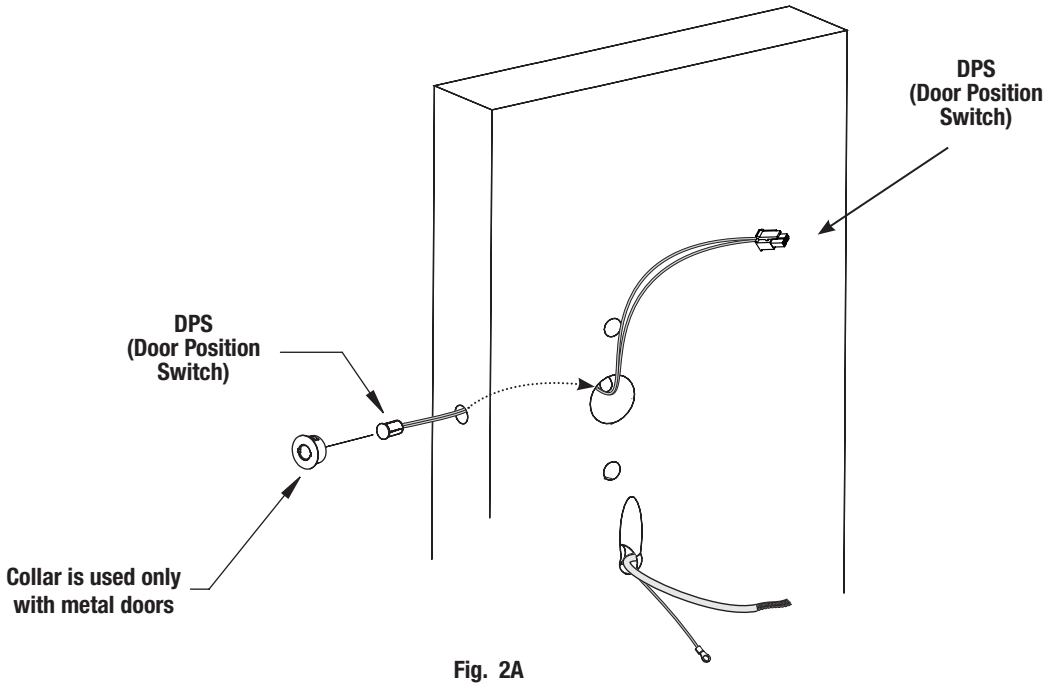

Fig. 2A

	Wood Frame	Metal Frame
Dim 1	3/8” ∅	3/4” ∅

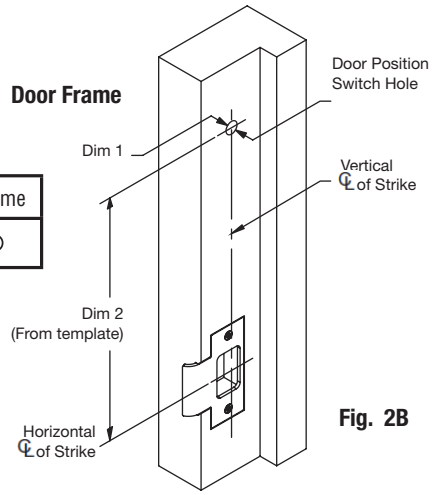

Fig. 2B

Copyright © 2016, 2019, 2021, Sargent Manufacturing Company, an ASSA ABLOY Group company. All rights reserved.
Reproductions in whole or in part without express written permission of Sargent Manufacturing Company is prohibited.

SARGENT
ASSA ABLOY

3 Mount Exit Device Chassis

NOTE: Exit chassis harness consists of a 6-pin female connector and two different-sized ground lugs (Fig. 3A)

1. Feed 6-pin connector and **larger** ground lug straight through to outside of door (Fig. 3A, B) while feeding smaller ground lug into wire hole, up through wire channel and out through inside of door (Fig. 3C).

DO NOT PINCH THE WIRE HARNESS.

2. Begin to secure the exit chassis with through bolts to the ET trim using (2) 1/4 -20 x 2-3/8" flat head machine screws.

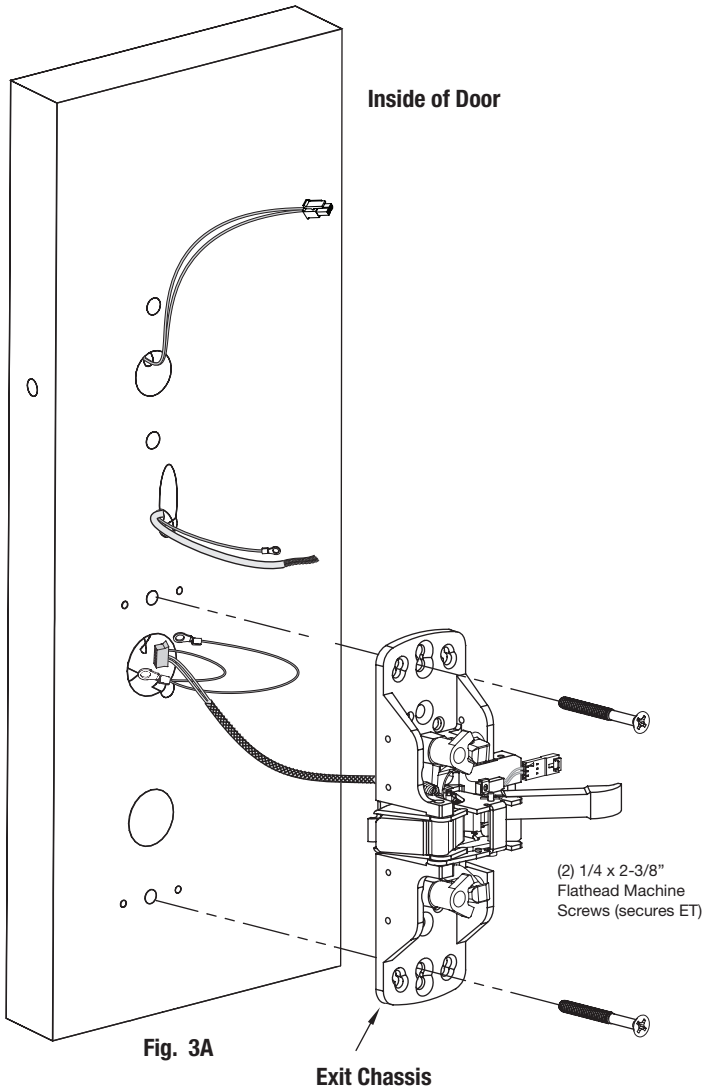

Fig. 3A

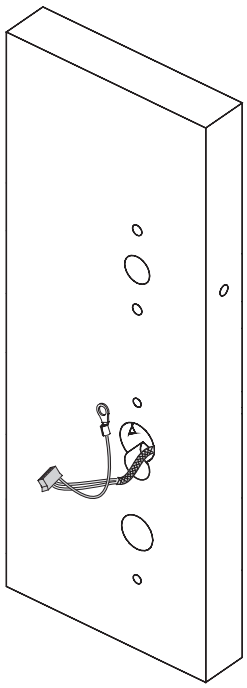

Fig. 3B

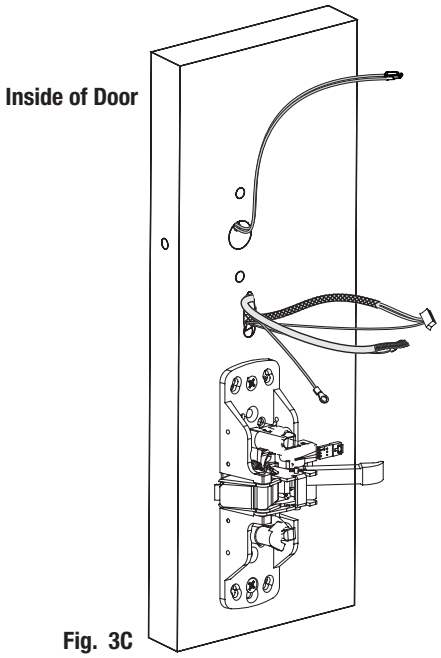

Fig. 3C

Copyright © 2016, 2019, 2021, Sargent Manufacturing Company, an ASSA ABLOY Group company. All rights reserved.
Reproductions in whole or in part without express written permission of Sargent Manufacturing Company is prohibited.

4 Mount Exit Trim (ET)

NOTE: For exterior applications, use ET gasket (52-0263) to seal between ET escutcheon and outside door surface.

A. Connect motor harness adapter to chassis harness connector (Fig. 4A).

B. For wood doors: Route ET wire harness connector through the cylinder hole, up and through the wire run channel to the controller cutout.

For metal doors: Route ET wire harness through the cylinder hole out the controller cutout.

C. Pass top ET trim mounting post through chassis harness ground lug.

D. Ensure ET spindle engages the lower hub of the exit chassis.

E. Fully tighten (2) chassis through bolts (Fig. 4B).

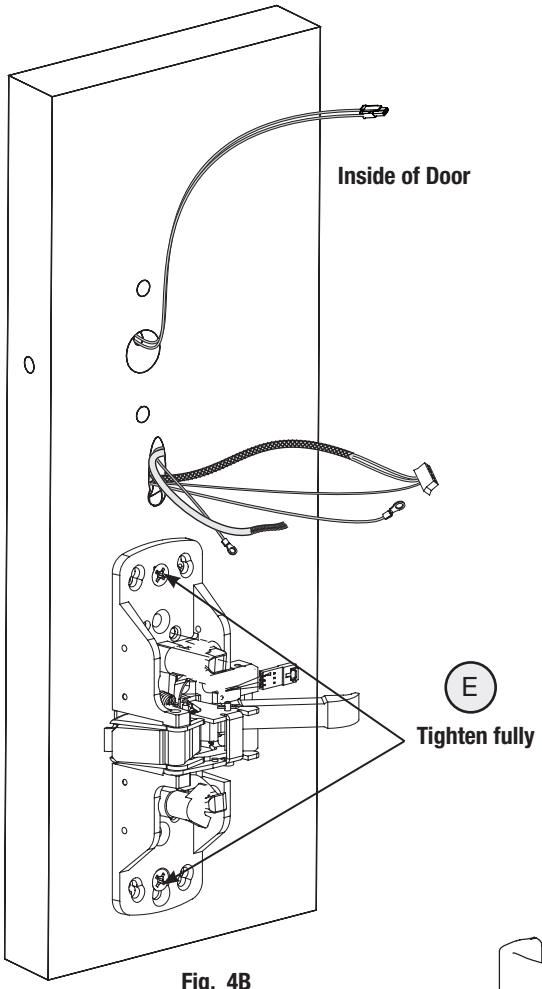

Fig. 4B

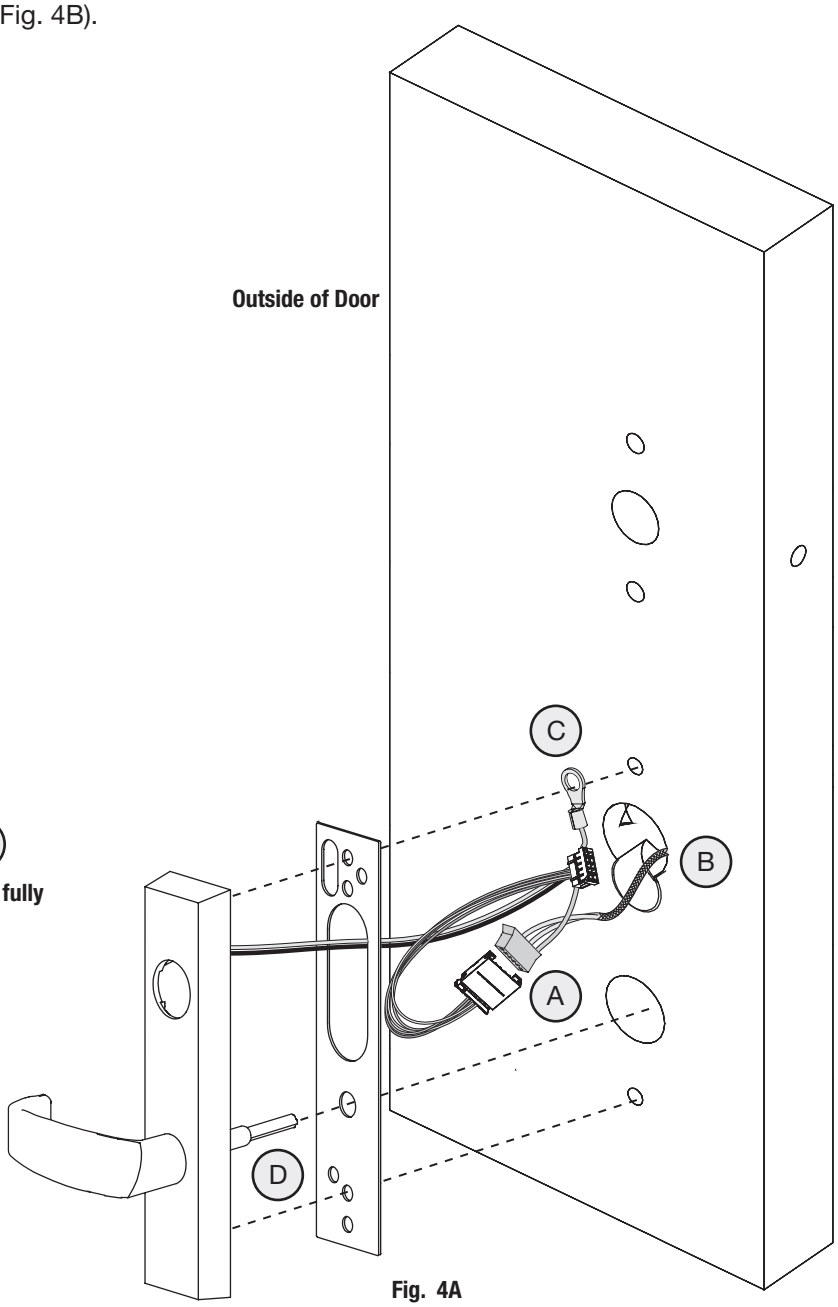

Fig. 4A

Copyright © 2016, 2019, 2021, Sargent Manufacturing Company, an ASSA ABLOY Group company. All rights reserved.
Reproductions in whole or in part without express written permission of Sargent Manufacturing Company is prohibited.

SARGENT
ASSA ABLOY

5 Install Cylinder

For devices without cylinder, go to Step 6.

1. While installing the rim cylinder, support the tail piece of the cylinder, verifying its engagement with the top hub of the exit chassis.

   Note: Be sure ET harness is clear of cylinder and tailpiece.

2. Secure the cylinder by through-bolting the cylinder through the exit chassis using (2) #12-24 x 1-7/8" connecting screws (see Fig. 6).
3. Verify that the key retracts latchbolt.

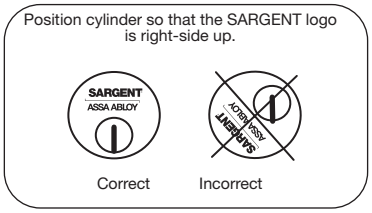

Fig. 5B

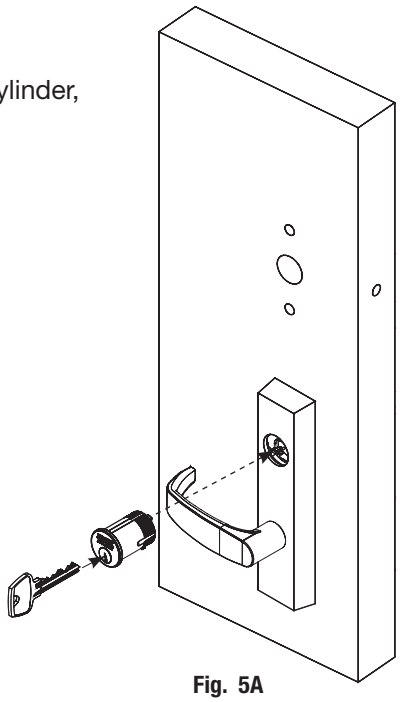

Fig. 5A

6 Secure Exit Chassis

To comply with UL certifications and for security:

Fasten exit chassis to door using (4) #10 wood screws (for wood door) or (4) #10-24 machine screws (for metal door).

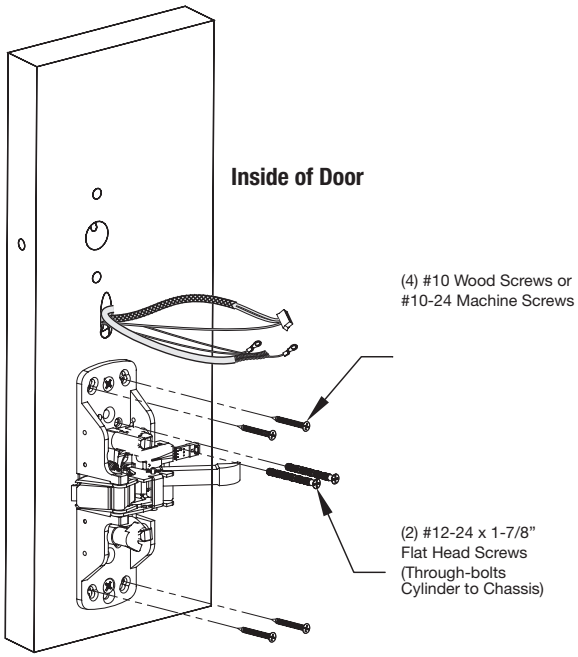

Fig. 6

Copyright © 2016, 2019, 2021, Sargent Manufacturing Company, an ASSA ABLOY Group company. All rights reserved.
Reproductions in whole or in part without express written permission of Sargent Manufacturing Company is prohibited.

7 Install Chassis Cover

Secure chassis cover to chassis using (4) #8-32 x 5/16” oval head machine screws (Fig. 7).

NOTE: Cable lengths exaggerated for illustrative purposes.

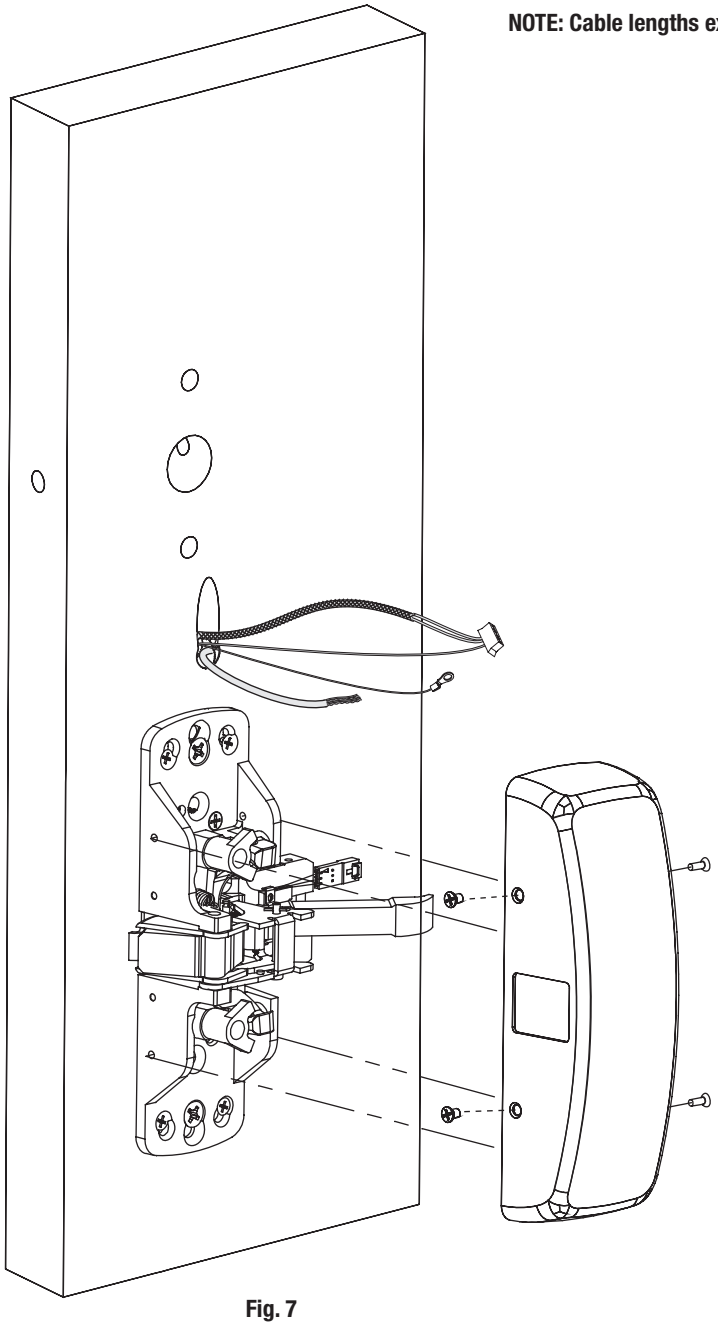

Fig. 7

To complete installation, continue to Section 10 - IN120 / IN220 Installation Instructions

Copyright © 2016, 2019, 2021, Sargent Manufacturing Company, an ASSA ABLOY Group company. All rights reserved.
Reproductions in whole or in part without express written permission of Sargent Manufacturing Company is prohibited.

SARGENT
ASSA ABLOY

9 Installation Instructions for Mortise Type 8977/8978 Exit Device

1 Door Preparation

A. Verify Hand and Bevel of Door

- Check hand of door.

This exit device is handed and is not reversible.

- Door should be fitted and hung.

B. Verify Product Label

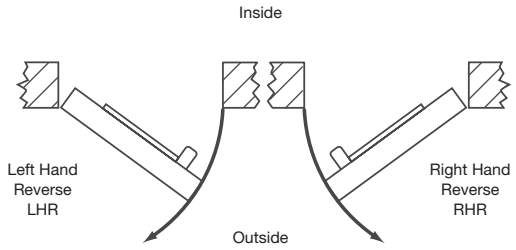

Fig. 1A

C. Prepare Door

1. If using a mullion, install it prior to installing hardware.
2. Doors should be pre-prepped (recommended).
3. Use appropriate templates:
   - IN220 template A8215 (Field Prep Template).
   - Exit installation instructions A6705.

Note: Instruction examples show wood door installation.

For metal doors, route cables inside door.

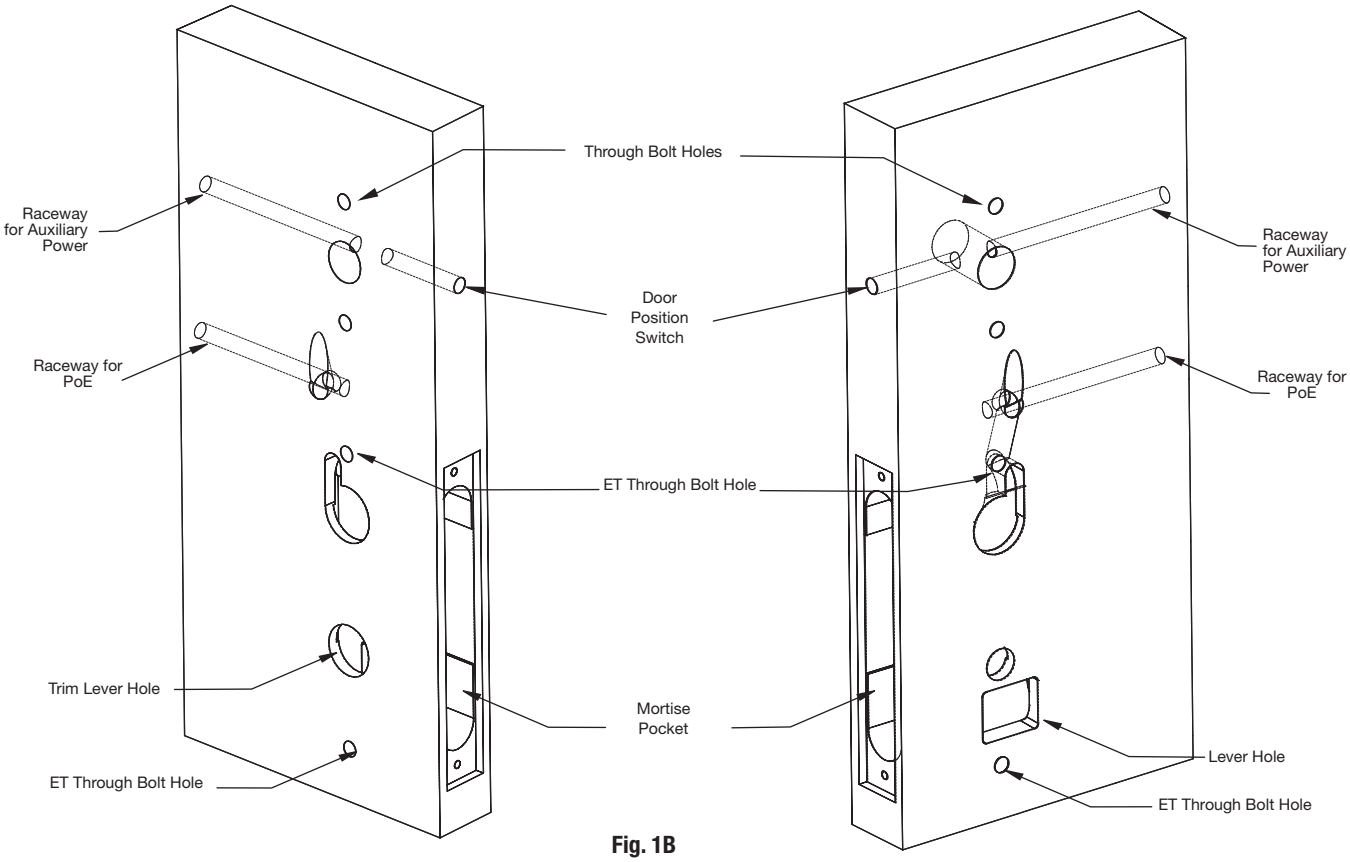

Fig. 1B

***IN220 (PoE) Wiring and Installation See Section 7**

Copyright © 2016, 2019, 2021, Sargent Manufacturing Company, an ASSA ABLOY Group company. All rights reserved.
Reproductions in whole or in part without express written permission of Sargent Manufacturing Company is prohibited.

2 Install Door Position Switch (DPS)

Wood doors have 3/8” raceway to controller cutout and metal doors have 3/4” raceway to the controller cutout.

Refer to template A8215.

1. Insert connector end of DPS through the raceway on the latch edge of the door (Fig. 2A).

   Note: For metal doors, use DPS Collar.

2. Push DPS firmly into place by hand.

   IMPORTANT: DO NOT TAP SWITCH WITH ANY TOOL.

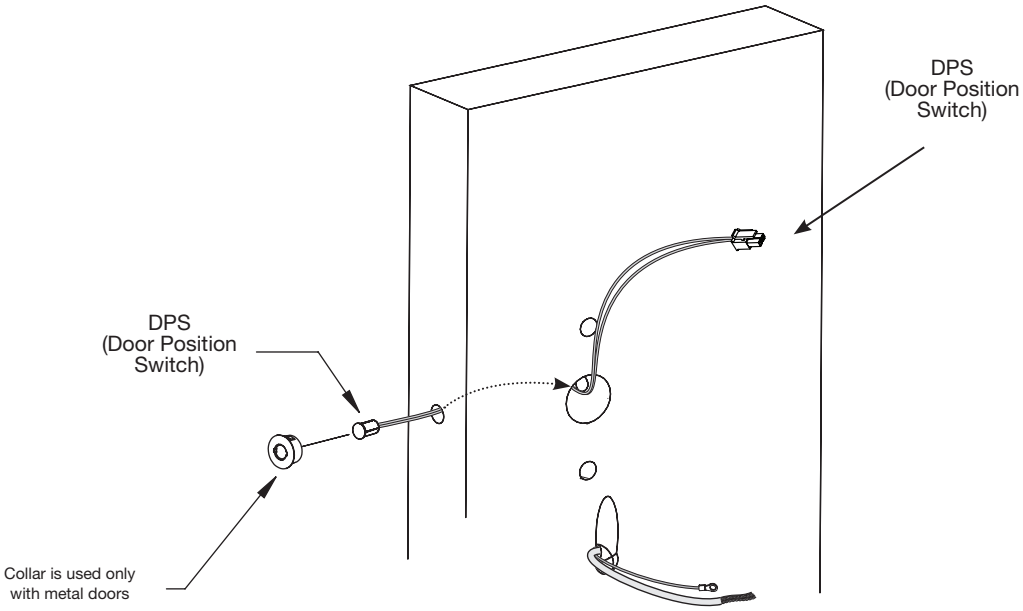

Fig. 2A

Door Frame

	Wood Frame	Metal Frame
Dim 1	3/8” ∅	3/4” ∅

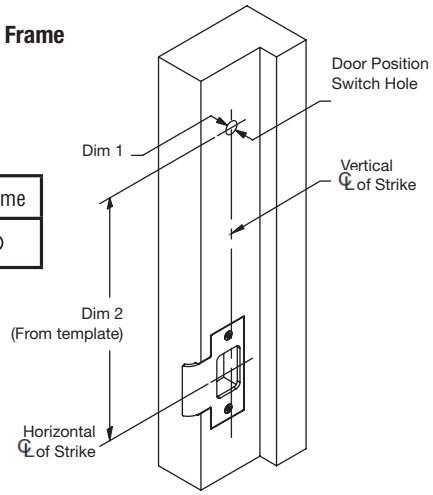

Fig. 2B

Copyright © 2016, 2019, 2021, Sargent Manufacturing Company, an ASSA ABLOY Group company. All rights reserved.
Reproductions in whole or in part without express written permission of Sargent Manufacturing Company is prohibited.

SARGENT
ASSA ABLOY

3 Mount Mortise & Exit Device Chassis

1. Slide mortise lock into door and loosely secure with (2) flat head screws.

NOTE: Exit chassis harness consists of a 6-pin female connector and two different-sized ground lugs (Fig. 3A)

2. Feed 6-pin connector and larger ground lug straight through to outside of door (Fig. 3A, B) while feeding smaller ground lug into wire hole, up through wire channel and out through inside of door (Fig. 3A).

DO NOT PINCH THE WIRE HARNESS.

3. Begin to secure the exit chassis with through bolts to the ET trim using (2) 1/4 -20 x 2-3/8" flat head machine screws.

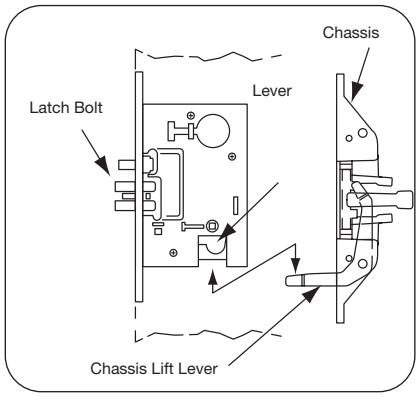

3B Detail

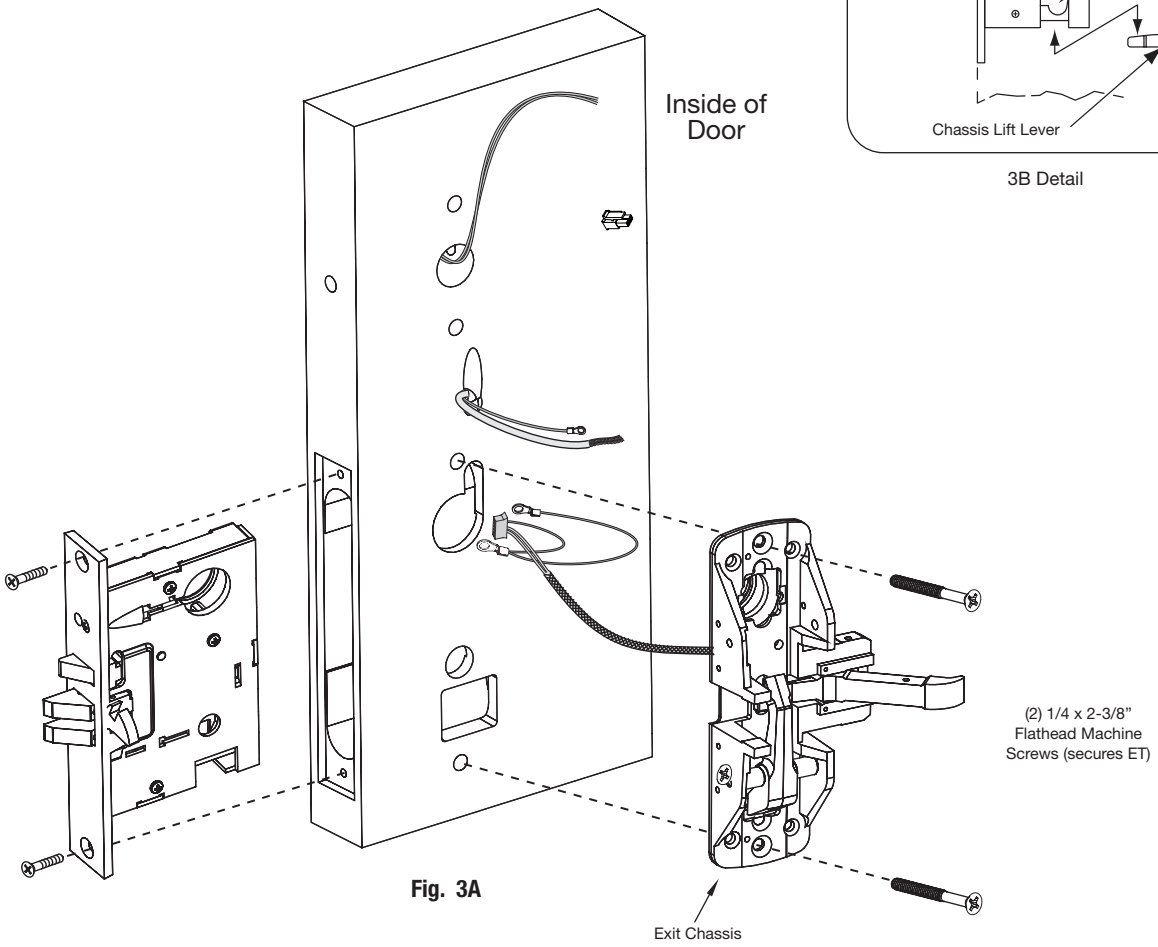

Fig. 3A

Copyright © 2016, 2019, 2021, Sargent Manufacturing Company, an ASSA ABLOY Group company. All rights reserved.
Reproductions in whole or in part without express written permission of Sargent Manufacturing Company is prohibited.

4 Position Exit Trim (ET)

NOTE: For exterior applications, use ET gasket (52-0263) as a seal between ET escutcheon and outside door surface.

A. Connect motor harness adapter to chassis harness connector (Fig. 4A).

B. For wood doors: Route ET wire harness connector through the cylinder hole, up and through the wire run channel to the controller cutout.

For metal doors: Route ET wire harness through the cylinder hole out the controller cutout.

C. Pass top ET trim mounting post through chassis harness ground lug.

D. Ensure ET spindle engages the lower hub of the exit chassis.

E. Fully tighten (2) chassis through bolts (Fig. 4B).

NOTE: Cable lengths exaggerated for illustrative purposes

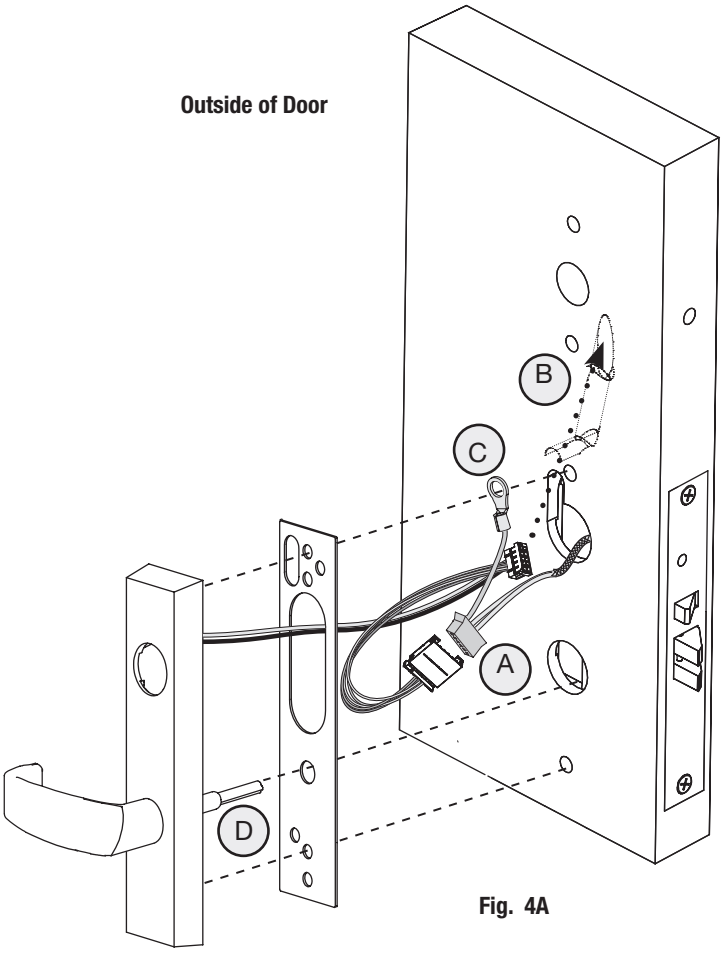

Fig. 4A

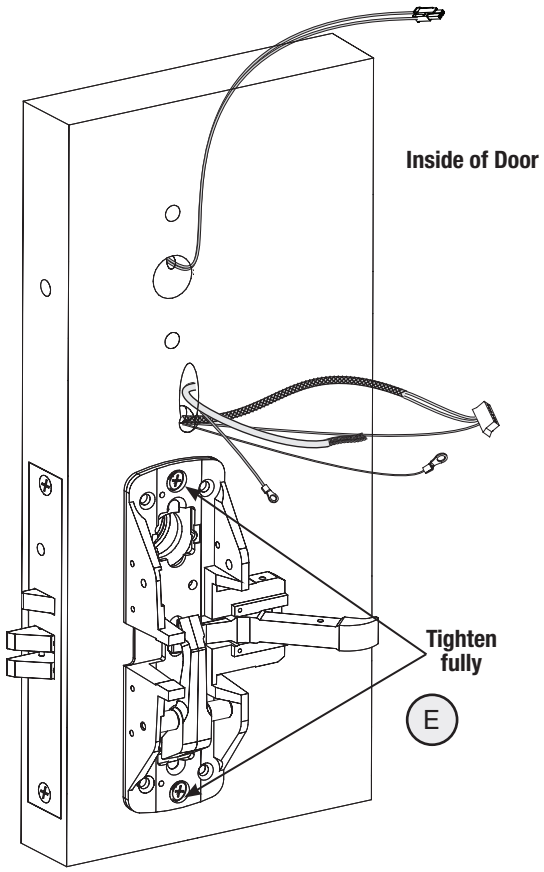

Fig. 4B

Copyright © 2016, 2019, 2021, Sargent Manufacturing Company, an ASSA ABLOY Group company. All rights reserved.
Reproductions in whole or in part without express written permission of Sargent Manufacturing Company is prohibited.

SARGENT
ASSA ABLOY

5 Install Cylinder

For devices without cylinder, go to Step 6.

1. While installing the rim cylinder, support the tail piece of the cylinder, verifying its engagement with the top hub of the exit chassis.

   Note: Be sure ET harness is clear of cylinder and tailpiece.

2. Secure the cylinder by through-bolting the cylinder through the exit chassis using (2) #12-24 x 1-7/8" connecting screws (see Fig. 6).
3. Verify that the key retracts latchbolt.

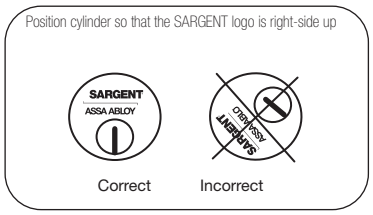

Fig. 5A

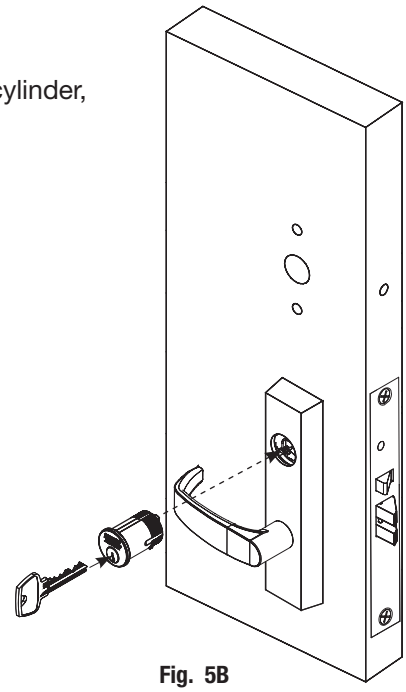

Fig. 5B

6 Secure Exit Chassis

To comply with UL certifications and for security:

Fasten exit chassis to door using (4) #10 wood screws (for wood door) or (4) #10-24 machine screws (for metal door).

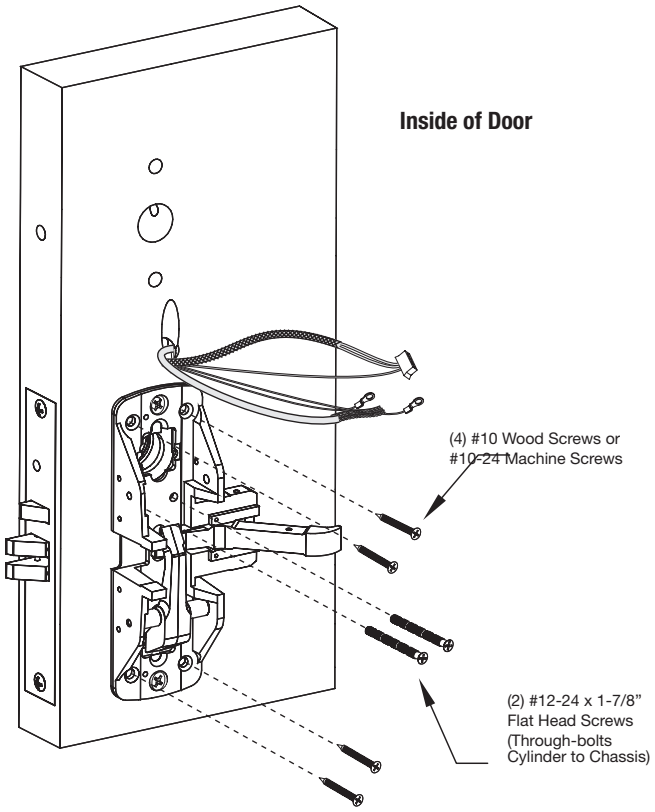

Fig. 6

Copyright © 2016, 2019, 2021, Sargent Manufacturing Company, an ASSA ABLOY Group company. All rights reserved.
Reproductions in whole or in part without express written permission of Sargent Manufacturing Company is prohibited.

7 Install Chassis Cover

Secure chassis cover to chassis using (4) #8-32 x 5/16” oval head machine screws (Fig. 7).

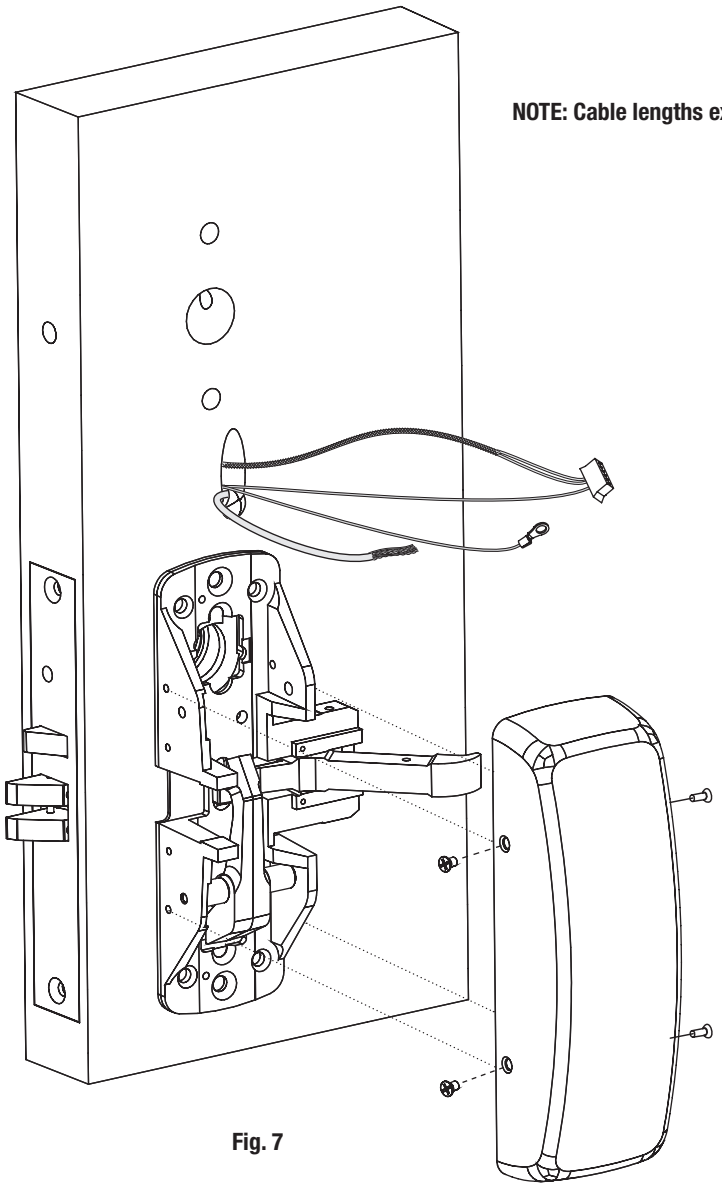

NOTE: Cable lengths exaggerated for illustrative purposes.

Fig. 7

To complete installation, continue to Section 10 - IN120 / IN220 Installation Instructions

Copyright © 2016, 2019, 2021, Sargent Manufacturing Company, an ASSA ABLOY Group company. All rights reserved.
Reproductions in whole or in part without express written permission of Sargent Manufacturing Company is prohibited.

SARGENT
ASSA ABLOY

10 IN120 / IN220 Installation Instructions

1 Outside Reader and Mounting Plate Assembly Installation

1. Orient reader / keypad so LED lens is at the top.
2. Feed the cable/connector through door (from outside to inside).
3. Install reader to the outside of door by aligning mounting posts with the door preparation holes.

   Hold reader flush against door while ensuring proper alignment.

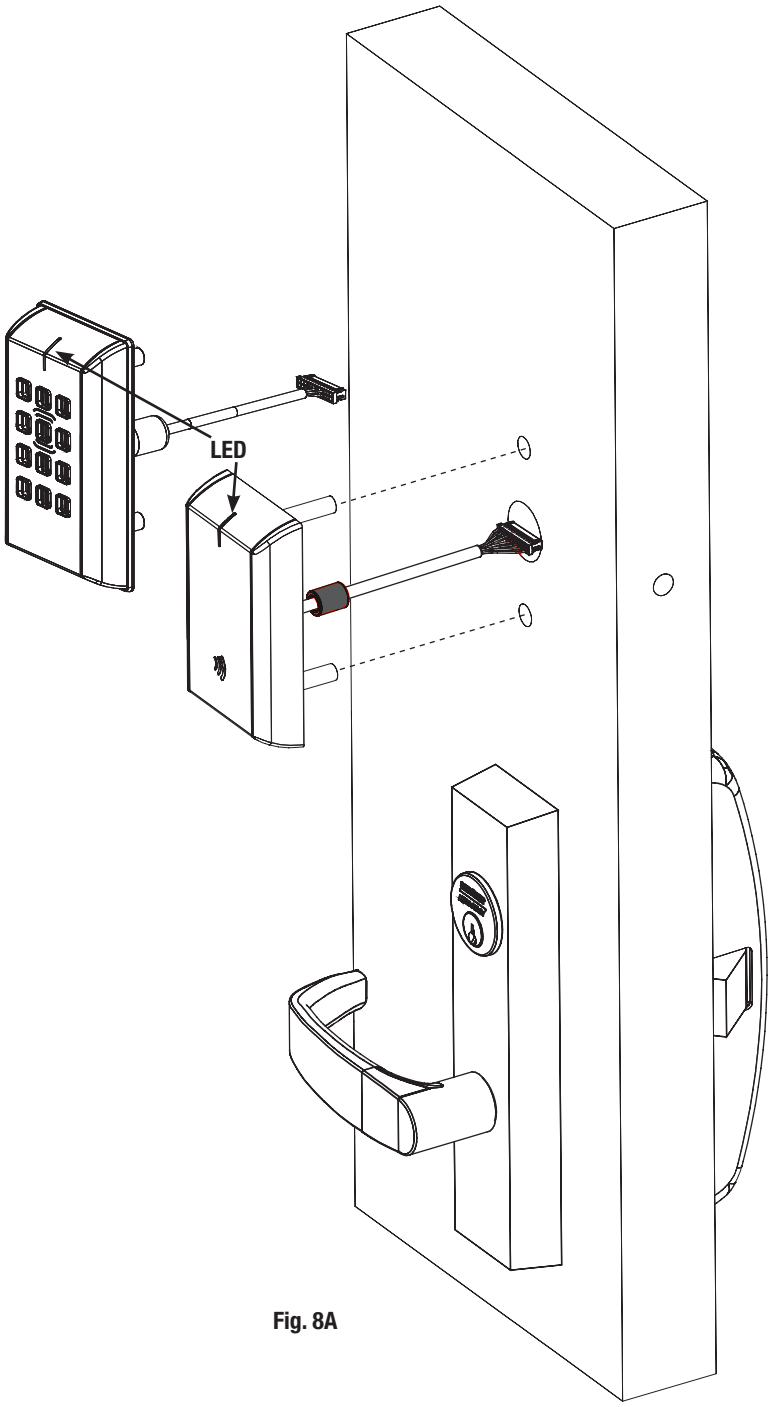

Fig. 8A

Copyright © 2016, 2019, 2021, Sargent Manufacturing Company, an ASSA ABLOY Group company. All rights reserved.
Reproductions in whole or in part without express written permission of Sargent Manufacturing Company is prohibited.

2 Outside Reader and Mounting Plate Assembly Installation (Continued)

1. Next feed cables/connectors through the inside mounting assembly (and gasket if required*).
2. **Insert and partially tighten (2) through-bolts prior to installation of connectors.**

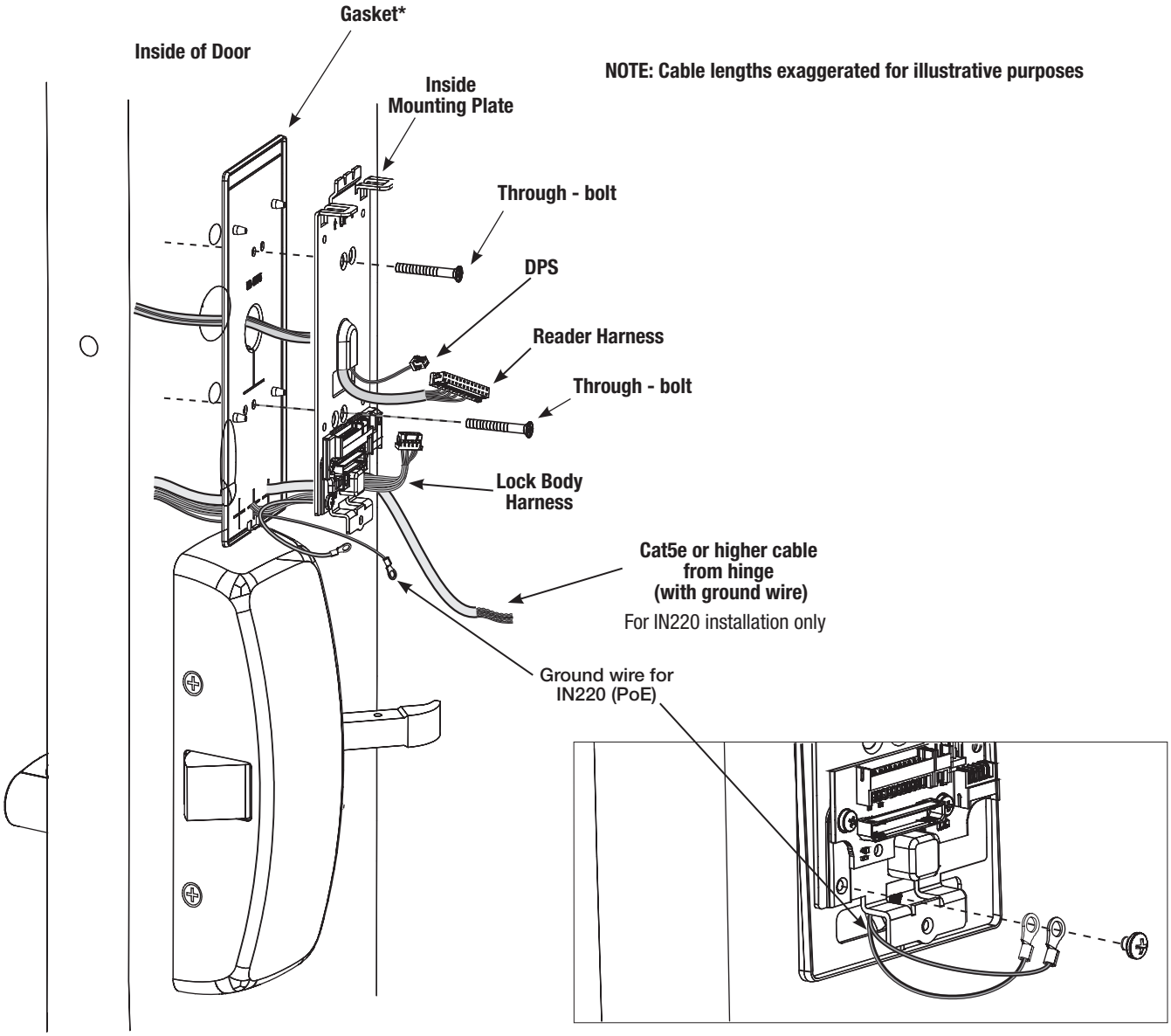

Fig. 2A

Fig. 2B

3. Secure ground lug(s) with #6-32 machine screw (Fig. 2B).

*Gasket is required for outdoor installations.

If installing with gasket; separate gasket from mounting plate to feed cables/connectors through holes as indicated (Fig. 2A).

Once cables/connectors are fed through, reattach gasket to mounting plate.

Copyright © 2016, 2019, 2021, Sargent Manufacturing Company, an ASSA ABLOY Group company. All rights reserved.
Reproductions in whole or in part without express written permission of Sargent Manufacturing Company is prohibited.

SARGENT
ASSA ABLOY

3 Installation of Connectors

Important Note: Before you secure the connectors

CAUTION - Do not allow debris to enter connector contacts

Ensure connectors are covered with silicone dielectric compound (grease)*

- Snip end of packet to dispense grease
- Ensure all connector pins and contacts (Fig. 3A) are covered - **do not overfill or over-apply****

*Supplied tube contains 5 grams of silicone dielectric compound (grease)

**Evenly distribute grease; full application requires approximately 2.5 grams

IMPORTANT: Do not run wires through bottom hole in plate (Fig. 3A, B) - it will damage wires and the controller connector. Route wires around flange, do not route wires through the flange hole (Fig. 3B).

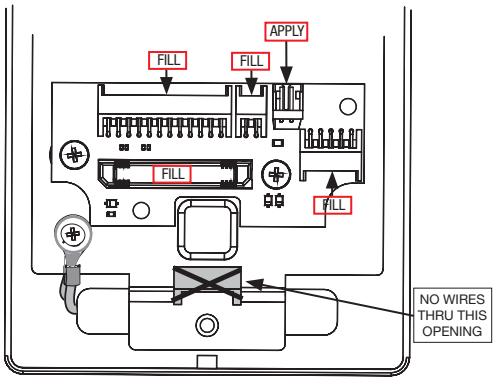

Fig. 3A

Secure the following connectors (Fig. 3A, B):

A. Secure the 4-pin DPS connector.

B. Secure the 10-pin lock body assembly connector.

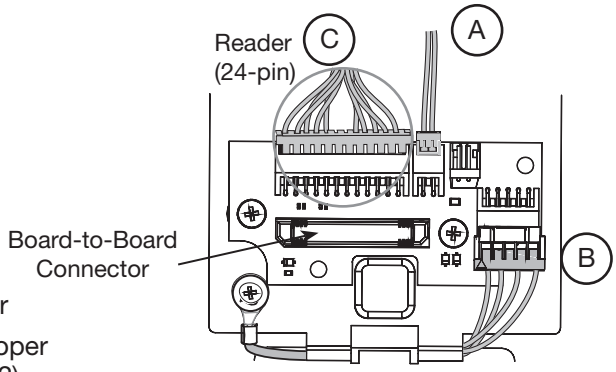

Fig. 3B

Secure Mounting Plate

- Tuck excess cable into wire hole on inside of door
- Secure the mounting assembly while ensuring proper alignment of outside reader and fully tighten the (2) through-bolts on the inside of the door to secure the reader and plate to the door

C. Secure the 24-pin card reader connector (Fig. 3B)

D. Ensure all openings on back of secured connectors are covered completely with grease (Fig. 3C).

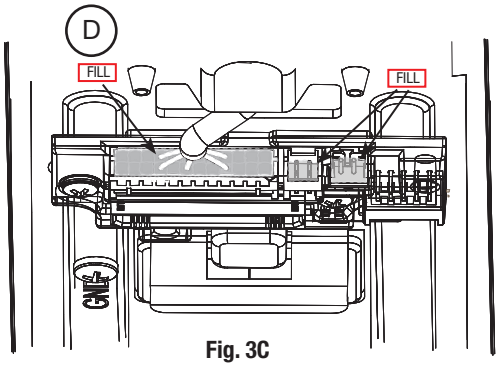

Fig. 3C

Copyright © 2016, 2019, 2021, Sargent Manufacturing Company, an ASSA ABLOY Group company. All rights reserved.
Reproductions in whole or in part without express written permission of Sargent Manufacturing Company is prohibited.

3 Installation of Connectors (Continued)

Important Note: If you are installing IN220 (PoE)*:

E. Pull 5 1/2 inches of Ethernet cable from hole. Strip cable jacket back 3 1/2 inches.

F. Separate (untwist) and straighten (8) Ethernet wires before carefully feeding through ferrite bead (Fig. 3D).

G. Crimp RJ45 (male) connector on end of wires.

*For more detail, refer to section (7) 'Installation Wiring', "A - Frame Harness Installation".

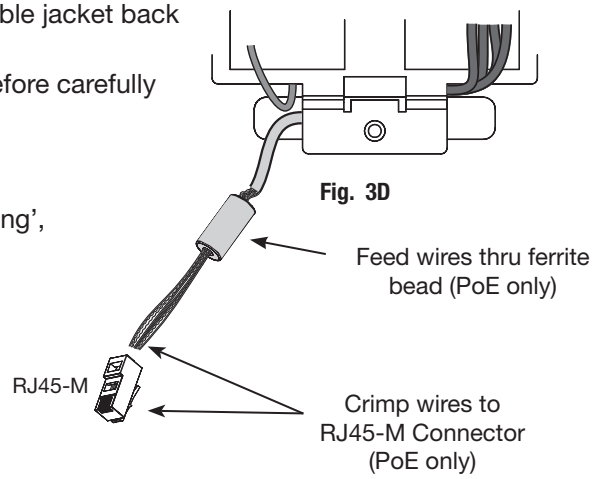

Fig. 3D

4 Installing the Controller

Important Note: Before you install the controller

Apply dielectric grease to connector* located on back of Controller (FIG. 4B, C).

CAUTION - Do not allow debris to enter connector contacts.

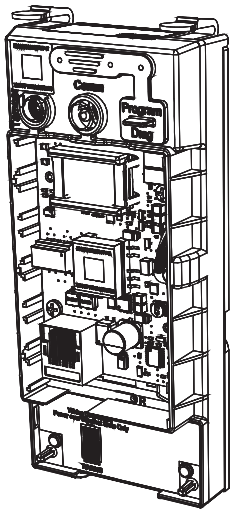

Fig. 4A

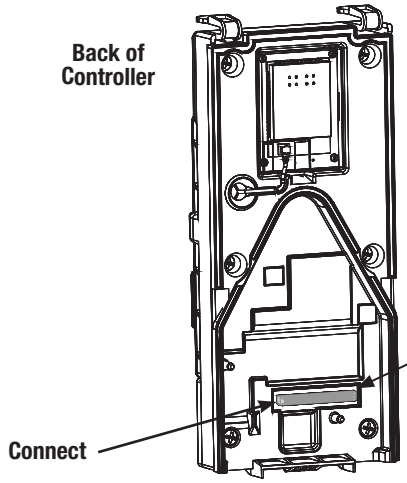

Fig. 4B

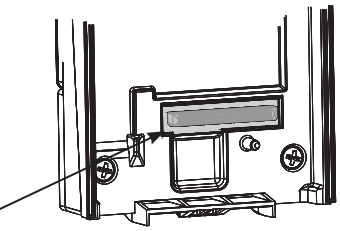

Fig. 4C

Copyright © 2016, 2019, 2021, Sargent Manufacturing Company, an ASSA ABLOY Group company. All rights reserved.
Reproductions in whole or in part without express written permission of Sargent Manufacturing Company is prohibited.

SARGENT
ASSA ABLOY

4 Installing the Controller (Continued)

1. Insert bottom tab of controller (ensure a clear path) into slot on mounting plate (Fig. 4D, E).
2. Ensure proper alignment of board-to-board connectors (Fig. 4E) while pivoting controller toward door until two tabs on top snap securely into place on mounting plate (Fig. 4D).

CAUTION: To avoid possible damage to board-to-board connectors, care should be taken when securing controller to mounting plate. If there is resistance when securing, detach controller to determine cause before re-attaching controller.

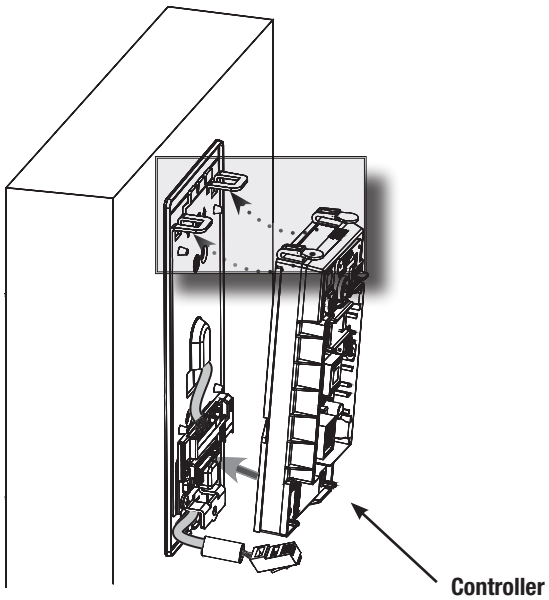

Fig. 4D

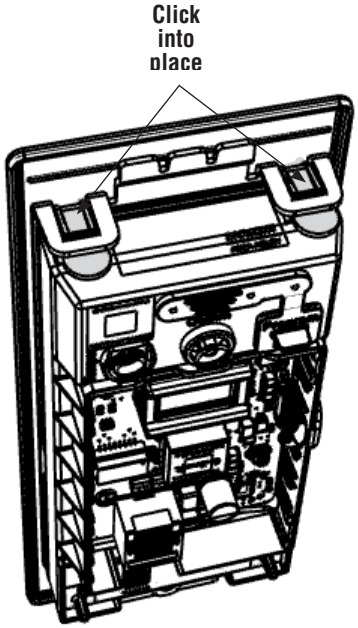

Fig. 4E

5 Supplying Power to the Controller

Important - before inserting PoE plug into PoE connector, apply dielectric grease to top of plug, covering the pin area (Fig. 5A).

A. IN220 (PoE)

1. Once controller is securely in place, connect RJ45 male connector to female RJ45 port on controller board (Fig. 5A).
2. If power is enabled, LED will flash and lock motor will cycle.

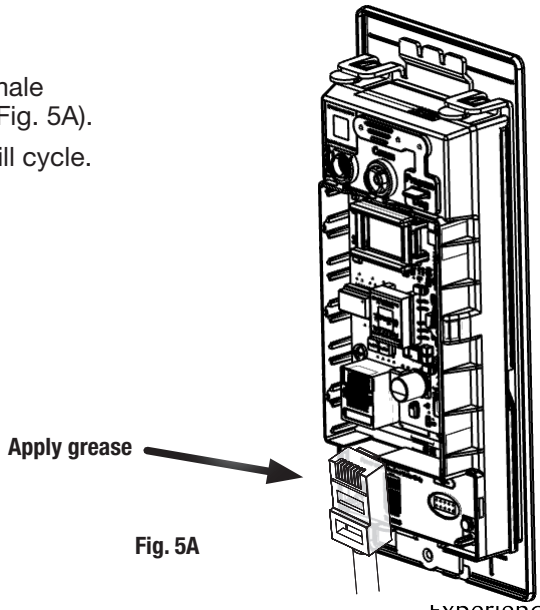

Fig. 5A

Copyright © 2016, 2019, 2021, Sargent Manufacturing Company, an ASSA ABLOY Group company. All rights reserved.
Reproductions in whole or in part without express written permission of Sargent Manufacturing Company is prohibited.