PowerScan™
BC9600 & BC9620 Base Stations

QUICK REFERENCE GUIDE

Industrial Base Station/Charger
for PowerScan 9600 Family Bar Code Readers

DATALOGIC

Datalogic S.r.l.
Via S. Vitalino, 13
40012 Calderara di Reno (BO)
Italia
Telefono: +39 051 3147011
Fax: +39 051 3147205

©2022-2023 Datalogic S.p.A. and /or its affiliates.

All rights reserved. Without limiting the rights under copyright, no part of this documentation may be reproduced, stored in or introduced into a retrieval system, or transmitted in any form or by any means, or for any purpose, without the express written permission of Datalogic S.p.A. and/or its affiliates.

Owners of Datalogic products are hereby granted a non-exclusive, revocable license to reproduce and transmit this documentation for the purchaser's own internal business purposes. Purchaser shall not remove or alter any proprietary notices, including copyright notices, contained in this documentation and shall ensure that all notices appear on any reproductions of the documentation.

Electronic versions of this document may be downloaded from the Datalogic website (www.datalogic.com). If you visit our website and would like to make comments or suggestions about this or other Datalogic publications, please let us know via the "Contact" page.

Disclaimer

Datalogic has taken reasonable measures to provide information in this manual that is complete and accurate, however, Datalogic shall not be liable for technical or editorial errors or omissions contained herein, nor for incidental or consequential damages resulting from the use of this material. Datalogic reserves the right to change any specification at any time without prior notice.

Trademarks

Datalogic and the Datalogic logo are registered trademarks of Datalogic S.p.A. in many countries, including the U.S.A. and the E.U.

PowerScan is a trademark of Datalogic S.p.A. and/or its affiliates, registered in the U.S. All other trademarks and brands are property their respective owners.

Patents

See www.patents.datalogic.com for patent list.

See the Regulatory Addendum included with your product for additional regulatory, safety and legal information.

TABLE OF CONTENTS

END USER SOFTWARE LICENSE AGREEMENT ..... **IV**
Software Product Policy VII
Using the BC9600 Base Station **1**
Base Station Models **2**
Base Station Models 2
Connection Module Models 2
Installation **3**
Package Contents **3**
Mounting Instructions **4**
Permanent Mounting **4**
Wall Mounting **5**
Changing the Orientation of the Positioning Tab: 5
Portable Desktop Mounting **6**
Base Station Fast Release - Mounting the Plate 6
Connection Module Fast Release - Mounting the Bracket (not valid for BC9620 models) 8
System Connections **11**
BC9681 Power Over Ethernet (PoE) Connection 15
BC9681 External Power Connection 15
BC9680/BC9681 Power Over Ethernet (PoE) Connection 16
Connecting and Disconnecting the Cables 17
Connecting BC9630 cables 17
Disconnecting BC9630 cables 17
Connecting BC9620 cables 19
Disconnecting BC9620 cables 19
Connecting BC9631 multi-interface cable 20
Connecting BC9680 cables 21
Connecting BC9681 cables 21
Configuration **22**
BC968X Ethernet Models 22
Non-Ethernet Models 22
Datalogic Aladdin™ 22
Serial Configuration 22
Configuration Bar Codes 22
Technical Specifications **23**
Technical Support **24**
Support Through the Website 24
Reseller Technical Support 24
Warranty **25**

END USER SOFTWARE LICENSE AGREEMENT

(EULA) FOR THE POWERSCAN™ PM/PBT9600 PRODUCT SERIES

NOTICE TO END USER: BY DOWNLOADING OR INSTALLING THE SOFTWARE, OR BY USING THE DATALOGIC PRODUCT THAT INCLUDES THIS SOFTWARE, THE END USER CONSENTS TO BE BOUND BY THIS AGREEMENT. IF THE END USER DOES NOT AGREE WITH ALL OF THE TERMS OF THIS AGREEMENT, THEN DATALOGIC IS NOT WILLING TO LICENSE THE SOFTWARE AND THE END USER IS NOT ALLOWED TO DOWNLOAD, INSTALL OR USE THE SOFTWARE OR THE DATALOGIC PRODUCT---

This End User License Agreement ("EULA") is between Datalogic IP Tech S.r.l. having its registered office at Via San Vitalino 13, 40012 Calderara di Reno (Bologna), Italy ("Datalogic"), and you, either an individual or a single entity, ("End User or "You"") who has purchased one or more PowerScan™ PBT/PM9600 ("Datalogic Product") subject to the terms and conditions provided in any relevant purchase or sale contract. This EULA applies to the software contained in the Datalogic Product ("Embedded Software") and to any other software, to the extent applicable, offered as optional application software ("Application Software" that together with "Embedded Software" is herein referred to as "Software"). Any Open Source used in a conjunction with the Software is subject to the Open Source licenses available at the following website: http://www.datalogic.com/oss

1. Grant of License

1.1 Datalogic grants to End User, a personal, non-exclusive, non-transferable, non sub licensable, revocable, limited license to use the Software, solely on the Datalogic Product in which it is embedded or for which it is intended for use, in machine-readable form only, solely for End User's internal business purposes.

1.2 End Users shall not distribute, sublicense, rent, loan, lease, assign, export, re-export, resell, ship or divert or cause to be exported, re-exported, resold, shipped or diverted, directly or indirectly, the Software under this Agreement. End User shall not, and shall not permit others to: (i) modify, translate, decompile, reverse engineer, disassemble, or extract the inner workings of the Software, (ii) copy the functionality of the Datalogic Products; (iii) remove any proprietary notices, marks, labels, or logos from the Datalogic Products; (iv) rent or transfer all or some of the Software to any other party without Datalogic's prior written consent.

1.3. Title to the licensed Software shall be and remain with Datalogic or the third party from whom Datalogic has obtained a license right. This Agreement does not grant to End User any intellectual property rights. As used in this Agreement the term "purchase" or its equivalent when applied to the Software shall mean "acquire under license". End User is not entitled to receipt or use of the source code of any licensed Software.

1.4 Portions of the Datalogic Product are protected by the relevant and applicable patent and copyright laws, international treaty provisions, and other applicable laws. Therefore, End User must treat the Datalogic Product like any other copyrighted material (e.g., a book or musical recording) except that End User may make one copy of the Software solely for back-up purposes. Unauthorized duplication of the Software constitutes copyright infringement.

1.5 Any use of the Software outside of the conditions set forth herein is strictly prohibited and will be deemed a breach of this Agreement resulting in immediate termination of this Agreement. In the event of a breach of this Agreement, Datalogic will be entitled to all available remedies at law or in equity (including but not limiting to immediate termination of the license without notice, immediate injunctive relief and repossession of all Datalogic Products).

1.6 Without prejudice of the foregoing, End User grants to Datalogic and its independent accountants or consultants the right to examine End User's books, records and accounts during End User's normal business hours to verify compliance with this Agreement. In the event such audit discloses non-compliance with this Agreement, Datalogic shall be entitled to immediately terminate the Agreement, request End User to promptly pay all (additional) license fees due and any further damages, if any.

2. License Fee

License fees shall be due by End User to Datalogic according to the terms provided for in the relevant contract for the purchase of the Datalogic Product.

3. Termination

Without prejudice to any other rights or remedies Datalogic may have, Datalogic may terminate this Agreement if End User fails to comply with the terms and conditions of this Agreement. Datalogic may terminate this Agreement by offering you a superseding Agreement for the Software or any replacement or modified version of or upgrade to the Software and conditioning your continued use

of the Software or such replacement, modified or upgraded version on your acceptance of such superseding Agreement. In addition, either party may terminate this Agreement at any time. Subject to the foregoing, termination shall be effective upon notice to the other party. In the event that this Agreement terminates for any reason, End User's license to use the Software will immediately terminate, and End User must immediately stop using the Software, destroy all copies of the Software and all of its component parts, and, upon request, provide an affidavit certifying your compliance with the foregoing. The provisions of Sub-sections 1.2, 1.3, 1.4, 1.5, 4, 5, 6, 8, and 12 shall survive termination of this Agreement.

4. Limited Warranty

Datalogic warrants that, under normal use and operation, the Software will conform substantially to the applicable Datalogic Product documentation for the period specified in the same, provided that the Software is used with the Datalogic Product. Datalogic's entire liability and End User's sole and exclusive remedy for any breach of the foregoing limited warranty will be, at Datalogic's option, the provision of a downloadable patch or replacement software.

Datalogic does not warrant (i) that Software will meet End User's requirements; (ii) that Software will be uninterrupted or defect error free; (iii) any non conformity derived from unauthorized use, and/or improper installation or repair not in compliance with Datalogic Product documentation. End User agrees that the existence of such non conformities or errors and Datalogic's inability to remedy such errors shall not constitute a breach of this Agreement.

EXCEPT AS PROVIDED IN THIS AGREEMENT, THE DATALOGIC PRODUCT IS PROVIDED "AS IS" AND DATALOGIC MAKES NO WARRANTIES OF ANY KIND, EXPRESS OR IMPLIED, WRITTEN OR ORAL, WITH RESPECT TO THE DATALOGIC PRODUCT OR SOFTWARE, AND SPECIFICALLY DISCLAIMS THE IMPLIED WARRANTIES OF MERCHANTABILITY AND FITNESS FOR A PARTICULAR PURPOSE.

5. Limitation of Liability

EXCEPT AS PROVIDED IN THIS AGREEMENT, NEITHER DATALOGIC NOR ITS LICENSORS SHALL BE LIABLE FOR ANY CLAIMS AGAINST END USER BY ANY OTHER PARTY. IN NO EVENT SHALL DATALOGIC'S LIABILITY FOR DAMAGES, IF ANY, WHETHER BASED UPON CONTRACT, TORT (INCLUDING NEGLIGENCE), PRODUCT LIABILITY, STRICT LIABILITY, WARRANTY, OR ANY OTHER BASIS, EXCEED THE PRICE OR FEE PAID BY END USER FOR THE DATALOGIC PRODUCT. UNDER NO CIRCUMSTANCES SHALL DATALOGIC OR ITS LICENSORS BE LIABLE TO END USER OR ANY THIRD PARTY FOR LOST PROFITS, LOST DATA, INTERRUPTION OF BUSINESS OR SERVICE, OR FOR ANY OTHER SPECIAL, CONSEQUENTIAL, CONTINGENT, INDIRECT, INCIDENTAL, PUNITIVE, EXEMPLARY, OR OTHER SIMILAR DAMAGES, EVEN IF DATALOGIC OR ITS LICENSORS HAVE BEEN ADVISED OF THE POSSIBILITY OF SUCH DAMAGES. END USER MUST BRING ANY ACTION UNDER THIS AGREEMENT WITHIN 12 (TWELVE) MONTHS AFTER THE CAUSE OF ACTION ARISES.

6. Indemnification

To the maximum extent permitted by law, End User agrees to defend, indemnify and hold harmless Datalogic, its affiliates and their respective directors, officers, employees and agents from and against any and all claims, actions, suits or proceedings, as well as any and all losses, liabilities, damages, costs and expenses (including reasonable attorney's fees) arising out of or accruing from or related to Licensee's failure to comply with the terms of this Agreement, including but not limited to (1) non compliance with any applicable laws or regulations with Datalogic product documentation, (2) unauthorized use or disclosure of Software, and (3) use of Software in combination with software, hardware, systems, or other items not provided by Datalogic.

7. Support

End User may request support for Software from Datalogic at Datalogic's standard support fees and under Datalogic's standard support terms and conditions in effect at the time the support is requested.

8. Government Restricted Rights; International Use

8.1 Use, duplication, or disclosure of the Software by the U.S. Government is subject to the restrictions for computer software developed at private expense as set forth in the U.S. Federal Acquisition Regulations at FAR 52.227-14(g), or 52.227-19 or in the Rights in Technical Data and Computer Software clause at DFARS 252.227-7013(c)(1)(ii), whichever is applicable.

8.2 If End User is using the Datalogic Product outside of the United States, End User must comply with the applicable local laws of the country in which the Datalogic Product is used and with U.S. export control laws,. Without prejudice of the foregoing, the End User agrees to not export or re-export the Software, any part thereof, or any process or service that is the direct product of the Software to any country, person or entity subject to U.S. export restrictions.

End User specifically agrees not to export or re-export any of the Software: (i) to any country to which the U.S. has embargoed or restricted the export of goods or services or to any national of any such country, wherever located, who intends to transmit or transport the Software back to such country; (ii) to any person or entity who you know or have reason to know will utilize the Software in the design, development or production of nuclear, chemical or biological weapons; or (iii) to any person or entity who has been prohibited from participating in U.S. export transactions by any federal agency of the U.S. government. End User warrants and represents that neither the U.S. Commerce Department, Bureau of Export Administration nor any other U.S. federal agency has suspended, revoked or denied its export privileges.

9. Third Party Software

The Datalogic Product may contain one or more items of third party software which use is governed by separate third party license, unless otherwise stated.

10. Open Source Software

Portions of the Software include or operate with Open Source software ("Open Source Software").

Open Source Software is software covered by a publicly available license governed solely under Copyright law, whereas the complete terms and obligations of such license attach to a licensee solely through the act of copying, using and/or distributing the licensed software, such obligations often include one or more of attribution obligations, distribution obligations, copyleft obligations, and intellectual property encumbrances. The use of any Open Source Software is subject to the terms and conditions of this Agreement as well as the terms and conditions of the corresponding license of each Open Source Software package. If there is a conflict between the terms and conditions of this Agreement and the terms and conditions of the Open Source Software license, the applicable Open Source Software license will take precedence. Datalogic is required to reproduce the software licenses, acknowledgments and copyright notices as provided by the authors and owners, thus, all such information is provided in its native language form, without modification or translation. Please reference and review the above mentioned information to identify which Open Source Software packages have source code provided or available.

11. Notices

All notices required or authorized under this Agreement shall be given in writing, and shall be effective when received, with evidence of receipt. Notices to Datalogic shall be sent to the attention of Datalogic IP Tech S.r.l., Legal & IP Department, Via San Vitalino 13, 40012 Calderara di Reno (Bologna), Italy, or such other address as may be specified by Datalogic in writing.

12. General Provisions.

12.1. Entire Agreement; Amendment. This document contains the entire agreement between the parties relating to use of the Datalogic Products and the licensing of the Software and supersedes all prior or contemporaneous agreements, written or oral, between the parties concerning the use of the Datalogic Products and licensing of the Software. This Agreement may not be changed, amended, or modified except by written document signed by Datalogic.

12.2. Waiver. A party's failure to enforce any of the terms and conditions of this Agreement shall not prevent the party's later enforcement of such terms and conditions.

12.3. Governing Law; Venue: End User agrees to the application of the laws of the country in which End User obtained the license to govern, interpret, and enforce all of End User's and Datalogic's respective rights, duties, and obligations arising from, or relating in any manner to, the subject matter of this Agreement, without regard to conflict of law principles. The United Nations Convention on Contracts for the International Sale of Goods does not apply.

All rights, duties, and obligations are subject to the courts of the country in which End User obtained the license. For licenses granted by Licensee who operates in the countries specified below, the following terms applies.

For Americas:

This Agreement is governed by the laws of the State of Oregon. This Agreement and the rights of the parties hereunder shall be governed by and construed in accordance with the laws of the State of Oregon U.S.A, without regard to the rules governing conflicts of law. The state or federal courts of the State of Oregon located in either Multnomah or Lane counties shall have exclusive jurisdiction over all matters regarding this Agreement, except that Datalogic shall have the right, at its absolute discretion, to initiate proceedings in the courts of any other state, country, or territory in which End User resides, or in which any of End User's assets are located. In the event an action is brought to

enforce the terms and conditions of this Agreement, the prevailing party shall be entitled to reasonable attorneys' fees, both at trial and on appeal.

For Europe, Middle East and Africa:

This Agreement is governed by the laws of Italy. This Agreement and the rights of the parties hereunder shall be governed by and construed in accordance with the laws of Italy, without regard to the rules governing conflicts of law. Italian Court of Bologna shall have exclusive jurisdiction over all matters regarding this Agreement, except that Datalogic shall have the right, at its absolute discretion, to initiate proceedings in the courts of any other state, country, or territory in which End User resides, or in which any of End User's assets are located. In the event an action is brought to enforce the terms and conditions of this Agreement, the prevailing party shall be entitled to reasonable attorneys' fees, both at trial and on appeal.

For Asia- Pacific Countries:

The validity, interpretation and construction of the Agreement shall be governed by and construed in accordance with Laws of the Republic of Singapore. Parties expressly disclaim the application of the United Nations Convention for International Sale of Goods.

Any dispute arising out of or in connection with this contract, including any question regarding its existence, validity or termination, shall be referred to and finally resolved by arbitration administered by the Singapore International Arbitration Centre ("SIAC") in accordance with the Arbitration Rules of the Singapore International Arbitration Centre ("SIAC Rules") for the time being in force, which rules are deemed to be incorporated by reference in this clause. The seat of the arbitration shall be Singapore.

The number of arbitrators will be three, with each side to the dispute being entitled to appoint one arbitrator. The two arbitrators appointed by the parties will appoint a third arbitrator who will act as chairman of the proceedings. Vacancies in the post of chairman will be filled by the president of the SIAC. Other vacancies will be filled by the respective nominating party. Proceedings will continue from the stage they were at when the vacancy occurred. If one of the parties refuses or otherwise fails to appoint an arbitrator within 30 days of the date the other party appoints its, the first appointed arbitrator will be the sole arbitrator, provided that the arbitrator was validly and properly appointed. All proceedings will be conducted, including all documents presented in such proceedings, in the English language. The English language version of these terms and conditions prevails over any other language version.

12.4. Attorneys' Fees. In the event an action is brought to enforce the terms and conditions of this Agreement, the prevailing party shall be entitled to reasonable attorneys' fees, both at trial and on appeal.

– END –

Software Product Policy

Datalogic reserves the right to ship its products with the latest version of software/firmware available. This provides our customers with the very latest in Datalogic software technology.

The only exception to this policy is when the buyer has a signed contract with Datalogic that clearly defines the terms and conditions for making software/firmware changes in products shipped to the buyer.

To arrange for a Software Maintenance and Support Agreement please contact your Datalogic sales person.

NOTES

POWERSCAN™ BC9600 BASE STATIONS

USING THE BC9600 BASE STATION

The BC9600 base station, when paired with one or more PowerScan™ PM/PBT9600 readers, builds a Cordless Reading System for the collection, decoding and transmission of bar code data. It can be connected to a Host PC via RS232, USB, USB Type C or Ethernet, depending on the interchangeable connection module.

With the adoption of the Wireless Power Transfer technology, the base station can charge the battery of the gun without contacts, with a performance depending on the power supply type used.

The label on the base station has LED indicators and a touch button. Touch the button for 2 seconds and all properly configured and switched on scanners (with battery profile different from Max Autonomy) that are linked to that base station and within the radio range coverage, will emit a beep and blink within 5 seconds. This feature is useful to:

- verify which scanners are linked to a particular base station;
- detect a scanner forgotten somewhere.

The LEDs signal the BC9600 status, as explained below.

LED	STATUS	
Green LED	Solid green: the base station is powered. Blinking: the base station is receiving data	
Lateral Light Bands	Indicates the state of the battery charge. Orange slow blinking: battery level is under 50%, the reader is charging. Green slow blinking: battery level is over 50%, the reader is charging. Solid Green: the battery of the reader is fully charged.	
Ethernet (Ethernet models only)	- BF LED (red/green): network status; - LINK LED (yellow/green): link activity; - SF LED (red/green): module status; - PWR LED (green): power ON (located on the connection module this LED is not visible when installed in the cradle).	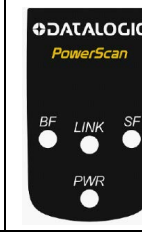

BASE STATION MODELS

Each base station is composed of a cradle which must be connected to a connection module, depending on the interface desired and on the IP (water and dust) protection grade.

The base station and connection module models are listed below.

Base Station Models

BC9600-433	BASE/CHARGER 433MHZ w/o conn. module
BC9600-910	BASE/CHARGER 910MHZ w/o conn. module
BC9630-433	BASE/CHARGER 433MHZ M-INT
BC9630-910	BASE/CHARGER 910MHZ M-INT
BC9631-433	BASE/CHARGER 433MHZ M-INT IP65
BC9631-910	BASE/CHARGER 910MHZ M-INT IP65
BC9680-433	BASE/CHARGER 433MHZ ETH/PROFINET
BC9680-910	BASE/CHARGER 910MHZ ETH/PROFINET
BC9681-433-N100	BASE/CHARGER 433 ETH/PROFINET IP65
BC9681-433-N200	BASE/CHARGER 433 ETH/ETH IP IP65
BC9681-910-N100	BASE/CHARGER 910 ETH/PROFINET IP65
BC9681-910-N200	BASE/CHARGER 910 ETH/ETH IP IP65
BC9600-BT	BASE/CHARGER BT NO-INT w/o conn. module
BC9630-BT	BASE/CHARGER BT M-INT
BC9631-BT	BASE/CHARGER BT M-INT IP65
BC9680-BT	BASE/CHARGER BT ETH/PROFINET
BC9681-BT-N100	BASE/CHARGER BT ETH/PROFINET IP65
BC9681-BT-N200	BASE/CHARGER BT ETH/ETH IP IP65
BC9620-430	BC9620 BASE/CHARGER 433MHZ USB ONLY
BC9620-910	BC9620 BASE/CHARGER 910MHZ USB ONLY
BC9620-BT	BC9620 BASE/CHARGER BT USB ONLY

Connection Module Models

CM9630	CONN MOD M-INT
CM9631	CONN MOD M-INT IP65
CM9680	CONN MOD ETH/PROFINET
CM9681-N100	CONN MOD ETH/PROFINET IP65
CM9681-N200	CONN MOD ETH/ETH IP IP65

INSTALLATION

To set up your BC9600 base station you must:

1. Physically install it.
2. Make all system connections.
3. Configure it.

PACKAGE CONTENTS

The base station package contains the following items:

- BC9600 Base Station (with Desktop Positioning Tab installed)
- 1 Mounting plate

MOUNTING INSTRUCTIONS

The base station can be either set on or mounted to a flat surface for desktop usage, or affixed vertically to a wall.

Depending on the model, the appropriate connection module is already installed.

PERMANENT MOUNTING

For either desktop or wall mounting, the base station can be fastened directly to a flat surface using screws (not included).

NOTE: When the base station is mounted on vertical surfaces, permanent mounting is always required.

NOTE: For vertical installation, do not exceed two meters in height.

NOTE: When mounting on drywall, the base station should be screwed to a wall stud or supporting beam for additional support.

BC9630 **BC9620**

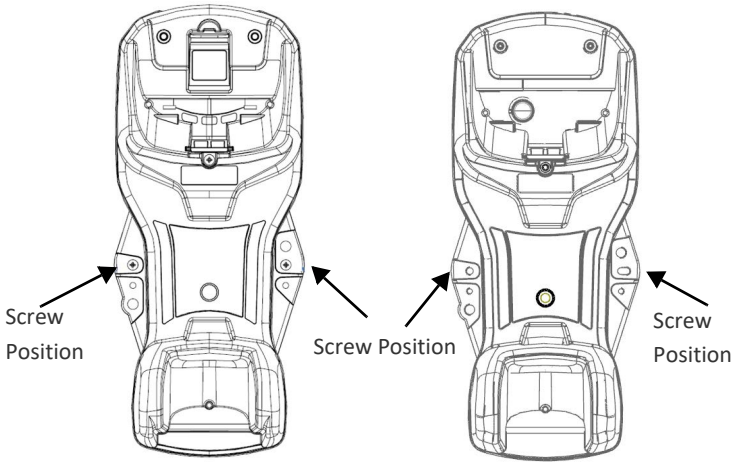

WALL MOUNTING

The base station contains a reversible positioning tab for horizontal or vertical mounting.

Figure 1 - Positioning Tab

Desktop Positioning Tab (Horizontal)

Wall Positioning Tab (Vertical)

When shipped, the base station has the positioning tab installed in the Desktop position (horizontal). For vertical installation, the positioning tab must be rotated.

Changing the Orientation of the Positioning Tab:

1. Remove the screw holding the tab in place. Keep the screw for reuse.

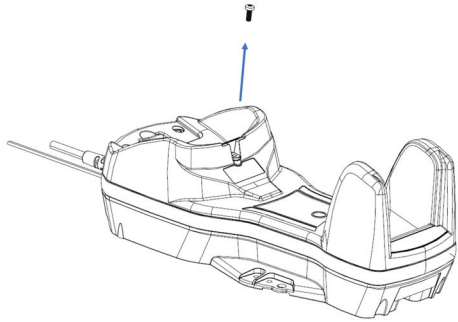

2. Carefully lift the tab out.

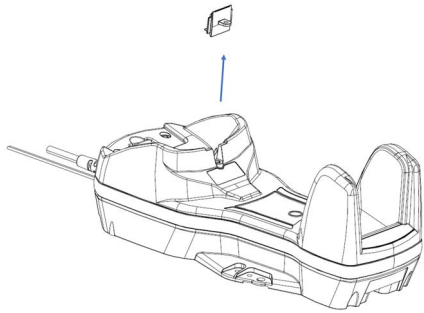

3. Rotate the tab until you will see "WALL" tooth, put the rotated tab into place and secure it with the screw.

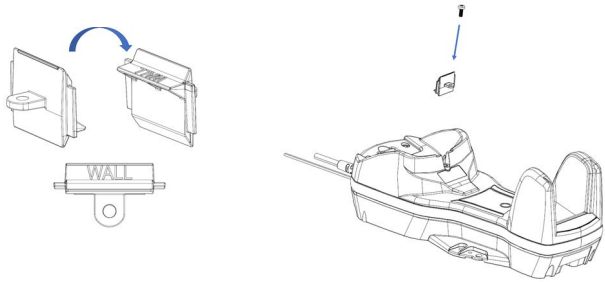

PORTABLE DESKTOP MOUNTING

For desktop mounting, if portability of the base station is required, the mounting plate can be used. There are two ways this can be done: (1) **base station fast release** by first fixing the mounting plate onto a flat surface so the base station can be slid off and on, or (2) **connection module fast release** by fixing the mounting plate to the connection module and then fixing both of them onto a flat surface so only the cradle can be slid off while the connection module will remain on the desk.

Base Station Fast Release - Mounting the Plate

1. Affix the mounting plate onto the desired mounting surface using four screws through the holes highlighted in the figure below.

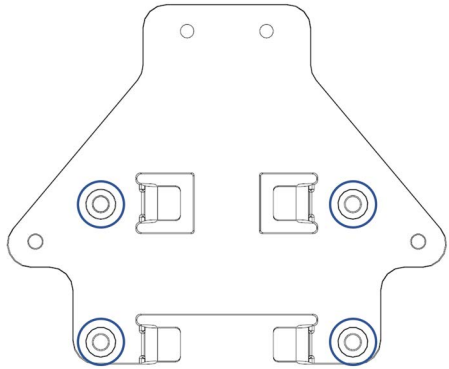

2. Remove the adhesive strips protecting the mounting tabs on the base station.

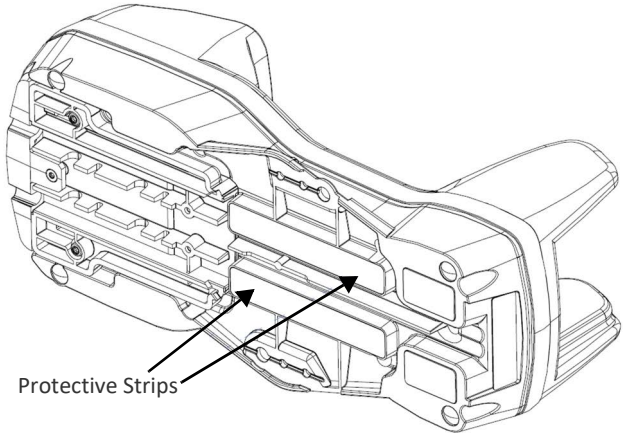

3. Align the base station with the mounting plate until you see the sphere inside the bigger hole on the left.

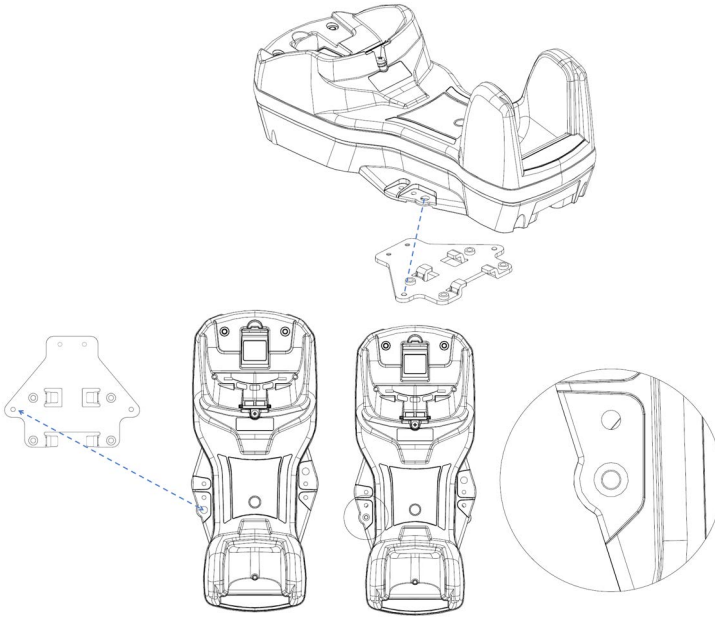

4. Move the base station down until the sphere is aligned with the smaller hole.

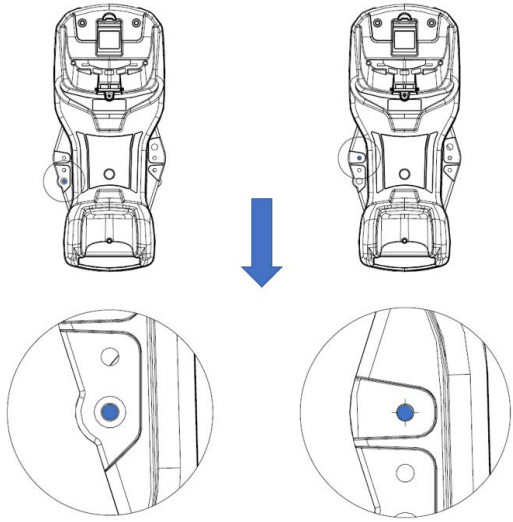

Connection Module Fast Release - Mounting the Bracket (not valid for BC9620 models)

1. Remove the protective strips.
2. Unscrew the connection module from the base station.
3. Screw the mounting plate to the connection module.

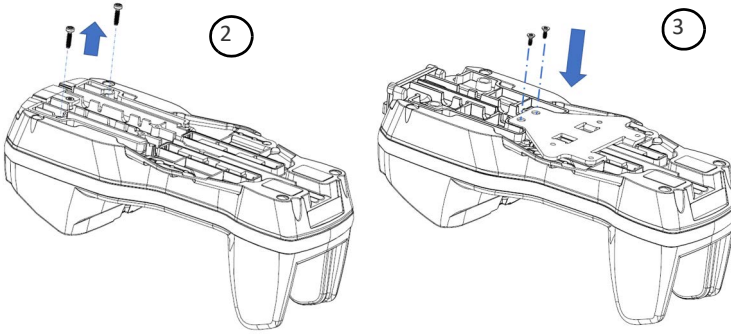

4. Unlock the lever and remove the connection module from the base station.

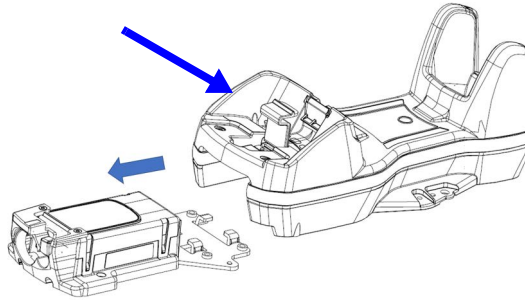

5. Screw the connection module and mounting plate sub-assembly to a flat surface using four screws as shown in the figure below.

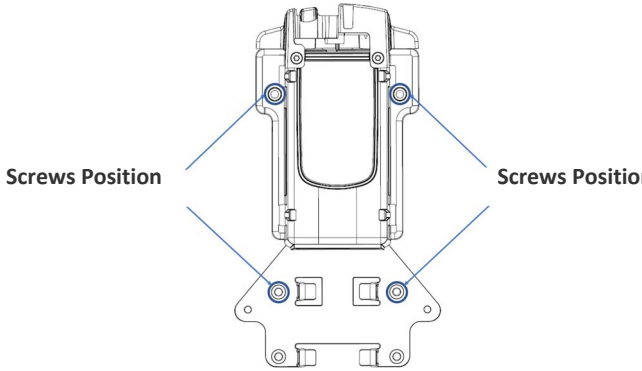

6. With the lever still unlocked, align the base station with the connection module until you see the sphere inside the bigger hole on the right.

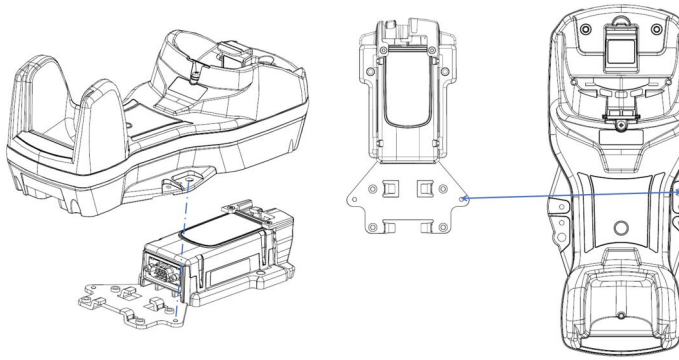

7. Move the base station up until the sphere is aligned with the smaller hole, then lock the lever to secure the connection module.

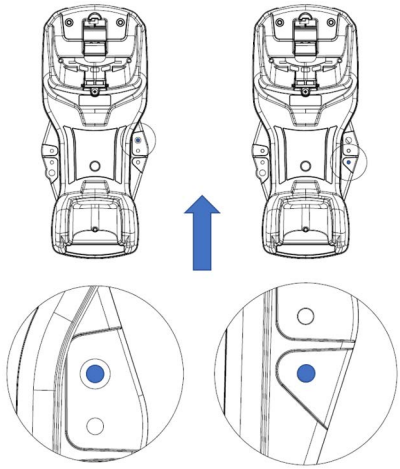

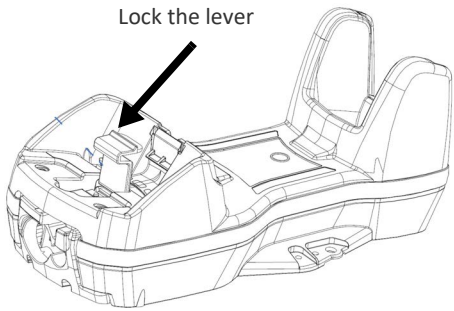

SYSTEM CONNECTIONS

CAUTION: Connections should always be made with power off.

The BC9620 and BC9630 (BC9600 + CM9630 connection module) provide a multi-interface connector (BC9630) / USB cable (BC9620) for connections to a host and a power supply connector for an external power supply.

To unlock the USB cable of BC9620, push the button shown in the picture and extract the cable.

To unlock the multi-interface cable of BC9630, first lift the lever and then extract the cable, as indicated by the label next to the lever.

Figure 2 - BC9620 connection module

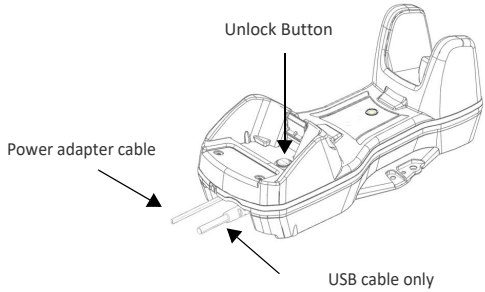

Figure 3 - BC9630 connection module

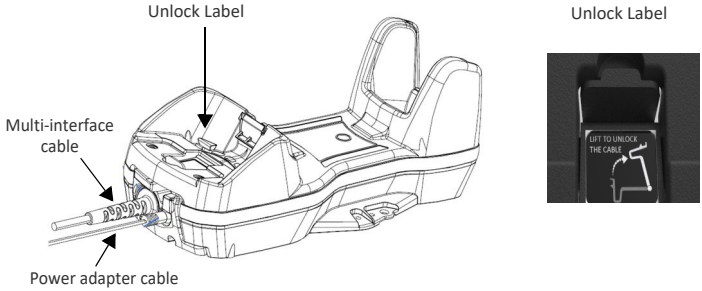

The BC9631 (BC9600 + CM9631 connection module) provides a single multi-interface connector. Power is supplied by the host (USB) or by an external power supply connected to the cable.

Figure 4 - BC9631 connection module

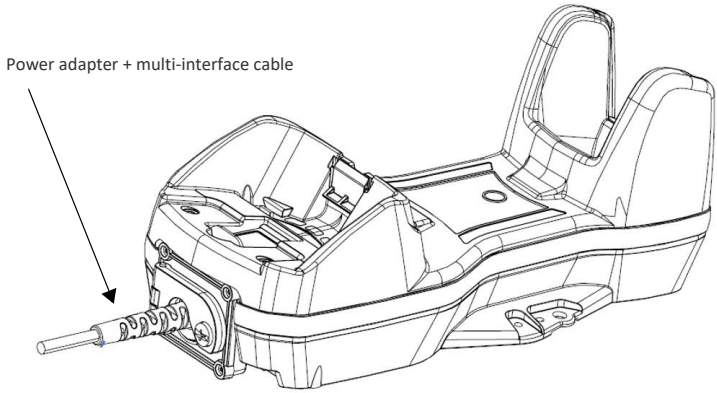

RS232

BC9630 only

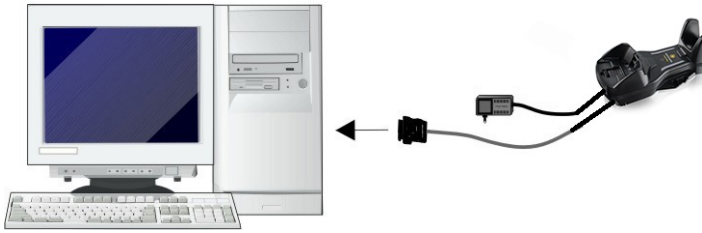

BC9631 only

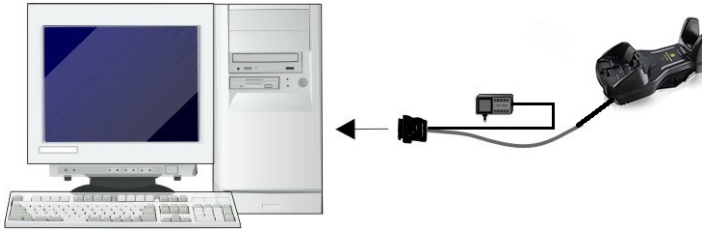

USB

The power supply is optional, the base station can be powered by the USB port. In this case, the full charging of an empty battery will take about 16 hours with an approved USB cable (type A) and 6.5 hours with an approved USB cable (type C) at ambient temperature. For intense usage and/or when the system is shut down during the night, the use of an external power supply is recommended.

BC9620/BC9630

BC9620/BC9631

ETHERNET

BC9680

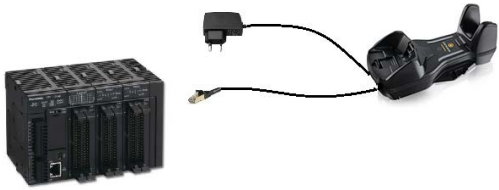

BC9681
POE connection

BC9681
External Power Supply

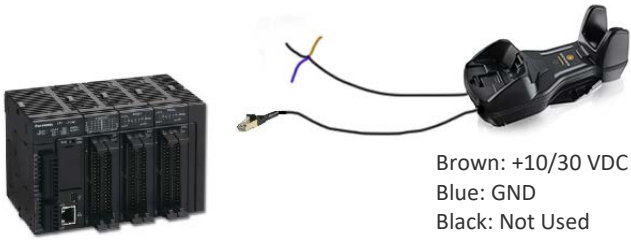

Brown: +10/30 VDC
Blue: GND
Black: Not Used

NOTE: When using the BC9680/BC9681 cradles, apply the ferrite provided with the device to the Ethernet cable 5 cm from the cradle. See the example below.

Figure 5 - How to mount a ferrite

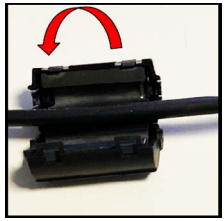

BC9681 Power Over Ethernet (PoE) Connection

PIN	NAME	DESCRIPTION	
1	TX+	Transmit Data +	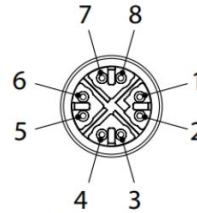
2	TX-	Transmit Data -	
3	RX+	Receive Data +	
4	RX-	Receive Data -	
5	DC1-	Dc power -	
6	DC2-	Dc power -	
7	DC1+	Dc power +	
8	DC2+	Dc power +	

M12 X-Coded Female Ethernet Network Connector

Power can be applied to any of the data pairs according to the IEE 802.3af standard for Alternative A (Mid and Endspan) or Alternative B.

BC9681 External Power Connection

DESCRIPTION	
1 - BROWN 10-30V	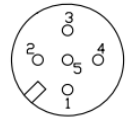
2 - NOT USED (WITH HOLE)	
3 - BLUE GND	
4 - BLACK	
5 - NOT USED (WITH HOLE)	

BC9680/BC9681 Power Over Ethernet (PoE) Connection

CABLE	PART NUMBER
PWR-IN CONNECTOR M12 5P F. A-Coded	93A050045
CABLE RS232 2M POT COIL IP67*	CAB-559
3-POLE STRAIGHT CABLE 3M	95A251290
3-POLE STRAIGHT CABLE 5M	95A251300
3-POLE STRAIGHT CABLE 7M	95A251320
3-POLE STRAIGHT CABLE 10M	95A251340
CAB-ETH-X-RJ ADAPTER FULL GETH-X to RJ45	93A050141
CAB-ETH-X-M01 M12-IP67 GETH-X CAB 1M	93A050122
CAB-ETH-X-M03 M12-IP67 GETH-X CAB 3M	93A050123

CAUTION: Use only the recommended RS232 cables. If you use a cable that is not recommended, do not connect the power supply to the cable.

CAUTION: Use only the recommended Ethernet cables or in alternative only high quality shielded cables.

Connecting and Disconnecting the Cables

Connecting BC9630 cables

Connect the multi-interface cable first, then connect the power adapter cable. Finally, power on the base station.

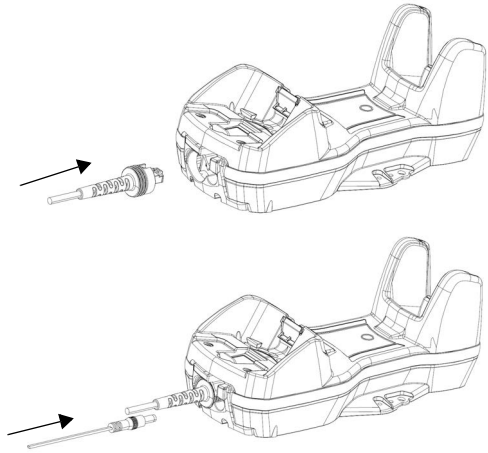

After connecting the power supply cable, secure it on the strain relief as shown in the figure below.

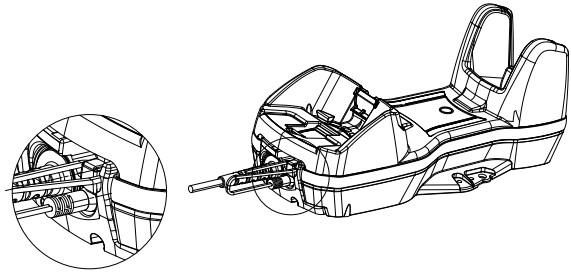

Disconnecting BC9630 cables

To disconnect the cables, power off the base station, unlock the lever and press down the cable clip using a pen or a similar tool.

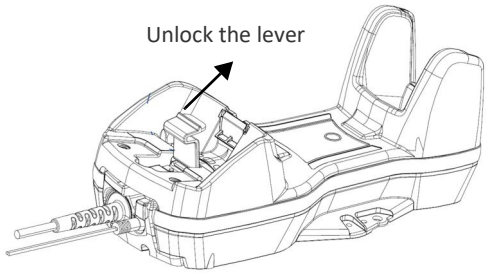

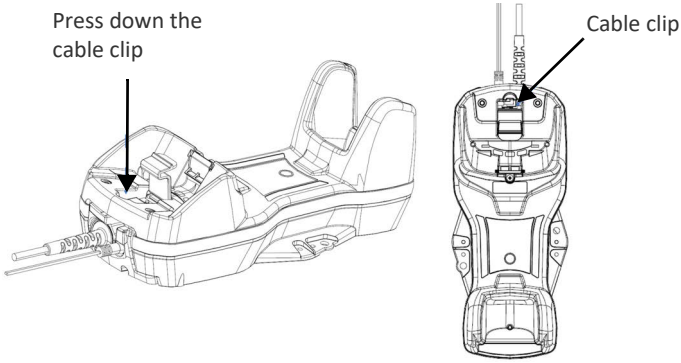

Pull out the multi-interface cable and put the lever back into lock position.

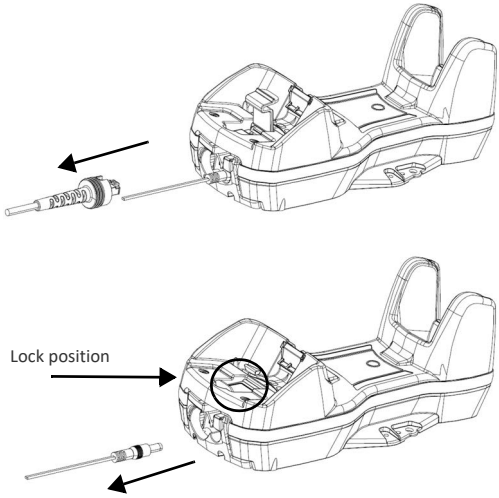

Connecting BC9620 cables

Connect the cable first, then connect the power adapter cable. The cable should click when fully inserted. Finally, power on the base station.

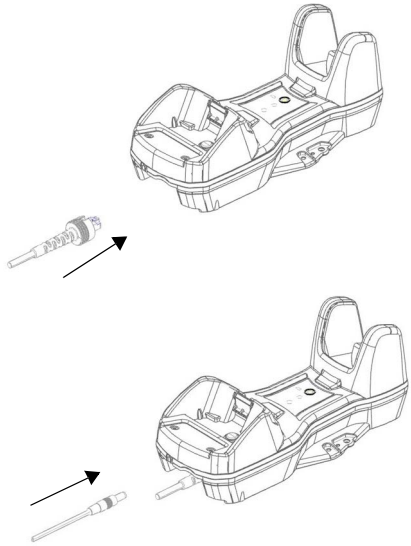

Disconnecting BC9620 cables

To disconnect the cables, power off the base station, push the button and pull out the cables.

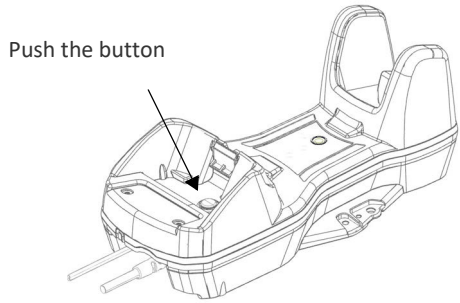

Connecting BC9631 multi-interface cable

Unscrew the no-tool screw to open the front door, connect the multi-interface cable, close the door and screw it back.

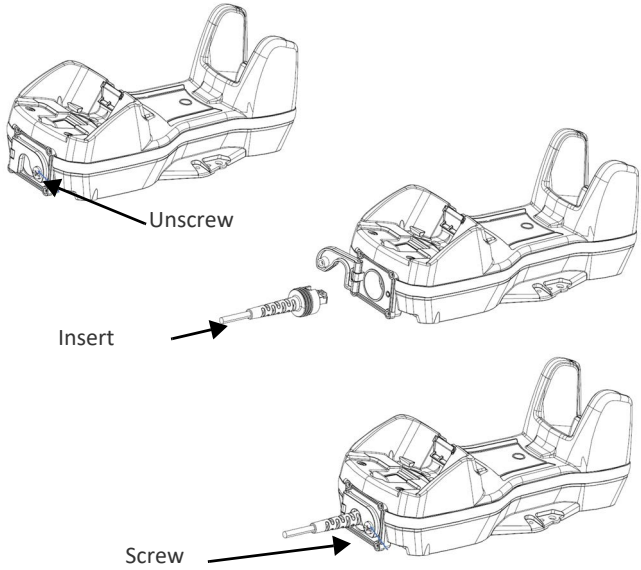

To disconnect the multi-interface cable, open the front door, pull out the cable and screw the front door back.

Connecting BC9680 cables

Connect the Ethernet cable and then connect the power adapter cable. Finally, power on the cradle and lock the power cable on the strain relief.

To disconnect the cables, first unlock the power cable and then pull it out. To disconnect the Ethernet cable, use a flat screwdriver to unlock the Ethernet clip.

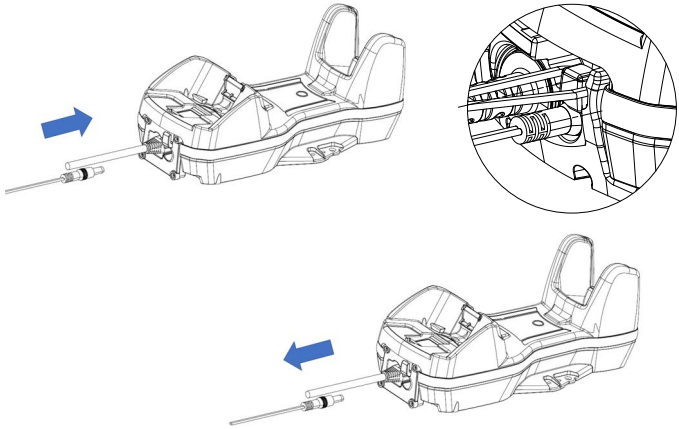

Connecting BC9681 cables

Screw the cables on the base.

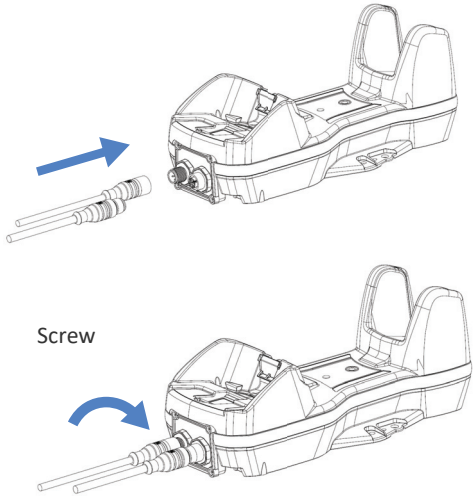

CAUTION: Do not place two base stations too close to each other as shown in the figure below. Keep at least 5cm of distance between them, in order to avoid possible interferences and malfunction of the two wireless charging systems.

CONFIGURATION

BC968X Ethernet Models

BC968x configuration can be performed using the Datalogic Aladdin software configuration program or by reading configuration bar codes with the Power-Scan™ PM9600 reader. For more details, refer to the Product Reference Guide.

Non-Ethernet Models

The BC963X configuration can be performed in three ways: by using the Datalogic Aladdin™ software configuration program, by sending configuration strings from the Host PC via the RS232 or USB-COM interface or by reading configuration bar codes with the PowerScan™ PM9600 reader.

Datalogic Aladdin™

Datalogic Aladdin™ (available for free download from the Datalogic website) is a multi-platform utility program that provides a quick and user-friendly configuration method via the RS232/USB-COM or Ethernet interface. It also allows upgrading the software of the connected device (see the Datalogic Aladdin™ Help On-Line for more details).

Serial Configuration

By connecting the BC963X to a PC through an RS232 or USB-COM interface cable, it is possible to send configuration strings from the PC to the BC963X.

Configuration Bar Codes

Link the base station and the reader using the procedures described in the Power- Scan™ PM9600 Quick Reference. Once the pairing is complete, you can configure the base station by reading the configuration bar codes in the PM9600 Quick Reference Guide or PowerScan 9600 Family Product Reference Guide.

TECHNICAL SPECIFICATIONS

The following table contains Physical and Performance Characteristics, User Environment and Regulatory information.

PHYSICAL CHARACTERISTICS	
Color	Black
Dimensions	Height 9.8 cm (3.9'') Length 24.3 cm (9.6'') Width 10.2 cm (4'')
ELECTRICAL CHARACTERISTICS	
Supply Voltage	BC9620: Host power 5-12VDC +/-5% External power 12 VDC +/-5% BC9630: Host power 5VDC +/-5%(*) or 10-30 VDC +/-5% External power 10-30 VDC +/-5% BC9631: Host power 5VDC +/-5%[a] or 10-30 VDC +/-5% BC9680: 10-30 VDC +/-5% BC9681: External power 10-30 VDC +/-5% or POE Injector IEEE 802.3af™ (or superior) compliant.
Power Consumption	max. 1.5 A (charging) max. 500 mA @5 V (charging)
Indicators	Power/Data green LED Reader battery state green/orange fading (see the PowerScan 9600 Product Reference Guide)
Time of Recharge typical @ 25°C ambient temperature	
External Power	typ. 3h 15' fast charge @ 12V typ. 2h 50' fast charge @ 24V
Host Power USB	typ. 15h 15'
Host Power USB type C	typ. 6h
ENVIRONMENTAL CHARACTERISTICS	
Working Temperature Radio Battery Charging	 -20° to +50 °C / -4 to +122 °F 0 to 40°C nominal (+32° to +104 °F) 0 to 35°C ideal (+32° to +95 °F)
Storage Temperature	-40° to +70 °C / -40 to +158 °F
Humidity	90% non condensing
Protection Class	BC9620, BC9630, BC9680: IP40 BC9631, BC9681: IP65
Regulatory	See Regulatory Addendum

a. with approved interface cables

RADIO CHARACTERISTICS			BT
	Star 433 models	Star 910 models	BT models
Frequency working center	433MHz	910MHz	2400 to 2483.5 MHz
Programmable Speed	19.2 kb/s 500 kb/s (default)	36.8 kb/s 500 kb/s (default)	
Typical Range (in open air)	100 m (at 500 kb/s) 150 m (at 19.2 kb/s)	180 m (at 500 kb/s) 230 m (at 36.8 kb/s, frequency hopping) 80 m (at 36.8 kb/s, fixed channel)	100 m
Max number of devices per base station	16		7

NOTE: A radio coverage reduction is expected when the base station is charging a gun.

TECHNICAL SUPPORT

Support Through the Website

Datalogic provides several services as well as technical support through its website. Log on to (www.datalogic.com).

For quick access, from the home page click on the search icon 🔍, and type in the name of the product you're looking for. This allows you access to download Data Sheets, Manuals, Software & Utilities, and Drawings.

Hover over the Support & Service menu for access to Services and Technical Support.

Reseller Technical Support

An excellent source for technical assistance and information is an authorized Datalogic reseller. A reseller is acquainted with specific types of businesses, application software, and computer systems and can provide individualized assistance.

WARRANTY

Datalogic warrants that the Products shall be free from defects in materials and workmanship under normal and proper use during the Warranty Period. Products are sold on the basis of specifications applicable at the time of manufacture and Datalogic has no obligation to modify or update Products once sold. The Warranty Period shall be **three years** from the date of shipment by Datalogic, unless otherwise agreed in an applicable writing by Datalogic.

Datalogic will not be liable under the warranty if the Product has been exposed or subjected to any: (1) maintenance, repair, installation, handling, packaging, transportation, storage, operation or use that is improper or otherwise not in compliance with Datalogic's instruction; (2) Product alteration, modification or repair by anyone other than Datalogic or those specifically authorized by Datalogic; (3) accident, contamination, foreign object damage, abuse, neglect or negligence after shipment to Buyer; (4) damage caused by failure of a Datalogic-supplied product not under warranty or by any hardware or software not supplied by Datalogic; (5) any device on which the warranty void seal has been altered, tampered with, or is missing; (6) any defect or damage caused by natural or man-made disaster such as but not limited to fire, water damage, floods, other natural disasters, vandalism or abusive events that would cause internal and external component damage or destruction of the whole unit, consumable items; (7) use of counterfeit or replacement parts that are neither manufactured nor approved by Datalogic for use in Datalogic-manufactured Products; (8) any damage or malfunctioning caused by non-restoring action as for example firmware or software upgrades, software or hardware reconfigurations etc.; (9) loss of data; (10) any consumable or equivalent (e.g. cables, power supply, batteries, etc.); or (11) any device on which the serial number is missing or not recognizable.

THE DATALOGIC WARRANTIES ARE EXCLUSIVE AND IN LIEU OF ALL OTHER WARRANTIES, WHETHER WRITTEN, EXPRESS, IMPLIED, STATUTORY OR OTHERWISE, INCLUDING, BUT NOT LIMITED TO, THE IMPLIED WARRANTIES OF MERCHANTABILITY AND FITNESS FOR PARTICULAR PURPOSE. DATALOGIC SHALL NOT BE LIABLE FOR ANY DAMAGES SUSTAINED BY BUYER ARISING FROM DELAYS IN THE REPLACEMENT OR REPAIR OF PRODUCTS UNDER THE ABOVE. THE REMEDY SET FORTH IN THE WARRANTY STATEMENT IS THE BUYER'S SOLE AND EXCLUSIVE REMEDY FOR WARRANTY CLAIMS. NO EXTENSION OF THIS WARRANTY WILL BE BINDING UPON DATALOGIC UNLESS SET FORTH IN WRITING AND SIGNED BY DATALOGIC'S AUTHORIZED REPRESENTATIVE. DATALOGIC'S LIABILITY FOR DAMAGES ON ACCOUNT OF A CLAIMED DEFECT IN ANY PRODUCT DELIVERED BY DATALOGIC SHALL IN NO EVENT EXCEED THE PURCHASE PRICE OF THE PRODUCT ON WHICH THE CLAIM IS BASED. DATALOGIC SHALL NOT BE LIABLE FOR DAMAGES RELATING TO ANY INSTRUMENT, EQUIPMENT, OR APPARATUS WITH WHICH THE PRODUCT SOLD UNDER THIS AGREEMENT IS USED. Further details on warranty coverage, rights and conditions are addressed under and regulated by the Terms and Conditions of Sales of Datalogic available at https://www.datalogic.com/terms_conditions_sales.

©2022-2023 Datalogic S.p.A. and /or its affiliates. • All rights reserved • Without limiting the rights under copyright, no part of this documentation may be reproduced, stored in or introduced into a retrieval system, or transmitted in any form or by any means, or for any purpose, without the express written permission of Datalogic S.p.A. and/or its affiliates • Datalogic and the Datalogic logo are registered trademarks of Datalogic S.p.A. in many countries, including the U.S. and the E.U.

DATALOGIC
www.datalogic.com

Datalogic S.r.l.
Via S. Vitalino, 13 | 40012 Calderara di Reno | Bologna - Italy
Tel. +39 051 3147011 | Fax +39 051 3147205

800000290 Rev. C October 2023