#01_WLAN2.4GHz_802.11b 1Mbps_Edge 1_0mm_Ch11;Ant 2

Communication System: 802.11b; Frequency: 2462 MHz;Duty Cycle: 1:1.017
Medium: MSL_2450_190125 Medium parameters used: f = 2462 MHz; σ = 2.011 S/m; ε_r = 51.956; ρ = 1000 kg/m^3
Ambient Temperature：23.7 ℃; Liquid Temperature：22.7 ℃

DASY5 Configuration:
- Probe: EX3DV4 - SN3931; ConvF(7.56, 7.56, 7.56) ; Calibrated: 2018/9/27
- Sensor-Surface: 1.4mm (Mechanical Surface Detection)
- Electronics: DAE4 Sn1399; Calibrated: 2018/11/16
- Phantom: ELI v4.0; Type: QDOVA001BB; Serial: 1026
- Measurement SW: DASY52, Version 52.10 (1);SEMCAD X Version 14.6.11 (7439)

Area Scan (51x81x1): Interpolated grid: dx=1.200 mm, dy=1.200 mm
Maximum value of SAR (interpolated) = 2.51 W/kg

Zoom Scan (7x7x7)/Cube 0: Measurement grid: dx=5mm, dy=5mm, dz=5mm
Reference Value = 18.13 V/m; Power Drift = -0.12 dB
Peak SAR (extrapolated) = 2.75 W/kg
SAR(1 g) = 1.14 W/kg; SAR(10 g) = 0.435 W/kg
Maximum value of SAR (measured) = 2.00 W/kg

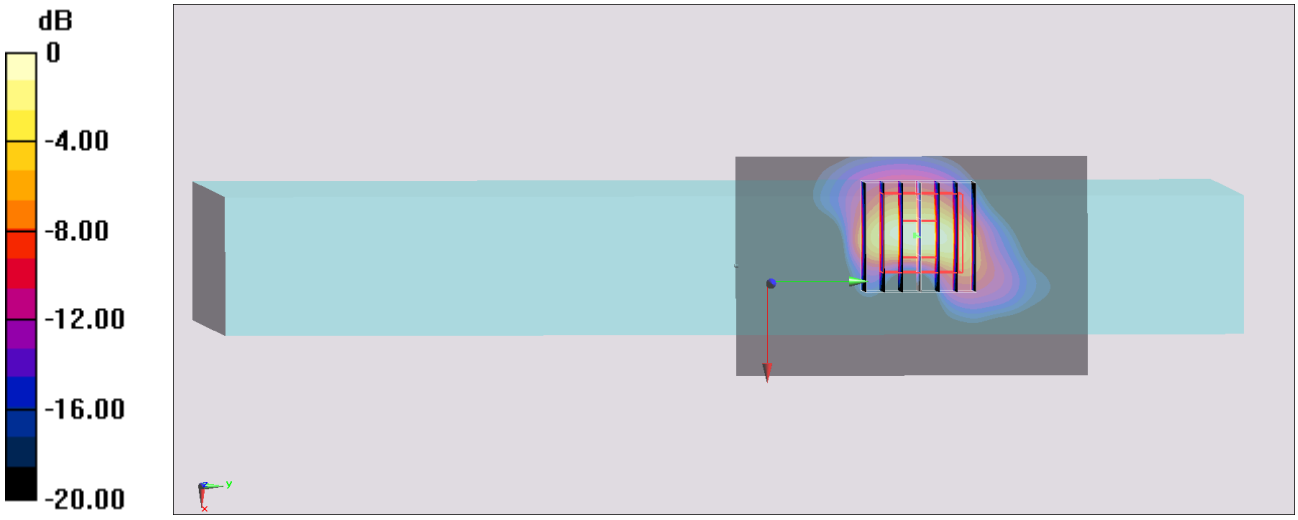

0 dB = 2.51 W/kg = 4.00 dBW/kg

#02_WLAN5GHz_802.11a 6Mbps_Edge 1_0mm_Ch52;Ant 2

Communication System: 802.11a; Frequency: 5260 MHz;Duty Cycle: 1:1.084
Medium: MSL_5G_190126 Medium parameters used: f = 5260 MHz; σ = 5.503 S/m; ε_r = 49.797; ρ = 1000 kg/m^3
Ambient Temperature：23.5 ℃; Liquid Temperature：22.5 ℃

DASY5 Configuration:
- Probe: EX3DV4 - SN3931; ConvF(4.4, 4.4, 4.4) ; Calibrated: 2018/9/27
- Sensor-Surface: 1.4mm (Mechanical Surface Detection)
- Electronics: DAE4 Sn1399; Calibrated: 2018/11/16
- Phantom: ELI v5.0; Type: QDOVA002AA; Serial: 1131
- Measurement SW: DASY52, Version 52.10 (1);SEMCAD X Version 14.6.11 (7439)

Area Scan (81x101x1): Interpolated grid: dx=1.000 mm, dy=1.000 mm
Maximum value of SAR (interpolated) = 2.37 W/kg

Zoom Scan (7x7x7)/Cube 0: Measurement grid: dx=4mm, dy=4mm, dz=1.4mm
Reference Value = 8.879 V/m; Power Drift = -0.15 dB
Peak SAR (extrapolated) = 3.54 W/kg
SAR(1 g) = 0.909 W/kg; SAR(10 g) = 0.251 W/kg
Maximum value of SAR (measured) = 2.29 W/kg

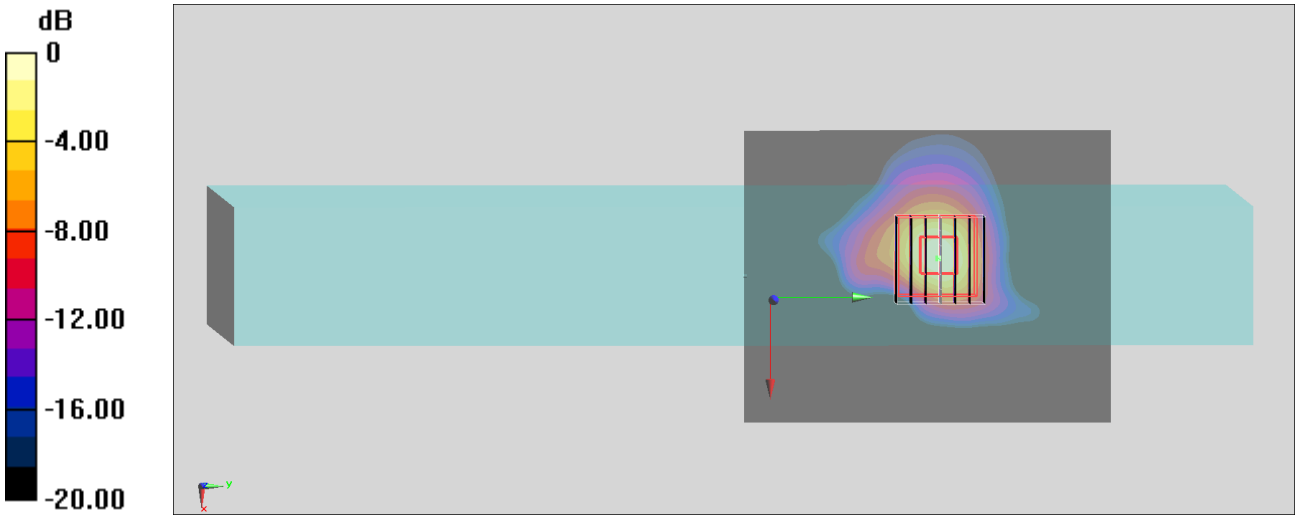

0 dB = 2.37 W/kg = 3.75 dBW/kg

#03_WLAN5GHz_802.11a 6Mbps_Bottom Face_0mm_Ch132;Ant 2

Communication System: 802.11a; Frequency: 5660 MHz;Duty Cycle: 1:1.084
Medium: MSL_5G_190126 Medium parameters used: f = 5660 MHz; σ = 6.055 S/m; ε_r = 49.113; ρ = 1000 kg/m^3
Ambient Temperature：23.5 ℃; Liquid Temperature：22.5 ℃

DASY5 Configuration:
- Probe: EX3DV4 - SN3931; ConvF(3.82, 3.82, 3.82) ; Calibrated: 2018/9/27
- Sensor-Surface: 1.4mm (Mechanical Surface Detection)
- Electronics: DAE4 Sn1399; Calibrated: 2018/11/16
- Phantom: ELI v5.0; Type: QDOVA002AA; Serial: 1131
- Measurement SW: DASY52, Version 52.10 (1);SEMCAD X Version 14.6.11 (7439)

Area Scan (61x81x1): Interpolated grid: dx=1.000 mm, dy=1.000 mm
Maximum value of SAR (interpolated) = 2.30 W/kg

Zoom Scan (7x7x7)/Cube 0: Measurement grid: dx=4mm, dy=4mm, dz=1.4mm
Reference Value = 10.27 V/m; Power Drift = 0.06 dB
Peak SAR (extrapolated) = 3.73 W/kg
SAR(1 g) = 0.857 W/kg; SAR(10 g) = 0.257 W/kg
Maximum value of SAR (measured) = 2.14 W/kg

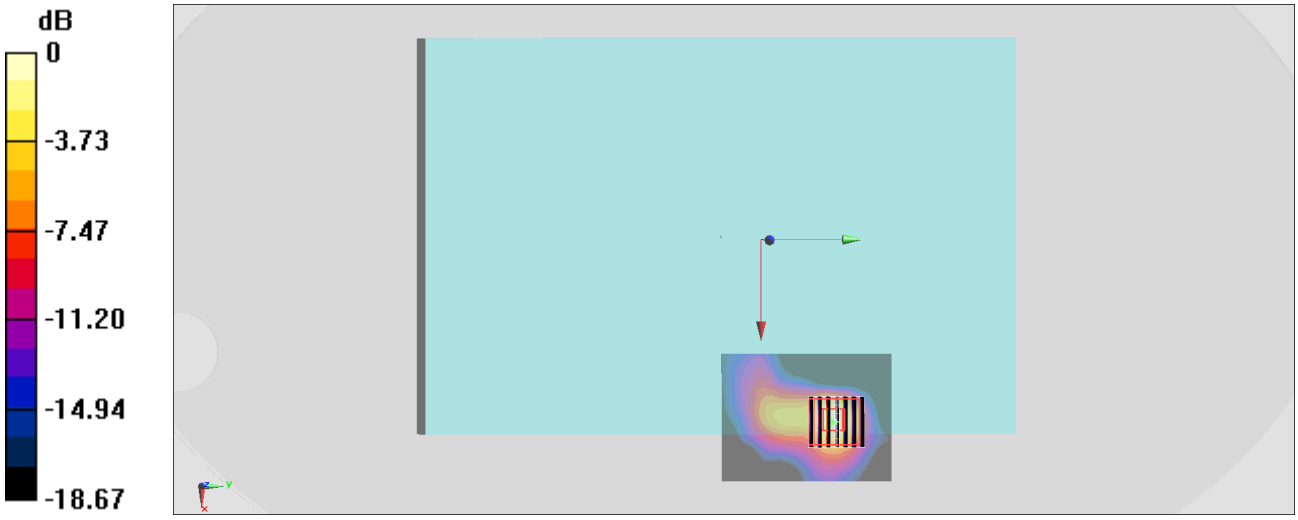

0 dB = 2.14 W/kg = 3.30 dBW/kg

#04_WLAN5GHz_802.11a 6Mbps_Bottom Face_0mm_Ch157;Ant 2

Communication System: 802.11a; Frequency: 5785 MHz;Duty Cycle: 1:1.084
Medium: MSL_5G_190126 Medium parameters used: f = 5785 MHz; σ = 6.237 S/m; ε_r = 48.911; ρ = 1000 kg/m^3
Ambient Temperature：23.5 ℃; Liquid Temperature：22.5 ℃

DASY5 Configuration:
- Probe: EX3DV4 - SN3931; ConvF(4.11, 4.11, 4.11) ; Calibrated: 2018/9/27
- Sensor-Surface: 1.4mm (Mechanical Surface Detection)
- Electronics: DAE4 Sn1399; Calibrated: 2018/11/16
- Phantom: ELI v5.0; Type: QDOVA002AA; Serial: 1131
- Measurement SW: DASY52, Version 52.10 (1);SEMCAD X Version 14.6.11 (7439)

Area Scan (81x101x1): Interpolated grid: dx=1.000 mm, dy=1.000 mm
Maximum value of SAR (interpolated) = 2.61 W/kg

Zoom Scan (7x7x7)/Cube 0: Measurement grid: dx=4mm, dy=4mm, dz=1.4mm
Reference Value = 12.11 V/m; Power Drift = 0.13 dB
Peak SAR (extrapolated) = 4.27 W/kg
SAR(1 g) = 0.952 W/kg; SAR(10 g) = 0.276 W/kg
Maximum value of SAR (measured) = 2.46 W/kg

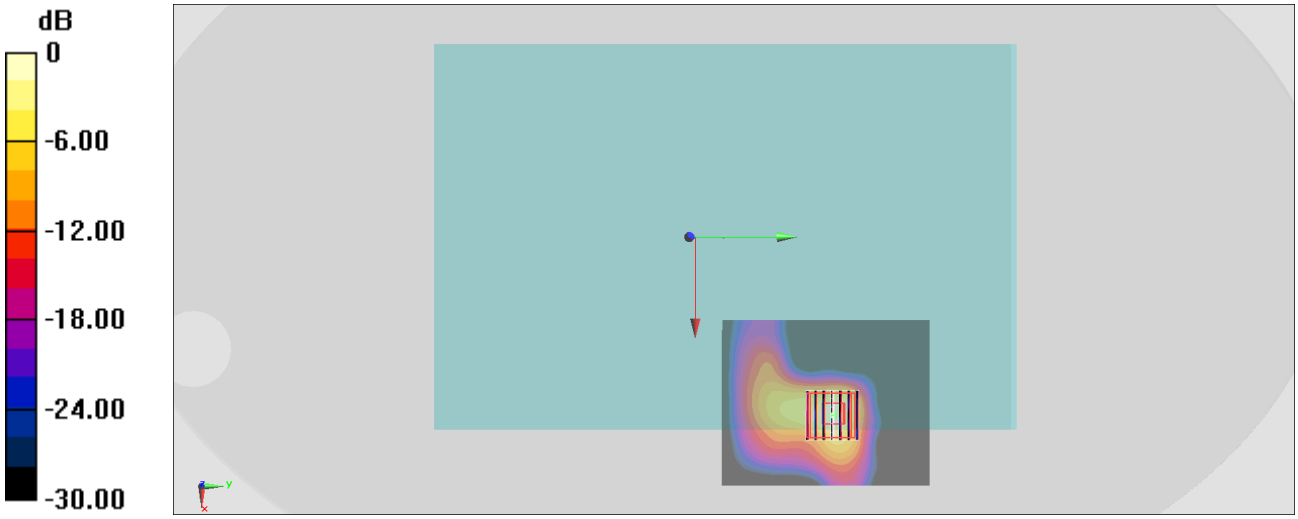

0 dB = 2.46 W/kg = 3.91 dBW/kg