Test Laboratory: Sporton International Inc. SAR/HAC Testing Lab Date: 2019/8/16

System Check_Head_750MHz

DUT: D750V3-1107

Communication System: CW; Frequency: 750 MHz;Duty Cycle: 1:1
Medium: HSL_750_190816 Medium parameters used: f = 750 MHz; σ = 0.889 S/m; ε_r = 42.883; ρ = 1000 kg/m^3
Ambient Temperature：23.7 ℃; Liquid Temperature：22.7 ℃

DASY5 Configuration:
- Probe: ES3DV3 - SN3270; ConvF(6.56, 6.56, 6.56) @ 750 MHz; Calibrated: 2018/9/24
- Sensor-Surface: 3mm (Mechanical Surface Detection)
- Electronics: DAE3 Sn577; Calibrated: 2018/9/19
- Phantom: SAM_Left; Type: QD000P40CD; Serial: TP:1431
- Measurement SW: DASY52, Version 52.10 (2);SEMCAD X Version 14.6.12 (7470)

Pin=250mW/Area Scan (61x61x1): Interpolated grid: dx=1.500 mm, dy=1.500 mm
Maximum value of SAR (interpolated) = 2.50 W/kg

Pin=250mW/Zoom Scan (5x5x7)/Cube 0: Measurement grid: dx=8mm, dy=8mm, dz=5mm
Reference Value = 52.92 V/m; Power Drift = -0.00 dB
Peak SAR (extrapolated) = 2.82 W/kg
SAR(1 g) = 2 W/kg; SAR(10 g) = 1.35 W/kg
Maximum value of SAR (measured) = 2.30 W/kg

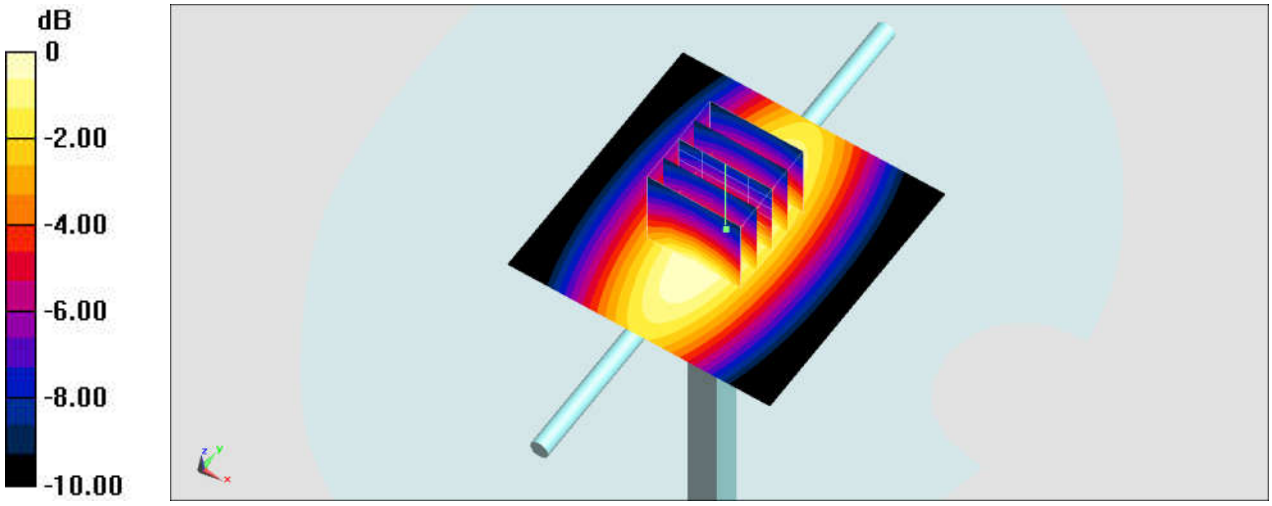

0 dB = 2.30 W/kg = 3.62 dBW/kg

Test Laboratory: Sporton International Inc. SAR/HAC Testing Lab Date: 2019/8/7

System Check_Head_835MHz

DUT: D835V2-4d167

Communication System: CW ; Frequency: 835 MHz;Duty Cycle: 1:1
Medium: HSL_850_190807 Medium parameters used: f = 835 MHz; σ = 0.89 S/m; ε_r = 42.729; ρ = 1000 kg/m^3
Ambient Temperature：23.1 ℃; Liquid Temperature：22.1 ℃

DASY5 Configuration:
- Probe: ES3DV3 - SN3270; ConvF(6.39, 6.39, 6.39) @ 835 MHz; Calibrated: 2018/9/24
- Sensor-Surface: 3mm (Mechanical Surface Detection)
- Electronics: DAE3 Sn577; Calibrated: 2018/9/19
- Phantom: SAM_Left; Type: QD000P40CD; Serial: TP:1431
- Measurement SW: DASY52, Version 52.10 (2);SEMCAD X Version 14.6.12 (7470)

Pin=250mW/Area Scan (61x61x1): Interpolated grid: dx=1.500 mm, dy=1.500 mm
Maximum value of SAR (interpolated) = 2.80 W/kg

Pin=250mW/Zoom Scan (5x5x7)/Cube 0: Measurement grid: dx=8mm, dy=8mm, dz=5mm
Reference Value = 58.62 V/m; Power Drift = -0.15 dB
Peak SAR (extrapolated) = 3.51 W/kg
SAR(1 g) = 2.38 W/kg; SAR(10 g) = 1.56 W/kg
Maximum value of SAR (measured) = 2.77 W/kg

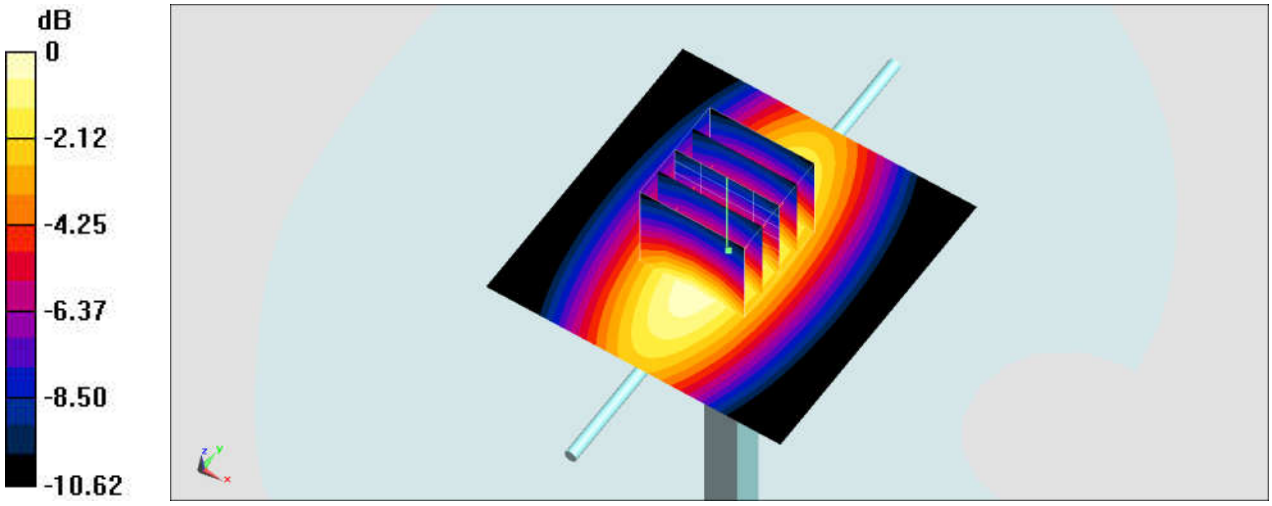

0 dB = 2.77 W/kg = 4.42 dBW/kg

Test Laboratory: Sporton International Inc. SAR/HAC Testing Lab Date: 2019/8/14

System Check_Head_835MHz

DUT: D835V2-4d167

Communication System: CW ; Frequency: 835 MHz;Duty Cycle: 1:1
Medium: HSL_850_190814 Medium parameters used: f = 835 MHz; σ = 0.925 S/m; ε_r = 43.074; ρ = 1000 kg/m^3
Ambient Temperature：23.5 ℃; Liquid Temperature：22.5 ℃

DASY5 Configuration:
- Probe: ES3DV3 - SN3270; ConvF(6.39, 6.39, 6.39) @ 835 MHz; Calibrated: 2018/9/24
- Sensor-Surface: 3mm (Mechanical Surface Detection)
- Electronics: DAE3 Sn577; Calibrated: 2018/9/19
- Phantom: SAM_Left; Type: QD000P40CD; Serial: TP:1431
- Measurement SW: DASY52, Version 52.10 (2);SEMCAD X Version 14.6.12 (7470)

Pin=250mW/Area Scan (61x61x1): Interpolated grid: dx=1.500 mm, dy=1.500 mm
Maximum value of SAR (interpolated) = 2.93 W/kg

Pin=250mW/Zoom Scan (5x5x7)/Cube 0: Measurement grid: dx=8mm, dy=8mm, dz=5mm
Reference Value = 58.21 V/m; Power Drift = -0.03 dB
Peak SAR (extrapolated) = 3.71 W/kg
SAR(1 g) = 2.51 W/kg; SAR(10 g) = 1.65 W/kg
Maximum value of SAR (measured) = 2.91 W/kg

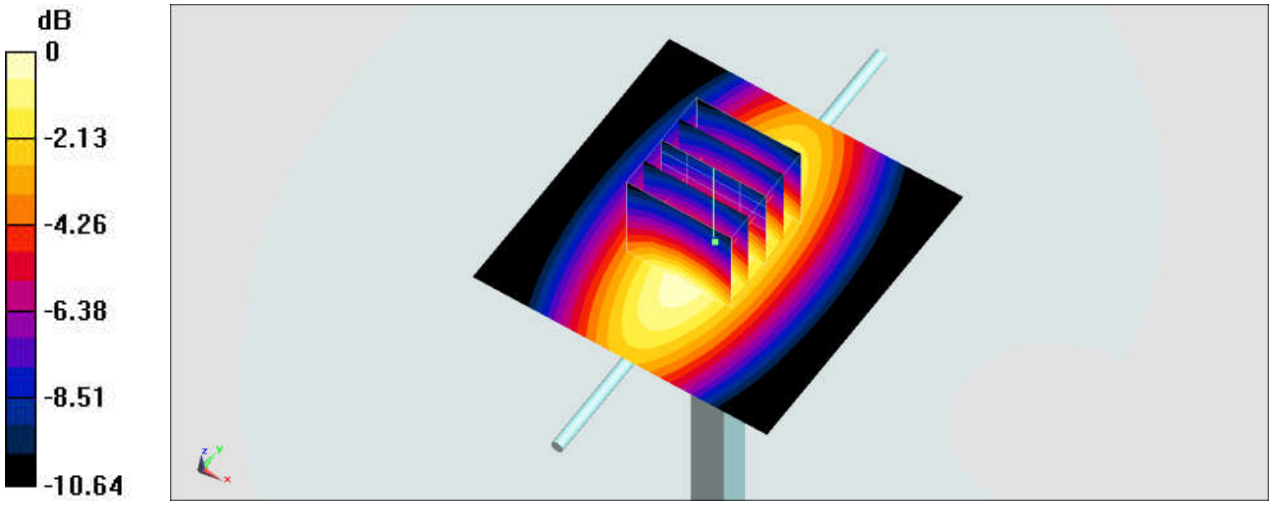

0 dB = 2.91 W/kg = 4.64 dBW/kg

System Check_Head_1750MHz

DUT: D1750V2-1112

Communication System: CW; Frequency: 1750 MHz;Duty Cycle: 1:1
Medium: HSL_1750_190812 Medium parameters used: f = 1750 MHz; σ = 1.373 S/m; ε_r = 40.867; ρ = 1000 kg/m^3
Ambient Temperature：23.3 ℃; Liquid Temperature：22.3 ℃

DASY5 Configuration:
- Probe: EX3DV4 - SN7515; ConvF(8.65, 8.65, 8.65) @ 1750 MHz; Calibrated: 2018/10/3
- Sensor-Surface: 1.4mm (Mechanical Surface Detection)
- Electronics: DAE4 Sn853; Calibrated: 2019/7/18
- Phantom: SAM_Right; Type: SAM; Serial: TP:1479
- Measurement SW: DASY52, Version 52.10 (2);SEMCAD X Version 14.6.12 (7470)

Pin=250mW/Area Scan (61x61x1): Interpolated grid: dx=1.500 mm, dy=1.500 mm
Maximum value of SAR (interpolated) = 13.0 W/kg

Pin=250mW/Zoom Scan (5x5x7)/Cube 0: Measurement grid: dx=8mm, dy=8mm, dz=5mm
Reference Value = 100.9 V/m; Power Drift = -0.15 dB
Peak SAR (extrapolated) = 15.1 W/kg
SAR(1 g) = 8.64 W/kg; SAR(10 g) = 4.68 W/kg
Maximum value of SAR (measured) = 13.0 W/kg

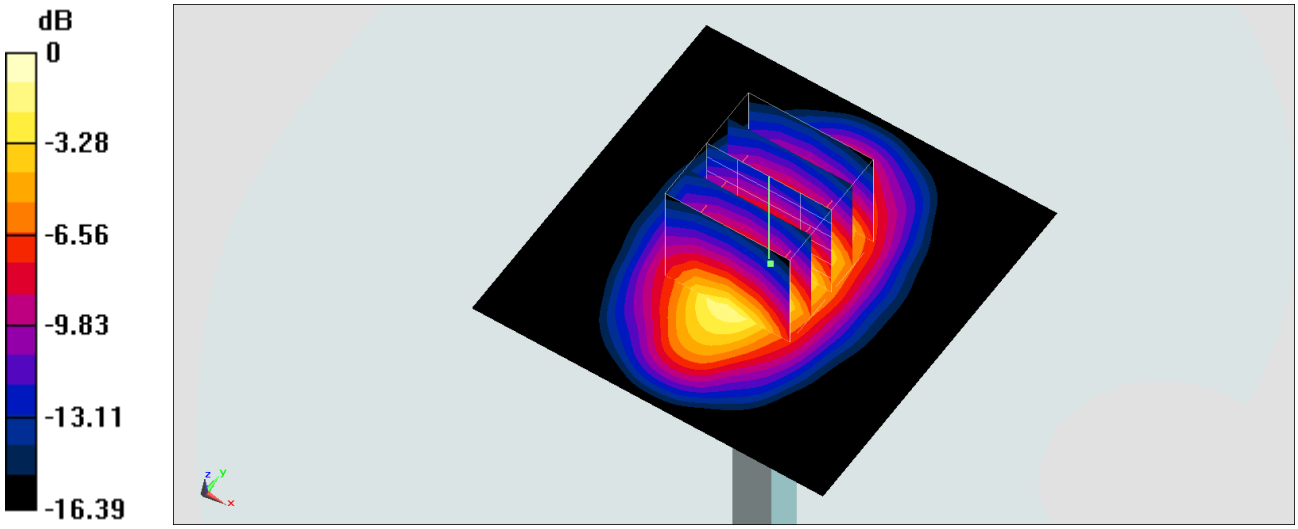

0 dB = 13.0 W/kg = 11.14 dBW/kg

Test Laboratory: Sporton International Inc. SAR/HAC Testing Lab Date: 2019/8/17

System Check_Head_1750MHz

DUT: D1750V2-1112

Communication System: CW; Frequency: 1750 MHz;Duty Cycle: 1:1
Medium: HSL_1750_190817 Medium parameters used: f = 1750 MHz; σ = 1.372 S/m; ε_r = 40.769; ρ = 1000 kg/m^3
Ambient Temperature：23.5 ℃; Liquid Temperature：22.5 ℃

DASY5 Configuration:
- Probe: ES3DV3 - SN3270; ConvF(5.42, 5.42, 5.42) @ 1750 MHz; Calibrated: 2018/9/24
- Sensor-Surface: 3mm (Mechanical Surface Detection)
- Electronics: DAE3 Sn577; Calibrated: 2018/9/19
- Phantom: SAM-Right; Type: SAM; Serial: TP-1503
- Measurement SW: DASY52, Version 52.10 (2);SEMCAD X Version 14.6.12 (7470)

Pin=250mW/Area Scan (61x61x1): Interpolated grid: dx=1.500 mm, dy=1.500 mm
Maximum value of SAR (interpolated) = 11.5 W/kg

Pin=250mW/Zoom Scan (5x5x7)/Cube 0: Measurement grid: dx=8mm, dy=8mm, dz=5mm
Reference Value = 93.18 V/m; Power Drift = 0.11 dB
Peak SAR (extrapolated) = 15.5 W/kg
SAR(1 g) = 9.05 W/kg; SAR(10 g) = 4.95 W/kg
Maximum value of SAR (measured) = 11.0 W/kg

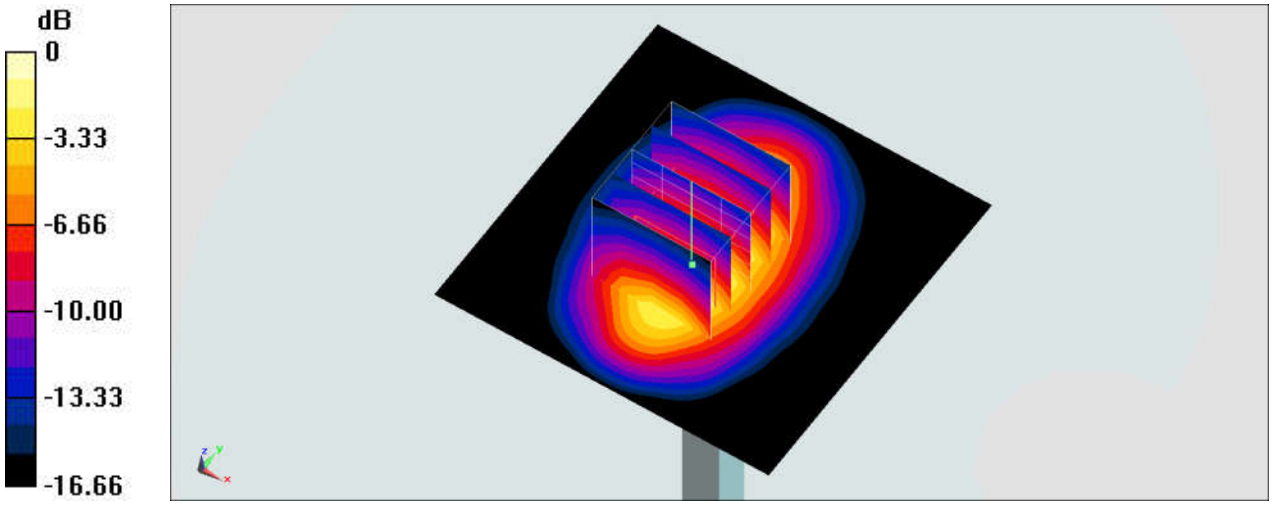

0 dB = 11.0 W/kg = 10.41 dBW/kg

System Check_Head_1900MHz

DUT: D1900V2-5d185

Communication System: CW ; Frequency: 1900 MHz;Duty Cycle: 1:1
Medium: HSL_1900_190811 Medium parameters used: f = 1900 MHz; σ = 1.416 S/m; ε_r = 40.799; ρ = 1000 kg/m^3
Ambient Temperature：23.9 ℃; Liquid Temperature：22.9 ℃

DASY5 Configuration:
- Probe: EX3DV4 - SN7515; ConvF(8.33, 8.33, 8.33) @ 1900 MHz; Calibrated: 2018/10/3
- Sensor-Surface: 1.4mm (Mechanical Surface Detection)
- Electronics: DAE4 Sn853; Calibrated: 2019/7/18
- Phantom: SAM_Right; Type: SAM; Serial: TP:1479
- Measurement SW: DASY52, Version 52.10 (2);SEMCAD X Version 14.6.12 (7470)

Pin=250mW/Area Scan (61x61x1): Interpolated grid: dx=1.500 mm, dy=1.500 mm
Maximum value of SAR (interpolated) = 14.9 W/kg

Pin=250mW/Zoom Scan (5x5x7)/Cube 0: Measurement grid: dx=8mm, dy=8mm, dz=5mm
Reference Value = 98.78 V/m; Power Drift = 0.12 dB
Peak SAR (extrapolated) = 17.9 W/kg
SAR(1 g) = 9.72 W/kg; SAR(10 g) = 5.07 W/kg
Maximum value of SAR (measured) = 15.1 W/kg

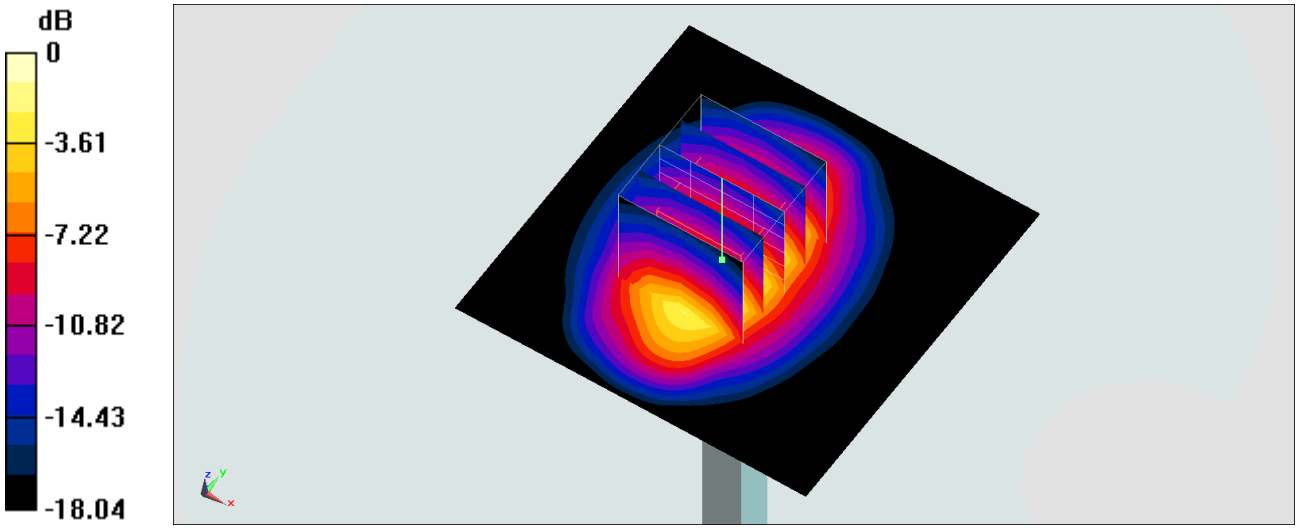

0 dB = 15.1 W/kg = 11.79 dBW/kg

Test Laboratory: Sporton International Inc. SAR/HAC Testing Lab Date: 2019/8/19

System Check_Head_1900MHz

DUT: D1900V2-5d185

Communication System: CW; Frequency: 1900 MHz;Duty Cycle: 1:1
Medium: HSL_1900_190819 Medium parameters used: f = 1900 MHz; σ = 1.41 S/m; ε_r = 39.087; ρ = 1000 kg/m^3
Ambient Temperature：23.4 ℃; Liquid Temperature：22.4 ℃

DASY5 Configuration:
- Probe: ES3DV3 - SN3270; ConvF(5.17, 5.17, 5.17) @ 1900 MHz; Calibrated: 2018/9/24
- Sensor-Surface: 3mm (Mechanical Surface Detection)
- Electronics: DAE3 Sn577; Calibrated: 2018/9/19
- Phantom: SAM-Right; Type: SAM; Serial: TP-1503
- Measurement SW: DASY52, Version 52.10 (2);SEMCAD X Version 14.6.12 (7470)

Pin=250mW/Area Scan (61x61x1): Interpolated grid: dx=1.500 mm, dy=1.500 mm
Maximum value of SAR (interpolated) = 12.5 W/kg

Pin=250mW/Zoom Scan (5x5x7)/Cube 0: Measurement grid: dx=8mm, dy=8mm, dz=5mm
Reference Value = 93.82 V/m; Power Drift = 0.05 dB
Peak SAR (extrapolated) = 18.1 W/kg
SAR(1 g) = 9.72 W/kg; SAR(10 g) = 5.02 W/kg
Maximum value of SAR (measured) = 12.3 W/kg

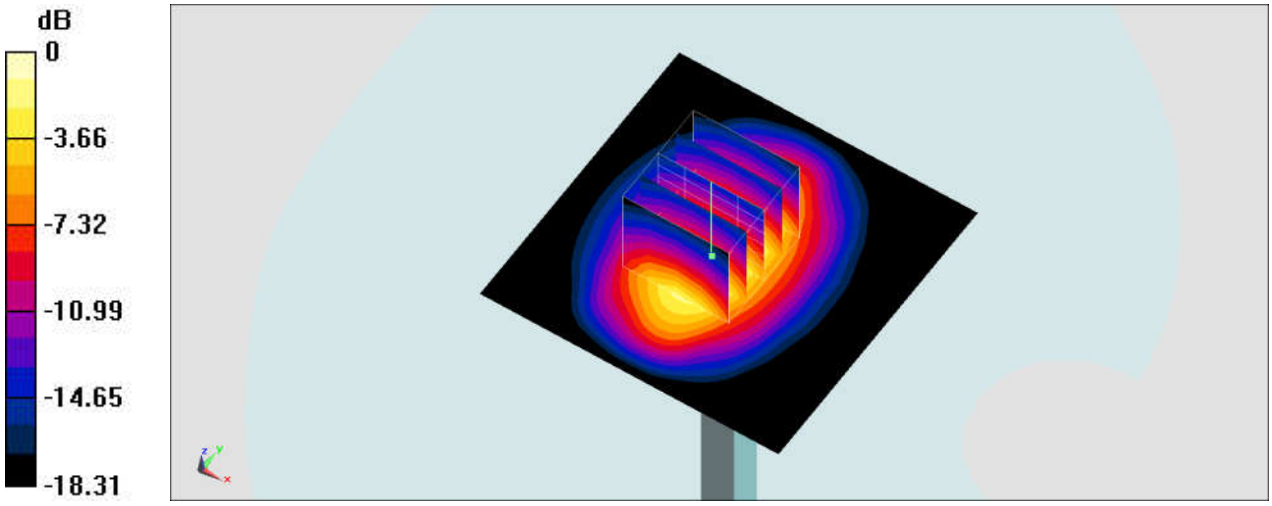

0 dB = 12.3 W/kg = 10.90 dBW/kg

System Check_Head_2300MHz

DUT: D2300V2-1006

Communication System: CW ; Frequency: 2300 MHz;Duty Cycle: 1:1
Medium: HSL_2300_190705 Medium parameters used: f = 2300 MHz; σ = 1.693 S/m; ε_r = 40.391; ρ = 1000 kg/m^3
Ambient Temperature：23.3 ℃; Liquid Temperature：22.3 ℃

DASY5 Configuration:
- Probe: EX3DV4 - SN3925; ConvF(7.97, 7.97, 7.97) @ 2300 MHz; Calibrated: 2019/5/24
- Sensor-Surface: 1.4mm (Mechanical Surface Detection)
- Electronics: DAE4 Sn778; Calibrated: 2019/5/21
- Phantom: SAM_Left; Type: QD000P40CD; Serial: TP:1477
- Measurement SW: DASY52, Version 52.10 (2);SEMCAD X Version 14.6.12 (7470)

Pin=250mW/Area Scan (71x71x1): Interpolated grid: dx=1.200 mm, dy=1.200 mm
Maximum value of SAR (interpolated) = 21.1 W/kg

Pin=250mW/Zoom Scan (7x7x7)/Cube 0: Measurement grid: dx=5mm, dy=5mm, dz=5mm
Reference Value = 115.3 V/m; Power Drift = -0.05 dB
Peak SAR (extrapolated) = 26.3 W/kg
SAR(1 g) = 12.6 W/kg; SAR(10 g) = 5.94 W/kg
Maximum value of SAR (measured) = 21.2 W/kg

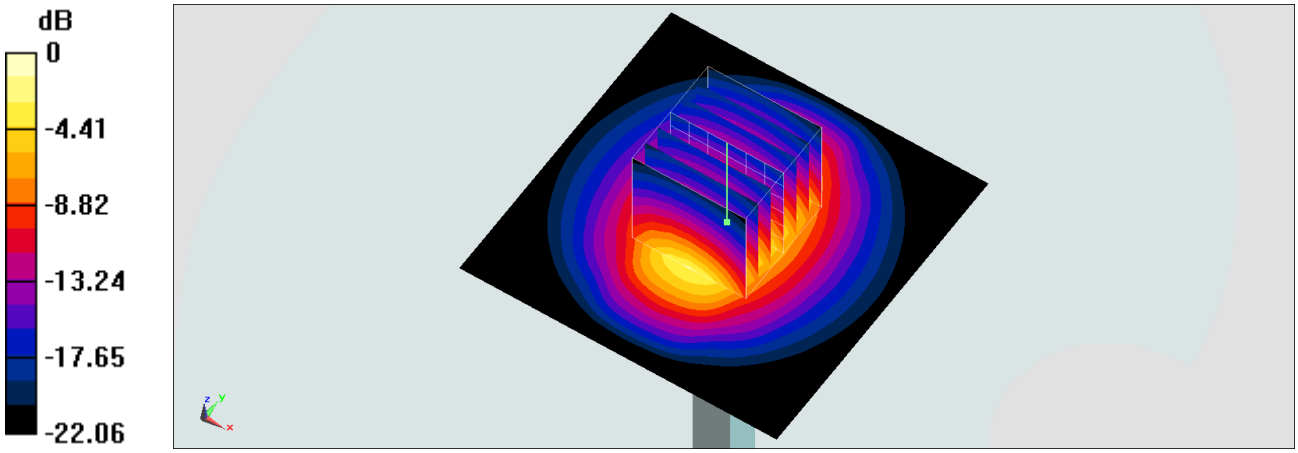

0 dB = 21.2 W/kg = 13.26 dBW/kg

System Check_Head_2300MHz

DUT: D2300V2-1006

Communication System: CW ; Frequency: 2300 MHz;Duty Cycle: 1:1
Medium: HSL_2300_190810 Medium parameters used: f = 2300 MHz; σ = 1.65 S/m; ε_r = 40.596; ρ = 1000 kg/m^3
Ambient Temperature：23.6 ℃; Liquid Temperature：22.6 ℃

DASY5 Configuration:
- Probe: EX3DV4 - SN7515; ConvF(7.86, 7.86, 7.86) @ 2300 MHz; Calibrated: 2018/10/3
- Sensor-Surface: 1.4mm (Mechanical Surface Detection)
- Electronics: DAE4 Sn853; Calibrated: 2019/7/18
- Phantom: SAM_Left; Type: QD000P40CD; Serial: TP:1477
- Measurement SW: DASY52, Version 52.10 (2);SEMCAD X Version 14.6.12 (7470)

Pin=250mW/Area Scan (71x71x1): Interpolated grid: dx=1.200 mm, dy=1.200 mm
Maximum value of SAR (interpolated) = 21.3 W/kg

Pin=250mW/Zoom Scan (7x7x7)/Cube 0: Measurement grid: dx=5mm, dy=5mm, dz=5mm
Reference Value = 118.2 V/m; Power Drift = -0.07 dB
Peak SAR (extrapolated) = 26.5 W/kg
SAR(1 g) = 12.9 W/kg; SAR(10 g) = 6.06 W/kg
Maximum value of SAR (measured) = 21.5 W/kg

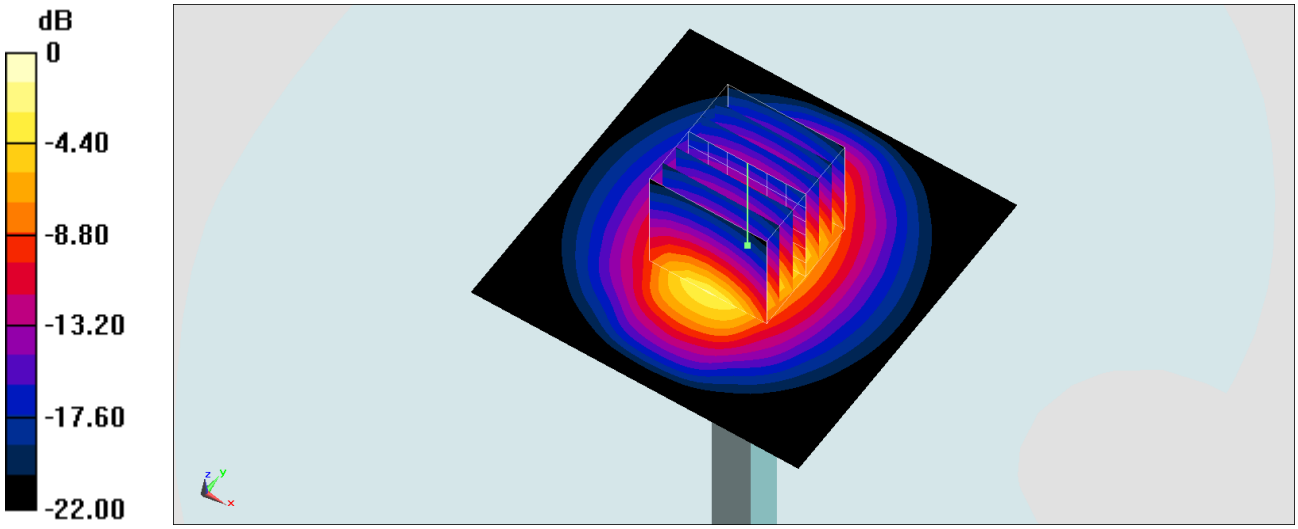

0 dB = 21.5 W/kg = 13.32 dBW/kg

System Check_Head_2300MHz

DUT: D2300V2-1006

Communication System: CW ; Frequency: 2300 MHz;Duty Cycle: 1:1
Medium: HSL_2300_190909 Medium parameters used: f = 2300 MHz; σ = 1.665 S/m; ε_r = 38.507; ρ = 1000 kg/m^3
Ambient Temperature：23.7 ℃; Liquid Temperature：22.7 ℃

DASY5 Configuration:
- Probe: EX3DV4 - SN7515; ConvF(7.86, 7.86, 7.86) @ 2300 MHz; Calibrated: 2018/10/3
- Sensor-Surface: 1.4mm (Mechanical Surface Detection)
- Electronics: DAE4 Sn853; Calibrated: 2019/7/18
- Phantom: SAM_Right; Type: SAM; Serial: TP:1479
- Measurement SW: DASY52, Version 52.10 (2);SEMCAD X Version 14.6.12 (7470)

Pin=250mW/Area Scan (71x71x1): Interpolated grid: dx=1.200 mm, dy=1.200 mm
Maximum value of SAR (interpolated) = 20.9 W/kg

Pin=250mW/Zoom Scan (7x7x7)/Cube 0: Measurement grid: dx=5mm, dy=5mm, dz=5mm
Reference Value = 113.8 V/m; Power Drift = 0.07 dB
Peak SAR (extrapolated) = 26.1 W/kg
SAR(1 g) = 12.5 W/kg; SAR(10 g) = 5.92 W/kg
Maximum value of SAR (measured) = 20.8 W/kg

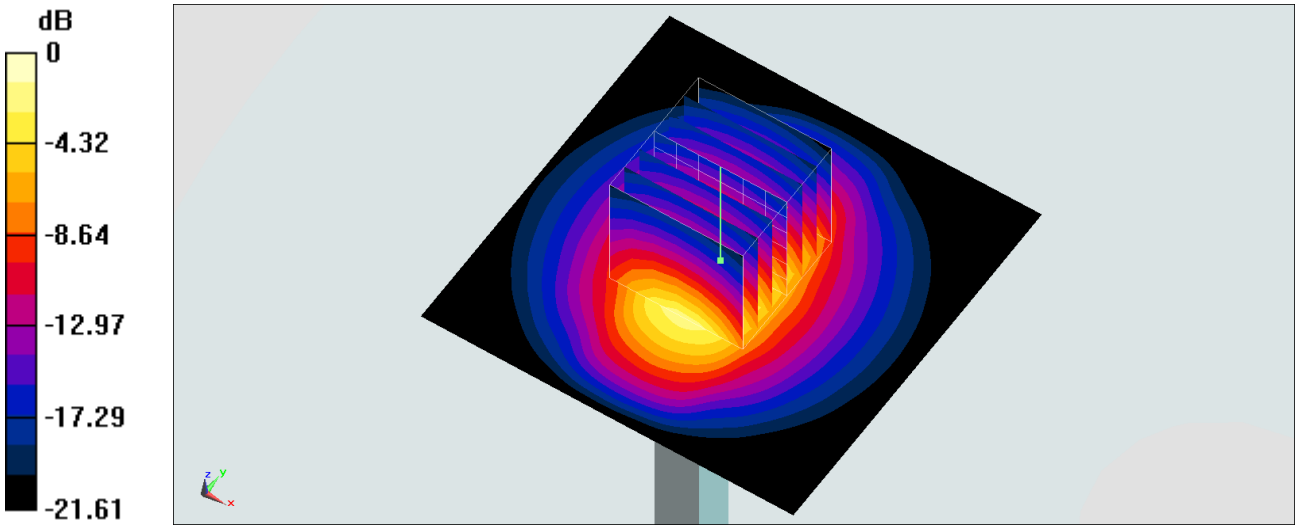

0 dB = 20.8 W/kg = 13.18 dBW/kg

System Check_Head_2450MHz

DUT: D2450V2-929

Communication System: CW; Frequency: 2450 MHz;Duty Cycle: 1:1
Medium: HSL_2450_190827 Medium parameters used: f = 2450 MHz; σ = 1.792 S/m; ε_r = 39.144; ρ = 1000 kg/m^3
Ambient Temperature：23.5 ℃; Liquid Temperature：22.5 ℃

DASY5 Configuration:
- Probe: ES3DV3 - SN3124; ConvF(4.49, 4.49, 4.49) @ 2450 MHz; Calibrated: 2019/1/15
- Sensor-Surface: 3mm (Mechanical Surface Detection)
- Electronics: DAE4 Sn316; Calibrated: 2019/1/3
- Phantom: SAM_Left; Type: QD000P40CD; Serial: TP:1684
- Measurement SW: DASY52, Version 52.10 (2);SEMCAD X Version 14.6.12 (7470)

Pin=250mW/Area Scan (71x71x1): Interpolated grid: dx=1.200 mm, dy=1.200 mm
Maximum value of SAR (interpolated) = 17.3 W/kg

Pin=250mW/Zoom Scan (7x7x7)/Cube 0: Measurement grid: dx=5mm, dy=5mm, dz=5mm
Reference Value = 96.69 V/m; Power Drift = 0.07 dB
Peak SAR (extrapolated) = 27.1 W/kg
SAR(1 g) = 12.8 W/kg; SAR(10 g) = 5.84 W/kg
Maximum value of SAR (measured) = 17.1 W/kg

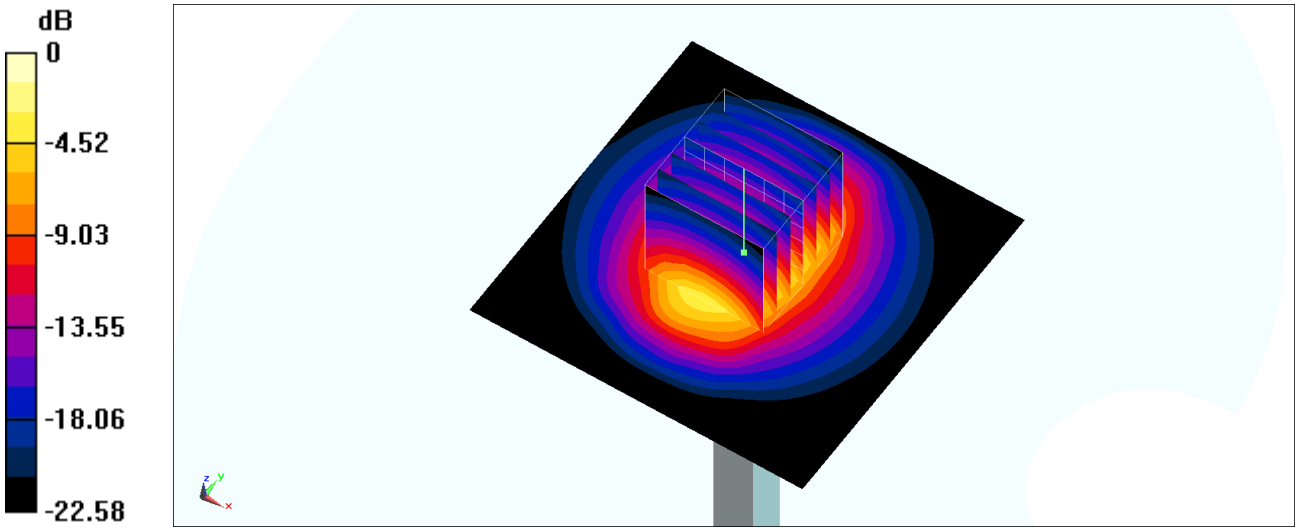

0 dB = 17.1 W/kg = 12.33 dBW/kg

System Check_Head_2600MHz

DUT: D2600V2-1008

Communication System: CW ; Frequency: 2600 MHz;Duty Cycle: 1:1
Medium: HSL_2600_190705 Medium parameters used: f = 2600 MHz; σ = 2.049 S/m; ε_r = 39.178; ρ = 1000 kg/m^3
Ambient Temperature：23.3 ℃; Liquid Temperature：22.3 ℃

DASY5 Configuration:
- Probe: EX3DV4 - SN3728; ConvF(6.94, 6.94, 6.94) @ 2600 MHz; Calibrated: 2019/1/15
- Sensor-Surface: 1.4mm (Mechanical Surface Detection)
- Electronics: DAE4 Sn699; Calibrated: 2019/1/3
- Phantom: SAM_Left; Type: QD000P40CD; Serial: TP:1477
- Measurement SW: DASY52, Version 52.10 (2);SEMCAD X Version 14.6.12 (7470)

Pin=250mW/Area Scan (71x71x1): Interpolated grid: dx=1.200 mm, dy=1.200 mm
Maximum value of SAR (interpolated) = 27.1 W/kg

Pin=250mW/Zoom Scan (7x7x7)/Cube 0: Measurement grid: dx=5mm, dy=5mm, dz=5mm
Reference Value = 118.4 V/m; Power Drift = -0.02 dB
Peak SAR (extrapolated) = 34.1 W/kg
SAR(1 g) = 15.4 W/kg; SAR(10 g) = 6.81 W/kg
Maximum value of SAR (measured) = 27.0 W/kg

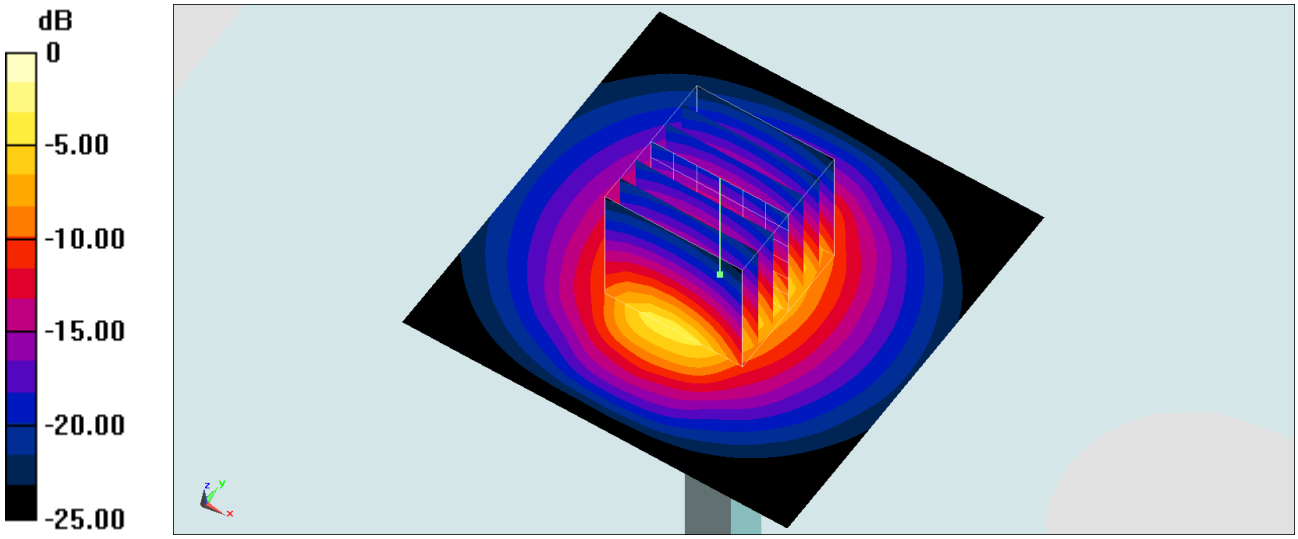

0 dB = 27.0 W/kg = 14.31 dBW/kg

System Check_Head_2600MHz

DUT: D2600V2-1008

Communication System: CW; Frequency: 2600 MHz;Duty Cycle: 1:1
Medium: HSL_2600_190810 Medium parameters used: f = 2600 MHz; σ = 2.012 S/m; ε_r = 39.497; ρ = 1000 kg/m^3
Ambient Temperature：23.6 ℃; Liquid Temperature：22.6 ℃

DASY5 Configuration:
- Probe: EX3DV4 - SN7515; ConvF(7.37, 7.37, 7.37) @ 2600 MHz; Calibrated: 2018/10/3
- Sensor-Surface: 1.4mm (Mechanical Surface Detection)
- Electronics: DAE4 Sn853; Calibrated: 2019/7/18
- Phantom: SAM_Left; Type: QD000P40CD; Serial: TP:1477
- Measurement SW: DASY52, Version 52.10 (2);SEMCAD X Version 14.6.12 (7470)

Pin=250mW/Area Scan (81x81x1): Interpolated grid: dx=1.200 mm, dy=1.200 mm
Maximum value of SAR (interpolated) = 24.4 W/kg

Pin=250mW/Zoom Scan (7x7x7)/Cube 0: Measurement grid: dx=5mm, dy=5mm, dz=5mm
Reference Value = 112.6 V/m; Power Drift = -0.02 dB
Peak SAR (extrapolated) = 31.0 W/kg
SAR(1 g) = 14.4 W/kg; SAR(10 g) = 6.54 W/kg
Maximum value of SAR (measured) = 24.6 W/kg

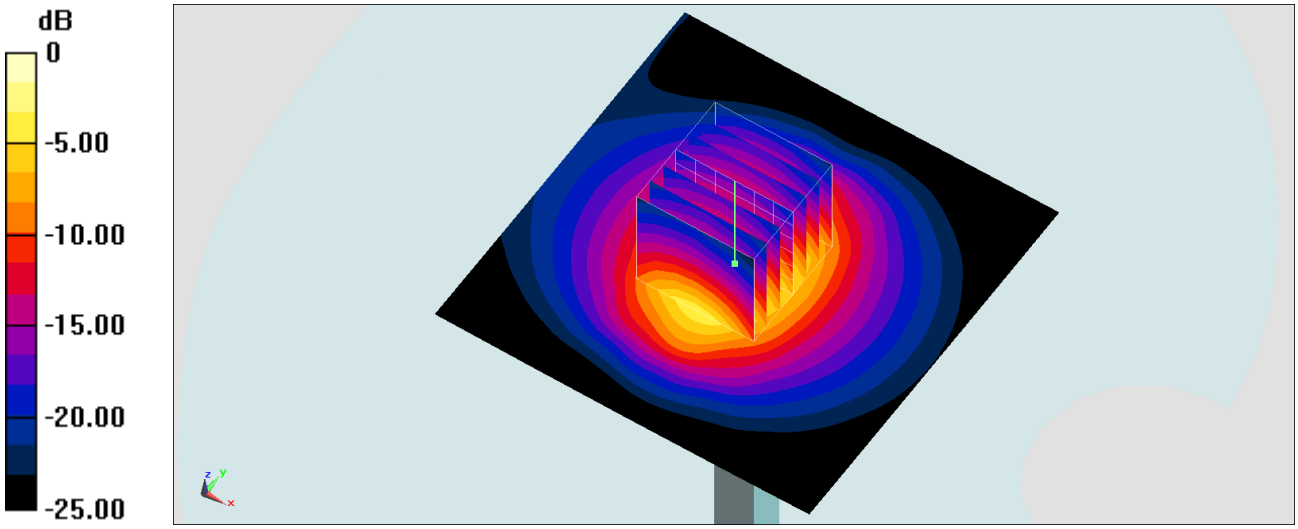

0 dB = 24.6 W/kg = 13.91 dBW/kg

System Check_Head_5250MHz

DUT: D5GHzV2-1128

Communication System: CW; Frequency: 5250 MHz;Duty Cycle: 1:1
Medium: HSL_5G_190826 Medium parameters used : f = 5250 MHz; σ = 4.556 S/m; ε_r = 35.737; ρ = 1000 kg/m^3
Ambient Temperature：23.9 ℃; Liquid Temperature：22.9 ℃

DASY5 Configuration:
- Probe: EX3DV4 - SN7515; ConvF(5.45, 5.45, 5.45) @ 5250 MHz; Calibrated: 2018/10/3
- Sensor-Surface: 1.4mm (Mechanical Surface Detection)
- Electronics: DAE4 Sn853; Calibrated: 2019/7/18
- Phantom: SAM_Right; Type: SAM; Serial: TP:1681
- Measurement SW: DASY52, Version 52.10 (2);SEMCAD X Version 14.6.12 (7470)

Pin=100mW/Area Scan (71x71x1): Interpolated grid: dx=1.000 mm, dy=1.000 mm
Maximum value of SAR (interpolated) = 17.4 W/kg

Pin=100mW/Zoom Scan (7x7x7)/Cube 0: Measurement grid: dx=4mm, dy=4mm, dz=1.4mm
Reference Value = 70.16 V/m; Power Drift = 0.12 dB
Peak SAR (extrapolated) = 28.8 W/kg
SAR(1 g) = 7.27 W/kg; SAR(10 g) = 2.03 W/kg
Maximum value of SAR (measured) = 17.8 W/kg

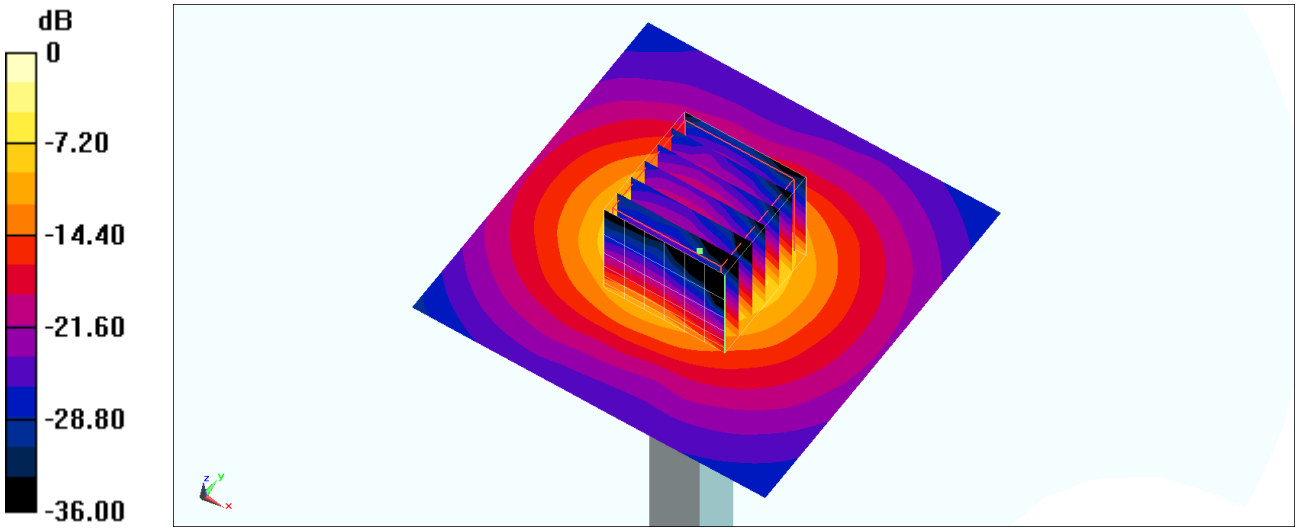

0 dB = 17.8 W/kg = 12.50 dBW/kg

System Check_Head_5250MHz

DUT: D5GHzV2-1128

Communication System: CW; Frequency: 5250 MHz;Duty Cycle: 1:1
Medium: HSL_5G_190828 Medium parameters used : f = 5250 MHz; σ = 4.567 S/m; ε_r = 35.825; ρ = 1000 kg/m^3
Ambient Temperature：23.6 ℃; Liquid Temperature：22.6 ℃

DASY5 Configuration:
- Probe: EX3DV4 - SN7515; ConvF(5.45, 5.45, 5.45) @ 5250 MHz; Calibrated: 2018/10/3
- Sensor-Surface: 1.4mm (Mechanical Surface Detection)
- Electronics: DAE4 Sn853; Calibrated: 2019/7/18
- Phantom: SAM_Right; Type: SAM; Serial: TP:1681
- Measurement SW: DASY52, Version 52.10 (2);SEMCAD X Version 14.6.12 (7470)

Pin=100mW/Area Scan (71x71x1): Interpolated grid: dx=1.000 mm, dy=1.000 mm
Maximum value of SAR (interpolated) = 17.5 W/kg

Pin=100mW/Zoom Scan (7x7x7)/Cube 0: Measurement grid: dx=4mm, dy=4mm, dz=1.4mm
Reference Value = 70.16 V/m; Power Drift = 0.15 dB
Peak SAR (extrapolated) = 28.9 W/kg
SAR(1 g) = 7.28 W/kg; SAR(10 g) = 2.03 W/kg
Maximum value of SAR (measured) = 17.9 W/kg

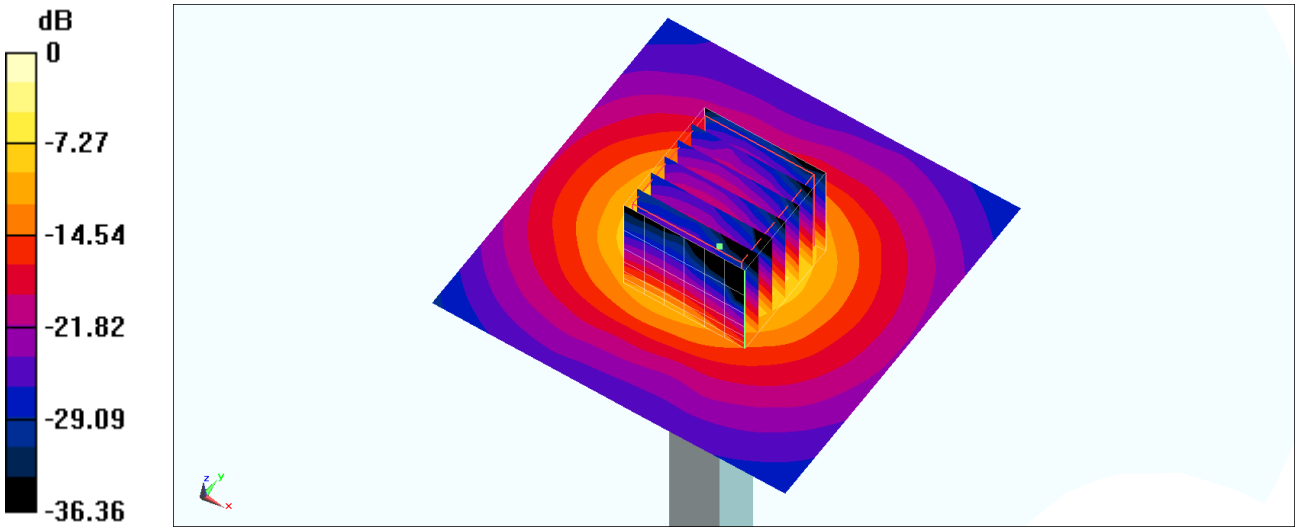

0 dB = 17.9 W/kg = 12.53 dBW/kg

System Check_Head_5250MHz

DUT: D5GHzV2-1128

Communication System: CW; Frequency: 5250 MHz;Duty Cycle: 1:1
Medium: HSL_5G_190829 Medium parameters used : f = 5250 MHz; σ = 4.603 S/m; ε_r = 36.065; ρ = 1000 kg/m^3
Ambient Temperature：23.3 ℃; Liquid Temperature：22.3 ℃

DASY5 Configuration:
- Probe: EX3DV4 - SN7515; ConvF(5.45, 5.45, 5.45) @ 5250 MHz; Calibrated: 2018/10/3
- Sensor-Surface: 1.4mm (Mechanical Surface Detection)
- Electronics: DAE4 Sn853; Calibrated: 2019/7/18
- Phantom: SAM_Right; Type: SAM; Serial: TP:1681
- Measurement SW: DASY52, Version 52.10 (2);SEMCAD X Version 14.6.12 (7470)

Pin=100mW/Area Scan (71x71x1): Interpolated grid: dx=1.000 mm, dy=1.000 mm
Maximum value of SAR (interpolated) = 17.6 W/kg

Pin=100mW/Zoom Scan (7x7x7)/Cube 0: Measurement grid: dx=4mm, dy=4mm, dz=1.4mm
Reference Value = 70.16 V/m; Power Drift = 0.11 dB
Peak SAR (extrapolated) = 29.1 W/kg
SAR(1 g) = 7.34 W/kg; SAR(10 g) = 2.05 W/kg
Maximum value of SAR (measured) = 18.0 W/kg

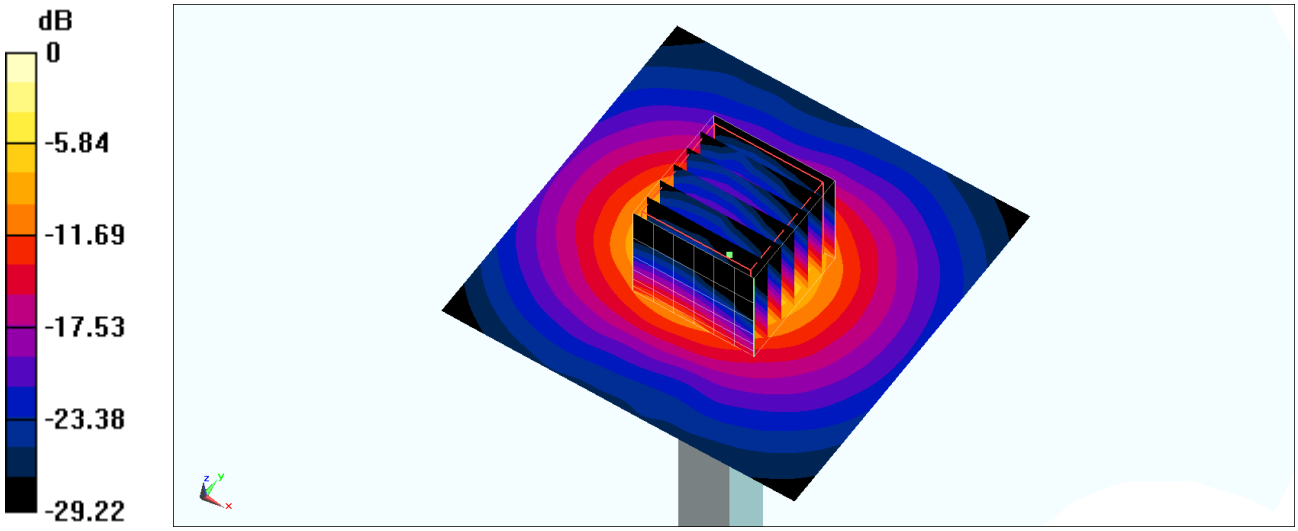

0 dB = 18.0 W/kg = 12.55 dBW/kg

System Check_Head_5600MHz

DUT: D5GHzV2-1128

Communication System: CW; Frequency: 5600 MHz;Duty Cycle: 1:1
Medium: HSL_5G_190826 Medium parameters used: f = 5600 MHz; σ = 4.87 S/m; ε_r = 35.307; ρ = 1000 kg/m^3
Ambient Temperature：23.9 ℃; Liquid Temperature：22.9 ℃

DASY5 Configuration:
- Probe: EX3DV4 - SN7515; ConvF(4.83, 4.83, 4.83) @ 5600 MHz; Calibrated: 2018/10/3
- Sensor-Surface: 1.4mm (Mechanical Surface Detection)
- Electronics: DAE4 Sn853; Calibrated: 2019/7/18
- Phantom: SAM_Right; Type: SAM; Serial: TP:1681
- Measurement SW: DASY52, Version 52.10 (2);SEMCAD X Version 14.6.12 (7470)

Pin=100mW/Area Scan (71x71x1): Interpolated grid: dx=1.000 mm, dy=1.000 mm
Maximum value of SAR (interpolated) = 20.3 W/kg

Pin=100mW/Zoom Scan (7x7x7)/Cube 0: Measurement grid: dx=4mm, dy=4mm, dz=1.4mm
Reference Value = 72.16 V/m; Power Drift = 0.065 dB
Peak SAR (extrapolated) = 35.7 W/kg
SAR(1 g) = 8.35 W/kg; SAR(10 g) = 2.31 W/kg
Maximum value of SAR (measured) = 21.0 W/kg

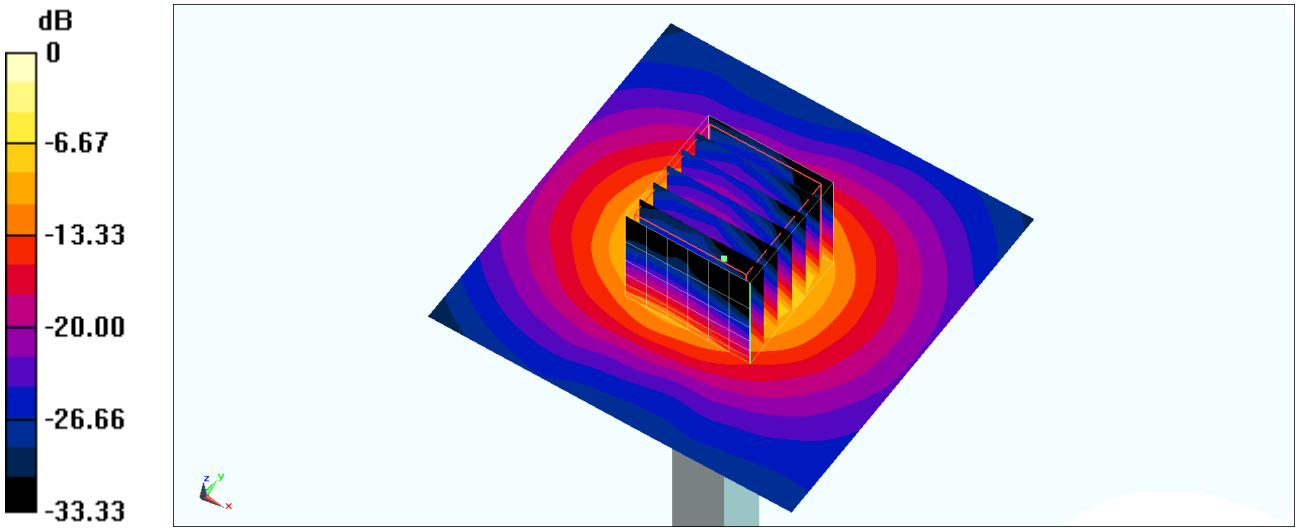

0 dB = 21.0 W/kg = 13.22 dBW/kg

System Check_Head_5600MHz

DUT: D5GHzV2-1128

Communication System: CW; Frequency: 5600 MHz;Duty Cycle: 1:1
Medium: HSL_5G_190828 Medium parameters used: f = 5600 MHz; σ = 4.883 S/m; ε_r = 35.395; ρ = 1000 kg/m^3
Ambient Temperature：23.6 ℃; Liquid Temperature：22.6 ℃

DASY5 Configuration:
- Probe: EX3DV4 - SN7515; ConvF(4.83, 4.83, 4.83) @ 5600 MHz; Calibrated: 2018/10/3
- Sensor-Surface: 1.4mm (Mechanical Surface Detection)
- Electronics: DAE4 Sn853; Calibrated: 2019/7/18
- Phantom: SAM_Right; Type: SAM; Serial: TP:1681
- Measurement SW: DASY52, Version 52.10 (2);SEMCAD X Version 14.6.12 (7470)

Pin=100mW/Area Scan (71x71x1): Interpolated grid: dx=1.000 mm, dy=1.000 mm
Maximum value of SAR (interpolated) = 20.3 W/kg

Pin=100mW/Zoom Scan (7x7x7)/Cube 0: Measurement grid: dx=4mm, dy=4mm, dz=1.4mm
Reference Value = 72.16 V/m; Power Drift = 0.03 dB
Peak SAR (extrapolated) = 35.8 W/kg
SAR(1 g) = 8.38 W/kg; SAR(10 g) = 2.32 W/kg
Maximum value of SAR (measured) = 21.1 W/kg

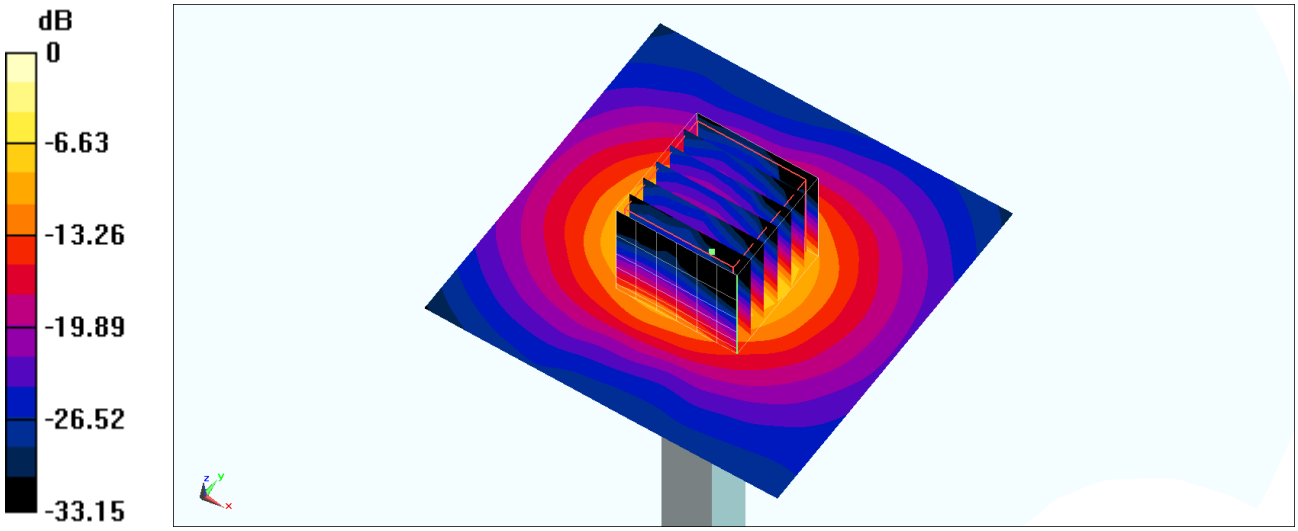

0 dB = 21.1 W/kg = 13.24 dBW/kg

System Check_Head_5750MHz

DUT: D5GHzV2-1128

Communication System: CW; Frequency: 5750 MHz;Duty Cycle: 1:1
Medium: HSL_5G_190826 Medium parameters used: f = 5750 MHz; σ = 5.029 S/m; ε_r = 35.107; ρ = 1000 kg/m^3
Ambient Temperature：23.9 ℃; Liquid Temperature：22.9 ℃

DASY5 Configuration:
- Probe: EX3DV4 - SN7515; ConvF(4.95, 4.95, 4.95) @ 5750 MHz; Calibrated: 2018/10/3
- Sensor-Surface: 1.4mm (Mechanical Surface Detection)
- Electronics: DAE4 Sn853; Calibrated: 2019/7/18
- Phantom: SAM_Right; Type: SAM; Serial: TP:1681
- Measurement SW: DASY52, Version 52.10 (2);SEMCAD X Version 14.6.12 (7470)

Pin=100mW/Area Scan (71x71x1): Interpolated grid: dx=1.000 mm, dy=1.000 mm
Maximum value of SAR (interpolated) = 19.3 W/kg

Pin=100mW/Zoom Scan (7x7x7)/Cube 0: Measurement grid: dx=4mm, dy=4mm, dz=1.4mm
Reference Value = 68.86 V/m; Power Drift = 0.09 dB
Peak SAR (extrapolated) = 34.9 W/kg
SAR(1 g) = 7.88 W/kg; SAR(10 g) = 2.19 W/kg
Maximum value of SAR (measured) = 20.0 W/kg

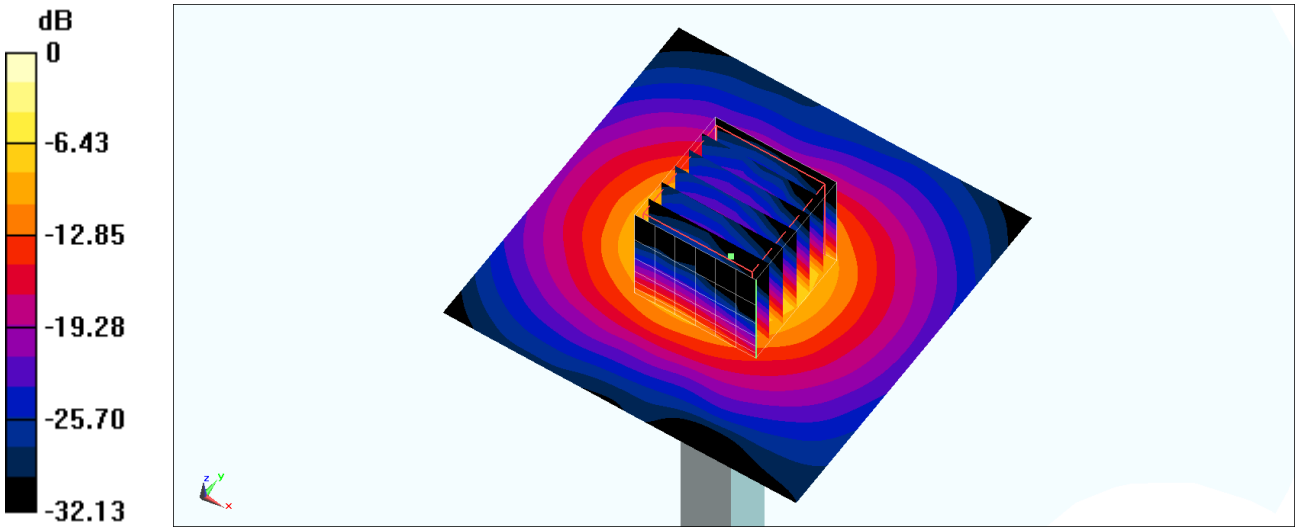

0 dB = 20.0 W/kg = 13.01 dBW/kg

System Check_Head_5750MHz

DUT: D5GHzV2-1128

Communication System: CW; Frequency: 5750 MHz;Duty Cycle: 1:1
Medium: HSL_5G_190828 Medium parameters used: f = 5750 MHz; σ = 5.042 S/m; ε_r = 35.195; ρ = 1000 kg/m^3
Ambient Temperature：23.6 ℃; Liquid Temperature：22.6 ℃

DASY5 Configuration:
- Probe: EX3DV4 - SN7515; ConvF(4.95, 4.95, 4.95) @ 5750 MHz; Calibrated: 2018/10/3
- Sensor-Surface: 1.4mm (Mechanical Surface Detection)
- Electronics: DAE4 Sn853; Calibrated: 2019/7/18
- Phantom: SAM_Right; Type: SAM; Serial: TP:1681
- Measurement SW: DASY52, Version 52.10 (2);SEMCAD X Version 14.6.12 (7470)

Pin=100mW/Area Scan (71x71x1): Interpolated grid: dx=1.000 mm, dy=1.000 mm
Maximum value of SAR (interpolated) = 19.3 W/kg

Pin=100mW/Zoom Scan (7x7x7)/Cube 0: Measurement grid: dx=4mm, dy=4mm, dz=1.4mm
Reference Value = 68.86 V/m; Power Drift = 0.12 dB
Peak SAR (extrapolated) = 35.0 W/kg
SAR(1 g) = 7.89 W/kg; SAR(10 g) = 2.19 W/kg
Maximum value of SAR (measured) = 20.1 W/kg

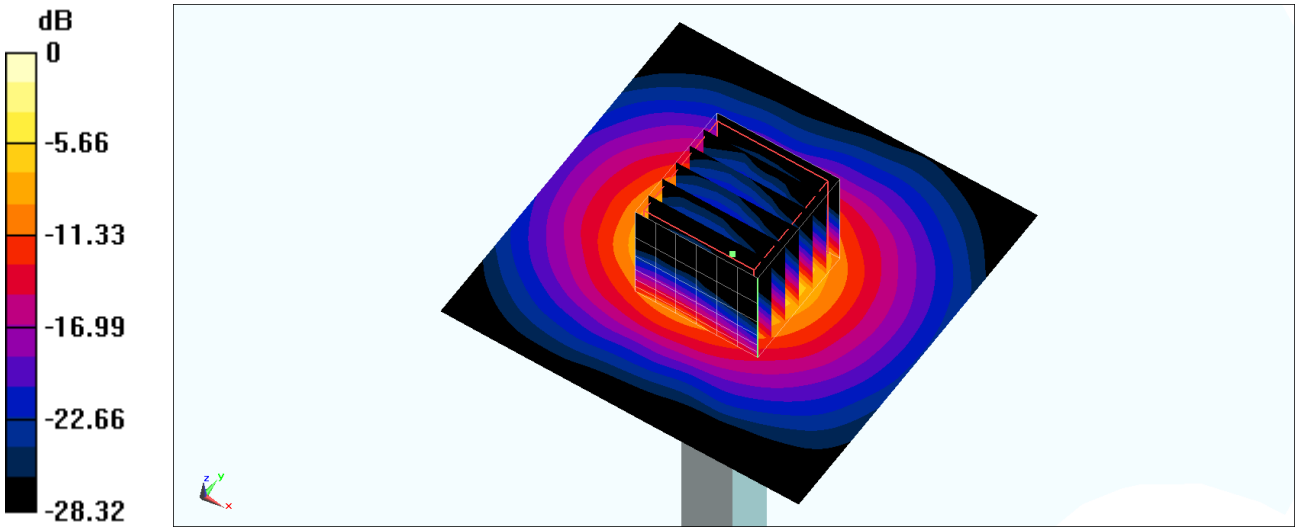

0 dB = 20.1 W/kg = 13.03 dBW/kg

System Check_Head_5750MHz

DUT: D5GHzV2-1128

Communication System: CW; Frequency: 5750 MHz;Duty Cycle: 1:1
Medium: HSL_5G_190829 Medium parameters used: f = 5750 MHz; σ = 5.08 S/m; ε_r = 35.435; ρ = 1000 kg/m^3
Ambient Temperature：23.3 ℃; Liquid Temperature：22.3 ℃

DASY5 Configuration:
- Probe: EX3DV4 - SN7515; ConvF(4.95, 4.95, 4.95) @ 5750 MHz; Calibrated: 2018/10/3
- Sensor-Surface: 1.4mm (Mechanical Surface Detection)
- Electronics: DAE4 Sn853; Calibrated: 2019/7/18
- Phantom: SAM_Right; Type: SAM; Serial: TP:1681
- Measurement SW: DASY52, Version 52.10 (2);SEMCAD X Version 14.6.12 (7470)

Pin=100mW/Area Scan (71x71x1): Interpolated grid: dx=1.000 mm, dy=1.000 mm
Maximum value of SAR (interpolated) = 19.5 W/kg

Pin=100mW/Zoom Scan (7x7x7)/Cube 0: Measurement grid: dx=4mm, dy=4mm, dz=1.4mm
Reference Value = 68.86 V/m; Power Drift = -0.15 dB
Peak SAR (extrapolated) = 35.2 W/kg
SAR(1 g) = 7.95 W/kg; SAR(10 g) = 2.21 W/kg
Maximum value of SAR (measured) = 20.2 W/kg

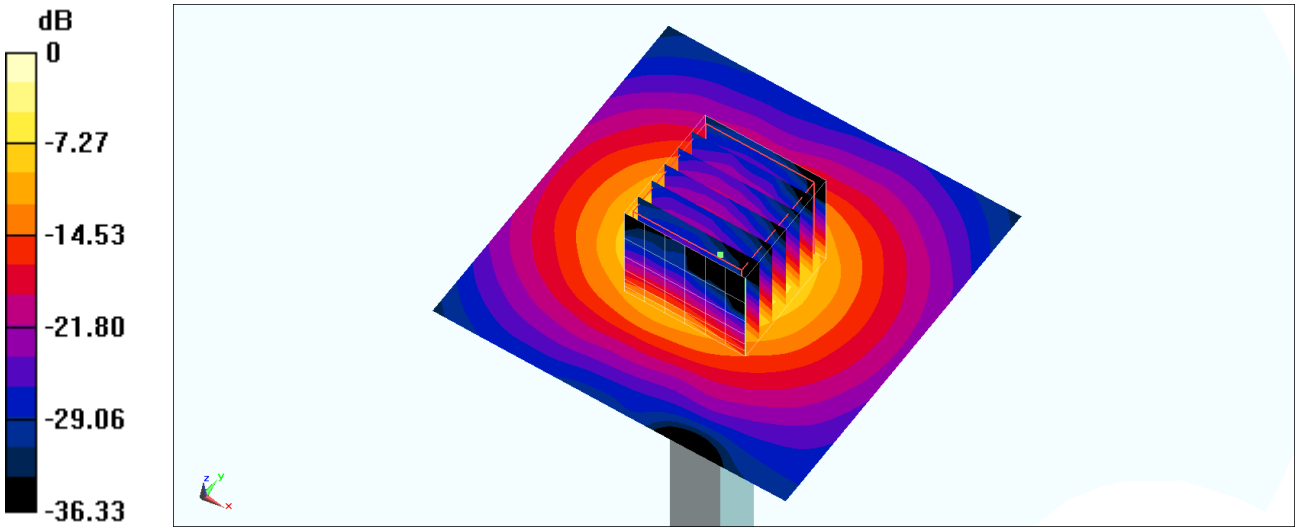

0 dB = 20.2 W/kg = 13.05 dBW/kg