PARTIAL T E S T R E P O R T
No.: 18-1-0096701T01a_C02

According to:

FCC Regulations
Part 15.205
Part 15.209
Part 15.247
ISED-Regulations
RSS-Gen, Issue 4
RSS-247, Issue 2

for

Datalogic S.r.l.

Joya Touch A6
Type: A00AN04HLXGT0AN

FCC ID: U4GJTADG
ISED ID: 3862E-JTADG
HVIN JTADG GUN
HVIN JTADG HH

Laboratory Accreditation and Listings		
Accredited EMC-Test Laboratory	Industry Canada Reg. No.: 3462D-1 Reg. No.: 3462D-2 Reg. No.: 3462D-3	Voluntary Controls for Electromagnetic Emissions Reg. No.: R-4552, C-20009, T-20006, G-20013
AUTHORIZED RF LABORATORY	Lab Code: 20011130-00	MRA US-EU 0003
accredited according to DIN EN ISO/IEC 17025		

CETECOM GmbH
Laboratory Radio Communications & Electromagnetic Compatibility
Im Teelbruch 116 • 45219 Essen • Germany
Registered in Essen, Germany, Reg. No.: HRB Essen 8984
Tel.: + 49 (0) 20 54 / 95 19-954 • Fax: + 49 (0) 20 54 / 95 19-964
E-mail: info@cetecom.com • Internet: www.cetecom.com

The test results relate only to the individual items which have been tested. This report shall not be reproduced in parts without the written approval of the testing laboratory © Copyright: All rights reserved by CETECOM

Table of contents

1. SUMMARY OF TEST RESULTS....3

1.1. Tests measurement overview according to FCC Standard and ISED (RSS) Standard 3

2. ADMINISTRATIVE DATA 5

2.1. Identification of the testing laboratory....5
2.2. Test location 5
2.3. Organizational items....5
2.4. Applicant's details 5
2.5. Manufacturer's details 5

3. EQUIPMENT UNDER TEST (EUT)....6

3.1. Certification Data of Main EUT declared by Applicant 6
3.2. Bluetooth LE Technical Data of Main EUT as Declared by Applicant....7
3.3. EUT: Type, S/N etc. and short descriptions used in this test report 8
3.4. Auxiliary Equipment (AE): Type, S/N etc. and short descriptions....8
3.5. EUT set-ups 8
3.6. EUT operating modes 9
3.7.Worst case selection 9

4. DESCRIPTION OF TEST SYSTEM SET-UP'S 10

4.1. Test system set-up for conducted measurements on antenna port 10
4.2. Test system set-up for radiated magnetic field measurements below 30 MHz....11
4.3. Test system set-up for radiated electric field measurement 30 MHz to 1 GHz 12
4.4. Test system set-up for radiated electric field measurement above 1 GHz 13

5. MEASUREMENTS 14

5.1. Duty-Cycle....14
5.2. RF-Parameter – RF Power conducted....15
5.3. General Limit - Radiated field strength emissions below 30 MHz....17
5.4. General Limit - Radiated field strength emissions. 30 MHz - 1 GHz....19
5.5. General Limit - Radiated emissions. above 1 GHz....21
5.6. **RF-Parameter - Radiated Band Edge compliance measurements** 23
5.7. Measurement uncertainties 25

6. ABBREVIATIONS USED IN THIS REPORT 26

7. ACCREDITATION DETAILS OF CETECOM'S LABORATORIES AND TEST SITES 26

8. INSTRUMENTS AND ANCILLARY....27

TC" 27

9. VERSIONS OF TEST REPORTS (CHANGE HISTORY) 30

Table of Annex

Annex No.	Contents	Reference Description	Total Pages
Annex 1	Test results	**CETECOM_TR18-1-0096701T02a-A1**	18
Annex 2	External photographs of EUT	**JTA6DG External Pictures**	11
Annex 3	Internal photographs of EUT	**Internal Pictures JOYA TOUCH A6 DG**	8
Annex 4	Test set-up photographs	**CETECOM_TR18-1-0050701T02-A4**	7
The listed attachments are an integral part of this report.			

1. Summary of test results

The test results apply exclusively to the test samples as presented in this Report. The CETECOM GmbH does not assume responsibility for any conclusions and generalizations taken in conjunction with other specimens or samples of the type of the item presented to tests.

The test results apply exclusively to the test samples as presented in this report. The CETECOM GmbH does not assume responsibility for any conclusions and generalizations taken in conjunction with other specimens or samples of the type of the item presented to tests. Also we refer on special conditions which the applicant should fulfill according §2.927 to §2.948, special focus regarding modification of the equipment and availability of sample equipment for market surveillance tests.

The presented Equipment Under Test(in this report, hereinafter referred as EUT) : **Joya Touch** integrates total 1 of pre-certified module **SIMT 1502 (FCC ID: UDV-20170406)** & supports following technologies :

EUT supported Technologies which are not tested within this test report

EUT supported Technology	Test Report Reference
Bluetooth FHSS (BR-EDR) Modes: 2402 – 2480 MHz	CETECOM_TR18-1-0050701T02a_C01
WLAN 802.11b/g/n(HT20) Modes: 2412 – 2462 MHz	CETECOM_TR18-1-0050701T03a
WLAN 802.11a/n(HT20)/n(HT40)Modes: 5150–5850 MHz	CETECOM_TR18-1-0050701T04a_C01

EUT supported Technologies which are tested within this test report

- **2.4 GHz Bluetooth Low Energy Modes : 2402 – 2480 MHz**

Following test cases have been performed to show compliance with valid RSS-Gen, Issue 4 & RSS-247, Issue 2 of the ISED Regulations and Part 15.205/15.209/15.247 of the FCC CFR Title 47 Rules, Edition 4th November 2016.

1.1. Tests measurement overview according to FCC Standard and ISED (RSS) Standard

Test cases	Port	References and Limits			EUT set-up	EUT op. mode	Result
		FCC Standard	RSS Standard	Test limit			
	TX-Mode						
6 dB bandwidth	Antenna terminal (conducted)	§15.247 (a) (2)	RSS-247, Issue 2: Chapter 5.2 a	At least 500 kHz	--	--	Remark 2)
99% occupied bandwidth	Antenna terminal (conducted)	2.1049(h)	RSS-Gen, Issue 4: Chapter 6.6	99% Power bandwidth	--	--	Remark 2)
Transmitter Peak output power	Antenna terminal (conducted)	§15.247 (b) (3)	RSS-247, Issue 2: Chapter 5.4 d	< 1 W	1	1	Pass
Power Spectral Density	Antenna terminal (conducted)	§15.247 (e)	RSS-247, Issue 2: Chapter 5.2 + 5.4 d	< 8 dBm in 3 kHz band	--	--	Remark 2)
Transmitter frequency stability	Antenna terminal (conducted)	--	RSS-Gen, Issue 4: Chapter 6.11	Operation within designated operational band	--	--	Not tested
Transmitter Peak output power radiated	Enclosure (radiated)	§15.247 (b) (3)	RSS-247, Issue 2: Chapter 5.4 d + e	< 1 W for antenna with directional gain less than 6 dBi.	--	--	Remark 2)
Out-Of-Band RF- emissions	Antenna terminal (conducted)	§15.247 (d)	RSS-247, Issue 2, Chapter 5.5	20 dBc Conducted Emissions in restricted bands	--	--	Remark 2)

Band-Edge emissions	Enclosure (radiated)	§15.247 (d)	RSS-247, Issue 2, Chapter 5.5 RSS-Gen: Issue 4: §8.9 Table 4+5+6	Emissions in restricted bands must meet the general field strength radiated limits	2	1	Pass
General field strength emissions + restricted bands	Enclosure + Interconnecting cables (radiated)	§15.247 (d) §15.205 §15.209	RSS-247, Issue 2, Chapter 5.5 RSS-Gen: Issue 4: §8.9 Table 4+5+6	Emissions in restricted bands must meet the general field-strength radiated limits	2	1	Pass
AC-Power Lines Conducted Emissions	AC-Power lines or Battery Charger	§15.207(a)	RSS-Gen, Issue 4: Chapter 8.8 Table 3	AC Power line conducted limits	--	--	Remark 1)

Remark 1) **: Not tested in this report as Bluetooth test configuration was operated using fully charged internal battery**
Refer separate report 18-1-0050701T05a
Remark 2): Refer SIMT 1502 (FCC ID: UDV-20170406) Report No**.** ER/2017/50042, issue date Jul. 21,2017

Specific Absorption Rate (SAR) Measurements (separation distance user to RF-radiating element within 20cm)						
Test cases	**Port**	**References & Limits**		**EUT set-up**	**EUT op. mode**	**Result**
		FCC Standard	**Test Limit**			
Specific Absorption Rate (SAR) requirements	Cabinet + Inter-connecting cables (radiated)	§2.1091 §2.1093 + IEEE 1528-2013 + KDB 865664D01v0r04	**Specific Absorption Rate (SAR)** for Devices Used by the General Public **(Uncontrolled Environment)** **:** 1.6 W/Kg as averaged over any 1 g tissue	--	--	Refer separate report CETECOM_TR**18-1-0050701T01a**

Test report 18-1-0096701T01a_C02 dated 2018-09-25 replace test report 18-1-0096701T01a, dated 2018-09-07. The replaced report gets invalid herewith.

1.1.1. Attestation:
I declare that all measurements were performed by me or under my supervision and that all measurements have been performed and are correct to my best knowledge and belief to Innovation , Science and Economic Development (ISED) Canada standards. All requirements as shown in above table are met in accordance with enumerated standards.

Digital unterschrieben von Niels Jeß
DN: cn=Niels Jeß, o=CETECOM GmbH, ou=Branch Duesseldorf, email=niels.jess@cetecom.com, c=DE
Datum: 2018.09.25 23:17:37 +02'00'

.....
Dipl.-Ing. Niels Jeß
Responsible for test section

Digital unterschrieben von B.Sc. Mohamed Ahmed
DN: cn=B.Sc. Mohamed Ahmed, o=Cetecom GmbH, ou=RC/EMC, email=mohamed.ahmed@cetecom.com, c=DE
Datum: 2018.09.26 09:12:14 +02'00'

.....
B.Sc. Mohamed Ahmed
Responsible for test report

2. Administrative Data

2.1. Identification of the testing laboratory

Company name:	CETECOM GmbH
Address:	Im Teelbruch 116 45219 Essen - Kettwig Germany
Responsible for testing laboratory:	Dipl.-Ing. Rachid Acharkaoui
Deputy:	Dipl.-Ing. Niels Jeß

2.2. Test location

2.2.1. Test laboratory "CTC"

Company name:	see chapter 2.1. Identification of the testing laboratory

2.3. Organizational items

Responsible for test report:	B.Sc. Mohamed Ahmed
Responsible for project:	Dipl.-Ing. Ninovic Perez
Receipt of EUT:	2018-04-16
Date(s) of test:	2018-04-16 - 2018-05-20
Date of report:	2018-09-25
Version of template: 13.02	

2.4. Applicant's details

Applicant's name:	Datalogic S.r.l.
Address:	Via S. Vitalino, 13 40012, Lippo di Calderara di Reno (BO) ITALY
Contact:	Mr. Francesco Rossi

2.5. Manufacturer's details

Manufacturer's name:	same as Applicant
Address:	same as Applicant

3. Equipment under test (EUT)

3.1. Certification Data of Main EUT declared by Applicant

EUT Model	**Joya Touch A6**		
EUT Model Type	**A6**		
EUT Type	**Portable Mobile Computer**		
EUT Applications	**Shopping Applications & General Purpose Mobile Computer**		
FCC ID	**U4GJTADG**		
ISED ID	**3862E-JTADG**		
Additional Information: Integrated Module			
Integrated Module	**SIMT 1502**		
Module Certification FCC ID	**UDV-20170406**		
Number of Integrated Modules	**1**		
Additional Information : Supported Technologies			
Technology	**Modes**	**Frequency Range**	**Remarks**
Bluetooth LE	**Bluetooth Low Energy**	**2402 MHz – 2480 MHz**	refer chapter 3.2
Bluetooth FHSS	**Bluetooth BR-EDR**	**2402 MHz – 2480 MHz**	not tested under this report
WLAN 2.4 GHz	**WLAN 802.11b/g/n(HT20)**	**2412 MHz – 2462 MHz**	not tested under this report
WLAN 5 GHz	**WLAN 802.11a/n(HT20)**	**5150 MHz –5850 MHz**	not tested under this report

3.2. Bluetooth LE Technical Data of Main EUT as Declared by Applicant

EUT Model	**JOYA TOUCH A6**		
EUT Model Type	**A00AN04HLXHT0AN-NY0**		
EUT Type	**Portable Mobile Computer**		
EUT Applications	**Shopping applications & general purpose mobile computer**		
Hardware Version	**BETA**		
Software Version	**Android 6**		
Firmware Version	**02.12**		
Frequency Band	2.4 GHz ISM Band (2400 MHz - 2483.5 MHz)		
Frequency Channels (Range)	Channel 37: 2402 MHz to Channel 39: 2480 MHz		
Number of Channels	40 (37 Hopping + 3 Advertising)		
Channels Power Settings	+7 dBm (According to Applicant's Declaration Max. Rated Power Values)		
Nominal Channel Bandwidth	1 MHz		
Type of DSSS Mode Modulation | Data Rate	Low Energy (LE) Mode : ☒ BT 4.0: GFSK | 1 Mbps		
Antenna Details	Integrated (ANT1)		
Antenna Connections	Primary Antenna : ANT1 (BT LE)		
Antenna Type	PCB Antenna		
ANT1 Gain (Peak)	2.14 dBi (2400 MHz – 2500 MHz) (According to Applicant's Declaration)		
Total Number of Modules	1 (**SIMT 1502** Module FCC ID: **UDV-20170406**)		
Total Number of Antennas	1	Primary Antenna : ANT1 (BT LE)	
Test Mode Settings	Datalogic RFTest Application		
MAX Field Strength (Radiated@3m)	**Peak Value : 97.464 dBµV/m**	**Average Value: 89.446 dBµV/m** **with Duty Cycle Correction : 1.99 dB**	
Power Supply	☒ Internal Battery: Li-ion | 3.75- 4.35VDC 3030mAh		
Special EMI Components	--		
EUT Sample Type	☒ Production	☐ Pre-Production	☐ Engineering
Firmware	☐ for normal use	☒ Special version for test execution : Datalogic RFTest	
FCC label attached	☐ Yes	☒ No	

For further details refer Applicants Declaration & following technical documents		
Description of Reference Document (supplied by applicant)	Version	Total Pages
JTA: Test Instructions	Rev: 01 Date: 17-05-2018	18

3.3. EUT: Type, S/N etc. and short descriptions used in this test report

Short Descrip-tion*)	EUT	Type	Serial Number	Hardware Status	Software Status
EUT A	Joya Touch A6 (Gun Variant)	A00AN04HLXGT0AN	G18D03791	Beta	02.12
EUT B	Joya Touch A6 (Gun Variant)	A00AN04HLXGT0AN	G18D03796	Beta	02.12
EUT C	Joya Touch A6 [Handheld Variant)	A00AN04HLXHT0AN	G18D03794	Beta	02.12

*) EUT short description is used to simplify the identification of the EUT in this test report.

3.4. Auxiliary Equipment (AE): Type, S/N etc. and short descriptions

AE short descrip-tion *)	Auxiliary Equipment	Type	S/N serial number	HW hardware status	SW software status
AE 1	--	--	--	--	--

*) AE short description is used to simplify the identification of the auxiliary equipment in this test report.

3.5. EUT set-ups

EUT set-up no.*)	Combination of EUT and AE	Description
set. 1	EUT A	Used for conducted tests
set. 2	EUT B	Used for radiated tests
set. 3	EUT C	Used for radiated tests (handheld variant)

*) EUT set-up no. is used to simplify the identification of the EUT set-up in this test report.

3.6. EUT operating modes

EUT operating mode no.*)	Description of operating modes	Additional information
op. 1	Bluetooth Low Energy Modes* TX-Fixed Channel (Modulated)	For Bluetooth Low Energy Modes tests are carried out with different Channels | Modulation | Data Rate Combinations with help of Datalogic RFTest Application. The EUT was put to **Fixed Channel (Modulated) Continuous transmissions mode | Pattern Length : 37 | PRBS9** with help of Datalogic RFTest Application. (CTA-WIFI Test Tool, Version: 1.0.0) **(Channel Type | Frequency | Power Settings)** **Lowest Channel : 0 : 2402 MHz | Power : +7 dBm** **Middle Channel :19: 2440 MHz | Power : +7 dBm** **Highest Channel :39: 2480 MHz | Power : +7 dBm**

*1) EUT operating mode no. is used to simplify the test report.
*2)) Please refer to document "20180613_FCC_JTA_Test-Tools_Quick_Start_Instructions" dated 2018-06-13 for additional information regarding operating mode setup and output power levels.

The Test Software CTA-WIFI Test Tool was implemented on the EUT

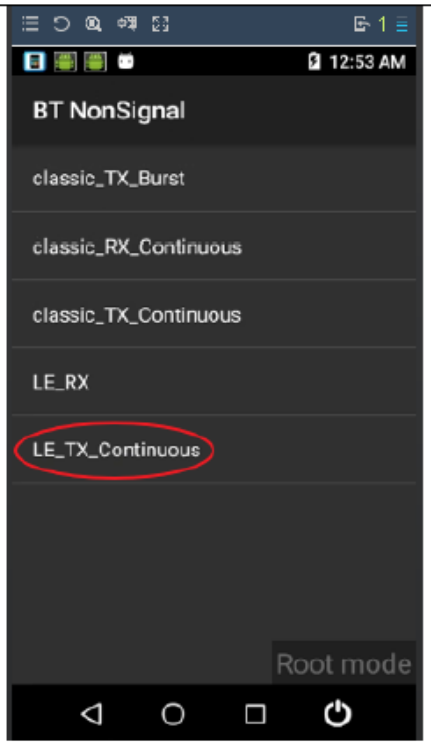

3.7.Worst case selection

For the Handheld variant only spot checks were tested

4. Description of test system set-up's

4.1. Test system set-up for conducted measurements on antenna port

Bluetooth conducted RF-Setup 1 (BT1 Set-up)

General description: The EUT's RF-signal is coupled out by a suitable antenna coupling connector (1). The signal is first attenuated (2) then connected to the power meter (3) for conducted power measurements. The specific attenuation loss is determined prior to the measurement within a set-up attenuation measurement. These are then taken into account by correcting the measurement readings.

Schematic:

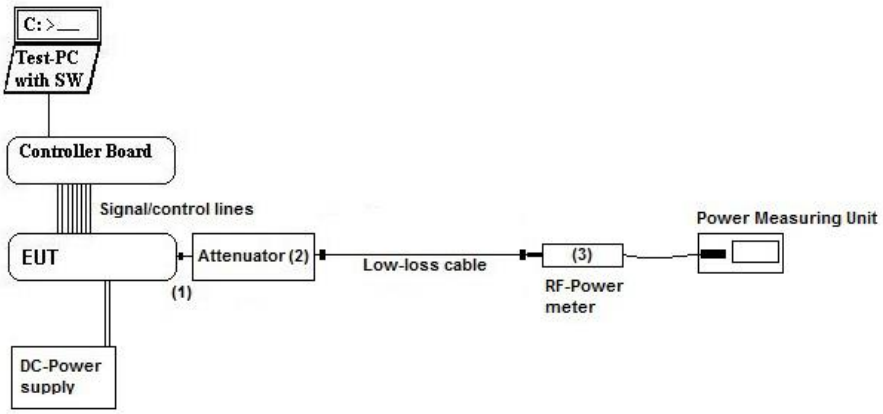

Testing method: ANSI C63.10:2013, KDB 558074 D01 DTS Meas.Guidance v04

Used Equipment

Passive Elements	Test Equipment	Remark:
☒ 20 dB Attenuator ☒ Low loss RF-cables	☒ Power Meter ☐ DC-Power Supply ☐ Spectrum- Analyser	See List of equipment under each test case and chapter 8 for calibration info

Measurement uncertainty See chapter 5.7

4.2. Test system set-up for radiated magnetic field measurements below 30 MHz

Specification: ANSI C63.10-2013 chapter 6.4 (§6.4.4.2)

General Description: Evaluating the radiated field emissions are done first by an exploratory emission measurement and a final measurement for most critical frequencies determined.

The loop antenna was placed at 1 m height above ground plane and 3 m measurement distance from set-up for investigations. Because of reduced measurement distance, correction data were applied, as stated in chapter "General Limit - Radiated field strength emissions below 30 MHz". The tests are performed in the semi anechoic room recognized by the regulatory commission.

Schematic:

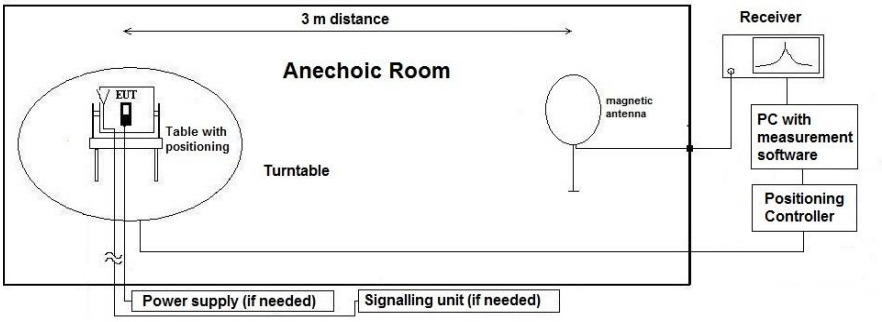

Testing method:

Exploratory, preliminary measurement
The EUT and it's associated accessories are placed on a non-conductive position manipulator (tipping device) of 0.8 m height which is placed on the turntable. By rotating the turntable (step 90°, range 0°to 360°) and the EUT itself either on 3-orthogonal axis (portable equipment) or 2-orthogonal axis (defined operational position of EUT), the emission spectrum was recorded. The loop antenna was moved at least to 2-perpendicular axes (antenna vector in direction of EUT and parallel to EUT) in order to maximize the emissions. The results are documented in a diagram. Critical frequencies (low margin to limit) are saved within a data reduction table for further investigations. If various operating modes are supported, further investigations are made to find the worst-case. Also the interconnection cables and equipment position were varied in order to maximize the emissions.

Final measurement on critical frequencies
Based on the exploratory measurements, the most critical frequencies are re-measured by maintaining the EUT's worst-case operation mode, cable position, etc.

First a frequency zoom around the critical frequency is done to locate the frequency more precisely. After this step, for all identified critical frequencies, the maximum peak was determined.

Following parameters were varied: the turntable angle continuously in the range 0 to 360 degree, the EUT itself either over 3-orthogonal axis (not defined usage position) or 2-orthogonal axis (defined usage position).

On the determined worst-case position, a final measurement with necessary bandwidth and detector according standard has been carried out.

Formula:

$E_C = E_R + AF + C_L + D_F - G_A$

$M = L_T - E_C$

AF =Antenna factor
C_L = Cable loss
D_F= Distance correction factor
E_C = Electrical field – corrected value
E_R = Receiver reading
G_A= Gain of pre-amplifier (if used)
L_T = Limit
M = Margin

All units are dB-units, positive margin means value is below limit.

Distance correction:

Reference for applied correction (extrapolating) factors due to reduced measurement distance:
ANSI C63.10:2013, §6.4.4.2 - Equations (2) + (3) + (4)

4.3. Test system set-up for radiated electric field measurement 30 MHz to 1 GHz

Specification: ANSI C63.4-2014 chapter 8.2.3, ANSI C63.10-2013 chapter 6.5

General Description: Evaluating the field emissions have to be done first by an exploratory emissions measurement and a final measurement for most critical frequencies. The tests are performed in a NSA-compliant semi anechoic room (SAR) recognized by the regulatory commissions.

Schematic:

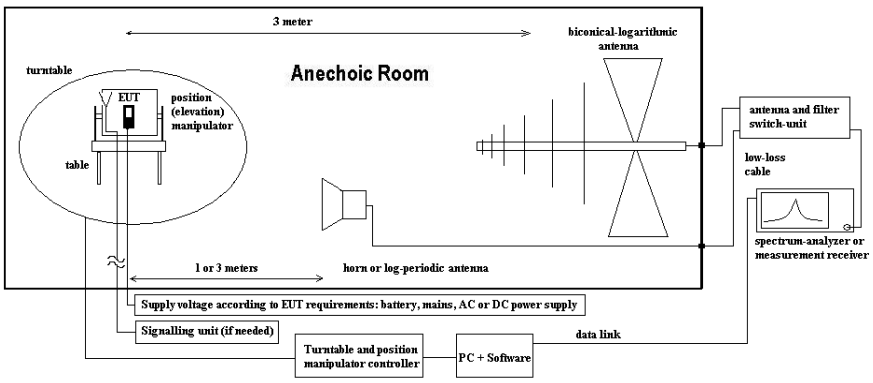

Testing method:

Exploratory, preliminary measurements
The EUT and its associated accessories are placed on a non-conductive position manipulator (tipping device) of 0.8 m height which is placed on the turntable. By rotating the turntable (range 0° to 360°, step 90°) and the EUT itself either on 3-orthogonal axis (portable equipment) or 2-orthogonal axis (defined operational position of EUT) the emission spectrum and it's characteristics was recorded with an EMI-receiver, broadband antenna and software.

Measurement antenna: horizontal and vertical, heights: 1,0 m and 1,82 m as worst-case determined by an exploratory emission measurements. The results are documented in a diagram. Critical frequencies (low margin to limit) are saved within a table for further investigations. If various operating modes are supported, further investigations are made to find the worst-case of them. Also the interconnection cables and equipment position were varied in order to maximize the emissions.

Final measurement on critical frequencies
Based on the exploratory measurements, the most critical frequencies are re-measured by maintaining the EUT's worst-case operation mode, cable position, etc. either on 10m OATS or 3m semi-anechoic room.

First a frequency zoom around the critical frequency is done to locate the frequency more precisely. After this step, for all identified critical frequencies, the maximum peak was determined.

Following parameters were varied: the turntable angle continuously in the range 0 to 360 degree, the EUT itself either over 3-orthogonal axis (not defined usage position) or 2-orthogonal axis (defined usage position). The measurement antenna height between 1 m and 4 m.

On the determined worst-case position, a final measurement with necessary bandwidth and detector according standard has been carried out.

Formula:

$E_C = E_R + AF + C_L + D_F - G_A$ (1)

$M = L_T - E_C$ (2)

AF = Antenna factor
C_L = Cable loss
D_F = Distance correction factor (if used)
E_C = Electrical field – corrected value
E_R = Receiver reading
G_A = Gain of pre-amplifier (if used)
L_T = Limit
M = Margin

All units are dB-units, positive margin means value is below limit.

4.4. Test system set-up for radiated electric field measurement above 1 GHz

Specification: ANSI C63.4-2014 chapter 8.3, ANSI C63.10-2013 chapter 6.6.3.3 & 6.6.4

General Description: Evaluating the emissions have to be done first by an exploratory emissions measurement and a final measurement for most critical frequencies. The tests are performed in a CISPR 16-1-4:2010 compliant fully anechoic room (FAR) recognized by the regulatory commission. The measurement distance was set to 3 meter for frequencies up to 18 GHz and 2 meter above 18 GHz. A logarithmic periodic antenna is used for the frequency range 30 MHz to 1 GHz. Horn antennas are used for frequency range 1 GHz to 40 GHz. The EUT is aligned within 3 dB beam width of the measurement antenna with three orthogonal axis measurements on the EUT.

Schematic:

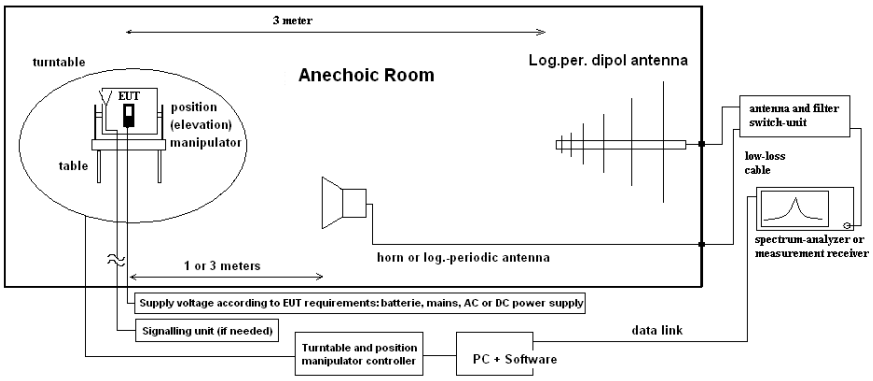

Testing method:

Exploratory, preliminary measurements
The EUT and its associated accessories are placed on a non-conductive position manipulator (tipping device) of 1.55 m height which is placed on the turntable. By rotating the turntable (range 0° to 360°, step 15°) and the EUT itself either on 3-orthogonal axis (portable equipment) or 2-orthogonal axis (defined operational position of EUT) the emission spectrum and it's characteristics was recorded with an EMI-receiver, broadband antenna and software.
The measurements are performed in horizontal and vertical polarization of the measurement antennas. The results are documented in a diagram. Critical frequencies (low margin to limit) are saved within a table for further investigations. If various operating modes are supported, further investigations are made to find the worst-case of them. Also the interconnection cables and equipment position were varied in order to maximize the emissions.

Final measurement on critical frequencies
Based on the exploratory measurements, the most critical frequencies are re-measured by maintaining the EUT's worst-case operation mode, cable position, etc.

First a frequency zoom around the critical frequency is done to locate the frequency more precisely. After this step, for all identified critical frequencies, the maximum peak was determined. Following parameters were varied: the turntable angle continuously in the range 0 to 360 degree, the EUT itself over 3-orthogonal axis and the height for EUT with large dimensions.

On the determined worst-case position, a final measurement with necessary bandwidth and detector according standard has been carried out.
On the determined worst-case position, a final measurement with necessary bandwidth and detector according standard has been carried out.

Formula:

$E_C = E_R + AF + C_L + D_F - G_A$ (1)

$M = L_T - E_C$ (2)

E_C = Electrical field – corrected value
E_R = Receiver reading
M = Margin
L_T = Limit
AF = Antenna factor
C_L = Cable loss
D_F = Distance correction factor (if used)
G_A = Gain of pre-amplifier (if used)

All units are dB-units, positive margin means value is below limit.

5. Measurements

5.1. Duty-Cycle

5.1.1. Test location and equipment (for reference numbers please see chapter 'List of test equipment')

Ambient Climatic conditions		Temperature: (22±2)°C		Rel. humidity: (45±15)%		
Test Site	☐ 441 EMI SAR	☐ 348 EMI cond.	☐ 443 EMI FAR	☒ 347 Radio.lab.	☐ 337 OATS	☐
Equipment	☐ 331 HC 4055	☐	☐	☐	☐	☐
Spectr. Analys.	☒ 683 FSU26	☐ 120 FSEM	☐ 264 FSEK	☒ 693 TS8997	☐	☐
Power Meter	☐ 262 NRV-S	☐ 266 NRV-Z31	☐ 265 NRV-Z33	☐ 261 NRV-Z55	☐ 356 NRV-Z1	☐
Multimeter	☐ 341 Fluke 112	☐	☐	☐	☐	☐
DC Power	☐ 086 LNG50-10	☐ 087 EA3013	☐ 354 NGPE 40	☐ 349 car battery	☐ 350 Car battery	☐ 463 HP3245A
Supply Voltage	☐ 230 V 50 Hz via public mains		☒ 4.20 V DC (fully charged internal battery)			
Otherwise	☒ 530 Attenuator 10dB	☒ K4 Cable				

Method of measurement: ☒ conducted
☐ radiated

A special firmware program is used for test purposes. In contrast to normal operating mode a higher duty-cycle is set in order to facilitate the measurements. This is maximized at the extent possible.

The necessary duty-cycle correction factor is determined on nominal conditions on 1 channel for all sub-bands. It is assumed that no noticeable changes occur when tested on other channels or climatic conditions.

Calculated with following formulas:

Duty cycle:	$x = \frac{Tx_{on}}{Tx_{on} + Tx_{off}}$	Duty cycle factor [dB]:	$10\log\left(\frac{1}{x}\right)$

Results:

Set-up No.:	1
Op. Mode:	1

DUTY-CYCLE Measurement								
BT-LE	**Marker 1**	**Marker 2**	**Marker 3**	**TX ON** Marker 2 - Marker 1	**TX OFF** Marker 3 - Marker 2	**Duty Cycle**	**Correction-Factor: 100log(1/DC)**	**Plot No.**
Data Rate	ms	ms	ms	ms	ms	(%)	(dB)	(Remark 1)
WLAN 2.4 GHz b-Mode| B.W. 20 MHz | SISO | Ch 6 (2437 MHz) | 20 dBm								
1MBit	0,038462	0,428118	0,663462	0,38966	0,23534	**62,35**	**2,05**	1

Remark 1: For further details please refer → Annex 1: Test results - CETECOM_TR18-1-0050701T02a-A1

☒ The results were corrected in order to evaluate for worst-case result each time when average values are necessary for example average radiated emissions or similar
☐ No correction necessary: Duty-Cycle > 98%

5.2. RF-Parameter – RF Power conducted

5.2.1. Test location and equipment (for reference numbers please see chapter 'List of test equipment')

test location	☒ CETECOM Essen (Chapter. 2.2.1)		☐ 443 System CTC-FAR-EMI-		☐ Please see Chapter. 2.2.3	
test site	☐ 441 EMI SAR	☐ 487 SAR NSA	☐ 337 OATS	☒ 347 Radio.lab.	☐	☐
receiver	☐ 377 ESCS30	☐ 001 ESS	☒ 683 FSU 26	☐	☐	☐
spectr. analys.	☐ 489 ESU	☐ 120 FSEM	☐ 264 FSEK	☐	☐	☐
power supply	☐ 456 EA 3013A	☐ 457 EA 3013A	☐ 459 EA 2032-50	☒ 4.20 V DC (fully charged internal battery)		
otherwise	☒ 613 20dB Attenuator			☐ Directional Coupler 1539R-10		
Power meter	☒ 600 NRVD Power meter			☒ 266 NRV-Z31 Peak Power Sensor		
Supply voltage	☐ 230 V 50 Hz via public mains			☐		

5.2.2. Requirements:

FCC	☒ §15.247 (b) (3) + KDB 558074 D01 DTS Meas.Guidance v04
ISED	☒ RSS-247, Issue 2: Chapter 5.4 d + KDB 558074 D01 DTS Meas.Guidance v04
ANSI	☒ C63.10-2013 Chapter 6.101

5.2.3. Reference: EUT antenna characteristics:

☒ Directional Gain < 6 dBi (measured: difference between measured conducted and radiated eirp. power)
☐ Directional Gain > 6 dBi (measured / applicant's declaration) -> conducted power reduction necessary

5.2.4. EUT settings:

For FHHS-systems hopping mode was switched-off so fixed three different channels could be measured. The EUT was instructed to send with maximum power (if adjustable) according applicants instructions. Different modulation characteristics have been checked, e.g. data rates which EUT can operate.

5.2.5. Measurement method:

The measurement was performed in non-hopping transmission mode with the carrier set to lowest/middle and highest channel. The power was also checked for different data rates, modulation scheme or packet types if applicable.

5.2.6. Settings on Spectrum-Analyzer:

Center Frequency	Nominal channel frequency
Span	8 MHz
Resolution Bandwidth (RBW)	3 MHz > 20dB-Bandwidth of the signal
Video Bandwidth (VBW)	3 times the resolution bandwidth = 10MHz
Sweep time	coupled
Detector	Peak, Max hold mode
Sweep Mode	Repetitive mode

5.2.7. Conducted measurement: Max. Peak Power

- Applicant's declared Maximum Directional ANT1 Peak Gain :2.14 dBi

Conducted Max Peak Power Measurements [dBm]			
Set-up no.: 2 Op-Mode: 1	Low channel = 0 (2402 MHz)	Middle channel = 19 (2442 MHz)	High channel = 78 (2480 MHz)
Bluetooth LE Mode GFSK| 1 Mbps Pattern Length:37 | PRBS9	1.06	2.49	-0.14
Remark **:** Measurements results are only valid and compliant with power setting: +7 dBm			
Maximum Conducted value	**2.49 dBm**	**0.00177 W**	
Maximum antenna ANT1 gain	2.14 dBi		
Maximum e.i.r.p. value	**4.63 dBm**	**0,002904 W**	
FCC 15.247 Limit	**30.00 dBm**	**1 W**	

5.3. General Limit - Radiated field strength emissions below 30 MHz

5.3.1. Test location and equipment

test location	☒ CETECOM Essen (Chapter. 2.2.1)		☐ Please see Chapter. 2.2.2		☐ Please see Chapter. 2.2.3	
test site	☒ 441 EMI SAR	☐ 487 SAR NSA	☐ 347 Radio.lab.		☐	☐
receiver	☐ 377 ESCS30	☒ 001 ESS	☐	☐	☐	☐
spectr. analys.	☐ 584 FSU	☐ 120 FSEM	☐ 264 FSEK	☐	☐	☐
antenna	☐ 574 BTA-L	☒ 021 EMCO6502	☐ 302 BBHA9170	☐ 289 CBL 6141	☐ 030 HFH-Z2	☐ 477 GPS
signaling	☐ 392 MT8820A	☐ 371 CBT32	☐ 547 CMU	☐ 594 CMW		
otherwise	☐ 400 FTC40x15E	☐ 401 FTC40x15E	☐ 110 USB LWL	☐ 482 Filter Matrix	☐ 378 RadiSense	
DC power	☐ 671 EA-3013S	☐ 457 EA 3013A	☐ 459 EA 2032-50	☐ 268 EA- 3050	☐ 494 AG6632A	☐ 498 NGPE 40
Supply voltage	☐ 230 V 50 Hz via public mains		☒ 4.2 V DC (fully charged internal battery)			

5.3.2. Requirements

FCC	☒ Part 15. Subpart C. §15.205 & §15.209		☒ Part 15.247 (d)	
ISED	RSS-Gen: Issue 4: §8.9 Table 5 RSS-247, Issue 2, Chapter 5.5			
ANSI	C63.10-2013			
Frequency [MHz]	Field strength limit [µV/m]	[dBµV/m]	Distance [m]	Remarks
0.009 – 0.490	2400/f (kHz)	67.6 – 20Log(f) (kHz)	300	Correction factor used due to measurement distance of 3 m
0.490 – 1.705	24000/f (kHz)	87.6 – 20Log(f) (kHz)	30	Correction factor used due to measurement distance of 3 m
1.705 – 30	30	29.5	30	Correction factor used due to measurement distance of 3 m

5.3.3. Test condition and test set-up

Signal link to test system (if used):		☐ air link	☐ cable connection	☐ none
EUT-grounding		☒ none	☐ with power supply	☐ additional connection
Equipment set up		☒ table top		☐ floor standing
Climatic conditions		Temperature: (22±3°C)		Rel. humidity: (40±20)%
EMI-Receiver or Analyzer Settings	Scan data	☒ 9 – 150 kHz RBW/VBW = 200 Hz Scan step = 80 Hz ☒ 150 kHz – 30 MHz RBW/VBW = 9 kHz Scan step = 4 kHz ☐ other:		
	Scan-Mode Detector Mode: Sweep-Time	☒ 6 dB EMI-Receiver Mode ☐ 3dB Spectrum analyser Mode Peak (pre-measurement) and Quasi-PK/Average (final if applicable) Repetitive-Scan. max-hold Coupled – calibrated display if continuous signal otherwise adapted to EUT's individual transmission duty-cycle		
General measurement procedures		Please see chapter "Test system set-up radiated magnetic field measurements below 30 MHz"		

5.3.4. Radiated Field Strength Emissions – 9 kHz to 30 MHz Results

Radiated Field Strength Emissions – 9 kHz to 30 MHz							
Temperature :+21 °C	**Technology: Bluetooth LE Modes**			**TX-Fixed Channel (Modulated)**			
Diagram No. (Remark 1)	Test Settings Modulation | Data Rate| Pattern Details | Test Channel	Set-up no.	OP-mode no.	Used detector			Verdict
				PK	AV	QP	
2.10a	GFSK | 1 Mbps | Pattern Length:37 | PRBS9 Mid Channel : 2442 MHz | horizontal	2	1	☒	☐	☐	**Pass**
2.10b	GFSK | 1 Mbps | Pattern Length:37 | PRBS9 Mid Channel : 2442 MHz| vertical	2	1	☒	☐	☐	**Pass**
2.01	GFSK | 1 Mbps | Pattern Length:37 | PRBS9 Mid Channel 38: 2426 MHz| horizontal	3	1	☒	☐	☐	**Pass**
Remark 1: For further details please refer → Annex 1: Test results - CETECOM_TR18-1-0050701T02a-A1 Remark 2**:** Measurements results are only valid and compliant with power setting: +7 dBm							

5.3.5. Correction factors due to reduced meas. distance (f< 30 MHz)

The used correction factors when the measurement distance is reduced compared to regulatory measurement distance. are calculated according Extrapolation formulas valid for EUT's with maximum dimension of 0.625xLambda. Formula 2+3+4 as presented in ANSI C63.10. Chapter 6.4.4 are used for the calculations of proper extrapolation factors.

Frequency -Range	f [kHz/MHz]	Lambda [m]	Far-Field Point [m]	Distance Limit accord. 15.209 [m]	1st Condition (dmeas< $D_{near\text{-}field}$)	2'te Condition (Limit distance bigger $d_{near\text{-}field}$)	Distance Correction accord. Formula
kHz	9,00E+03	33333,33	5305,17	300	fullfilled	not fullfilled	-80,00
	1,00E+04	30000,00	4774,65		fullfilled	not fullfilled	-80,00
	2,00E+04	15000,00	2387,33		fullfilled	not fullfilled	-80,00
	3,00E+04	10000,00	1591,55		fullfilled	not fullfilled	-80,00
	4,00E+04	7500,00	1193,66		fullfilled	not fullfilled	-80,00
	5,00E+04	6000,00	954,93		fullfilled	not fullfilled	-80,00
	6,00E+04	5000,00	795,78		fullfilled	not fullfilled	-80,00
	7,00E+04	4285,71	682,09		fullfilled	not fullfilled	-80,00
	8,00E+04	3750,00	596,83		fullfilled	not fullfilled	-80,00
	9,00E+04	3333,33	530,52		fullfilled	not fullfilled	-80,00
	1,00E+05	3000,00	477,47		fullfilled	not fullfilled	-80,00
	1,25E+05	2400,00	381,97		fullfilled	not fullfilled	-80,00
	2,00E+05	1500,00	238,73		fullfilled	fullfilled	-78,02
	3,00E+05	1000,00	159,16		fullfilled	fullfilled	-74,49
	4,00E+05	750,00	119,37		fullfilled	fullfilled	-72,00
	4,90E+05	612,24	97,44		fullfilled	fullfilled	-70,23
	5,00E+05	600,00	95,49	30	fullfilled	not fullfilled	-40,00
	6,00E+05	500,00	79,58		fullfilled	not fullfilled	-40,00
	7,00E+05	428,57	68,21		fullfilled	not fullfilled	-40,00
	8,00E+05	375,00	59,68		fullfilled	not fullfilled	-40,00
	9,00E+05	333,33	53,05		fullfilled	not fullfilled	-40,00
MHz	1,00	300,00	47,75		fullfilled	not fullfilled	-40,00
	1,59	188,50	30,00		fullfilled	not fullfilled	-40,00
	2,00	150,00	23,87		fullfilled	fullfilled	-38,02
	3,00	100,00	15,92		fullfilled	fullfilled	-34,49
	4,00	75,00	11,94		fullfilled	fullfilled	-32,00
	5,00	60,00	9,55		fullfilled	fullfilled	-30,06
	6,00	50,00	7,96		fullfilled	fullfilled	-28,47
	7,00	42,86	6,82		fullfilled	fullfilled	-27,13
	8,00	37,50	5,97		fullfilled	fullfilled	-25,97
	9,00	33,33	5,31		fullfilled	fullfilled	-24,95
	10,00	30,00	4,77		fullfilled	fullfilled	-24,04
	10,60	28,30	4,50		fullfilled	fullfilled	-23,53
	11,00	27,27	4,34		fullfilled	fullfilled	-23,21
	12,00	25,00	3,98		fullfilled	fullfilled	-22,45
	13,56	22,12	3,52		fullfilled	fullfilled	-21,39
	15,00	20,00	3,18		fullfilled	fullfilled	-20,51
	15,92	18,85	3,00		fullfilled	fullfilled	-20,00
	17,00	17,65	2,81		not fullfilled	fullfilled	-20,00
	18,00	16,67	2,65		not fullfilled	fullfilled	-20,00
	20,00	15,00	2,39		not fullfilled	fullfilled	-20,00
	21,00	14,29	2,27		not fullfilled	fullfilled	-20,00
	23,00	13,04	2,08		not fullfilled	fullfilled	-20,00
	25,00	12,00	1,91		not fullfilled	fullfilled	-20,00
	27,00	11,11	1,77		not fullfilled	fullfilled	-20,00
	29,00	10,34	1,65		not fullfilled	fullfilled	-20,00
	30,00	10,00	1,59		not fullfilled	fullfilled	-20,00

5.4. General Limit - Radiated field strength emissions. 30 MHz - 1 GHz

5.4.1. Test location and equipment

test location	☒ CETECOM Essen (Chapter. 2.2.1)		☐ Please see Chapter. 2.2.2		☐ Please see Chapter. 2.2.3	
test site	☒ 441 EMI SAR	☒ 487 SAR NSA				
receiver	☐ 377 ESCS30	☒ 001 ESS	☐ 489 ESU 40	☐ 620 ESU 26		
spectr. analys.	☐ 584 FSU	☐ 120 FSEM	☐ 264 FSEK			
antenna	☒ 574 BTA-L	☐ 133 EMCO3115	☐ 302 BBHA9170	☐ 289 CBL 6141	☐ 030 HFH-Z2	☐ 477 GPS
signaling	☐ 392 MT8820A	☐ 371 CBT32	☐ 547 CMU	☐ 594 CMW		
otherwise	☐ 400 FTC40x15E	☐ 401 FTC40x15E	☐ 110 USB LWL	☒ 482 Filter Matrix		
DC power	☐ 671 EA-3013S	☐ 457 EA 3013A	☐ 459 EA 2032-50	☐ 268 EA- 3050	☐ 494 AG6632A	☐ 498 NGPE
Supply voltage	☐ 230 V 50 Hz via public mains		☒ 4.2 V DC (fully charged internal battery)			

5.4.2. Requirements/Limits

FCC		☐ Part 15 Subpart B. §15.109. class B ☒ Part 15 Subpart C. §15.209 @ frequencies defined in §15.205 ☒ Part 15.247 (d)	
ISED		☒ RSS-Gen.. Issue 4. Chapter 8.9. Table 4+6 (licence-exempt radio apparatus) ☐ RSS-Gen.. Issue 4. Chapter 7.1.2. Table 2 (receiver) ☐ ICES-003. Issue 6. Table 5 (Class B) ☒ RSS-247. Issue 2. Chapter 5	
ANSI		☐ C63.4-2014 ☒ C63.10-2013	
Limit	Frequency [MHz]	Radiated emissions limits. 3 meters	
		QUASI Peak [µV/m]	QUASI-Peak [dBµV/m]
	30 - 88	100	40.0
	88 - 216	150	43.5
	216 - 960	200	46.0
	above 960	500	54.0

5.4.3. Restricted bands of operation (FCC §15.205)

MHz	MHz	MHz	GHz
0.090-0.110	16.42-16.423	399.9-410	4.5-5.15
0.495-0.505	16.69475-16.69525	608-614	5.35-5.46
2.1735-2.1905	16.80425-16.80475	960-1240	7.25-7.75
4.125-4.128	25.5-25.67	1300-1427	8.025-8.5
4.20725-4.20775	37.5-38.25	1645.5-1646.5	9.3-9.5
6.215-6.218	73-74.6	1660-1710	10.6-12.7
6.26775-6.26825	74.8-75.2	1718.8-1722.2	13.25-13.4
6.31175-6.31225	108-121.94	2200-2300	14.47-14.5
8.291-8.294	123-138	2310-2390	15.35-16.2
8.362-8.366	149.9-150.05	2483.5-2500	17.7-21.4
8.37625-8.38675	156.52475-156.52525	2690-2900	22.01-23.12
8.41425-8.41475	156.7-156.9	3260-3267	23.6-24.0
12.29-12.293	162.0125-167.17	3332-3339	31.2-31.8
12.51975-12.52025	167.72-173.2	3345.8-3358	36.43-36.5
12.57675-12.57725	240-285	3600-4400	--
13.36-13.41	322-335.4	--	--

5.4.4. Test condition and measurement test set-up

Signal link to test system (if used):		☐ air link	☐ cable connection	☐ none
EUT-grounding		☐ none	☐ with power supply	☐ additional connection
Equipment set up		☒ table top 0.8m height		☐ floor standing
Climatic conditions		Temperature: (22±3°C)		Rel. humidity: (40±20)%
EMI-Receiver (Analyzer) Settings	Scan frequency range:	☒ 30 – 1000 MHz ☐ other:		
	Scan-Mode	☒ 6 dB EMI-Receiver Mode ☐ 3 dB spectrum analyser mode		
	Detector	Peak / Quasi-peak		
	RBW/VBW	100 kHz/300 kHz		
	Mode:	Repetitive-Scan. max-hold		
	Scan step	80 kHz		
	Sweep-Time	Coupled – calibrated display if continuous tx-signal otherwise adapted to EUT's individual duty-cycle		
General measurement procedures		Please see chapter "Test system set-up for electric field measurement in the range 30 MHz to 1 GHz"		

5.4.5. Radiated Field Strength Emissions – 30 MHz to 1 GHz Results

Radiated Field Strength Emissions – 30 MHz to 1 GHz							
Temperature :+21 °C	**Technology: Bluetooth LE Modes**			**TX-Fixed Channel (Modulated)**			
Diagram No. (Remark 1)	Test Settings Modulation | Data Rate| Pattern Details | Test Channel	Set-up no.	OP-mode no.	Used detector			Verdict
				PK	AV	QP	
3.11a	GFSK | 1 Mbps | Pattern Length:37 | PRBS9 Mid Channel 0: 2442 MHz | horizontal	2	1	☒	☐	☒	**Pass**
3.11b	GFSK | 1 Mbps | Pattern Length:37 | PRBS9 Mid Channel 0: 2442 MHz| vertical	2	1	☒	☐	☒	**Pass**
3.01	GFSK | 1 Mbps | Pattern Length:37 | PRBS9 Mid Channel 38: 2426 MHz|	3	1	☒	☐	☒	**Pass**
Remark 1: For further details please refer → Annex 1: Test results - CETECOM_TR18-1-0050701T02a-A1 Remark 2**:** Measurements results are only valid and compliant with power setting: +7 dBm							

5.5. General Limit - Radiated emissions. above 1 GHz

5.5.1. Test location and equipment FAR

test site	☐441 EMI SAR	☐348 EMI cond.	☒443 EMI FAR	☐347 Radio.lab.	☐ 337 OATS	☐
spectr. analys.	☐584 FSU	☐120 FSEM	☐264 FSEK	☒489 ESU 40	☐	☐
antenna meas	☐574 BTA-L	☐289 CBL 6141	☐608 HL 562	☒549 HL025	☒ 302 BBHA9170	☐477 GPS
antenna meas	☐123 HUF-Z2	☐132 HUF-Z3	☐030 HFH-Z2	☒376 BBHA9120E		☐
antenna subst	☐071 HUF-Z2	☐020 EMCO3115	☐063 LP 3146	☐303 BBHA9170		☐
multimeter	☐341 Fluke 112	☐	☐	☐	☐	☐
signaling	☐392 MT8820A	☐371 CBT32	☐547 CMU	☐594 CMW		
DCpower	☐611 E3632A	☐087 EA3013	☐354 NGPE 40	☐349 car battery	☐ 350 Car battery	☐
Supply voltage	☐ 230 V 50 Hz via public mains		☒ 4.2 V DC (fully charged internal battery)			

5.5.2. Requirements/Limits (CLASS B equipment)

FCC	☐ Part 15 Subpart B. §15.109 class B ☒ Part 15 Subpart C. §15.209 for frequencies defined in §15.205 ☒ Part 15.247 (d)			
ISED	☒ RSS-Gen.. Issue 4. Chapter 8.9. Table 4+6 (transmitter licence excempt) ☐ RSS-Gen.. Issue 4. Chapter 8.9. Table 2 (receiver) ☐ ICES-003. Issue 6. Chapter 6.2.2. Table 7 (class B) ☒ RSS-247. Issue 2. Chapter 5			
ANSI	☐ C63.4-2014 ☒ C63.10-2013			
Frequency [MHz]	Limits			
	AV [µV/m]	AV [dBµV/m]	Peak [µV/m]	Peak [dBµV/m] or [dBm/MHz]
RSS-Gen.. Issue 4. §8.10 - Table 6	500	54.0	5000	74.0 dBµV/m

5.5.3. Test condition and measurement test set-up

Signal link to test system (if used):		☐ air link	☐ cable connection	☐ none
EUT-grounding		☒ none	☐ with power supply	☐ additional connection
Equipment set up		☒ table top 1.5m height		☐ floor standing
Climatic conditions		Temperature: (22±3°C)		Rel. humidity: (40±20)%
Spectrum-Analyzer settings	Scan frequency range:	☒ 1 – 18 GHz ☒ 18 – 25 GHz ☐ 18 – 40 GHz ☐ other:		
	Scan-Mode	☒ 6 dB EMI-Receiver Mode ☐ 3 dB Spectrum analyser Mode		
	Detector	Peak and Average		
	RBW/VBW	1 MHz / 3 MHz		
	Mode:	Repetitive-Scan. max-hold		
	Scan step	400 kHz		
	Sweep-Time	Coupled – calibrated display if CW signal otherwise adapted to EUT's individual duty-cycle		
General measurement procedures		Please see chapter "Test system set-up for radiated electric field measurements above 1 GHz"		

5.5.4. Radiated Field Strength Emissions – 1 GHz to 18 GHz Results

Radiated Field Strength Emissions – 1 GHz to 18 GHz							
Temperature :+21 °C	**Technology: Bluetooth LE Modes**			**TX-Fixed Channel (Modulated)**			
Diagram No. (Remark 1)	Test Settings Modulation | Data Rate| Pattern Details | Test Channel	Set-up no.	OP-mode no.	Used detector			Verdict
				PK	AV	QP	
4.01a	GFSK | 1 Mbps | Pattern Length:37 | PRBS9 Mid Channel 0: 2442 MHz	2	1	☒	☒	☐	**Pass**
4.01	GFSK | 1 Mbps | Pattern Length:37 | PRBS9 Mid Channel 38: 2426 MHz|	3	1	☒	☒	☐	**Pass**
Remark 1: For further details please refer → Annex 1: Test results - CETECOM_TR18-1-0050701T02a-A1 Remark 2**:** Measurements results are only valid and compliant with power setting: +7 dBm							

5.5.5. Radiated Field Strength Emissions – 18 GHz to 25 GHz Results

Radiated Field Strength Emissions – 18 GHz to 25 GHz							
Temperature :+21 °C	**Technology: Bluetooth LE Modes**			**TX-Fixed Channel (Modulated)**			
Diagram No. (Remark 1)	Test Settings Modulation | Data Rate| Pattern Details | Test Channel	Set-up no.	OP-mode no.	Used detector			Verdict
				PK	AV	QP	
4.01b	GFSK | 1 Mbps | Pattern Length:37 | PRBS9 Mid Channel 0: 2442 MHz	2	1	☒	☒	☐	**Pass**
4.02	GFSK | 1 Mbps | Pattern Length:37 | PRBS9 Mid Channel 38: 2426 MHz|	3	1	☒	☒	☐	**Pass**
Remark 1: For further details please refer → Annex 1: Test results - CETECOM_TR18-1-0050701T02a-A1 Remark 2**:** Measurements results are only valid and compliant with power setting: +7 dBm							

5.6. RF-Parameter - Radiated Band Edge compliance measurements

5.6.1. Test location and equipment FAR

test site	☐441 EMI SAR	☐348 EMI cond.	☒443 EMI FAR	☐347 Radio.lab.	☐ 337 OATS	☐
spectr. analys.	☐584 FSU	☐120 FSEM	☐264 FSEK	☒489 ESU 40	☐	☐
antenna meas	☐574 BTA-L	☐289 CBL 6141	☐608 HL 562	☒549 HL025	☒ 302 BBHA9170	☐477 GPS
antenna meas	☐123 HUF-Z2	☐132 HUF-Z3	☐030 HFH-Z2	☒376 BBHA9120E		☐
antenna subst	☐071 HUF-Z2	☐020 EMCO3115	☐063 LP 3146	☐303 BBHA9170		☐
multimeter	☐341 Fluke 112	☐	☐	☐	☐	☐
signaling	☐392 MT8820A	☐371 CBT32	☐547 CMU	☐594 CMW		
DCpower	☐611 E3632A	☐087 EA3013	☐354 NGPE 40	☐349 carbattery	☐ 350 Car battery	☐
sSupply voltage	☐ 230 V 50 Hz via public mains		☒ 4.2 V DC (fully charged internal battery)			

5.6.2. Requirements/Limits

FCC	☐ Part 15 Subpart B. §15.109 class B ☒ Part 15 subpart C. §15.209 @ frequencies defined in §15.205 ☒ Part 15.247 (d)
ISED	☒ RSS-247. Issue 2. Chapter 5 ☒ RSS-Gen: Issue 4: §8.9 Table 4+5+6
ANSI	☐ C63.4-2009 ☐ C63.4-2014 ☐ C63.10-2009 ☒ C63.10-2013. Chapter 6.10.6

5.6.3. Test condition and measurement test set-up

Signal ink to test system (if used):		☐ air link	☐ cable connection	☒ none
EUT-grounding		☒ none	☐ with power supply	☐ additional connection
Equipment set up		☒ table top 1.5m height		☐ floor standing
Climatic conditions		Temperature: (22±3°C)		Rel. humidity: (40±20)%
Spectrum-Analyzer settings	Scan frequency range:	☐ 1 – 18 GHz ☐ 18 – 25 GHz ☐ 18 – 40 GHz ☒ other: see diagrams		
	Scan-Mode	☐ 6 dB EMI-Receiver Mode ☒ 3 dB Spectrum analyser Mode		
	Detector	Peak and Average		
	RBW/VBW	Left band-edge: 100kHz/300kHz Right band-edge: 1 MHz / 3 MHz		
	Mode:	Repetitive-Scan. max-hold		
	Scan step	40kHz or 400 kHz		
	Sweep-Time	Coupled – calibrated display if CW signal otherwise adapted to EUT's individual duty-cycle		
General measurement procedures		Please see chapter "Test system set-up for radiated electric field measurements above 1 GHz" for general measurements procedures in anechoic chamber.		

5.6.4. Measurement Method

For uncritical results where a measurement resolution bandwidth of 1MHz can clearly show the compliance without influencing the results. a field strength measurement was performed to show compliance.

For critical results a Marker-Delta marker method was used for showing compliance to restricted bands. The method is according ANSI C63.10:2013. Chapter 6.10.6 "Marker-Delta method".. The method consists of three independent steps:

1. Step: Prior to the measurement the fundamental radiated In-Band field strength was performed. The determined value is used as reference value.

2. Step: Second step consist of finding the relative attenuation between the fundamental emission and the maximum local out-of-band emission (within 2 MHz range around the band edge either on the band-edge directly or some modulation product if the level is greater than that on the band-edge) when measured with lower resolution bandwidth.

3. Step: The delta value recorded in step 2 will be subtracted from value recorded in step 1. thus giving the required field strength at the band-edge. This value must fulfil the requirements for radiated spurious emissions in restricted bands in FCC §15.205 with the general limits of FCC §15.209.

5.6.5. EUT settings

The EUT was set in Hopping OFF mode with maximum power (if adjustable) according to applicants instructions.

5.6.6. Results: for non-restricted bands near-by

5.6.6.1. Non-restricted bands near-by - limits according FCC §15.247 anf RSS-247. Issue 2. Chapter 5.5

Set-up No.:	2 + 3
Op. Mode:	1

Diagramm no.	Channel no.	Restricted band ?	Fundamental Value [dBuV/m]		Peak-Value at Band-Edge [dBuV/m]	Difference [dB]	Limit [dBc]	Margin [dB]	Verdict	Remark:
			Peak-Value	Average-Value						
9.01	0	no	97,350	84,667	52	45,35	20	25,35	PASS	BT_LE_GFSK_1Mbit (Gun variant)
9.03	0	no	97,121	88,244	51,989	45,132	20	25,132	PASS	BT_LE_GFSK_1Mbit (HH variant)

Remark 1: For further details please refer → Annex 1: Test results - CETECOM_TR18-1-0050701T02a-A1
Remark 2**:** Measurements results are only valid and compliant with power setting: +7 dBm

5.6.6.2. Restricted bands near-by §15.205 with limits accord. FCC §15.209 and RSS-Gen. Issue4. Chapter 8.10

Set-up No.:	2 + 3
Op. Mode:	1

Diagramm no.	Channel no.	Restricted band ?	Fundamental Value [dBuV/m]		Value at Band-Edge [dBuV/m]		Limits [dBuV/m]		Duty-Cycle Correction for AV-detector	Margin [dB]		Verdict	Remark:
			Peak-Value	Average-Value	Peak -Value	Average -Value	Peak -Value	Average -Value	[dB]	Peak	Average		
9.02	78	yes	95,237	87,225	58,374	46,381	74	54	2,05	15,626	5,569	PASS	BT_LE_GFSK_1Mbit (Gun variant)
9.04	78	yes	95,038	92,166	58,777	46,567	74	54	2,05	27,433	5,383	PASS	BT_LE_GFSK_1Mbit (HH variant)

Remark 1: For further details please refer → Annex 1: Test results - CETECOM_TR18-1-0050701T02a-A1
Remark 2**:** Measurements results are only valid and compliant with power setting: +7 dBm

5.7. Measurement uncertainties

The reported uncertainties are calculated based on the standard uncertainty multiplied with the appropriate coverage factor **k**. such that a confidence level of approximately 95% is achieved.
For uncertainty determination. each component used in the concrete measurement set-up was taken in account and it's contribution to the overall uncertainty according it's statistical distribution calculated.

Following table shows expectable uncertainties for each measurement type performed.

RF-Measurement	Reference	Frequency range	Calculated uncertainty based on a confidence level of 95%						Remarks
Conducted emissions (U_{CISPR})	CISPR 16-2-1	9 kHz - 150 kHz 150 kHz - 30 MHz	4.0 dB 3.6 dB						-
Radiated emissions Enclosure	CISPR 16-2-3	30 MHz - 1 GHz 1 GHz - 18 GHz	4.2 dB 5.1 dB						E-Field
Disturbance power	CISPR 16-2-2	30 MHz - 300 MHz	-						-
Power Output radiated	-	30 MHz - 4 GHz	3.17 dB						Substitution method
Power Output conducted	-	Set-up No.	Cel-C1	Cel-C2	BT1	W1	W2	--	
		9 kHz - 12.75 GHz	N/A	0.60	0.7	0.25	N/A	--	-
		12.75 - 26.5GHz	N/A	0.82	--	N/A	N/A	--	
Conducted emissions on RF-port	-	9 kHz - 2.8 GHz	0.70	N/A	0.70	N/A	0.69	--	N/A - not applicable
		2.8 GHz - 12.75GHz	1.48	N/A	1.51	N/A	1.43	--	
		12.75 GHz - 18GHz	1.81	N/A	1.83	N/A	1.77	--	
		18 GHz - 26.5GHz	1.83	N/A	1.85	N/A	1.79	--	
Occupied bandwidth	-	9 kHz - 4 GHz	0.1272 ppm (Delta Marker)						Frequency error
			1.0 dB						Power
Emission bandwidth	- -	9 kHz - 4 GHz	0.1272 ppm (Delta Marker)						Frequency error
			See above: 0.70 dB						Power
Frequency stability	-	9 kHz - 20 GHz	0.0636 ppm						-
Radiated emissions Enclosure	-	150 kHz - 30 MHz 30 MHz - 1 GHz 1 GHz - 20 GHz	5.0 dB 4.2 dB 3.17 dB						Magnetic field E-field Substitution

Table: measurement uncertainties. valid for conducted/radiated measurements

6. Abbreviations used in this report

The abbreviations	
ANSI	American National Standards Institute
AV . AVG. CAV	Average detector
EIRP	Equivalent isotropically radiated power. determined within a separate measurement
EGPRS	Enhanced General Packet Radio Service
EUT	Equipment Under Test
FCC	Federal Communications Commission. USA
IC	Industry Canada
n.a.	not applicable
Op-Mode	Operating mode of the equipment
PK	Peak
RBW	resolution bandwidth
RF	Radio frequency
RSS	Radio Standards Specification. Documents from Industry Canada
Rx	Receiver
TCH	Traffic channel
Tx	Transmitter
QP	Quasi peak detector
VBW	Video bandwidth
ERP	Effective radiated power

7. Accreditation details of CETECOM's laboratories and test sites

Ref.-No.	Accreditation Certificate	Valid for laboratory area or test site	Accreditation Body
-	D-PL-12047-01-01	All laboratories and test sites of CETECOM GmbH. Essen	DAkkS. Deutsche Akkreditierungsstelle GmbH
337 487 558 348 348	(MRA US-EU 0003)	Radiated Measurements 30 MHz to 1 GHz. 3 m / 10 m (OATS) Radiated Measurements 30 MHz to 1 GHz. 3 m (SAR) Radiated Measurements above 1 GHz. 3 m (FAR) Mains Ports Conducted Interference Measurements Telecommunication Ports Conducted Interference Measurem.	FCC. Federal Communications Commission Laboratory Division. USA
337 487 550 558	3462D-1 3462D-2 3462D-2 3462D-3	Radiated Measurements 30 MHz to 1 GHz. 3 m / 10 m (OATS) Radiated Measurements 30 MHz to 1 GHz. 3 m (SAR) Radiated Measurements 1 GHz to 6 GHz. 3 m (SAR) Radiated Measurements above 1 GHz. 3 m (FAR)	IC. Industry Canada Certification and Engineering Bureau
487 550 348 348	R-2666 G-301 C-2914 T-1967	Radiated Measurements 30 MHz to 1 GHz. 3 m (SAR) Radiated Measurements 1 GHz to 6 GHz. 3 m (SAR) Mains Ports Conducted Interference Measurements Telecommunication Ports Conducted Interference Measurem.	VCCI. Voluntary Control Council for Interference by Information Technology Equipment. Japan
OATS = Open Area Test Site. SAR = Semi Anechoic Room. FAR = Fully Anechoic Room			

8. Instruments and Ancillary

TC"
The "Ref.-No" in the left column of the following tables allows the clear identification of the laboratory equipment.

8.1.1. Test software and firmware of equipment

Ref.-No.	Equipment	Type	Serial-No.	Version of Firmware or Software during the test
001	EMI Test Receiver	ESS	825132/017	Firm.= 1.21 , OTP=2.0, GRA=2.0
012	Signal Generator (EMS-cond.)	SMY 01	839069/027	Firm.= V 2.02
013	Power Meter (EMS cond.)	NRVD	839111/003	Firm.= V 1.51
017	Digital Radiocommunication Tester	CMD 60 M	844365/014	Firmware = V 3.52 .22.01.99, DECT = D2.87 13.01.99
053	Audio Analyzer	UPA3	860612/022	Firm. V 4.3
119	RT Harmonics Analyzer dig. Flickermeter	B10	G60547	Firm.= V 3.1DHG
140	Signal Generator	SMHU	831314/006	Firm.= 3.21
261	Thermal Power Sensor	NRV-Z55	825083/0008	EPROM-Datum 02.12.04, SE EE 1 B
262	Power Meter	NRV-S	825770/0010	Firm.= 2.6
263	Signal Generator	SMP 04	826190/0007	Firm.=3.21
295	Racal Digital Radio Test Set	6103	1572	UNIT Firmware= 4.04, SW-Main=4.04, SW-BBP=1.04, SW-DSP=1.02, Hardboot=1.02, Softboot=2.02
298	Univ. Radio Communication Tester	CMU 200	832221/091	R&S Test Firmware =3.53 /3.54 (current Testsoftw. f. all band used
323	Digital Radiocommunication Tester	CMD 55	825878/0034	Firm.= 3.52 .22.01.99
335	CTC-EMS-Conducted	System EMS Conducted	-	EMC 32 V 8.52
340	Digital Radiocommunication Tester	CMD 55	849709/037	Firm.= 3.52 .22.01.99
355	Power Meter	URV 5	891310/027	Firm.= 1.31
365	10V Insertion Unit 50 Ohm	URV5-Z2	100880	Eprom Data = 31.03.08
366	Ultra Compact Simulator	UCS 500 M4	V0531100594	Firm. UCS 500=001925/3.06a02, rc=ISMIEC 4.10
371	Bluetooth Tester	CBT32	100153	CBT V5,30+ SW-Option K55, K57
377	EMI Test Receiver	ESCS 30	100160	Firm.= 2.30, OTP= 02.01, GRA= 02.36
378	Broadband RF Field Monitor	RadiSense III	03D00013SNO-08	Firm.= V.03D13
389	Digital Multimeter	Keithley 2000	0583926	Firm. = A13 (Mainboard) A02 (Display)
392	Radio Communication Tester	MT8820A	6K00000788	Firm.= 4.50 #005, IPL=4.01#001,OS=4.02#001, GSM=4.41#013, W-CDMA= 4.54#004, scenario= 4.52#002
436	Univ. Radio Communication Tester	CMU 200	103083	R&S Test Firmware Base=5.14, Mess-Software= GSM:5.14 WCDMA:5.14 (current Testsoftw. F. all band
441	CTC-SAR-EMI Cable Loss	System EMI field (SAR)	-	EMC 32 Version 8.52
442	CTC-SAR-EMS	System EMS field (SAR)	-	EMC 32 Version 8.40
443	CTC-FAR-EMI-RSE	System CTC-FAR-EMI-RSE	-	Spuri 7.2.5 or EMC 32 Ver. 9.15.00
444	CTC-FAR-EMS field	System-EMS-Field (FAR)	-	EMC 32 Version 9.15.00
460	Univ. Radio Communication Tester	CMU 200	108901	R&S Test Firmware Base=5.14, GSM=5.14 WCDMA=5.14 (current Testsoftw.,f. all band to be used,
489	EMI Test Receiver	ESU40	1000-30	Firmware=4.43 SP3, Bios=V5.1-16-3, Spec. =01.00
491	ESD Simulator dito	ESD dito	dito307022	V 2.30
524	Voltage Drop Simulator	VDS 200	0196-16	Software Nr: 000037 Version V4.20a01
526	Burst Generator	EFT 200 A	0496-06	Software Nr. 000034 Version V2.32
527	Micro Pulse Generator	MPG 200 B	0496-05	Software-Nr. 000030 Version V2.43
528	Load Dump Simulator	LD 200B	0496-06	Software-Nr. 000031 Version V2.35a01
546	Univ. Radio Communication Tester	CMU 200	106436	R&S Test Firmware Base=5.14, GSM=5.14 WCDMA=5.14 (current Testsoftw.,f. all band to be used
547	Univ. Radio Communication Tester	CMU 200	835390/014	R&S Test Firmware Base=V5.1403 (current Testsoftw., f. all band used, GSM = 5.14 WCDMA: = 5.14
584	Spectrum Analyzer	FSU 8	100248	2.82_SP3
597	Univ. Radio Communication Tester	CMU 200	100347	R&S Test Firmware Base=5.01, GSM=5.02 WCDMA= not installed, Mainboard= µP1=V.850
598	Spectrum Analyzer	FSEM 30	831259/013	Firmware Bios 3.40 , Analyzer 3.40 Sp 2
607	Signal Generator	SMR 20	832033/011	V1.25
620	EMI Test Receiver	ESU 26	100362	4.43_SP3
642	Wideband Radio Communication Tester	CMW 500	126089	Setup V03.26, Test programm component V03.02.20
670	Univ. Radio Communication Tester	CMU 200	106833	µP1 =V8.50, Firmware = V.20
689	Vector Signal Generator	SMU200	100970	02.20.360.142
692	Bluetooth Tester	CBT 32	100236	CBT V 5.40, FW: V.2.41 (FPGA Digital, V. 3.09 FPGA RF)

8.1.2. Single instruments and test systems

Ref.-No.	Equipment	Type	Serial-No.	Manufacturer	Interval of calibration	Remark	Cal due
001	EMI Test Receiver	ESS	825132/017	Rohde & Schwarz	12 M	-	16.05.2019
005	AC - LISN (50 Ohm/50µH, test site 1)	ESH2-Z5	861741/005	Rohde & Schwarz	12 M	-	16.05.2019
007	Single-Line V-Network (50 Ohm/5µH)	ESH3-Z6	892563/002	Rohde & Schwarz	12 M	-	16.05.2019
009	Power Meter (EMS-radiated)	NRV	863056/017	Rohde & Schwarz	24 M	-	15.05.2019
016	Line Impedance Simulating Network	Op. 24-D	B6366	Spitzenberger+Spies	36 M	-	30.05.2019
021	Loop Antenna (H-Field)	6502	9206-2770	EMCO	36 M	-	30.05.2019
030	Loop Antenna (H-field)	HFH-Z2	879604/026	Rohde & Schwarz	36 M	-	30.05.2019
033	RF-current probe (100kHz-30MHz)	ESH2-Z1	879581/18	Rohde & Schwarz	24 M	-	15.05.2019
057	relay-switch-unit (EMS system)	RSU	494440/002	Rohde & Schwarz	pre-m	1a	
060	power amplifier (DC-2kHz)	PAS 5000	B6363	Spitzenberger+Spies	-	3	
086	DC - power supply, 0 -10 A	LNG 50-10	-	Heinzinger Electronic	pre-m	2	
087	DC - power supply, 0 -5 A	EA-3013 S	-	Elektro Automatik	pre-m	2	
091	USB-LWL-Converter	OLS-1	007/2006	Ing. Büro Scheiba	-	4	
099	passive voltage probe	ESH2-Z3	299.7810.52	Rohde & Schwarz	36 M	-	30.05.2021
100	passive voltage probe	Probe TK 9416	without	Schwarzbeck	36 M	-	30.05.2021
110	USB-LWL-Converter	OLS-1	-	Ing. Büro Scheiba	-	4	
119	RT Harmonics Analyzer dig. Flickermeter	B10	G60547	BOCONSULT	36 M	-	30.05.2019
133	horn antenna 18 GHz (Meas 1)	3115	9012-3629	EMCO	36 M	1c	10.03.2020
134	horn antenna 18 GHz (Subst 2)	3115	9005-3414	EMCO	36 M	-	10.03.2020
136	adjustable dipole antenna (Dipole 1)	3121C-DB4	9105-0697	EMCO	36 M	-	30.04.2018
248	attenuator	SMA 6dB 2W	-	Radiall	pre-m	2	
249	attenuator	SMA 10dB 10W	-	Radiall	pre-m	2	
252	attenuator	N 6dB 12W	-	Radiall	pre-m	2	
256	attenuator	SMA 3dB 2W	-	Radiall	pre-m	2	
257	hybrid	4031C	04491	Narda	pre-m	2	
260	hybrid coupler	4032C	11342	Narda	pre-m	2	
261	Thermal Power Sensor	NRV-Z55	825083/0008	Rohde & Schwarz	24 M	-	30.05.2020
262	Power Meter	NRV-S	825770/0010	Rohde & Schwarz	24 M	-	30.05.2019
263	Signal Generator	SMP 04	826190/0007	Rohde & Schwarz	36 M	-	30.05.2019
265	peak power sensor	NRV-Z33, Model 04	840414/009	Rohde & Schwarz	24 M	-	30.05.2020
266	Peak Power Sensor	NRV-Z31, Model 04	843383/016	Rohde & Schwarz	24 M	-	30.05.2020
267	notch filter GSM 850	WRCA 800/960-6EEK	9	Wainwright GmbH	pre-m	2	
270	termination	1418 N	BB6935	Weinschel	pre-m	2	
271	termination	1418 N	BE6384	Weinschel	pre-m	2	
272	attenuator (20 dB) 50 W	Model 47	BF6239	Weinschel	pre-m	2	
273	attenuator (10 dB) 100 W	Model 48	BF9229	Weinschel	pre-m	2	
274	attenuator (10 dB) 50 W	Model 47 (10 dB) 50 W	BG0321	Weinschel	pre-m	2	
275	DC-Block	Model 7003 (N)	C5129	Weinschel	pre-m	2	
276	DC-Block	Model 7006 (SMA)	C7061	Weinschel	pre-m	2	
279	power divider	1515 (SMA)	LH855	Weinschel	pre-m	2	
298	Univ. Radio Communication Tester	CMU 200	832221/091	Rohde & Schwarz	pre-m	3	
300	AC LISN (50 Ohm/50µH, 1-phase)	ESH3-Z5	892 239/020	Rohde & Schwarz	12 M	-	17.05.2019
301	attenuator (20 dB) 50W, 18GHz	47-20-33	AW0272	Lucas Weinschel	pre-m	2	
302	horn antenna 40 GHz (Meas 1)	BBHA9170	155	Schwarzbeck	36 M	-	14.03.2020
303	horn antenna 40 GHz (Subst 1)	BBHA9170	156	Schwarzbeck	36 M	-	20.03.2020
331	Climatic Test Chamber -40/+180 Grad	HC 4055	43146	Heraeus Vötsch	24 M	-	30.10.2018
341	Digital Multimeter	Fluke 112	81650455	Fluke	24 M	-	30.05.2020
342	Digital Multimeter	Voltcraft M-4660A	IB 255466	Voltcraft	24 M	-	17.05.2019
347	laboratory site	radio lab.	-	-	-	5	
348	laboratory site	EMI conducted	-	-	-	5	
354	DC - Power Supply 40A	NGPE 40/40	448	Rohde & Schwarz	pre-m	2	
357	power sensor	NRV-Z1	861761/002	Rohde & Schwarz	24 M	-	24.05.2019
371	Bluetooth Tester	CBT32	100153	R&S	36 M	-	30.05.2019
373	Single-Line V-Network (50 Ohm/5µH)	ESH3-Z6	100535	Rohde & Schwarz	12 M	-	17.05.2019
377	EMI Test Receiver	ESCS 30	100160	Rohde & Schwarz	12 M	-	30.05.2019
389	Digital Multimeter	Keithley 2000	0583926	Keithley	pre-m	-	
405	Thermo-/Hygrometer	OPUS 10 THI	126.0604.0003.3.3.3.2 2	LUFFT Mess u. Regeltechnik	24 M	-	30.03.2019
431	Model 7405	Near-Field Probe Set	9305-2457	EMCO	-	4	
436	Univ. Radio Communication Tester	CMU 200	103083	Rohde & Schwarz	12 M	-	06.03.2019
439	UltraLog-Antenna	HL 562	100248	Rohde & Schwarz	36 M	-	10.03.2020
454	Oscilloscope	HM 205-3	9210 P 29661	Hameg	-	4	
456	DC-Power supply 0-5 A	EA 3013 S	207810	Elektro Automatik	pre-m	2	
459	DC -Power supply 0-5 A , 0-32 V	EA-PS 2032-50	910722	Elektro Automatik	pre-m	2	
460	Univ. Radio Communication Tester	CMU 200	108901	Rohde & Schwarz	12 M	-	30.05.2019
463	Universal source	HP3245A	2831A03472	Agilent	-	4	
466	Digital Multimeter	Fluke 112	89210157	Fluke USA	24 M	-	30.05.2020
467	Digital Multimeter	Fluke 112	89680306	Fluke USA	36 M	-	30.05.2019
468	Digital Multimeter	Fluke 112	90090455	Fluke USA	36 M	-	30.04.2021
477	ReRadiating GPS-System	AS-47	-	Automotive Cons. Fink	-	3	

Ref.-No.	Equipment	Type	Serial-No.	Manufacturer	Interval of calibration	Remark	Cal due
480	power meter (Fula)	NRVS	838392/031	Rohde & Schwarz	24 M	-	16.05.2019
482	filter matrix	Filter matrix SAR 1	-	CETECOM (Brl)	-	1d	
487	System CTC NSA-Verification SAR-EMI	System EMI field (SAR) NSA	-	ETS Lindgren / CETECOM	24 M	-	31.03.2019
502	band reject filter	WRCG 1709/1786-1699/1796-	SN 9	Wainwright	pre-m	2	
503	band reject filter	WRCG 824/849-814/859-	SN 5	Wainwright	pre-m	2	
517	relais switch matrix	HF Relais Box Keithley	SE 04	Keithley	pre-m	2	
523	Digital Multimeter	L4411A	MY46000154	Agilent	24 M	-	18.05.2019
529	6 dB Broadband resistive power divider	Model 1515	LH 855	Weinschel	pre-m	2	
530	10 dB Broadband resistive power divider	R 416110000	LOT 9828	-	pre-m	2	
546	Univ. Radio Communication Tester	CMU 200	106436	R&S	12 M	-	30.03.2018
547	Univ. Radio Communication Tester	CMU 200	835390/014	Rohde & Schwarz	12 M	-	05.07.2018
549	Log.Per-Antenna	HL025	1000060	Rohde & Schwarz	36/12 M	-	31.07.2018
550	System CTC S-VSWR Verification SAR-EMI	System EMI Field SAR S-VSWR	-	ETS Lindgren/CETECOM	24 M	-	30.03.2019
558	System CTC FAR S-VSWR	System CTC FAR S-VSWR	-	CTC	24 M	-	08.08.2019
574	Biconilog Hybrid Antenna	BTA-L	980026L	Frankonia	36/12 M	-	31.03.2019
584	Spectrum Analyzer	FSU 8	100248	Rohde & Schwarz	pre-m	-	
594	Wideband Radio Communication Tester	CMW 500	101757	Rohde & Schwarz	12 M	-	30.05.2019
597	Univ. Radio Communication Tester	CMU 200	100347	Rohde & Schwarz	pre-m	-	
600	power meter	NRVD (Reserve)	834501/018	Rohde & Schwarz	24 M	-	17.05.2019
601	medium-sensitivity diode sensor	NRV-Z5 (Reserve)	8435323/003	Rohde & Schwarz	24 M	-	15.05.2019
602	peak power sensor	NRV-Z32 (Reserve)	835080	Rohde & Schwarz	24 M	-	
611	DC power supply	E3632A	KR 75305854	Agilent	pre-m	2	
612	DC power supply	E3632A	MY 40001321	Agilent	pre-m	2	
613	Attenuator	R416120000 20dB 10W	Lot. 9828	Radiall	pre-m	2	
616	Digitalmultimeter	Fluke 177	88900339	Fluke	24 M	-	30.05.2020
617	Power Splitter/Combiner	ZFSC-2-2-S+	S F987001108	Mini Circuits	-	2	
618	Power Splitter/Combiner	50PD-634	600994	JFW Industries USA	-	2	
619	Power Splitter/Combiner	50PD-634	600995	JFW Industries, USA	-	3	
620	EMI Test Receiver	ESU 26	100362	Rohde-Schwarz	12 M	-	30.05.2019
621	Step Attenuator 0-139 dB	RSP	100017	Rohde & Schwarz	pre-m	2	
625	Generic Test Load USB	Generic Test Load USB	-	CETECOM	-	2	
627	data logger	OPUS 1	201.0999.9302.6.4.1.4 3	G. Lufft GmbH	24 M	-	30.03.2019
634	Spectrum Analyzer	FSM (HF-Unit)	826188/010	Rohde & Schwarz	pre-m	2	
637	High Speed HDMI with Ethernet 1m	HDMI cable with Ethernet 1m	-	KogiLink	-	2	
638	HDMI Kabel with Ethernet 1,5 m flach	HDMI cable with Ethernet	-	Reichelt	-	2	
640	HDMI cable 2m rund	HDMI cable 2m rund	-	Reichelt	-	2	
641	HDMI cable with Ethernet	Certified HDMI cable with	-	PureLink	-	2	
642	Wideband Radio Communication Tester	CMW 500	126089	Rohde&Schwarz	24 M	-	24.05.2019
644	Amplifierer	ZX60-2534M+	SN865701299	Mini-Circuits	-	-	
670	Univ. Radio Communication Tester	CMU 200	106833	Rohde & Schwarz	24 M	-	30.05.2020
671	DC-power supply 0-5 A	EA-3013S	-	Elektro Automatik	pre-m	2	
678	Power Meter	NRP	101638	Rohde&Schwarz	pre-m	-	
683	Spectrum Analyzer	FSU 26	200571	Rohde & Schwarz	12 M	-	30.05.2019
686	Field Analyzer	EHP-200A	160WX30702	Narda Safety Test Solutions	24 M	-	29.03.2019
687	Signal Generator	SMF 100A	102073	Rohde&Schwarz	12 M	-	30.05.2019
688	Pre Amp	JS-18004000-40-8P	1750117	Miteq	pre-m	-	
690	Spectrum Analyzer	FSU	100302/026	Rohde&Schwarz	24 M	-	16.05.2019
691	OSP120 Base Unit	OSP120	106833	Rohde & Schwarz	12 M	-	30.05.2019
692	Bluetooth Tester	CBT 32	100236	Rohde & Schwarz	36 M	-	29.05.2020
697	Power Splitter	ZN4PD-642W-S+	165001445	Mini-Circuits	-	2	
703	INNCO Antennen Mast	MA 4010-KT080-XPET-ZSS3	MA4170-KT100-XPET-	INNCO	pre-m	-	
704	INNCON Controller	CO 3000-4port	CO3000/933/3841051 6/L	INNCO Systems GmBh	pre-m	-	
711	Harmonic Mixer 90 GHz - 140GHz	RPG FS-Z140	101004	RPG	24 M	-	22.02.2019
712	Harmonic Mixer 75 GHz - 110GHz	FS-Z110	101468	Rohde & Schwarz	24 M	-	22.02.2019
713	Harmonic Mixer, 50 GHz - 75GHz	FS-Z75	101022	Rohde & Schwarz	24 M	-	22.05.2019
714	Signal Analyzer 67GHz	FSW67	104023	Rohde & Schwarz	24 M	-	28.02.2020
715	Harmonic Mixer, 140 GHz - 220GHz	FS-Z220	101009	RPG Radiometer Physics	24 M	-	03.08.2019
716	Harmonic Mixer 220 GHz to 325 GHZ	FS-Z325	101005	RPG Radiometer Physics	24 M	-	13.02.2019
747	Spectrum Analyzer	FSU 26	200152	Rohde & Schwarz	12 M	-	30.05.2019
748	Pickett-Potter Horn Antenna	FH-PP 4060	010001	Radiometer Physiscs	-	-	
749	Pickett-potter Horn Antenna	FH-PP 60-90	010003	Radiometer Physics	-	-	
750	Pickett-Potter Horn Antenna	FH-PP 140-220	010011	Radiometer Physics	-	-	
751	Digital Optical System	optoCAN-FD Transceiver	17-010416	mk-messtechnik GmbH	-	-	

Ref.-No.	Equipment	Type	Serial-No.	Manufacturer	Interval of calibration	Remark	Cal due
752	Digital Optical System	optoCAN-FD Transceiver	17-010083	mk-messtechnik GmbH	-	-	
753	Digital Optical System	optoCAN-FD Transceiver	17-010084	mk-messtechnik GmbH	-	-	
754	Digital Optical System	optoCAN-FD Transceiver	17-010415	mk-messtechnik GmbH	-	-	
755	Digital Optical System	optoLAN-100-MAX	17-010795	mk-messtechnik GmbH	-	-	
757	WIDEBAND RADIO COMMUNICATION	CMW500	163673	Rohde&Schwarz	12 M	-	20.07.2018
758	Signal Generator	SMU 200A	100754	Rohde & Schwarz	24 M	-	11.10.2019
780	Spectrum Analyzer	FSH3	101726	Rohde & Schwarz	12 M	-	19.07.2018
781	Power Supply	PS 2042-10 B	2815450369	Elektro-Automatik GmbH	-	-	
782	Power Supply	PS 2042-10 B	2815450348	lektro-Automatik GmbH &Co.KG	-	-	
783	Spectrum Analyzer	FSU 26	100414	Rohde & Schwarz	12 M	-	30.05.2019
784	Power Supply	NGSM 32/10	00196	Rohde & Schwarz	12 M	-	
785	RSP	RF Step Attenuator	860712/012	Rohde & Schwarz	12 M	-	
786	SAR Probe	ES3DV3	3340	Speag	36 M	-	14.02.2021
787	OSP	OSP B157WX	101264	Rohde & Schwarz	12 M	-	30.05.2019

8.1.3. Legend

Note / remarks		Calibrated during system calibration:
	1a	System CTC-SAR-EMS (Ref.-No. 442)
	1b	System-CTC-EMS-Conducted (Ref.-No. 335)
	1c	System CTC-FAR-EMI-RSE (Ref.-No . 443)
	1d	System CTC-SAR-EMI (Ref.-No . 441)
	1e	System CTC-OATS (EMI radiated) (Ref.-No. 337)
	1 f	System CTC-CTIA-OTA (Ref.-No . 420)
	1 g	System CTC-FAR-EMS (Ref.-No . 444)
	2	Calibration or equipment check immediately before measurement
	3	Regulatory maintained equipment for functional check or support purpose
	4	Ancillary equipment without calibration e.g. mechanical equipment or monitoring equipment
	5	Test System

Interval of calibration	12 M	12 month
	24 M	24 month
	36 M	36 month
	24/12 M	Calibration every 24 months. between this every 12 months internal validation
	36/12 M	Calibration every 36 months. between this every 12 months internal validation
	Pre-m	Check before starting the measurement
	-	Without calibration

9. Versions of test reports (change history)

Version	Applied changes	Date of release
--	Inital release	2018-08-23
C1	SW status is updated	2018-09-07
C2	HVIN updated,	2018-09-25