BIXOLON®

User's Manual

Label Printer

Rev. 1.00

SLP-DL410B
SLP-DL413B

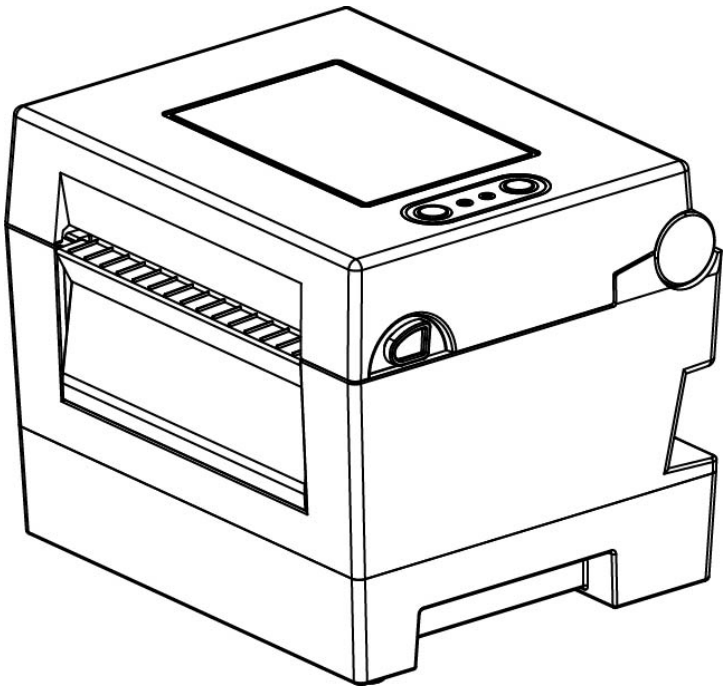

http://www.bixolon.com

■ Table of Contents

※ MANUAL INFORMATION & USAGE PRECAUTIONS 4

1. CONTENT CONFIRMATION 9

2. PRODUCT PART NAMES 10

3. INSTALLATION & USAGE 12

3-1 POWER CONNECTION 12
3-2 INTERFACE CABLE CONNECTION 13
3-3 PAPER INSTALLATION 15
3-4 BUTTON AND LED 16
3-5 TEST PRINTING 18

4. SELF-TEST 19

5. DETAILED FEATURES 20

5-1 PRINTER SETTING USING UTILITY PROGRAM 20
5-2 STAND-ALONE CONFIGURATION MODE 21
5-3 PAUSE / CANCEL 22
5-4 MEDIA CALIBRATION 23
5-5 SMART MEDIA DETECTION 24
5-6 GAP SENSOR AUTO CALIBRATION MODE 24
5-7 BLACK MARK SENSOR AUTO CALIBRATION MODE 25
5-8 MANUAL CALIBRATION MODE 26
5-9 COVER CLOSING MODE 27
5-10 DATA DUMP MODE 27
5-11 FACTORY RESET 28
5-12 THE PEEL-OFF(OPTION) 28
5-13 AUTO CUTTER(OPTION) 30
5-14 REAL-TIME CLOCK(OPTION) 31

6. BLUETOOTH CONNECTION (IOS,ANDROID) 32

6-1 PRECAUTIONS 32
6-2 BLUETOOTH CONNECTION INSTRUCTIONS 32
6-3 SSP MODE SETTING 33
6-4. SSP MODE CHECK 34

7. CLEANING HEAD 35

7-1 CLEANING HEAD 35
7-2 CLEANING SENSORS, ROLLER OR/AND PAPER PATH 36

8. APPENDIX 37

8-1 SPECIFICATIONS 37
8-2 LABEL TYPES 37

■ Manual Information

This user's guide contains basic information for product usage as well as for emergency measures that may be required.

※ The following separate manuals provide more detailed content on various technological issues and areas.

1. Windows Driver Manual

This manual provides information on the installation instructions and main functions of the Windows Driver.

2. Unified Label Printer Utility-II Manual

This manual provides information on the usage of software for function selection of this product, operating condition modification, etc.

3. Programming(SLCS) Manual

This manual provides information on label printer commands.

4. True Font Downloader Manual

This manual provides information on the usage of the font downloader that can download True Fonts and facilitate their usage as Device Fonts.

5. Network User Manual

This manual provides information on the configuration and usage of Ethernet interface.

We at BIXOLON maintain ongoing efforts to enhance and upgrade the functions and quality of all our products. In following, product specifications and/or user's guide content may be changed without prior notice.

■ Safety Precautions

In using the present appliance, please keep the following safety regulations in order to prevent any hazard or material damage.

WARNING

Violating following instructions can cause serious injury or death.

Do not plug several products in one multi-outlet.

- This can provoke over-heating and a fire.
- If the plug is wet or dirty, dry or wipe it before usage.
- If the plug does not fit perfectly with the outlet, do not plug in.
- Be sure to use only standardized multi-outlets.

PROHIBITED

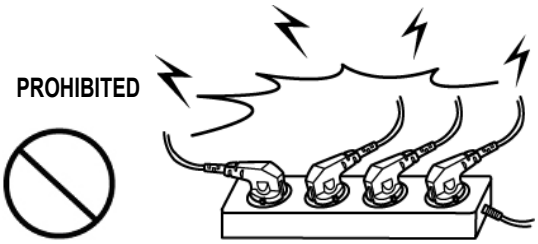

You must use only the supplied adapter.

- It is dangerous to use other adapters.

PROHIBITED

Do not pull the cable to unplug.

- This can damage the cable, which is the origin of a fire or a breakdown of the printer.

PROHIBITED

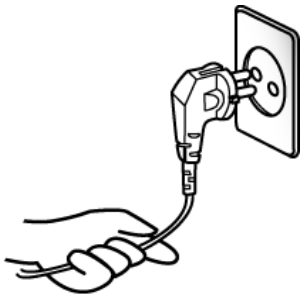

Keep the plastic bag out of children's reach.

- If not, a child may put the bag on his head.

PROHIBITED

Do not plug in or unplug with your hands wet.

- You can be electrocuted.

PROHIBITED

Do not bend the cable by force or leave it under any heavy object.

- A damaged cable can cause a fire.

PROHIBITED

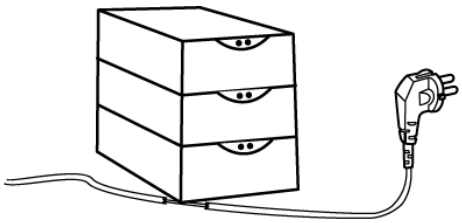

CAUTION

Violating following instructions can cause slight wound or damage the appliance.

If you observe a strange smoke, odor or noise from the printer, unplug it before taking following measures.

- Switch off the printer and unplug the set from the mains.
- After the disappearance of the smoke, call your dealer to repair it.

TO UNPLUG

Keep the desiccant out of children's reach.

- If not, they may eat it.

PROHIBITED

Install the printer on the stable surface.

- If the printer falls down, it can be broken and you can hurt yourself.

PROHIBITED

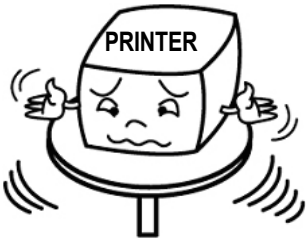

Use only approved accessories and do not try to disassemble, repair or remodel it for yourself.

- Call your dealer when you need these services.
- Do not touch the blade of auto cutter.

DISASSEMBLING PROHIBITED

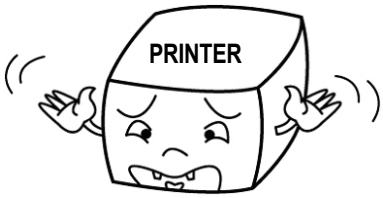

Do not let water or other foreign objects in the printer.

- If this happened, switch off and unplug the printer before calling your dealer.

PROHIBITED

Do not use the printer when it is out of order. This can cause a fire or an electrocution.

- Switch off and unplug the printer before calling your dealer.

TO UNPLUG

■ Other Precautions

The copyright for this user's guide and various other manuals is property of the BIXOLON Corporation. Any copying or conversion into electronic firm and saving of this material without the express written permission of BIXOLON Corporation. is strictly prohibited.

Use of the information contained in this manual is not subject to any patent liability. This manual has been prepared with utmost care and attention to detail but may contain certain errors and/or omissions.

BIXOLON Corporation. is not legally liable for any damages resulting from the use of the information in this manual.

BIXOLON Corporation. and its affiliates are not legally liable(United States excluded) for any damages, loss, costs, and/or expenses that result from the breakdown, malfunction, and/or misuse of the product due to violation or neglect of the operation and maintenance information and instructions provided by the BIXOLON Corporation., as well as from the unauthorized alteration, repair, and/or modification of the product by the user and/or third party.

BIXOLON Corporation. is not legally liable for any damages and/or issues resulting from the use of options and/or parts that are not authentic BIXOLON products or authorized products.

⚠ WARNING

Use of an unprotected interface cable with this printer conflicts with EMC standards.
Users should only use cables approved by BIXOLON.

⚠ WARNING – U.S.A

This equipment has been tested and found to comply with the limits for a Class A digital device pursuant to Part 15 of the FCC Rules. These limits are designed to provide reasonable protection against harmful interference when the equipment is operated in a commercial environment. This equipment generates uses, and can radiate radio frequency energy and, if not installed and used in accordance with the instruction manual, may cause harmful interference to radio communications. Operation of this equipment in a residential area is likely to cause harmful interference in which case the user will be required to correct the interference at his own expense.

⚠ NOTICE – Canada

This Apparatus complies with class “A” limits for radio interference as specified in the Canadian department of communications radio interference regulations. Get appareil est conforme aux normes class “A” d’interference radio tel que specifier par ministre canadien des communications dans les reglements d’interference radio.

⚠ CAUTION

Changes or modifications not expressly approved by the manufacturer responsible for compliance could void the user’s authority to operate the equipment.

■ WEEE(Waste Electrical and Electric Equipment)

This mark shown on the product or its literature indicates that the corresponding item should not be discarded at the end of its working life with other household waste. To prevent possible harm to the environment or human health from uncontrolled waste disposal, please separate marked items from other types of waste and recycle them responsibly to promote the sustained reuse of material resources. Household users should contact either the retailer where they purchased this product, or their local government office for details of where and how they can conduct environmentally safe recycling of such items. Commercial users should contact their suppliers and check the terms and conditions of purchase contracts. This product should not be combined with other commercial waste for disposal.

■ Rating Label Symbol Information

▬

▬ ▬ ▬ DC(Direct current)

1. Content Confirmation

The following items should all be contained in the printer package.
Contact the dealer from which the purchase was made if any item is damaged and/or missing.

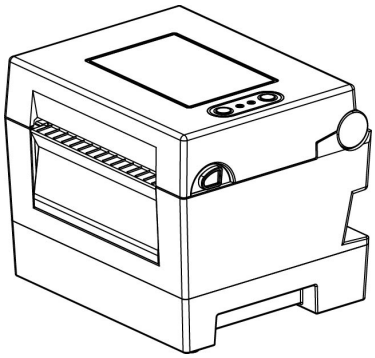

SLP-DL410/DL413

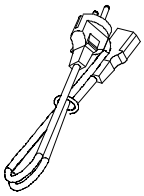

Power Cord

CD

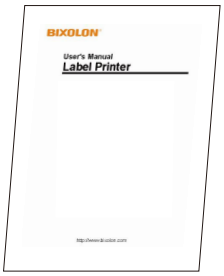

User's Manual

※ Optional items

USB Cable

2. Product Part Names

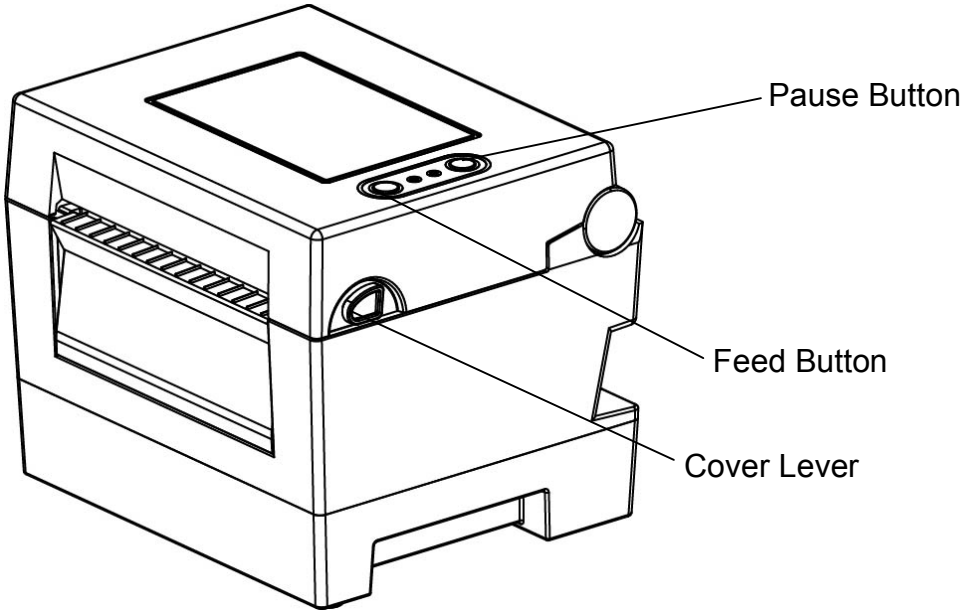

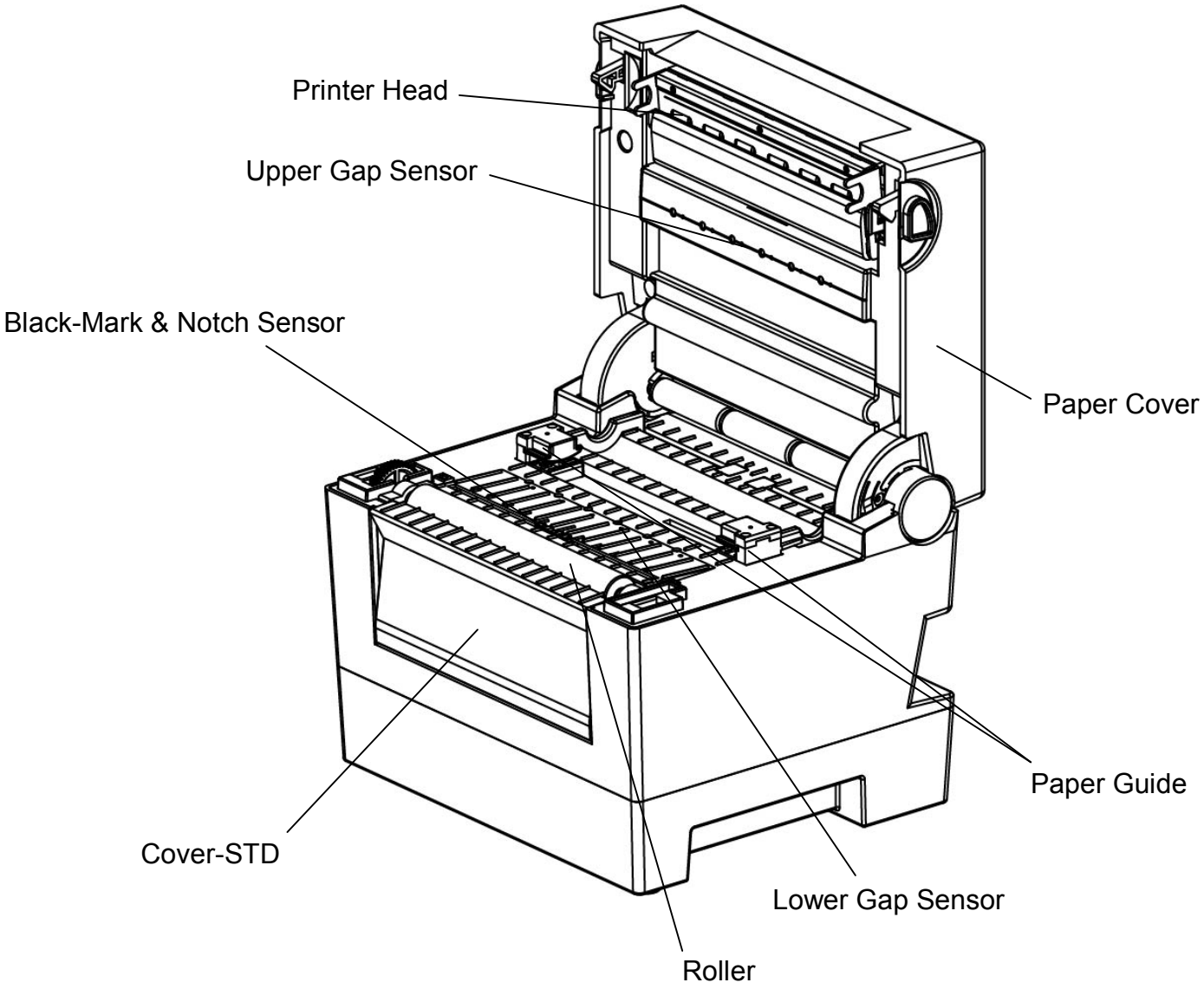

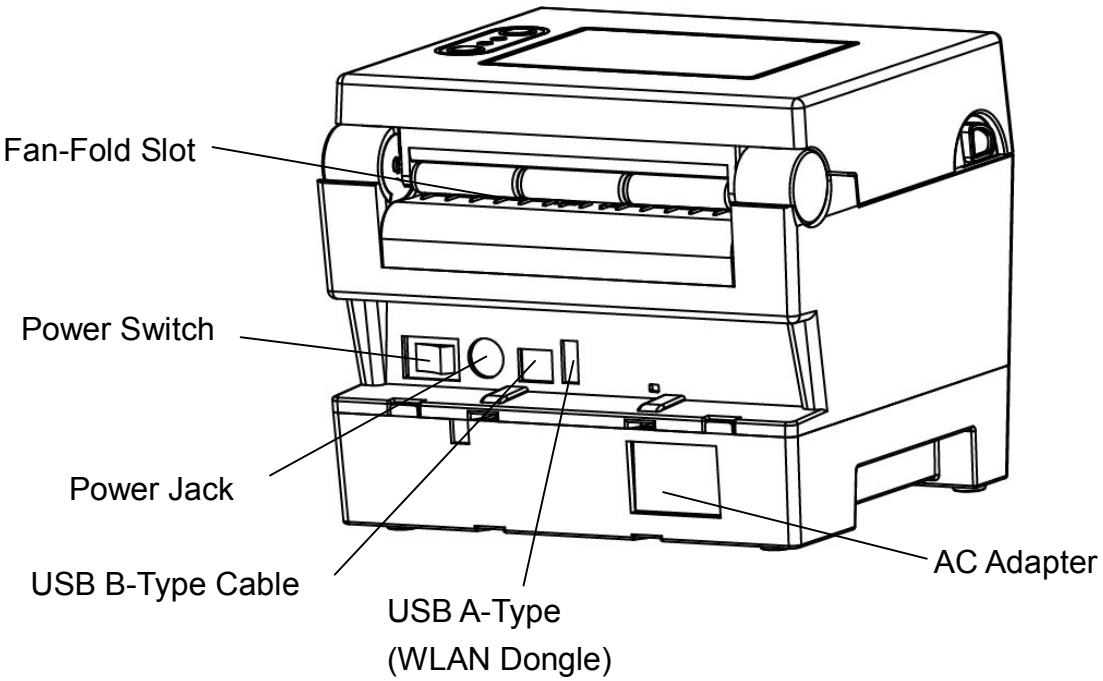
Fan-Fold Slot
Power Switch
Power Jack
USB B-Type Cable
USB A-Type
(WLAN Dongle)
AC Adapter

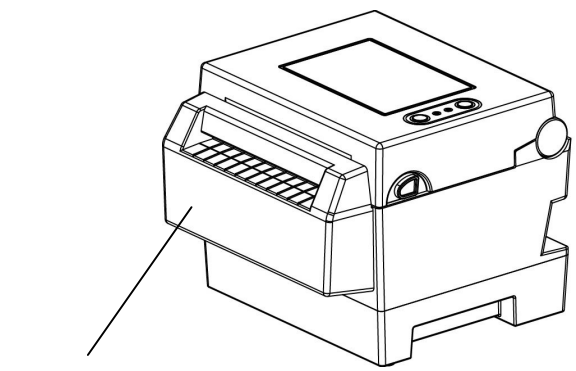
Auto Cutter
(Option)

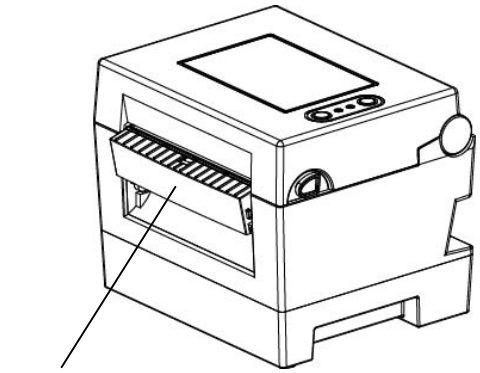
Label Peel-off
(Option)

3. Installation & Usage

3-1 Power Connection

Connect power to the printer as shown below.

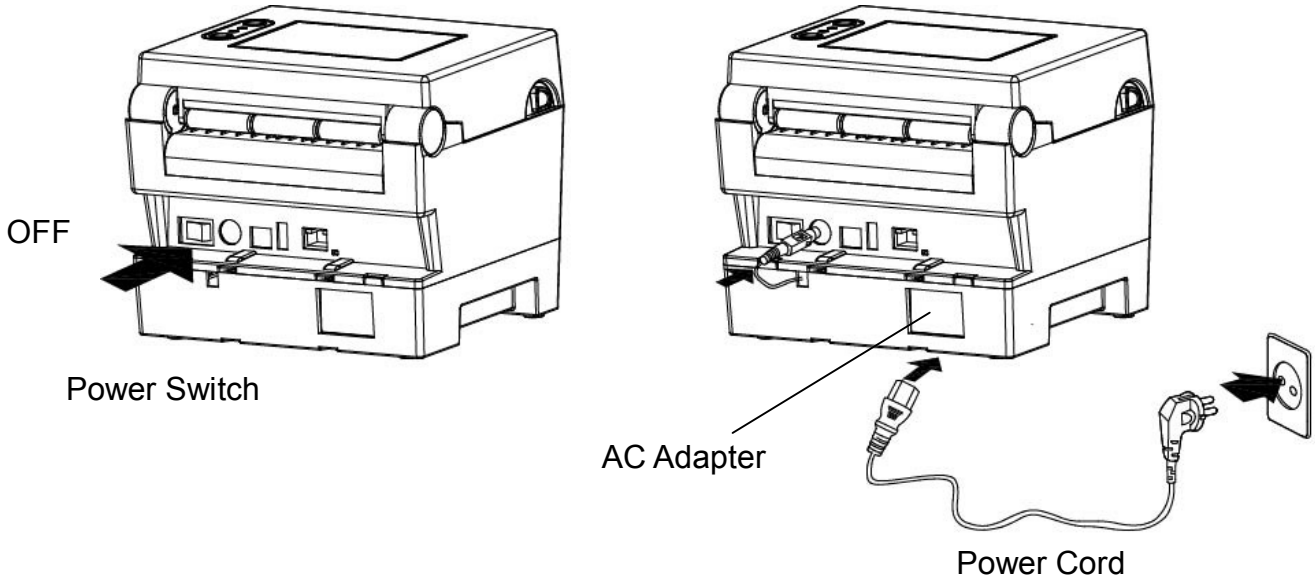

1) Turn off the printer power switch.

2) Check to see that the AC adapter voltage matches that of the power source.

3) Connect the AC adapter jack to the printer power connector.

4) Connect the power cord to the AC adapter.

5) Connect the power cord to a power source/outlet.

3-2 Interface Cable Connection

3-2-1 Standard Model

Connect the interface cable as shown below.

This printer supports the following communications interface standards.

- USB A-Type(WLAN Dongle)
- USB B-Type Cable

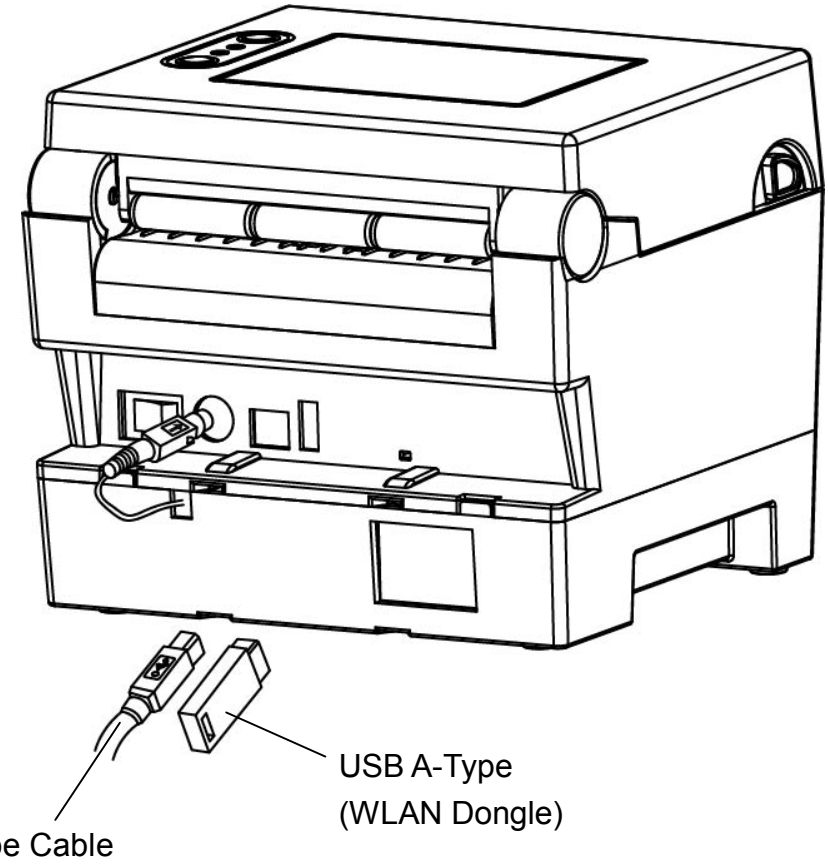

1) Turn off the power switch.

2) Connect the communication cable to the printer communication port to be used.
- Connect USB A-Type(WLAN Dongle) to the HOST port.
- Connect USB B-Type cable to the USB port.
  (This port requires a shielded cable less then 1.8m long.)
- It can connect by internal Bluetooth module.

3-2-2 Ethernet Model

Connect the interface cable as shown below.

This printer supports the following communications interface standards.

- LAN(Ethernet) Cable
- USB A-Type(WLAN Dongle)
- USB B-Type Cable

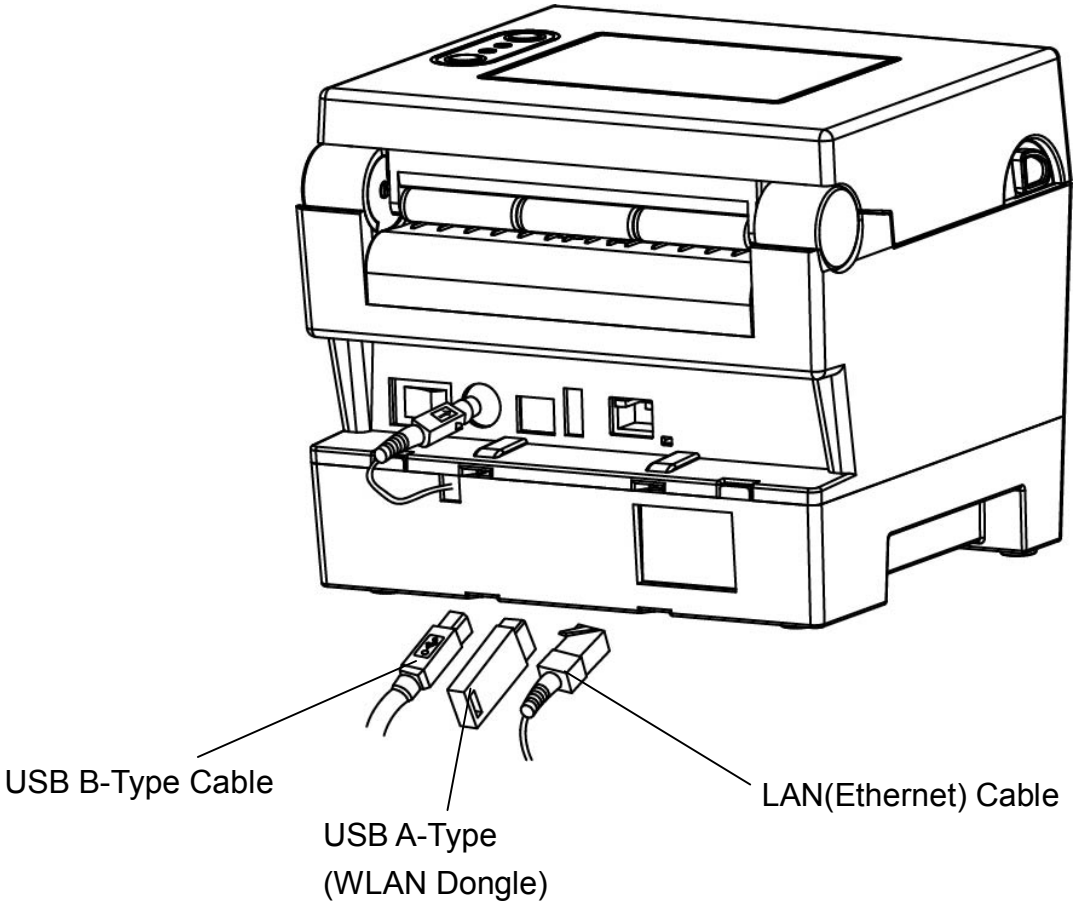

1) Turn off the power switch.

2) Connect the communication cable to the printer communication port to be used.
- Connect the LAN(Ethernet) Cable to the ETHERNET port.
  (This port requires a UTP cable(CAT5 or higher) less then 3.0m long.)
- Connect USB A-Type(WLAN Dongle) to the HOST port.
- Connect USB B-Type Cable to the USB port.
  (This port requires a shielded cable less then 1.8m long.)
- It can connect by internal Bluetooth module.

3-3 Paper Installation

1) Open the Paper Cover.

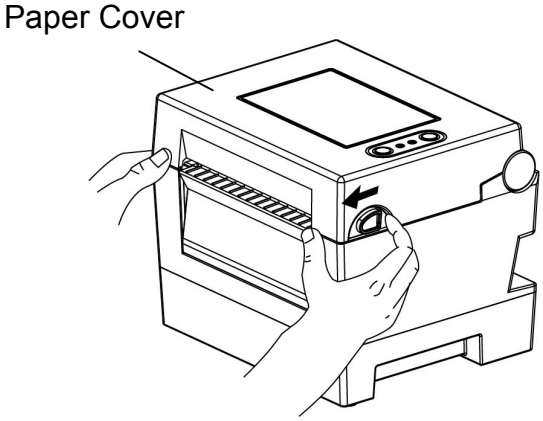

2) Insert Fan-Fold Paper to Fan-Fold Slot.

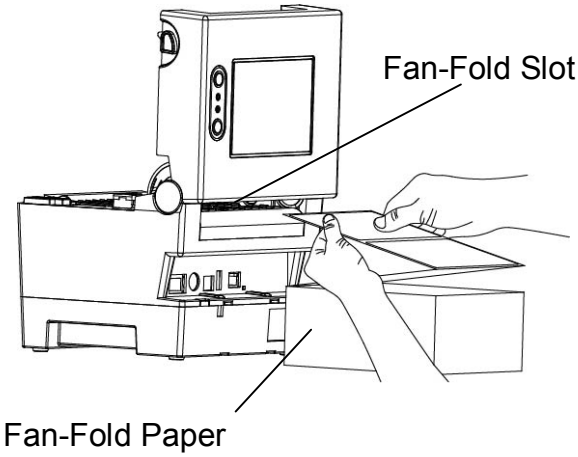

3) Adjust the paper guide to the width of the paper.

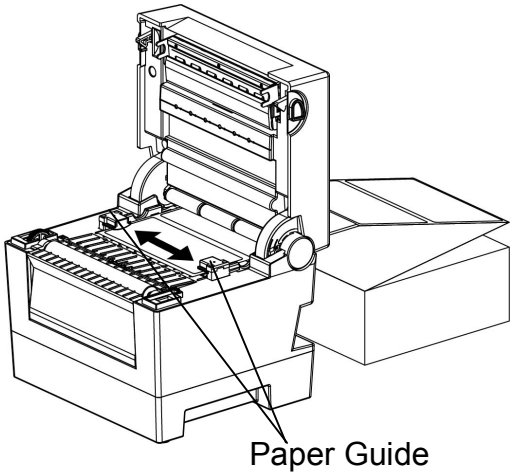

4) If you use Black-Mark or Notch paper roll, please lift up the paper and match the sensor position adjust the black mark or notch hole.

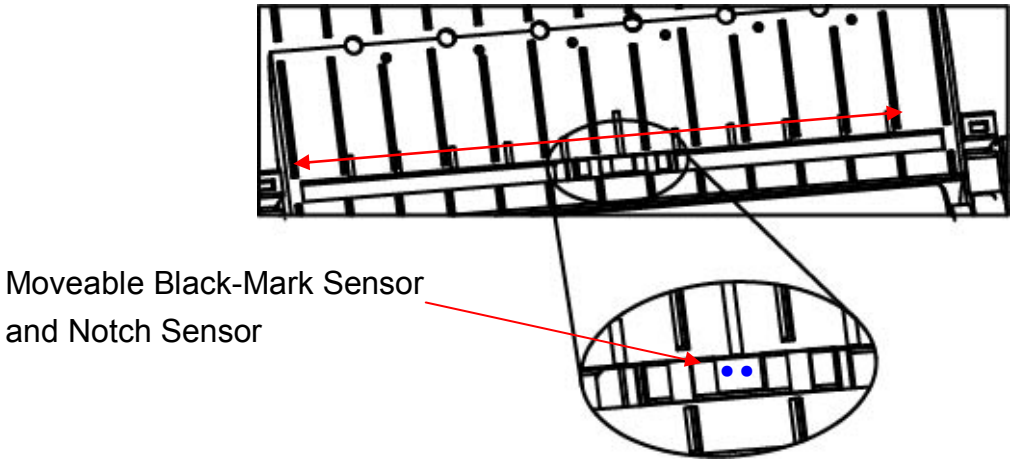

5) Close the Paper Cover until a click sound is heard.

3-4 Button and LED

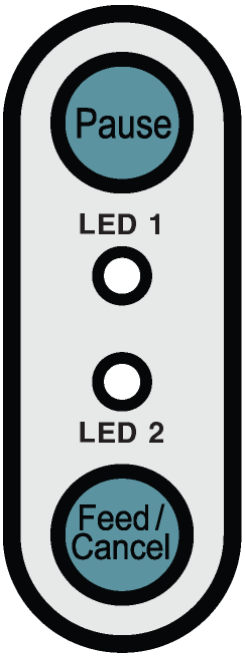

3-4-1 Button Operations

Printer state before operation	Button		Operation procedure	Printer operation mode
	Feed/ Cancel	Pause		
Power OFF	Press	-	• Apply power while pressing the button (Hold the button until the printer starts self-test printing)	Self-test Printing Mode.
Print Standby	Press	-	• Press the button softly and release it	Feed Mode
Print Standby	-	Press	• Press the button for two seconds	Stand-alone configuration Mode
During printing	Press	-	• Press the button for two seconds	Print Cancel Mode
During printing	-	Press	• Press the button softly and release it	Print Pause Mode

3-4-2 LED indicator for various printer statuses

LED 1		LED 2		Printer Status	
Color	Status	Color	Status		
Green	On	Green	On	Print standby mode	Print standby mode
Red	On	Orange	On	Error mode	Paper jam(gap/black mark is not recognized)
Red	On	Green	Blink	Error mode	Printer head overheating
Red	On	Red	Blink	Error mode	Paper Cover open
Red	On	Orange	Blink	Error mode	No paper
Red	On	-	Off	Error mode	Media calibration failure
Red	Blink	Red	Blink	Error mode	Auto-Cutter error
Orange	On	Orange	On	Mode switching notification	Mode switching notification
Green	Blink	Red	On	Wait for input	Print is paused temporarily. Wait for button input
Green	Blink	Green	Blink	Wait for input	Cover Close Mode. Wait for button input
Green	On	Red	Blink	Wait for input	Print Cancel Mode. Wait for button input

3-5 Test printing

3-5-1 Printing using Windows driver

1) Install the Windows driver.
   Refer to the “Windows driver manual” in the CD for the installation procedure.

2) Set the “port” of Windows driver to the appropriate interface to be used. Refer to the “Network user manual” in the CD when using Ethernet interface.

3) Print the test page using the “Print test page” function of Windows driver.

3-5-2 Printing using label design program

- The label design program is included in the CD.

1) Install the label design program.

2) Print the test page after designing a label.

4. Self-Test

The self-test checks whether the printer has any problems.
(Users cannot perform this procedure if using the printer's label peel-off option.)

- Firmware version, printer configuration information, printing quality checking pattern, and peripheral configuration information, etc.

If there is no problem according to self-test result, please check other device(s) or software(s).
This function is operated independently with other device(s) or software(s).

If the printer does not function properly, contact an authorized dealer.

The self-test checks the following;

1) Make sure that the paper roll has been installed properly.

2) Turn on the power while holding down the FEED button. The self-test begins.
(It takes about 5 seconds before starting self-test)

3) The self-test prints the current printer configuration information.

4) After the self-test results are printed out, a printer enters into Print Standby Mode.

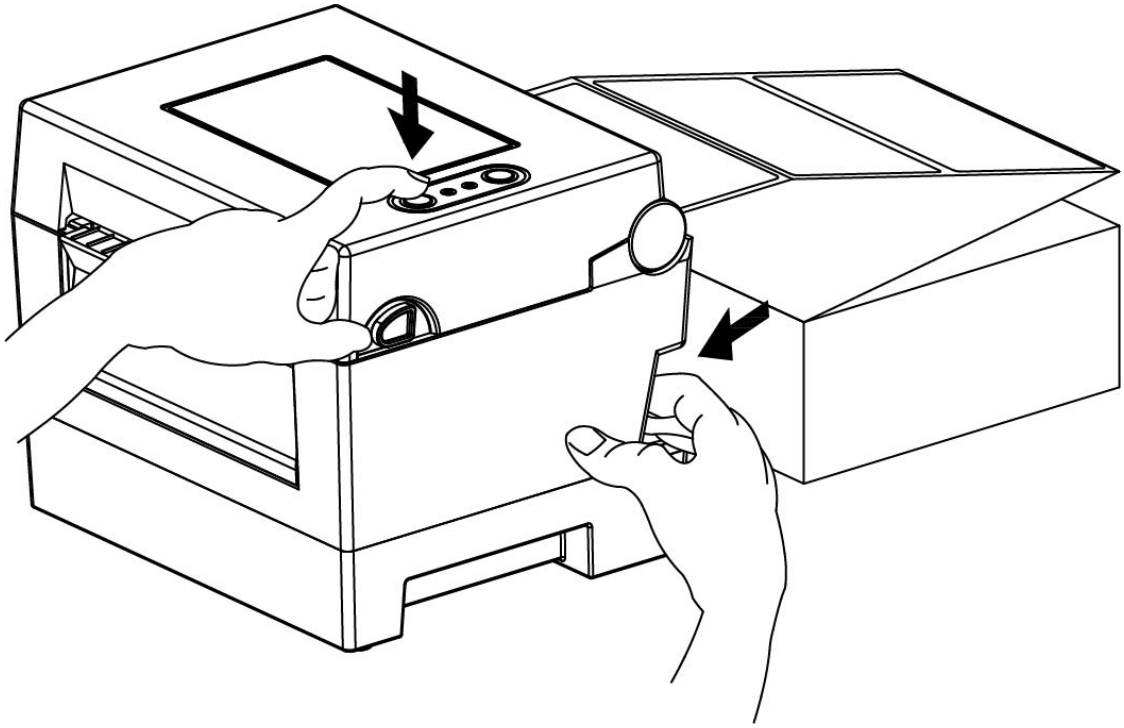

5. Detailed features

5-1 Printer setting using utility program

Various printer settings can be changed using the utility program(Unified Label Utility-II).

Functions that can be used with the utility program are as follows.

1) Basic printer settings
   Paper size, printing speed and density, paper type can be configured.

2) Language setting
   Code page can be configured.

3) Media sensor manual calibration function
   This function can be used to detect special type or special material paper that is not detected through automatic calibration function. Refer to Manual Calibration mode page for more details

4) Other functions for printer test are also provided.

Refer to the Unified Label Utility-II Manual contained in the CD for more detailed information.

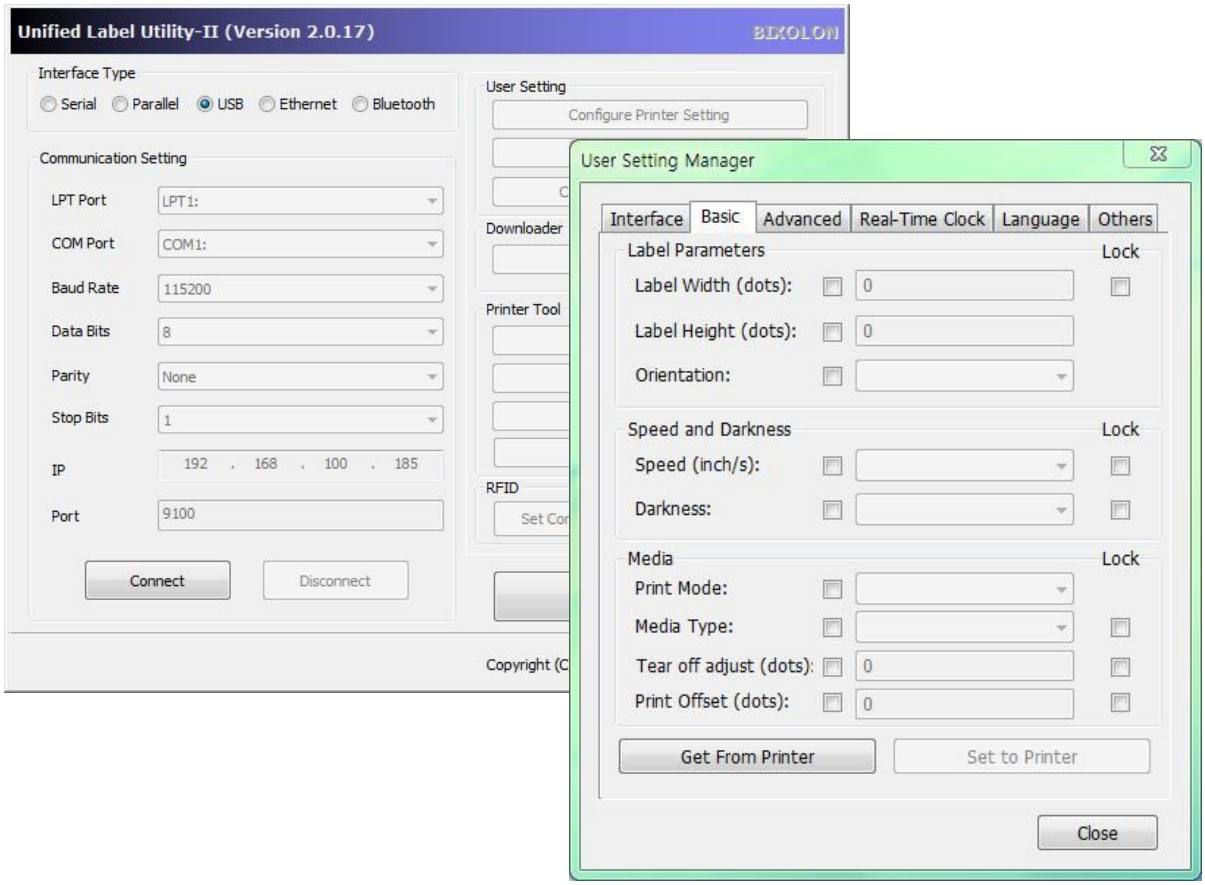

5-2 Stand-alone Configuration Mode

Various modes can be executed using buttons and LED only.

5-2-1 How to start stand-alone configuration mode

- The printer mode is set to Printer Setting Mode when the Pause button is pressed for two seconds while in Print Standby Mode.
- Both LEDs will change to orange color and the printer will be set to Stand-alone Configuration Mode.
- When the printer enters into this mode, the status of LED 1 and LED 2 are changed sequentially.
- When the Feed button is pressed at specific LED color combination, the corresponding printer operation will be selected.

5-2-2 List of supported functions

Sequence number	LED 1		LED 2		Printer operation
	Color	Status	Color	Status	
1	Green	On	Green	Blink four times	Print Configuration Info
2			Orange	Blink four times	Print File List
3			Red	Blink four times	Factory Reset
4	Orange	On	Green	Blink four times	Gap Sensor Auto Calibration
5			Orange	Blink four times	B/M Sensor Auto Calibration
6			Red	Blink four times	Data Dump Mode
7	Red	On	Green	Blink four times	Demo Mode
8			Orange	Blink four times	Line Mode
9			Red	Blink four times	Download Items Delete

5-3 Pause / Cancel

During multiple-page print jobs, the Pause and Cancel button can be used to temporarily cease printing and cancel the print job altogether, respectively.

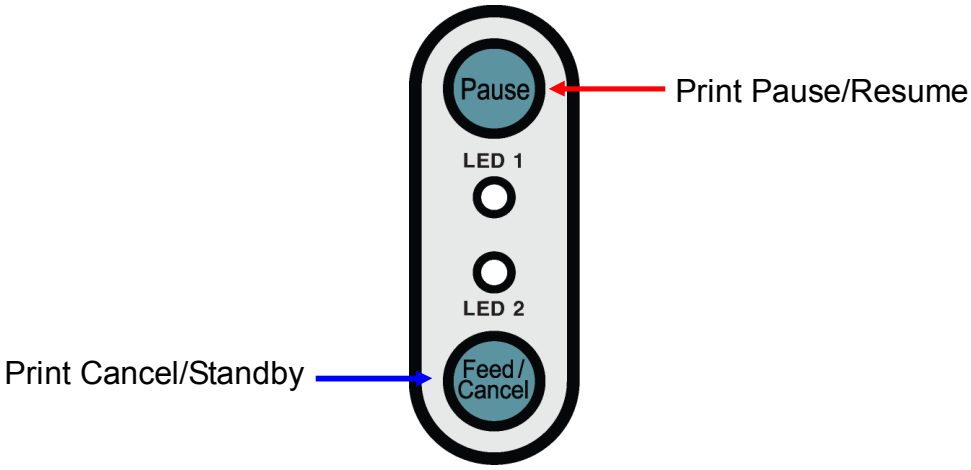

5-3-1 Pause/Resume Function

1) When printing labels, pressing the Pause button

2) The printer will pause after finishing the current label printing and the status of LED will be as follows.
   - LED 1: Green Blink
   - LED 2: Red On

3) While the print job is paused, press the Pause button again to resume printing.

5-3-2 Print Cancellation

1) During label printing and/or pause mode, pressing the Cancel button enters the print cancellation mode.

2) The following processes occur in the print cancellation mode.
   - All label printing cancelled
   - All data received in the printer communications buffer deleted.
   - All received data deleted.

3) The LED Status in the print cancellation mode can be as follows.
   - LED 1: Green On
   - LED 2: Red Blink

4) While in the print cancellation mode, press the Cancel button again to return to print standby mode.

5-4 Media Calibration

This printer has been designed to recognize the gaps with most print papers, but sometimes it may not recognize the gap and keep feeding paper if a special type of paper is used. In this case, run Auto Calibration function so that the printer can recognize the gap. BIXOLON printer provides various media calibration methods in order to accommodate various special paper types.

5-4-1 About media calibration

- This function is for adjusting the sensitivity of the paper detection sensor for accurate printing position control and measuring actual length of paper.
- Sensor sensitivity adjustment
  - The purpose is to detect the identifier(gap/black mark/groove) of installed label
- Paper length measurement
  - Accurate length is required to rotate the printing orientation.
  - The purpose is to detect the change of paper type.

5-4-2 When is media calibration required?

- When the printer is installed first time
- When the newly installed paper is a different paper type
- When printer position is not accurate or printer does not stop in the right position

5-4-3 How to perform media calibration

- The following four methods of media calibration can be used depending on the conditions.
  - Smart Media Detection
  - Gap Sensor Auto Calibration Mode
  - Black Mark Sensor Auto Calibration Mode
  - Manual Calibration Mode
- Why are several calibration methods provided?
  - Multiple labels should be scanned for media calibration and more accurate sensitivity calibration can be performed when more labels are scanned.
  - The number of labels to scan for sensor sensitivity adjustment depends on various conditions such as label paper material, color, surface status, thickness, gap length, pre-printed pattern, etc.
  - Four different media calibration modes are provided for compromise between prevention of excessive use of paper and accuracy of sensor sensitivity adjustment.
  - Smart media detection mode that allows for adjustment of sensitivity with minimum amount of scanning should be good enough for most cases with general labels.
  - Try various methods in order of Smart Media Detection → Gap Sensor Automatic Calibration / Black Mark Sensor Automatic Calibration → Manual Calibration Mode.

5-5 Smart Media Detection

- Printer executes this function when necessary without user input and media configuration can be completed with Smart Media Detection function for most print papers.
- Papers with gap or black mark can be identified without separate settings.
- 3 ~ 5 pages of labels will be used depending on the type of paper.
- Smart Media Detection function is executed in the followings cases
  - When the printer is installed first time, it is executed through Feed button or print command.
  - When paper length change is detected during feeding or printing.
  - When the paper type entered by command is different from the configured paper type.
  - After reset with factory settings
- Smart Media Detection function will be turned off after setting the sensor sensitivity using Automatic Calibration Mode or Manual Media Calibration mode, and it will be enabled again after resetting the printer with factory settings.

5-6 Gap Sensor Auto Calibration Mode

Use this mode when paper is not detected correctly with Smart Media Detection function.

Printer feeds paper and calibrates Gap Sensor automatically.

The printer will enter error mode if paper detection fails after feeding up to 2 meter of paper. Error mode can be released by opening and closing the cover.

Use Manual Calibration Mode if paper detection fails in this mode.

Smart Media Detection will be disabled if paper detection is successful in this mode.

5-6-1 Procedure to run the calibration

- Press the Feed button at 4th LED sequence as shown in section 5-2-2(LED 1 is Orange and LED 2 is blinking Green four times) to start Gap Sensor Automatic Calibration Mode.

5-7 Black Mark Sensor Auto Calibration Mode

Use this mode when paper is not detected correctly with Smart Media Detection function.

Printer feeds paper and calibrates Black Mark Sensor automatically.

The printer will enter error mode if paper detection fails after feeding up to 2 meter of paper. Error mode can be released by opening and closing the cover.

Use Manual Calibration Mode if paper detection fails in this mode.

Smart Media Detection will be disabled if paper detection is successful in this mode.

5-7-1 Procedure to run calibration

- Press the Feed button at 5th LED sequence as shown in section 5-2-2(LED 1 is Orange and LED 2 is blinking Orange four times) to start Black Mark Sensor Automatic Calibration Mode.

5-8 Manual Calibration Mode

Manual-calibration of media detection can be used when the printer cannot detect a media gap(or black mark) even after auto-calibration has been executed.

Users can calibrate sensor parameters in detail by using the utility program provided by the manufacturer. (www.bixolon.com)

The utility can be obtained from the enclosed CD.

Please make sure the printer is connected and execute the utility program.
Click on the “Calibration Setting Manager” Button after setting the interface type.

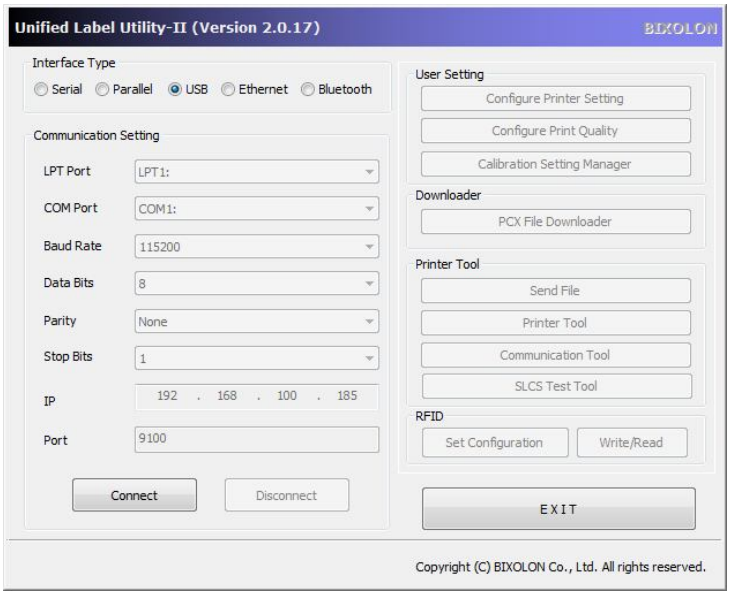

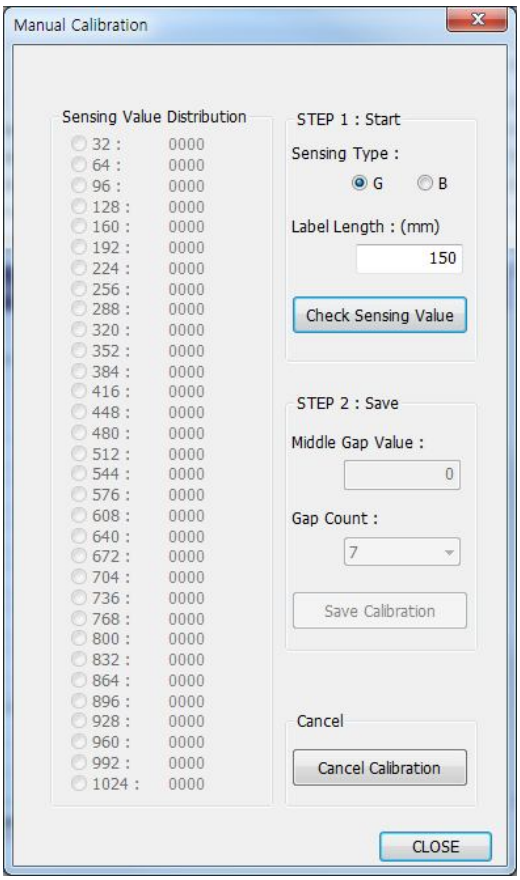

1) Select the sensing type and input the label length by millimeter and click on “Check Sensing Value” button. Then printer starts to calibrate.
2) Printer will print the scanned values after calibration and the values will appear on the Screen.
3) Optimal sensing values will appear in bold letters on the left of the utility screen. Select one of the optimal sensing value by clicking on it's option button and then click on "Save Calibration."
4) If chosen value does not work properly, please try the other values among the bold letters.
5) To go back to the initial value, please click on “Cancel Calibration”

5-9 Cover Closing Mode

5-9-1 About Cover Closing Mode

- The printed area may become out of range of paper if the paper is not in the accurate printing position when the cover is opened and closed.
- The printer is put into Cover Closing Mode instead of Print Standby Mode when the cover is closed in order to prevent this problem, and it waits for user input.
- The status of LEDS are as follows in this mode.
  - LED 1: Green Blink
  - LED 2: Green Blink
- The data received during Cover Close Mode is not printed until the printer recovers to Print Standby Mode.

5-9-2 How to switch the printer from Cover Close Mode to Print Standby Mode

- Press the Pause button to switch to Print Standby Mode without feeding any paper.
- Press the Feed button to feed one page to align the paper position and switch to the Print Standby Mode.

5-10 Data Dump Mode

This function can be used to diagnose the communication issues when the printing does not work correctly.

In this mode, the received data are not analyzed instead they are dumped in hex format without processing.

Turn the printer off and on to recover to the Print Standby Mode.

5-10-1 How to start Data Dump Mode

1) Press the Pause button for two seconds during Print Standby Mode.

2) Both LEDs will change to orange color and the printer will be set to Stand-alone Configuration Mode.

3) Press the Feed button at the sixth LED sequence in 5-2-2(LED 1 Orange / LED 2 Red – Blink four times) to enable Data Dump Mode.

5-11 Factory Reset

This function is used to reset the printer settings to factory default settings.

5-11-1 How to reset the printer

1) Press the Pause button for two seconds during Print Standby Mode.

2) Both LEDs will change to orange color and the printer will be set to Stand-alone Configuration Mode.

3) Press the Feed button at the 3rd LED sequence as shown in section 5-2-2(Status LED is Green and LED 2 is blinking Red four times) to reset the printer to factory settings, and Smart Media Detection function will be executed.

5-12 The Peel-Off(Option)

As a function that is used to peel-off labels, it is used only with label paper.

1) Open the paper cover.

2) Open the label peel-off cover and set the peeler switch to the ON position.
   - Check to see that the LED has turned on.

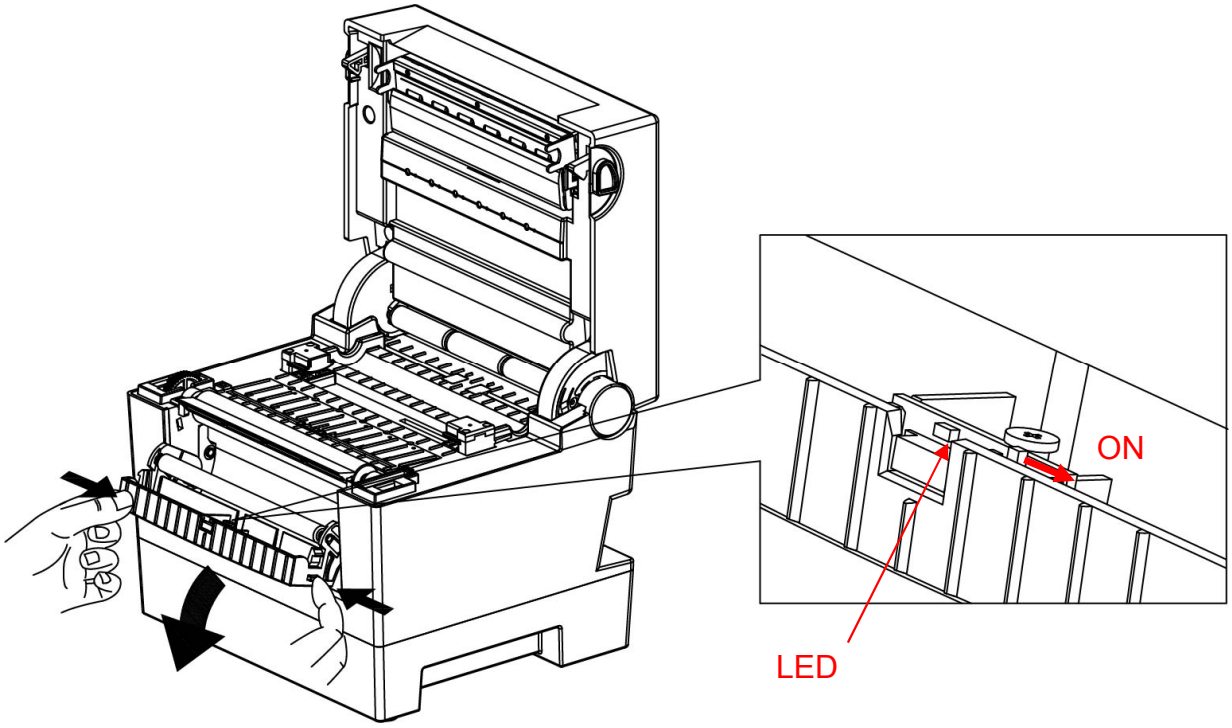

3) Remove one or two sheet of the label paper, and insert the paper as shown in the image below.

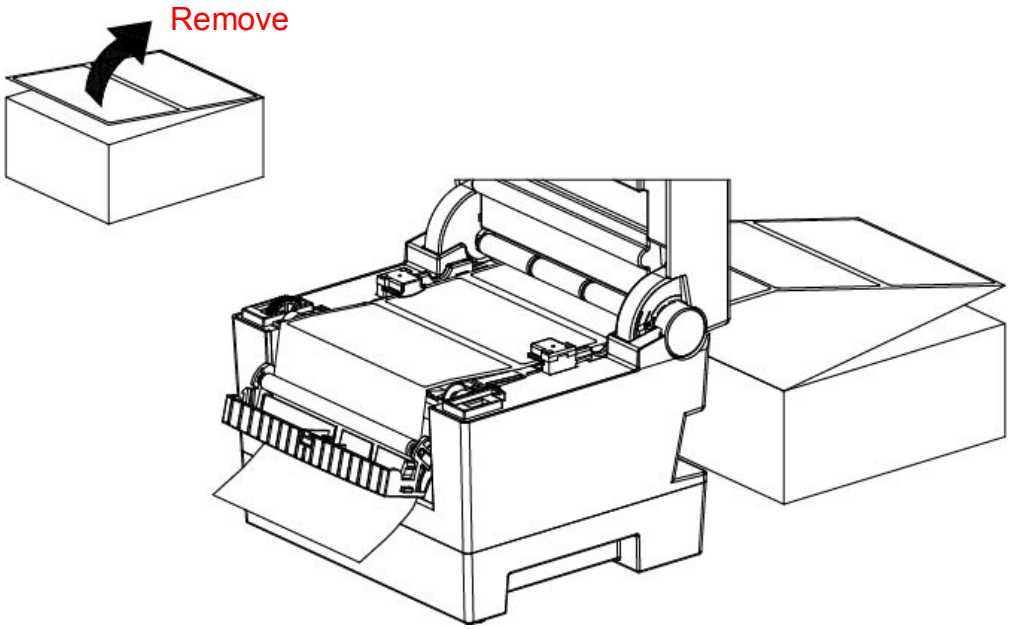

4) Close the label peel-off cover.

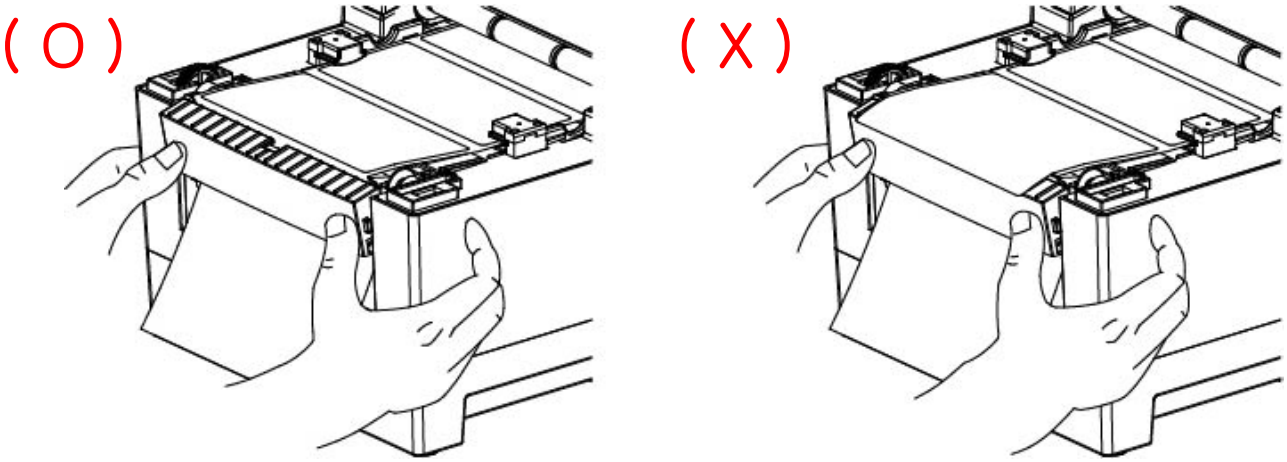

5) Close the Paper Cover until a click sound is heard.

5-13 Auto Cutter(Option)

For auto paper cutting, products equipped with auto cutter are available.

Auto-Cutter can be controlled by command. And default setting can be changed by Unified Label Utility-II.

※ The paper installation method is the same as paper with no auto cutter.

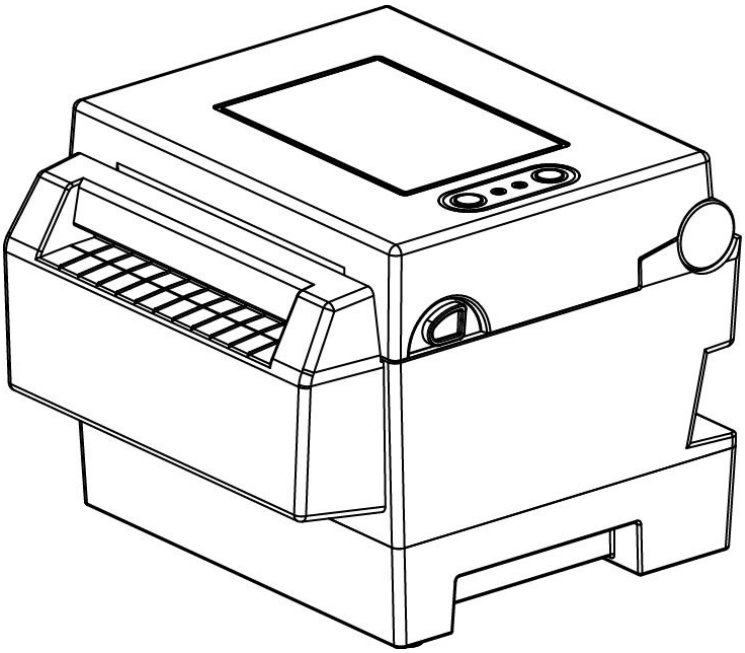

5-14 Real-Time Clock(Option)

The function of the Real-Time Clock option is to print the time and date onto the label. The date and time can be set in the printer by using the Unified Label Utility-II.

You can discern a low or depleted battery if printer provides a consistently incorrect time and date. In this case, you need to replace the battery. When battery is changed, the time and the date will need to be reset.

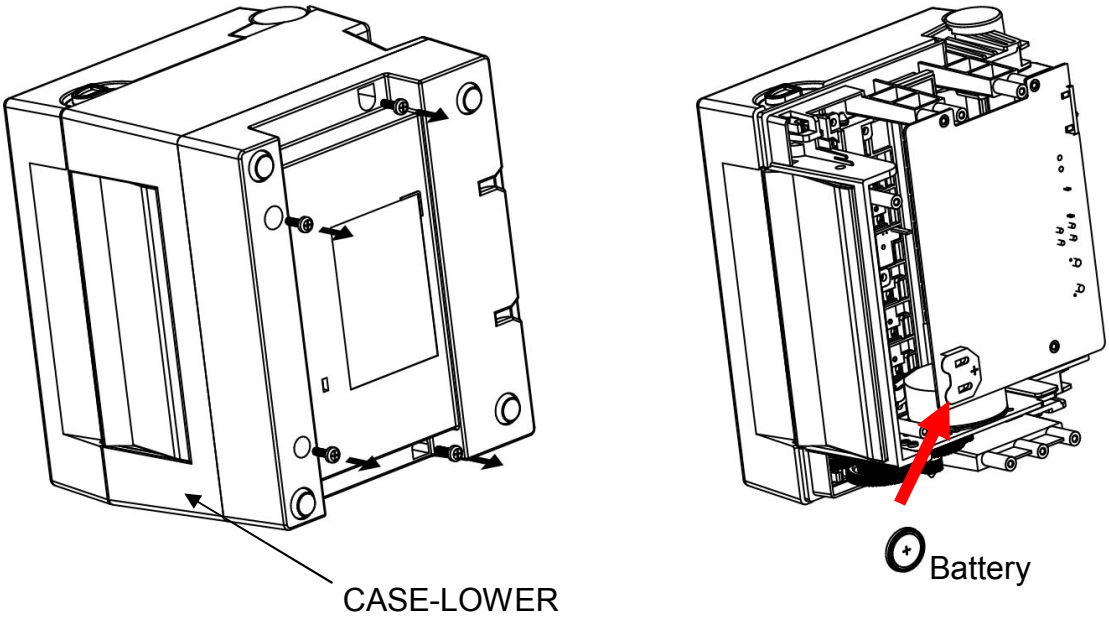

※ **CAUTION**

- For your safety, The CASE-LOWER of the printer should always be closed. When changing the battery, please open the CASE-LOWER after remove the screw using the driver.
- Wrap the battery when recycling or storing to avoid short circuit.
- Do not short circuit the battery. It may result in heat generation or fire.
- Do not disassemble or heat the battery.

6. Bluetooth Connection (iOS,Android)

This Bluetooth connection contents provide information on the connection of Bluetooth-enabled devices with the printer.

6-1 Precautions

- To connect the printer with another device via Bluetooth, the devices must be within 100m of one another. The connection is broken if the distance between devices exceeds 100m.
- The maximum separating distance may be shortened if transmission obstacles, such as cement walls, are present.
- If a device (such as a microwave oven, wireless LAN, etc.) that uses the same frequency is present, transmission may be interrupted. Separate the printer and Bluetooth-enabled device from such interrupting devices by a distance of at least 5m.

6-2 Bluetooth Connection Instructions

This section focuses on the use of the following devices.
Please use this manual as a guide when using devices other than those listed here.

1) Select the icon.

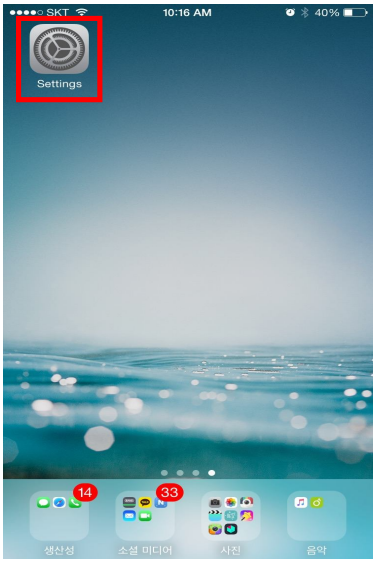

2) Select “Bluetooth”.

3) Select the printer to connect.

4) Enter PIN. (default: 0000).

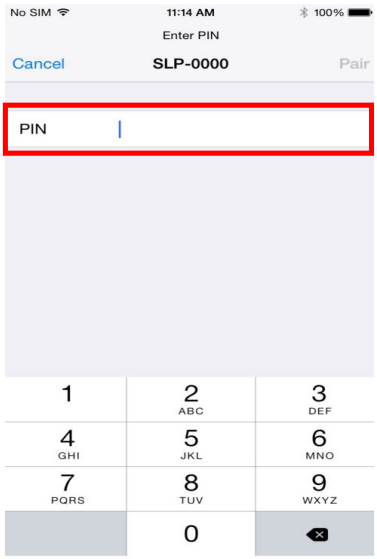

5) Select “Pair” or “OK”.

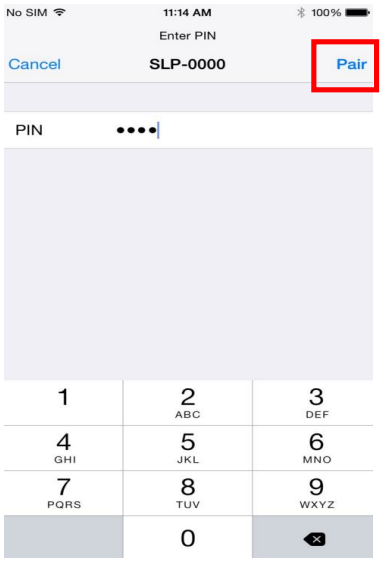

6) Bluetooth communication is available.

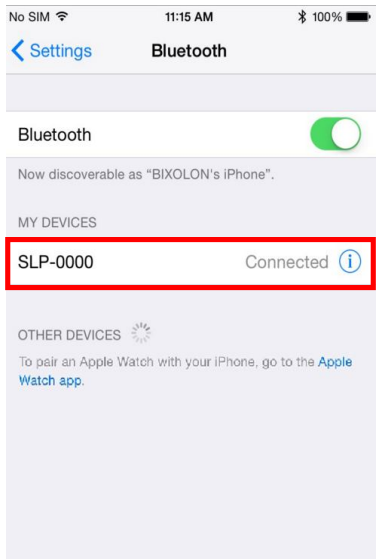

6-3 SSP Mode Setting

Secure Simple Pairing (SSP), a feature of the Bluetooth® Core Version 2.1 specification, was created to address two major concerns among the Bluetooth user community: security and simplicity of the pairing process

SSP(Secure Simple Pairing) Mode can be enabled by Stand-alone Configuration Mode.

1) Turn on the printer power.
2) The printer mode is set to Printer Setting Mode when the Pause button is pressed for two seconds while in Print Standby Mode.
3) Both LEDs will change to orange color and the printer will be set to Stand-alone Configuration Mode.
4) When the printer enters into this mode, the status of LED 1 and LED 2 are changed sequentially.
5) SSP mode setting will be enabled by feed button. Refer to below table.
(LED1 : Red Lit, LED2 : Green blinking, Sequence number 7)

6-3-1 List of supported functions

Sequence number	LED 1		LED 2		Printer operation
	Color	Status	Color	Status	
1	Green	On	Green	Blink four times	Print Configuration Info.
2			Orange	Blink four times	Print File List
3			Red	Blink four times	Factory Reset
4	Orange	On	Green	Blink four times	Gap Sensor Auto Calibration
5			Orange	Blink four times	B/M Sensor Auto Calibration
6			Red	Blink four times	Data Dump Mode
7	Red	On	Green	Blink four times	BT SSP MODE(PinCode/SSP mode)
8			Orange	Blink four times	Line Mode
9			Red	Blink four times	Download Items Delete

6-4. SSP Mode Check

1) Implement the “Print configuration Info.” by Stand-alone Configuration Mode.

2) SSP mode is enabled if “BT SSP Mode” printed “SSP MODE” at the paper.

3) SSP mode is disabled if “BT SSP Mode” printed “PINCODE MODE” at the paper.

7. Cleaning Head

Printing quality might be degraded by dust, foreign substance, adhesive substance, or other pollution materials stuck in the printer head or inside the printer.

When dirty, clean the print head as follows:

※ **CAUTION**
- Make sure to turn the printer power off prior to cleaning.
- As the print head gets very hot during printing, if intending to clean the print head, turn the printer power off and wait approximately 2~3 minute before commencement.
- When cleaning the print head, take care not to touch the heated portion of the print head.
  → Printer Head is susceptible to damage from static electricity, etc.
- Take care not to allow the print head to become scratched and/or damaged in any way.

7-1 Cleaning Head

1) Open the Paper Cover and then use the cleaning pen to clean the head in the direction from the center of the head to the edges.

2) After cleaning the head, do not use the printer until the alcohol used for cleaning evaporates completely(1~2 min) and the printer has completely dried.

※ Perform the cleaning process each time the paper is replaced to prevent print quality deterioration.

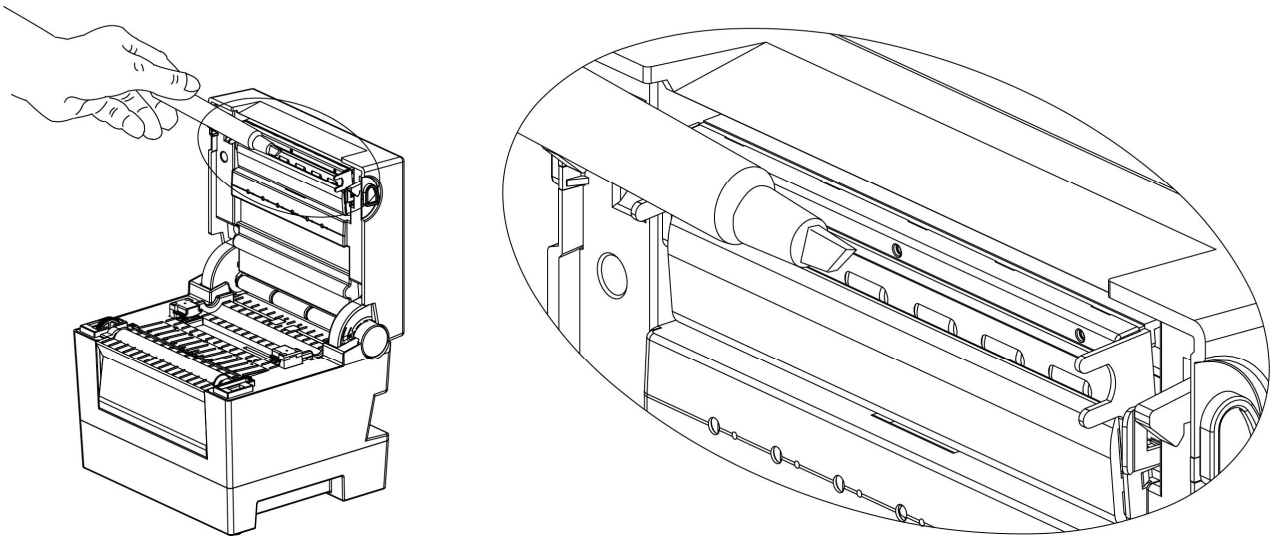

7-2 Cleaning Sensors, Roller or/and Paper Path

1) Open the paper cover and then remove the paper.

2) Remove any dust or foreign substance using dry cloth or cotton swab.

3) Soak the cloth or cotton swab in alcohol for medical use and use it to remove adhesive foreign substances or other pollution materials.

4) After cleaning the parts, do not use the printer until the alcohol evaporates completely (1~2 min) and the printer has completely dried

※ Clean the parts when there is a degradation of performance in printing quality or paper detection.

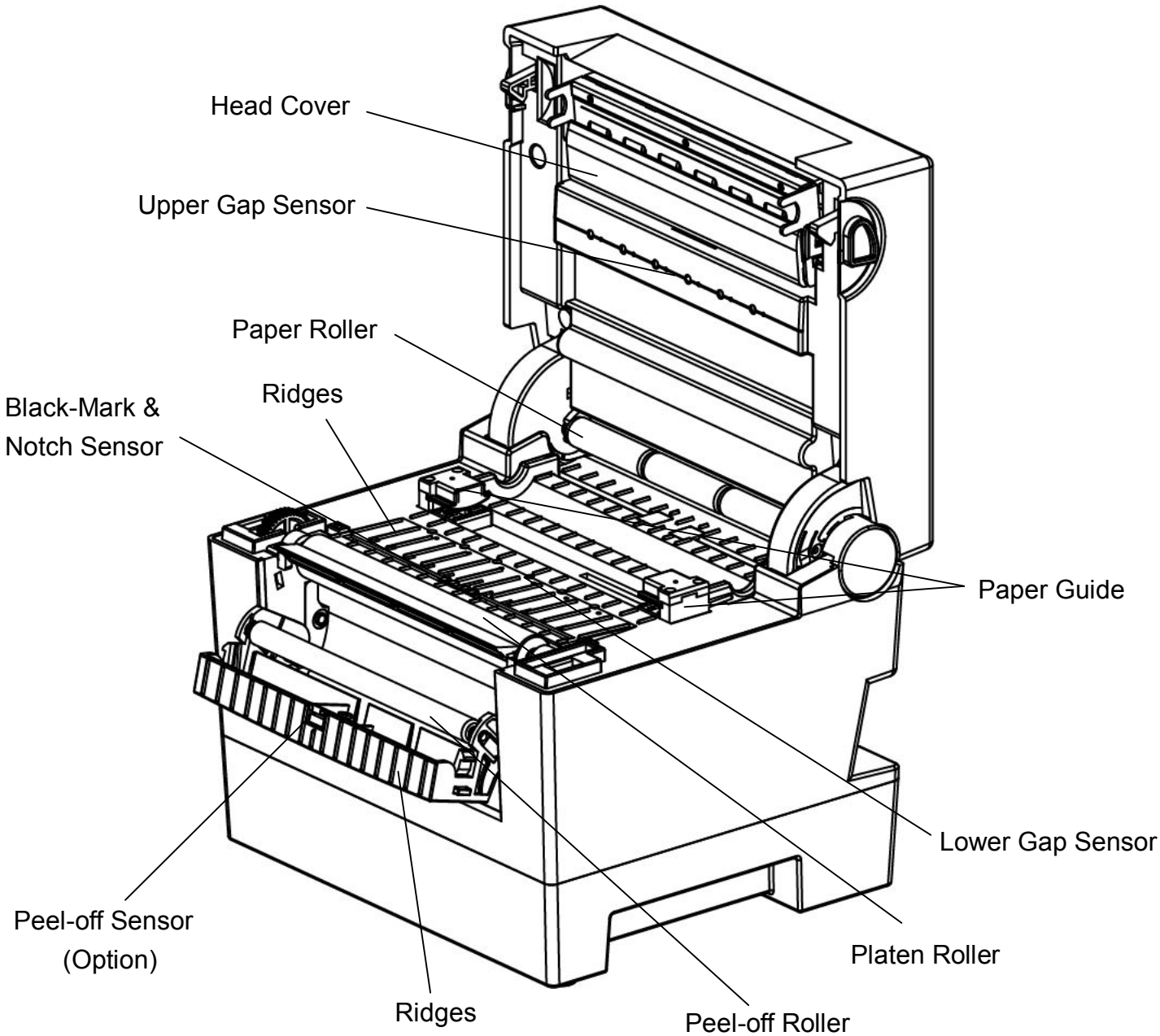

8. Appendix

8-1 Specifications

Item		Description
Printer	Printing Method	Direct Thermal Printing
	Dot Density	SLP-DL410B: 203 dpi(8 dot/mm) SLP-DL413B: 300 dpi(11.8 dot/mm)
	Printing Width	SLP-DL410B: Max 108 mm(Max. 4.25 inch) SLP-DL413B: Max 105.7 mm(Max. 4.16 inch)
	Printing Speed	SLP-DL410B: Max. 127 mm/sec(Max. 5ips) SLP-DL413B: Max. 127 mm/sec(Max. 5ips)
Paper	Width	25 ~ 116 mm(1.04 ~ 4.56 inch)
AC Adapter	Input Voltage	AC 100 ~ 240V
	Frequency	50/60 Hz
	Output Voltage	DC 24V ± 5%
	Output Current	2.5A
Usage Conditions	Temperature	0 ~ 40 ℃(Operating) -20 ~ 60 ℃(Storage)
	Humidity (except for paper)	10 ~ 80 % RH(Operating) 10 ~ 90 % RH(Storage)

※ **Note**

- Printing speed can vary depending on the data transmission speed and combination of control commands.
- This equipment is for indoor use and all the communication wirings are limited to inside of the building.
- The switch is the disconnecting device. Turn off switch from any hazard.

8-2 Label Types

The label types used with this printer are as follows.

- Control Labels: PP
- Other Labels: PET