BIXOLON®

User's Manual

SRP-350IIOBE

Thermal Printer

Rev. 1.00

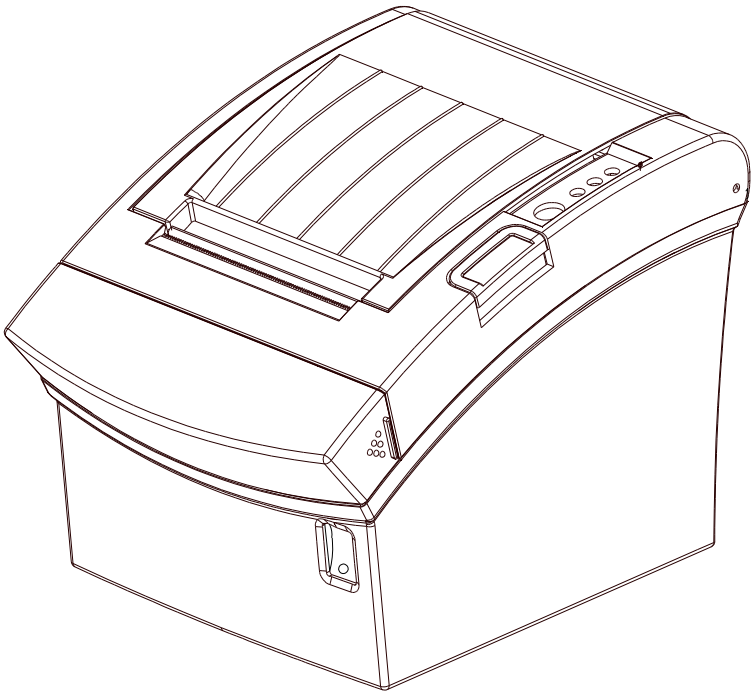

Made for iPod iPhone iPad

http://www.bixolon.com

■ Safety Precautions

In using the present appliance, please keep the following safety regulations in order to prevent any hazard or material damage.

WARNING

Violating following instructions can cause serious injury or death.

Do not plug several products in one multi-outlet.

- This can provoke over-heating and a fire.
- If the plug is wet or dirty, dry or wipe it before usage.
- If the plug does not fit perfectly with the outlet, do not plug in.
- Be sure to use only standardized multi-outlets.

PROHIBITED

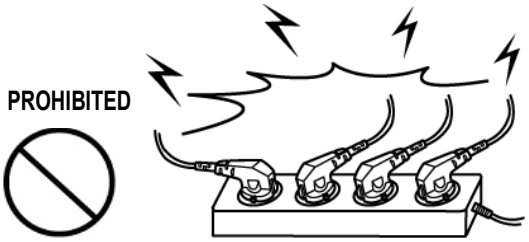

You must use only the supplied adapter.

- It is dangerous to use other adapters.

PROHIBITED

Do not pull the cable to unplug.

- This can damage the cable, which is the origin of a fire or a breakdown of the printer.

PROHIBITED

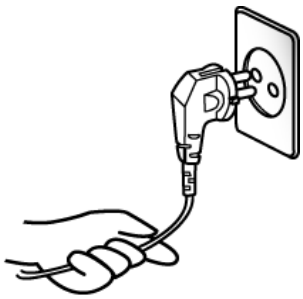

Keep the plastic bag out of children's reach.

- If not, a child may put the bag on his head.

PROHIBITED

Do not plug in or unplug with your hands wet.

- You can be electrocuted.

PROHIBITED

Do not bend the cable by force or leave it under any heavy object.

- A damaged cable can cause a fire.

PROHIBITED

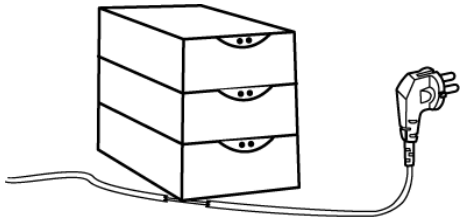

CAUTION

Violating following instructions can cause slight wound or damage the appliance.

If you observe a strange smoke, odor or noise from the printer, unplug it before taking following measures.

- Switch off the printer and unplug the set from the mains.
- After the disappearance of the smoke, call your dealer to repair it.

TO UNPLUG

Keep the desiccant out of children's reach.

- If not, they may eat it.

PROHIBITED

Install the printer on the stable surface.

- If the printer falls down, it can be broken and you can hurt yourself.

PROHIBITED

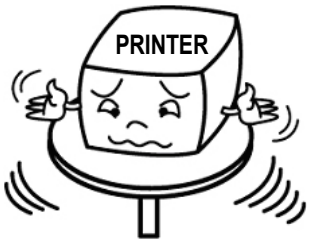

Use only approved accessories and do not try to disassemble, repair or remodel it for yourself.

- Call your dealer when you need these services.
- Do not touch the blade of auto cutter.

DISASSEMBLING PROHIBITED

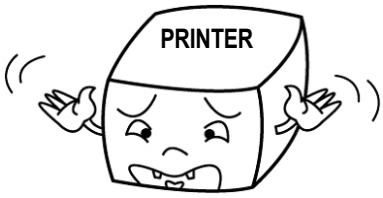

Do not let water or other foreign objects in the printer.

- If this happened, switch off and unplug the printer before calling your dealer.

PROHIBITED

Do not use the printer when it is out of order. This can cause a fire or an electrocution.

- Switch off and unplug the printer before calling your dealer.

TO UNPLUG

■ Warning - U.S.A

1) NOTE: This equipment has been tested and found to comply with the limits for a Class B digital device, pursuant to Part 15 of the FCC Rules. These limits are designed to provide reasonable protection against harmful interference in a residential installation.
This equipment generates, uses and can radiate radio frequency energy and, if not installed and used in accordance with the instructions, may cause harmful interference to radio communications. However, there is no guarantee that interference will not occur in a particular installation. If this equipment does cause harmful interference to radio or television reception, which can be determined by turning the equipment off and on, the user is encouraged to try to correct the interference by one or more of the following measures:
-- Reorient or relocate the receiving antenna.
-- Increase the separation between the equipment and receiver.
-- Connect the equipment into an outlet on a circuit different from that to which the receiver is connected.
-- Consult the dealer or an experienced radio/TV technician for help.

2) Changes or modifications not expressly approved by the manufacturer could void the user's authority to operate the equipment.

This device complies with Part 15 of the FCC Rules. Operation is subject to the following two conditions:
(1) this device may not cause harmful interference, and
(2) this device must accept any interference
received, including interference that may cause undesired operation.

■ Notice - Canada

This Apparatus complies with class “B” limits for radio interference as specified in the Canadian department of communications radio interference regulations.
Get appareil est conforme aux normes class “B” d’interference radio tel que specifier par ministre canadien des communications dans les reglements d’interference radio.

■ Caution

Some semiconductor devices are easily damaged by static electricity. You should turn the printer “OFF”, before you connect or remove the cables on the rear side, in order to guard the printer against the static electricity. If the printer is damaged by the static electricity, you should turn the printer “OFF”.

■ Waste Electrical and Electric Equipment (WEEE)

This marking shown on the product or its literature, indicates that is should not be disposed with other household wastes at the end of its working life, To prevent possible harm to the environment or human health from uncontrolled waste disposal, please separate this from other types of wastes and recycle it responsibly to promote the sustainable reuse of material resources. Household users should contact either the retailer where they purchased this product, or their local government office, for details of where and how they can take this item for environmentally safe recycling. Business users should contact their supplier and check the terms and conditions of the purchase contract. This product should not be mixed with other commercial wastes for disposal.

■ Label Material

* Control Label: PC
* Other Labels: PET

■ Introduction

The SRP-350IIOBE Roll Printer are designed for use with electronic instruments such as system ECR, POS, banking equipment, computer peripheral equipment, etc.
The main features of the printer are as follows:

1. High speed printing : 47.28 (1/6” Feed) lines per second.

2. Low noise thermal printing.

3. USB / Ethernet / Bluetooth On-board Type

4. The data buffer allows the unit to receive print data even during printing.

5. Peripheral units drive circuit enables control of external devices such as cash drawer.

6. Characters can be scaled up to 64 times compared to it’s original size.

7. Bar code printing is possible by using a bar code command.

8. Different print densities can be selected by DIP switches.

Please be sure to read the instruction in this manual carefully before using your new SRP-350IIOBE.

※ NOTE
The socket-outlet shall be near the equipment and it shall be easy accessible.

※ All specifications are subjected to change without notice.

We at BIXOLON maintain ongoing efforts to enhance and upgrade the functions and quality of all our products. In following, product specifications and/or user manual content may be changed without prior notice.

■ Table of Contents

1. Setting Up the Printer 8
1-1 Unpacking 8
1-2 Connecting the Cables 9
1-2-1 Ethernet Interface 9
1-2-2 USB Interface 10
1-2-3 Bluetooth Interface 10
1-3 Connecting the Drawer 11
1-4 Setting the Dip Switches 11
1-5 Installing or Replacing the Paper Roll 12
1-6 Adjustments and Settings 14
1-7 Using the Printer 14
1-8 Connecting the Power Supply 15

2. Self Test 16

3. Hexadecimal Dumping 17

4. Specification 18

5. Appendix 19
5-1 Cleaning Printer 19
5-2 Printing speed 19
5-3 Using Wall Mount 19

1. Setting Up the Printer

1-1 Unpacking

Your printer box should include these items. If any items are damaged or missing, please contact your dealer for assistance.

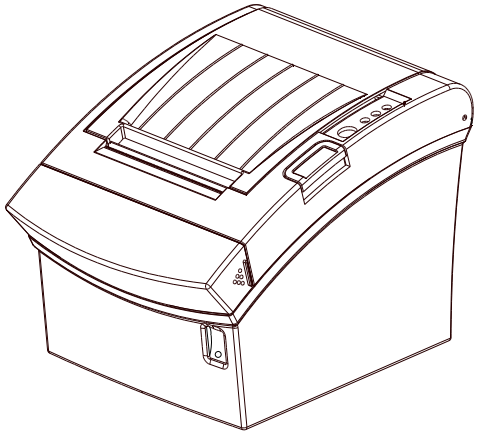

SRP-350IIOBE

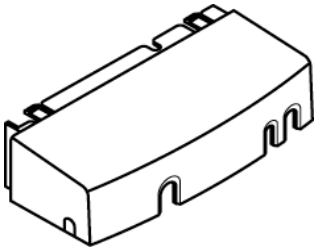

Cover Cable

CD

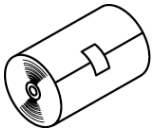

Roll Paper

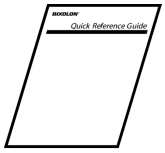

Manual

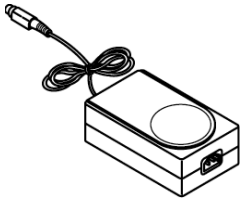

AC Adapter

Power Cord

1-2 Connecting the Cables

You can connect up the three cables to the printer. They all connect to the connector panel on the back of the printer, which is shown below:

※ NOTE

Before connecting any of the cables, make sure that both the printer and the host are turned off.

1-2-1 Ethernet Interface

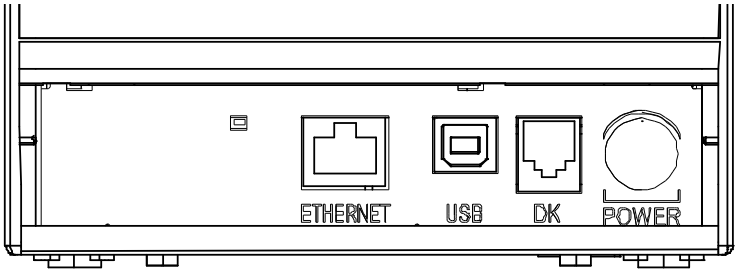

Interface connector (Ethernet) | Drawer kick-out connector | Power supply connector

1) Ethernet Interface specifications

Item	Description	Remark
Network Interface	10/100 Base-T All in one type (Auto detection)	
Protocol	TCP, UDP, IP, ICMP, ARP	
IP mode	Static IP, DHCP(Dynamic Host Configuration Protocol)	
RX buffer	2 KByte	
Flow control	Hardware (RTS/CTS)	

2) Ethernet Interface cable

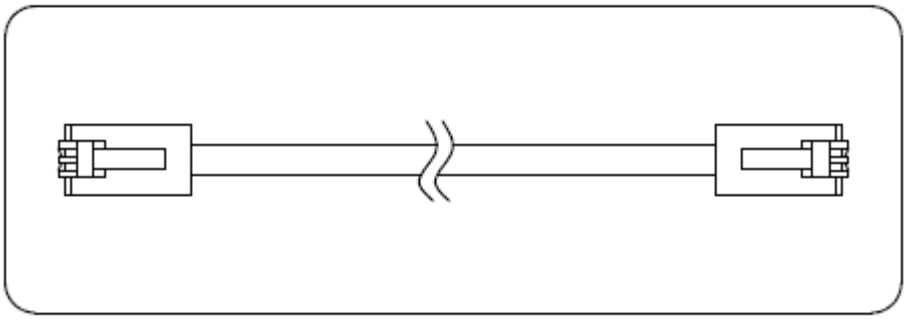

3) Ethernet Interface signal descriptions

Pin No.	Signal name	Assignment(Color)	Function
1	TD+	White Orange	Transmit +
2	TD-	Orange	Transmit -
3	TCT	White Green	Receive +
4	NC	Blue	
5	NC	White Blue	
6	RCT	Green	Receive -
7	RD+	White Brown	
8	RD-	Brown	

* For more information, refer to the Ethernet User Manual in Bixolon Web Site.

1-2-2 USB Interface

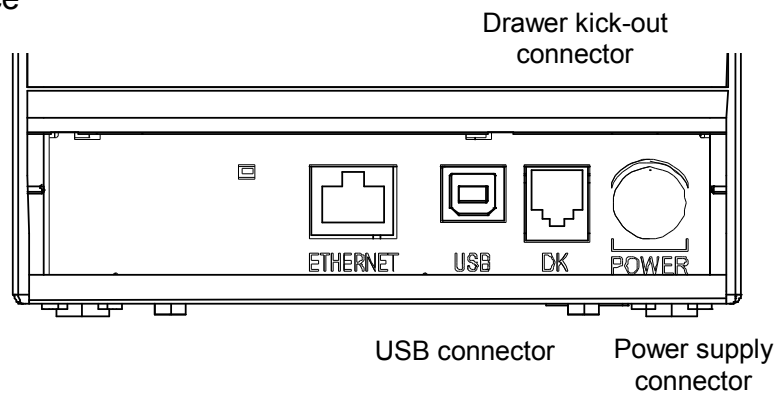

Pin No.	Signal Name	Assignment (Color)	Function
Shell	Shield	Drain Wire	Frame Ground
1	VBUS	Red	Host Power : DC5[V] / 500[mA]
2	D-	White	Differential Data Line
3	D+	Green	Differential Data Line
4	GND	Black	Signal Ground

1-2-3 Bluetooth Interface

1) Bluetooth Interface specifications

Title	Description
Frequency	2.402 ~ 2.480 GHz
Version	2.1 + EDR
Module Type	Class 1

2) Bluetooth Connection

The printer can be connected to devices equipped with Bluetooth communication capacity. (PDAs, PCs, Smart Phone, Tablet PCs, etc.)

* Refer to the Bluetooth Manual for detailed information on its connection.

1-3 Connecting the Drawer

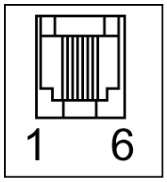

※ WARNING

Use a drawer that matches the printer specification. Using an improper drawer may damage the drawer as well as the printer.

※ CAUTION

Do not connect a telephone line to the drawer kick-out connector; otherwise the printer and the telephone line may be damaged.
Plug the drawer cable into the drawer kick-out connector on the back of the printer next to the power supply connector.

Pin No.	Signal name	Direction
1	Frame GND	-
2	Drawer Kick-Out Driver Signal #1	Output
3	Drawer Open / Close Signal	Input
4	+24V	-
5	Drawer Kick-Out Driver Signal #2	Output
6	Signal GND	-

1-4 Setting the Dip Switches

• DIP Switch 1

SW	Function	ON	OFF	Default
1-1	Reserved	-	-	OFF
1-2	Reserved	-	-	OFF
1-3	Reserved	-	-	OFF
1-4	Reserved	-	-	OFF
1-5	Auto Cutter	Auto cutter disable	Auto cutter enable	OFF
1-6	Reserved	-	-	OFF
1-7	Near-End Sensor Status	Disable	Enable	ON
1-8	Bluetooth mode selection	iOS mode	Normal mode	OFF

※ Auto Cutter Enable / Disable selection

Dip Switch Set 1		
SW 1-5	ON	Auto Cutter Disabled
	OFF	Auto Cutter Enabled
Application	Ignores Auto Cutter error for continuous printing.	

1-5 Installing or Replacing the Paper Roll

※ NOTE
Be sure to use paper rolls that meet the specifications. Do not use paper rolls that have the paper glued to the core because the printer cannot detect the paper end correctly.

1-5-1 Make sure that the printer is not receiving data; otherwise, data may be lost.

1-5-2 Open the paper roll cover by pressing the cover-open button.

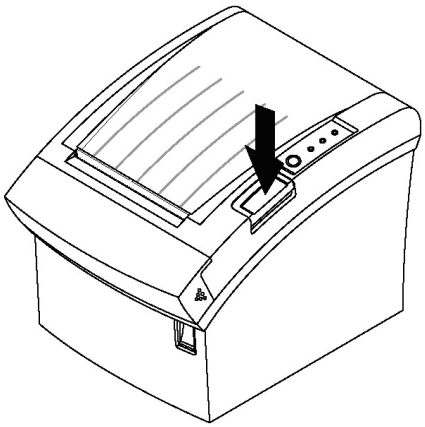

※ NOTE
Do not open the print cover while the printer is operating. This may damage the printer.

1-5-3 Remove the used paper roll core if there is one.

1-5-4 Insert the paper roll as shown.

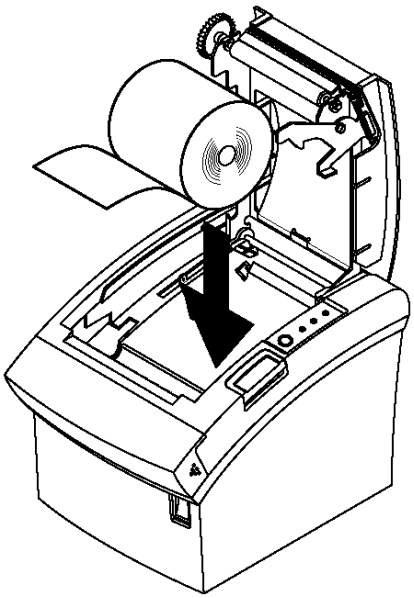

1-5-5 Be sure to note the correct direction that the paper comes off the roll.

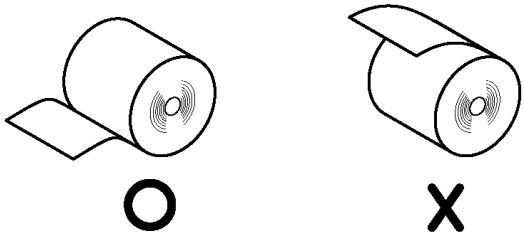

1-5-6 Pull out a small amount of paper, as shown. Then close the cover.

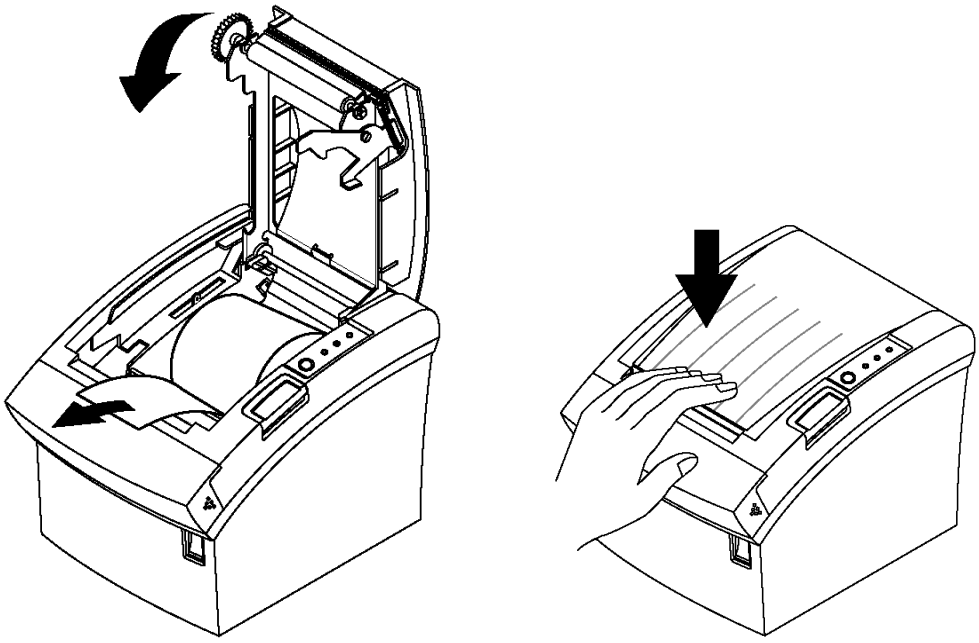

※ **NOTE**
When closing the cover, press the center of printer cover firmly to prevent paper miss-loading.

1-5-7 Tear off the paper as shown.

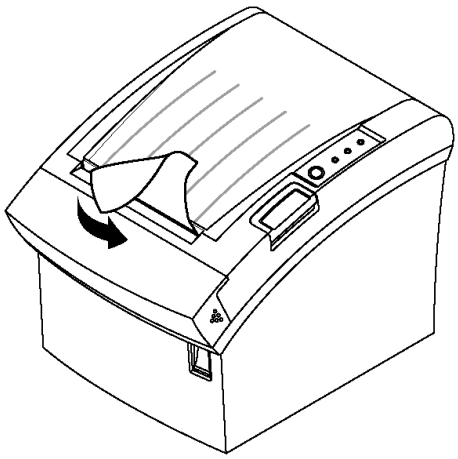

1-6 Adjustments and Settings

The SRP-350IIOBE is set up at the factory to be appropriate for almost all users. It does, however, offer some settings for users with special requirements.

It has DIP switches that allow you to change communication settings, such as handshaking and parity check, as well as print density.

The SRP-350IIOBE also has a near-end sensor for the paper. This can give you a warning when the paper is almost out. If you find that there is not enough paper remaining on the roll when the near-end sensor is triggered, you can change the near-end sensor setting. Rotate the near end sensor tab at front or rear position. (See the below figure)

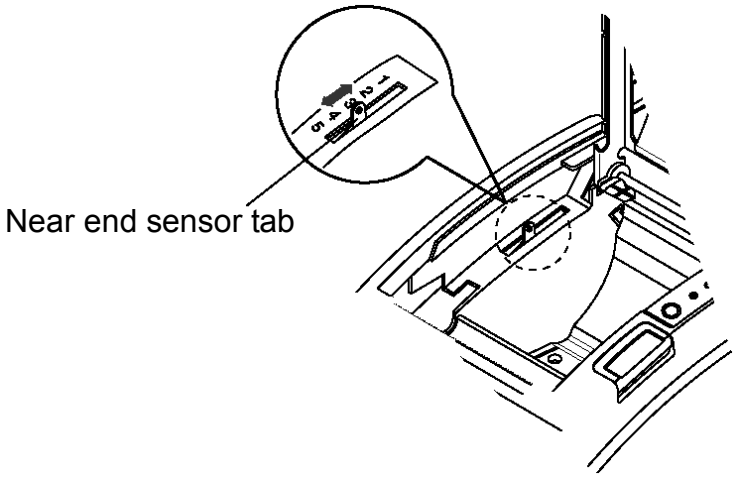

1-7 Using the Printer

Control Panel

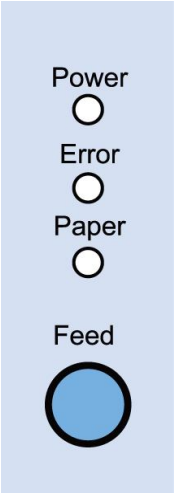

○ POWER
The POWER light is on whenever the printer is on.

○ ERROR
This indicates an error.

○ PAPER
This light indicates the near end of the paper roll. Install a new paper roll and the printer will continue printing. When the light blinks, it indicates the self-test printing standby state or macro execution Standby state when the macro execution command is used.

○ FEED
Press the FEED button once to advance paper one line. You can also hold down the FEED button to feed paper continuously.

1-8 Connecting the Power Supply

※ CAUTIONS

When connecting or disconnecting the power supply from the printer, make sure that the power supply is not plugged into an electrical outlet. Otherwise you may damage the power supply or the printer.

If the power supply's rated voltage and your outlet's voltage do not match, contact your dealer for assistance. Do not plug in the power cord. Otherwise, you may damage the power supply or the printer.

1-8-1 Make sure that the printer's power switch is turned off, and the power supply's power cord is unplugged from the electrical outlet.

1-8-2 Check the label on the power supply to make sure that the voltage required by the power supply matches that of your electrical outlet.

1-8-3 Plug in the power supply's cable as shown below. Notice that the flat side of the plug faces down.

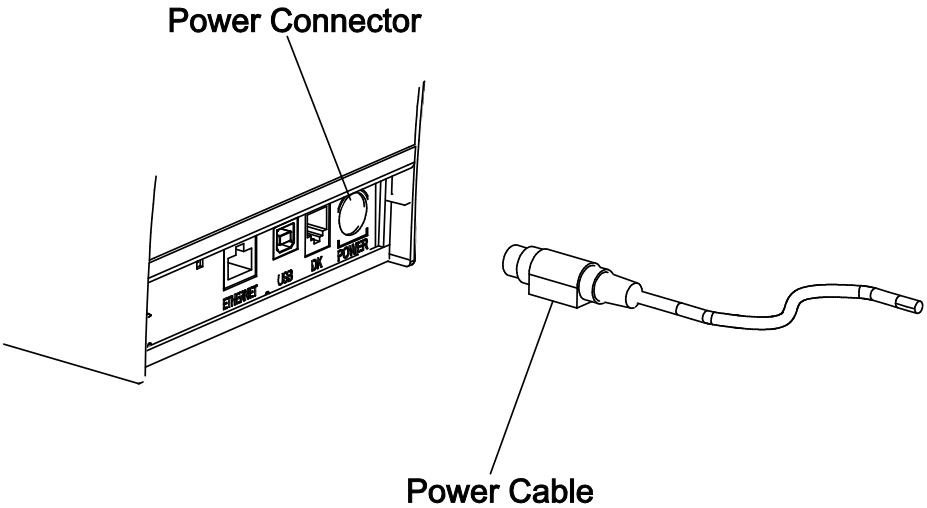

※ NOTE

To remove the DC cable connector, make sure that the power supply's power cord is unplugged; then grasp the connector at the arrow and pull it straight out.

2. Self Test

The self-test checks whether the printer has any problems. If the printer does not function properly, contact your dealer. The self-test checks the following;

2-1 Make sure paper roll has been installed properly.

2-2 Turn on the power while holding down the FEED button until it beep 3times.
The self-test begins.

2-3 The self-test prints the current printer status, which provides the control ROM version and the DIP switch setting.

2-4 After printing the current printer status, self-test printing will print the following, and pause (The PAPER LED light blinks).

SELF-TEST PRINTING.
PLEASE PRESS THE FEED BUTTON.

2-5 Press the FEED button to continue printing.
The printer prints a pattern using the built-in character set.

2-6 The self-test automatically ends and cuts the paper after printing the following.

***** COMPLETED *****

2-7 The printer is ready to receive data as soon as it completes the self-test.

3. Hexadecimal Dumping

This feature allows experienced users to see exactly what data is coming to the printer. This can be useful in finding software problems. When you turn on the hexadecimal dump function, the printer prints all commands and data in hexadecimal format along with a guide section to help you find specific commands.

To use the hexadecimal dump function, follow these steps.

3-1 After you make sure that the printer is off, open the cover.

3-2 Turn on the printer, while holding down the FEED button.

3-3 Close the cover, then the printer enters the hexadecimal dump mode.

3-4 Run any software program that sends data to the printer. The printer will print all the codes it receives in a two-column format. The first column contains the hexadecimal codes and the second column gives the ASCII characters that corresponds to the codes.

```
1B 21 00 1B 26 02 40 40 40 40    . ! . . & . @ @ @ @
02 0D 1B 44 0A 14 1E 28 28 28    . . . D . . . . ( ( (
00 01 0A 41 0D 42 0A 43 43 43    . . . A . B . C C C
```

A period (.) is printed for each code that has no ASCII equivalent.
During the hex dump, all commands except DLE EOT and DLE ENQ are disabled.

3-5 When the printing finishes, turn off the printer.

3-6 Turn on the printer and then the hexadecimal mode is off.

4. Specification

Printing method		Thermal line printing
Dot density		180 dpi (7dots/mm)
Printing width		72 mm
Paper width		80 mm
Characters per line (default)		42 (Font A) 56 (Font B) 56 (Font C)
Printing speed		47.28lines/sec , 200 mm/sec
Receive Buffer Size		4K Bytes
※ **NOTE** : Printing speed may be slower, depending on the data transmission speed and the combination of control commands.		
Supply voltage	SMPS Input voltage	100~240 VAC
	Frequency	50/60 Hz
	SMPS Output voltage	24 VDC
Environmental Conditions	Temperature	0 ~ 45 ℃ (Operating) -20 ~ 60 ℃ (Storage)
	Humidity	10 ~ 80 % RH (Operating) 10 ~ 90 % RH (Storage) ; Except for paper
LIFE *	Mechanism Head	150 Km
	Auto Cutter	1,800,000 Cut
MCBF *	Mechanism	70,000,000 lines

* These values are calculated under printing level 2 with recommended paper at normal temperature.

* These values may vary with environment temperature, printing level, etc.

* The switch is the disconnecting device. Turn off switch from any hazard.

5. Appendix

5-1 Cleaning Printer

Paper dust inside the printer may lower the print quality. In this case clean the printer as follows.

5-1-1 Open the printer cover and remove the paper if exists.

5-1-2 Clean the print head with a cotton swab moistened with alcohol solvent.

5-1-3 Clean the platen roller and paper end sensor with cotton swab moistened with water.

5-1-4 Insert a paper roll and close the printer cover.

The remained amount of paper detected by paper near end sensor varies with the diameter of the paper core.

To adjust the remained amount, contact your dealer.

5-2 Printing speed

When the paper is about to run out, the printing speed may become slower while printing. Press the Push button, open and then close the cover to print at the normal speed until all the paper is used.

5-3 Using Wall Mount

Please disable the near end paper function by making dip switch 1-7 on when you use the printer in wall mount position where the near end paper function will not work well.