Carestream

# User Guide for the CARESTREAM DRX Plus and DRX Core/TRIMAX Detectors

Publication No. AD7006
2021-06-10

Supersedes:
2021-03-10

All rights reserved. No part of this manual may be reproduced or copied in any form by any means—graphic, electronic, or mechanical, including photocopying, typing, or information retrieval systems—without written permission.

# Notices and Conventions

The information herein is based on the experience and knowledge relating to the subject matter gained by Carestream Health, Inc. prior to publication. No patent license is granted by this information. Carestream Health reserves the right to change this information without notice, and makes no warranty, express or implied, with respect to this information. Carestream Health shall not be liable for any loss or damage, including consequential or special damages, even if loss or damage is caused by Carestream Health's negligence or fault.

**Note:**
Notes provide additional information, such as expanded explanations, hints, or reminders.

**Important:**
Important highlights critical policy information that affects how you use this manual and this product.

**CAUTION:**
Caution points out a potentially hazardous situation which, if not avoided, might cause minor or moderate injury.

### Authorized European Representative

EC REP

Carestream Health France SAS

207, Rue de Bercy

75012 Paris

France

**CAUTION:**
Federal law restricts this device to sale by or on the order of a physician.

**CAUTION:**
If you witness or become aware of a potential safety issue with this equipment, take the appropriate safety measures and report this to your Carestream Service representative immediately.

# Contents

**Notices and Conventions**

**1 Safety and Regulatory Information**
Medical Equipment Classification....1-1
Product Safety Standards....1-3
EMC Standards....1-3
Precautions....1-4
FCC Notice (United States)....1-6
ISED Notice (Canada)....1-6
Guidance and Manufacturer's Declaration for Electromagnetic Emissions....1-7
Electromagnetic Immunity....1-8
Guidance and Manufacturer's Declaration for Radio Frequency Immunity....1-10
Wireless Declaration....1-11

**2 Detector Operation**
Cautions....2-2
Pediatric Considerations....2-3
Change Battery....2-4
Insert the Battery Into the Detector....2-4
Battery Unlatch Procedure....2-5
Position the Detector in a Bucky....2-6
Using Detectors....2-8
Connect a Tether to the Detector....2-9
LED Display Matrix....2-10
Reset Button....2-13

**3 Detector Overview**
Transport and Storage Environment....3-1
Operating Environment....3-1
Equipment Maintenance....3-2
Procedure to Clean the Detector....3-3
Procedure to Clean the Battery Well....3-3
Patient Contact....3-4
Weight Label....3-5
Back-up Battery Information....3-6
Disposal....3-6
Power Failures....3-7

**Publication History**

# 1 Safety and Regulatory Information

**CAUTION:**

- For continued safe use of this equipment, follow the instructions contained in this operating manual.
- Study this manual carefully before using the equipment and keep it at hand for quick reference.
- The manufacturer assumes no liability from problems that occur when you do not follow the cautions in this manual.

**Note:**
For technical information on the safety, regulatory, hardware, and operation on related products and systems, see the following publications:

- *CARESTREAM DRX-1 System Battery and DRX Detector Battery User Guide*
- *CARESTREAM DRX-1 System Battery Charger User Guide*
- *User Guide for CARESTREAM DRX-1 System Tether Interface and Model DRX-TPC1*
- *CARESTREAM System Software Online Help*
- User Guide for the CARESTREAM DRX-1 System

## Medical Equipment Classification

**CARESTREAM DRX Plus 3543 Detector, DRX Plus 4343 Detector, DRX PLUS 3543C Detector, DRX Plus 4343C Detector, CARESTREAM DRX Core/TRIMAX 3543 Detector, DRX Core/TRIMAX 4343 Detector, DRX Core/TRIMAX 3543C Detector, DRX Core/TRIMAX 4343C Detector**
**Medical Electrical Equipment Classification**

| Specification | Description |
|---|---|
| Type of protection against electrical shock: | Internally Powered |
| Degree of protection against electrical shock: | Type B Applied Part |
| Degree of protection against ingress of foreign material: | IP57 (DRX Plus detector) break="line"?>IP44 (DRX Core/TRIMAX detector) |

| Specification | Description |
|---|---|
| Mode of operation: | Continuous operation |
| Flammable anesthetics: | Not suitable for use in the presence of flammable anesthetics or a mixture of flammable anesthetics with air or oxygen break="line"?>or nitrous oxide. |

## CARESTREAM DRX Plus 4343F Detector, DRX Plus 4343FC Detector, CARESTREAM DRX Core/ TRIMAX 4343F Detector, DRX Core/TRIMAX 4343FC Detector Medical Electrical Equipment Classification

**Important:**
These devices are intended for building into equipment and are not accessible to patient or operator

.

| Specification | Description |
|---|---|
| Type of protection against electrical shock: | Class II Equipment |
| Degree of protection against electrical shock: | No applied part, not intended for patient contact |
| Degree of protection against ingress of foreign material: | IPX0 |
| Mode of operation: | Continuous operation |
| Flammable anesthetics: | Not suitable for use in the presence of flammable anesthetics or a mixture of flammable anesthetics with air or oxygen or nitrous oxide. |

# Product Safety Standards

| | |
|---|---|
| **USA** | ANSI/AAMI ES60601–1:2005 + Amendment 1:2012—Medical Electrical Equipment—Part 1: General requirements for safety and essential performance |
| **Canada** | CAN/CSA C22.2 No. 60601-1:14—Medical Electrical Equipment—Part 1: General requirements for safety and essential performance (includes Amendment 1) |
| | |
| **European Union** | EN 60601–1:2006 + Amendment 1:2013—Medical Electrical Equipment—Part 1: General requirements for safety and essential performance |
| | EN 60601–1–6:2010 + Amendment 1: 2015—Medical Electrical Equipment—Part 1: General requirements for safety and essential performance—Collateral Standard: Usability |
| | |
| **International** | IEC 60601–1:1988 + Amendment 1:1991 + Amendment 2:1995 —Medical Electrical Equipment |
| | IEC 60601–1:2005 + Amendment 1:2012—Medical Electrical Equipment—Part 1: General requirements for safety and essential performance |
| | IEC 60601–1–6:2010 + Amendment 1:2013—Medical Electrical Equipment—Part 1: General requirements for safety and essential performance—Collateral Standard: Usability–3rd edition |

# EMC Standards

IEC 60601–1–2:2014 includes EMC requirements and tests. Medical Electrical Equipment including CISPR 11:2009 + A1:2010, Group 1, Class A.

# Precautions

## Instructions for Use – General

The DRX detectors are intended to be used in an indoor Professional Healthcare Facility environment except near high frequency surgical equipment or outside the RF shielded room of a medical equipment system for resonance imaging.

The DRX detectors have the following essential performance as defined in IEC 60601-1: Image Retention.

**WARNING:**
Use of this equipment adjacent to or stacked with other equipment should be avoided because it could result in improper operation. If such use is necessary, this equipment and the other equipment should be observed to verify that they are operating normally.

**WARNING:**
Use of accessories, transducers and cables other that those specified or provided by the manufacturer of this equipment could result in increased in increased electromagnetic emissions or decreased electromagnetic immunity of this equipment and result in improper operation.

## Technical Description of DRX Detectors

DRX detectors are considered group 1, Class A for conducted and radiated emissions according to CISPR 11.

**Note:**
The emissions characteristics of this equipment make it suitable for use in industrial areas and hospitals. If it is used in a residential environment (for which CISPR class B is normally required) this equipment might not offer adequate protection to radio-frequency communication services. The user might need to take mitigation measures, such as relocating or re-orienting the equipment.

Basic safety must be maintained by keeping cabinetry and shielding intact as delivered and following the safety and EMC instructions in this guide.

## Requirements Applicable to Equipment That Transmits/ Receives Electromagnetic Energy for Operation

DRX detectors transmit and receive wireless communications with the following characteristics.

| Frequency | Modulation | Power |
|---|---|---|
| 2412-2462 | BPSK, QPSK, 16QAM, 64QAM, DBPSK, DQPSK, CCK | 9.51 dBm |
| 5180-5825 | | 11.83 dBm |

# FCC Notice (United States)

This equipment complies with part 15 of the FCC Rules. Operation of the device is subject to the following two conditions:

1. This equipment may not cause harmful interference.
2. This equipment must accept any interference received, including interference that may cause undesired operation.

This equipment has been tested and found to comply with the limits for a Class A digital device, pursuant to part 15 of the FCC Rules. These limits are designed to provide reasonable protection against harmful interference when the equipment is operated in a commercial environment. This equipment generates, uses, and can radiate radio frequency energy. If it is not installed and used in accordance with the instruction manual, it may cause harmful interference to radio communications. Operation of this equipment in a residential area is likely to cause harmful interference, in which case the users will be required to correct the interference at their own expense.

Changes or modifications not expressly approved by the manufacturer could void the user's authority to operate the equipment.

**CAUTION:**
This is a Class A product. In a domestic environment, this product may cause radio interference, in which case the user may be required to take adequate measures.

# ISED Notice (Canada)

This device contains license-exempt transmitter(s)/receiver(s) that comply with Innovation, Science and Economic Development Canada's license-exempt RSS(s).

Operation is subject to the following two conditions:

1. This device may not cause interference.
2. This device must accept any interference, including interference that may cause undesired operation of the device.

# Guidance and Manufacturer's Declaration for Electromagnetic Emissions

The equipment is intended for use in the electromagnetic environment specified below. The customer or user of the equipment should ensure that it is used in such an environment.

| Emissions Test | Compliance | Electromagnetic Environment—Guidance |
|---|---|---|
| RF emissions:<br>• EN 55011<br>• CISPR 11 | Group 1 | The equipment uses RF energy only for its internal function. Therefore, its RF emissions are very low and are not likely to cause any interference in nearby electronic equipment. |
| RF emissions:<br>• EN 55011<br>• CISPR 11 | Class A | The equipment is suitable for use in all establishments other than domestic and those directly connected to the public low-voltage power supply network that supplies buildings used for domestic purposes. |
| Harmonics emissions:<br>• EN 61000-3-2<br>• IEC 61000-3-2 | Compliant | The equipment is suitable for use in all establishments other than domestic and those directly connected to the public low-voltage power supply network that supplies buildings used for domestic purposes. |
| Voltage fluctuations and flicker emissions:<br>• EN 61000-3-3<br>• IEC 61000-3-3 | Compliant | |

# Electromagnetic Immunity

Carestream Systems are intended for use in the electromagnetic environment specified below. The customer or the user of the System should assure that it is used in such an environment.

| Immunity Test | IEC 60601 break="line"?>Test Level | Compliance break="line"? >Level | Electromagnetic Environment—Guidance |
|---|---|---|---|
| Electrostatic Discharge (ESD)<br>IEC 61000-4-2 | ± 8 kV contact<br>± 2 kV, ± 4 kV,± 6kV<br>± 8 kV, ± 15 kV air | ± 8 kV contact break="line"?><br>± 2 kV, ± 4 kV,± 6kV<br>± 8 kV, ± 15 kV air | Floors should be wood, concrete, or ceramic tile. If floors are covered with synthetic material, the relative humidity should be at least 30 %. |
| Electrical fast transient/ burst<br>IEC 61000-4-4 | ± 2 kV for power supply lines<br>± 1 kV for input/ output lines | ± 2 kV for power supply lines<br>± 1 kV for input/ output lines | Mains power quality should be that of a typical commercial or hospital environment. |
| Surge<br>IEC 61000-4-5 | ± 1 kV line to line<br>± 2 kV line to earth | ± 1 kV line to line<br>± 2 kV line to earth | Mains power quality should be that of a typical commercial or hospital environment. |

| | | | |
|---|---|---|---|
| Voltage dips, short interruptions, and voltage variations on power supply lines<br>IEC 61000-4-11 | < 5 % $U_T$<br>(> 95 % dip in $U_T$) for 0.5 cycle<br>40 % $U_T$ (60 % dip in $U_T$) for 5 cycles<br>70 % $U_T$ (30 % dip in $U_T$) for 25 cycles<br>< 5 % $U_T$<br>(> 95 % dip in $U_T$) for 5 sec | < 5 % $U_T$<br>(> 95 % dip in $U_T$) for 0.5 cycle<br>40 % $U_T$ (60 % dip in $U_T$) for 5 cycles<br>70 % $U_T$ (30 % dip in $U_T$) for 25 cycles<br>< 5 % $U_T$<br>(> 95 % dip in $U_T$) for 5 sec | Mains power quality should be that of a typical commercial or hospital environment<br>**Note:**<br>Most components in the Carestream System are powered from an uninterruptible power supply |
| Power frequency I<br>(50/60 Hz) magnetic field<br>EC 61000-4-8 | 30 A/m | 30 A/m | Power frequency magnetic fields should be at levels characteristic of a typical location in a typical commercial or hospital environment. |

**Note:**
$U_T$ is the mains (ac) voltage prior to application of the test level.

# Guidance and Manufacturer's Declaration for Radio Frequency Immunity

**Except for the Carestream DRX-Evolution Plus System and the DRX-Ascend System, all Carestream products are intended for use in the electromagnetic environment specified below. The customer or the user of the system should assure that it is used in such an environment.**

| Immunity Test | IEC 60601 Test Level | Maximum Power (W) | Tested |
|---|---|---|---|
| For ac power cable conducted disturbances by RF fields IEC 61000-4-6 | 3 V (rms) | | 0.15 MHz, 80 MHz |
| | 6 V (rms) | | In ISM bands between 0.15 and 80 MHz |
| For enclosure port radiated RF fields IEC 61000-4-3 | 3 V (rms) | | 80 MHz to 2700 MHz |
| Proximity fields from RF wireless equipment | 27 v/m | 1.8 | 385 |
| | 28 v/m | 2 | 450 |
| | 9 v/m | 0.2 | 710, 745, 780 MHz |
| | 28 v/m | 2 | 810, 870, 930 MHz |
| | 28 v/m | 2 | 1720, 1845, 1970 MHz |
| | 28 v/m | 2 | 2450 MHz |
| | 9 v/m | 0.2 | 5240, 5500, 5785 MHz |

Interference may occur in the vicinity of equipment marked with the following symbol:

# Wireless Declaration

## Radio Frequency Exposure Declarations

The equipment includes portable wireless devices according to FCC regulation 2.1093 (b). This equipment has been shown to be compliant for localized specific absorption rate (SAR) for uncontrolled environment/general exposure limits specified in ANSI/IEEE standard C95.1–1999. For DRX Plus and DRX Core/TRIMAX detectors, the maximum SAR measurement (averaged over 1 gram of tissue) is 0.15 W/kg. The measured values are well under the spatial peak SAR of 1.6 W/kg specified in FCC regulation 2.1093 d (2) for uncontrolled environment/general exposure conditions.

Under Industry Canada regulations, this radio transmitter may only operate using an antenna of a type and maximum (or lesser) gain approved for the transmitter by Industry Canada.

To reduce potential radio interference to other users, the antenna type and gain should be so chosen that the equivalent isotropically radiated power (EIRP) is not more than that necessary for successful communication.

Conformément à la réglementation d’Industrie Canada, le présent emétteru radio peut fonctionner avec une antenne d’un type et d’un gain maximal (ou inférieur) approuvé pour l’émetteur par Industrie Canada.

# 2 Detector Operation

A detector can be used with analog or digital systems to capture images digitally.

The detector translates into a digital format the X-ray energy absorbed during an X-ray exposure.

Software corrects the digital image for display on the Console.

## Features

- **Portable X-ray receptor**—Used on a table, behind a patient in a bed or wheelchair, in a table, or a wall-mounted Bucky
- **Wireless or Tethered transmission**—These detectors transmit images wirelessly, powered by a battery, or via an optional tether
- **RFID tag**—For use with Consoles that have an RFID reader
- **Removable Battery**

# Cautions

**CAUTION:**

- Follow all safety labels on the equipment.
- For continued safe use of this equipment, follow the instructions contained in this operator's manual.
- Study this manual carefully before using the equipment and keep it at hand for quick reference.
- The equipment must be used only by qualified personnel and only after training in the specific operations. It is the operator's responsibility to ensure the patient's safety while the equipment operates by visual observation, proper patient positioning, and use of the protective enclosure.
- Do not expose the equipment to liquid.
- Perform periodic maintenance to ensure continued safe use of the equipment.
- The equipment must be repaired only by authorized Service personnel.
- The detector is fragile and contains glass. Handle with care! Dropping or handling the detector roughly could result in damage. If the detector is dropped or handled roughly, or if there is any indication of reduced image quality, perform a calibration.
- Any attempt to open the detector by unauthorized personnel will void the warranty.
- If a detector is not used in a Bucky, it must be enclosed in a protective plastic bag that is disposed of after each patient exam.
- Change the detector battery outside the patient vicinity.

# Pediatric Considerations

In order to help ensure that pediatric patients receive the minimum necessary amount of radiation while producing diagnostic quality images, DRX Plus and DRX Core/ TRIMAX detectors support pediatric imaging.

When the Pediatric Support Option is enabled on our systems, a wide range of views for pediatric chest and abdomen imaging are available. These views provide custom technique settings based on weight and/or age using pediatric patient sub-populations for the purpose of minimizing pediatric dose. Additionally, the system software provides detector dependent (varies based on detector type (GOS or CsI), exposure indicators for all views to be used by radiographers as a means of monitoring and tracking exposure levels.

Search the Online Help, "Pediatric Support Option" and "IEC Exposure Indicators Overview" for more information.

Further information regarding special considerations for pediatrics can be found at the following websites:

- Image Gently Campaign: http://www.imagegently.org/
- FDA's Pediatric X-ray Imaging: http://www.fda.gov/Radiation-EmittingProducts/ RadiationEmittingProductsandProcedures/MedicalImaging/ucm298899.htm
- Carestream's solutions for Pediatrics: http://www.carestream.com/medical/solutions/ pediatric-imaging.html

# Change Battery

You can change the detector battery without causing the detector to reboot or lose wireless connection.

Remove the battery and replace it within 15 seconds and the detector will continue to run. If the battery is removed for more than 15 seconds, the detector will shut down.

**Note:**
If left undisturbed, the detector will remain active until the battery runs out.

# Insert the Battery Into the Detector

1. Place a fully charged battery in the battery footprint in the detector so that the contacts on the back edge of the battery are inserted first. The battery fits into the detector only one way. See the *CARESTREAM DRX-1 System Battery and DRX Detector Battery User Guide* for technical information about the battery.
2. Push the battery down firmly until the latch catches.

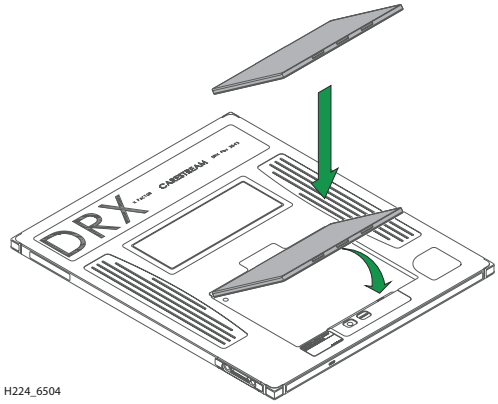

# Battery Unlatch Procedure

Battery unlatch procedure for the detector battery:

1. Place the detector on a flat surface.
2. With one finger, press and hold the round button to release the latch (1).
3. With another finger, simultaneously pull the tab (2) away from the battery.
   Both actions are required to release the battery.

**Note:**
Do not pull on the latch tab (3) or the spring (4). If this happens, the latch will lock open. Repeat the battery unlatch procedure to reset the tabs.

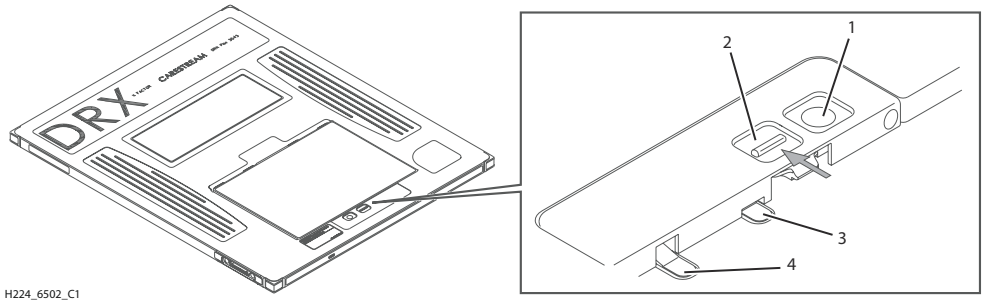


The battery pops up and releases for easy removal.

# Position the Detector in a Bucky

For optimum performance, it is important to position the detector properly in a Bucky when performing an exam.

These labels indicate detector orientation for portrait and landscape exams. To orient the detector properly, hold the detector so that the position of the ID label on the detector matches the position of the orientation label on the portrait or landscape label on the Bucky.

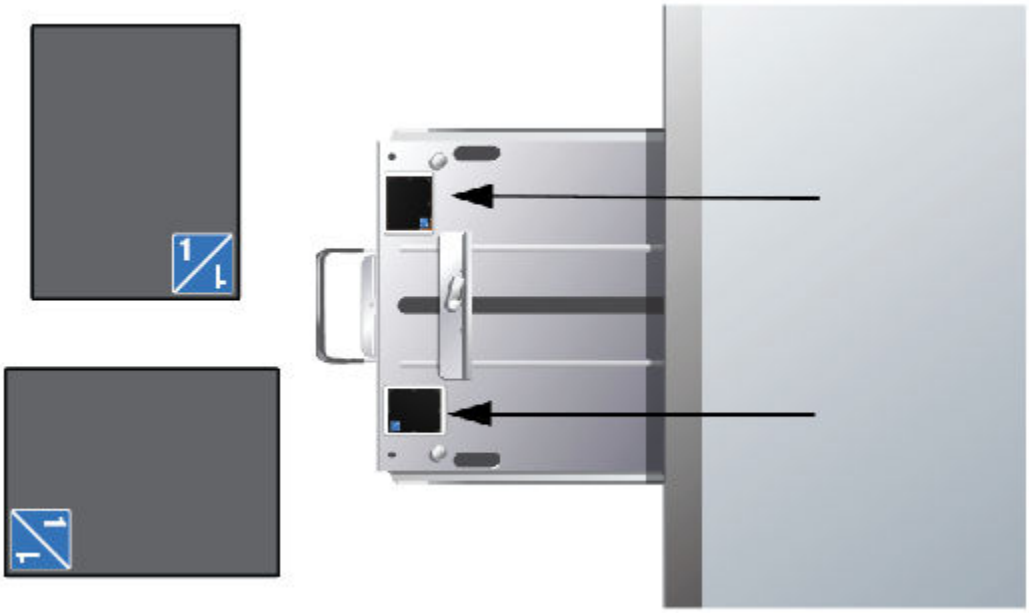

This label indicates detector orientation for portrait and landscape exams with the DRX Plus 3543 Detector and the DRX Plus 4343 Detector when used in the DRX Evolution System and DRX Evolution Plus System. To orient the detector properly, hold the detector so that the position of the ID label on the detector matches the position of the orientation label on the portrait or landscape label on the Bucky.

**Note:**
Incorrect orientation will result in the detector running on battery power in the wireless operation mode. If the detector is not orientated correctly, the detector identification icon will display with a question mark.

# Using Detectors

## Using a Single Detector

Typically, the detector is registered with the Console for a particular room, but you can register it with other Consoles in other rooms as well, or use it with mobile systems.

See *Adding and Registering a Detector* in the *System Software Online Help*.

## Using Two or More Detectors in One Room

Using two or more detectors in a room makes detector identification even more important. Make sure that the label on the detector matches the label displayed on the Console.

## Using Detectors in Two or More Rooms

The identification labels make it easy to prevent the mixing of detectors from one room to another. Keep a different color scheme for each room and then subsequent detectors can be assigned labels within that color.

You can register the same detector on two consoles. For example, you may use one detector as a *float* detector.

The System is designed so that if the Console cannot communicate with the selected detector, it will display a Not Ready status.

See the *System Software Online Help* for information about workflow.

# Connect a Tether to the Detector

Place the metal end of the tether on the magnetic bar on the side of the detector.

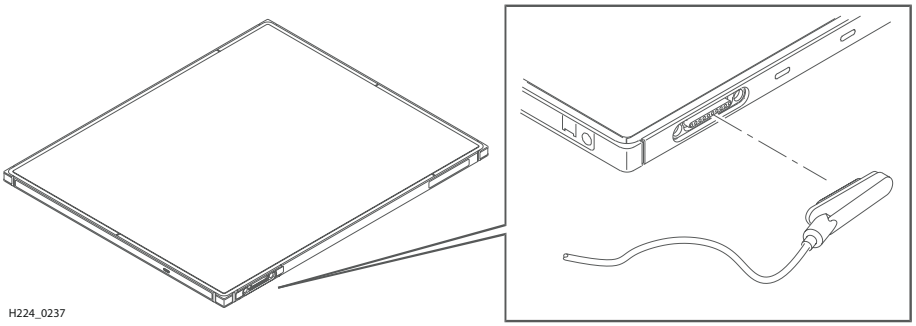

# LED Display Matrix

## Key

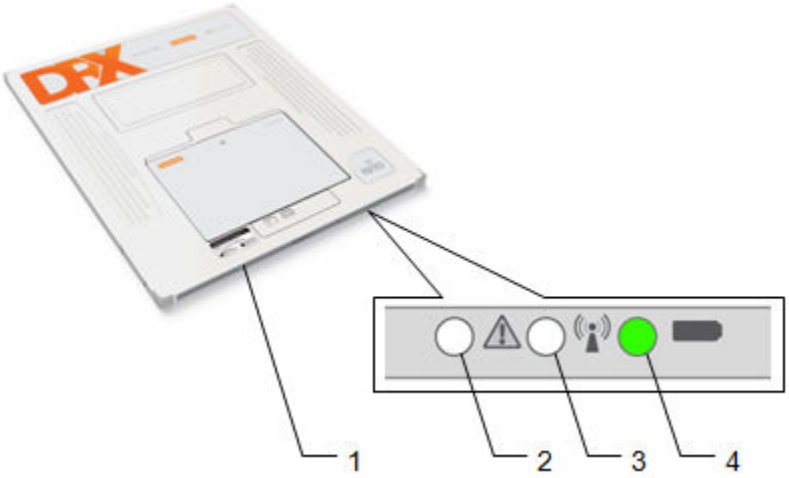


The drawing above locates the Reset button (1), and the LEDs that indicate Error (2), Communication (3), and Power (4).

| LED | Description |
|---|---|
| | Blue |
| | Green |
| | Magenta |
| | Orange |
| | Yellow |
| | Double circle (any colors) indicates blinking |

## Error Status

| LED Indicator | Condition | Meaning |
|---|---|---|
| | | |
| | Off | No power, or the detector is asleep, or detector is connected to the host. You can make an exposure if the Power LED is green or yellow. |
| | Blinking | The detector is booting. |
| | Blinking | Wireless associating and authenticating to network. |
| | Blinking | Shock is recorded and calibration has failed. |
| | On | Shock is recorded and calibration is recommended. |

## Communication Status

| LED Indicator | Condition | Meaning |
|---|---|---|
| | | |
| | Off | No power, or the detector is asleep. You may make an exposure if the Power LED is green or yellow. |
| | Blinking | The detector is booting. |
| | Blinking | Wireless associating and authenticating. |
| | On | Authenticated on wireless network or Ethernet on tether. |
| | On | The detector is connected but the console is not ready to expose. |

## Power Status

| LED Indicator | Condition | Meaning |
|---|---|---|
| | | |
| | Off | No power, or the detector is asleep. |
| | Blinking | The detector is booting. |
| | On | The detector is Ready, and the battery is good. |
| | On | The detector is Ready, and the battery is low. Limited exposures are remaining. |
| | On | The power is on, and the battery is below imaging level. |

# Reset Button

The **Reset** button is located on the side of the detector. It is intended for a quick restart of the detector software, similar to the action of removing and reinserting a battery.

**Note:**
Pressing and holding the **Reset** button for more than 5 seconds disrupts the detector and causes an immediate hard shutdown. A hard shutdown should only be used when directed by a Service provider or as a part of troubleshooting a serious condition.

| Reset Button | Action |
|---|---|
| Press once | Detector software restart |
| Press and hold ≥ 5 sec | Hard shutdown and reboot |

**CAUTION:**
Improper use of the **Reset** button could disable the detector.

# 3 Detector Overview

## Transport and Storage Environment

| | |
|---|---|
| Temperature | –10 to 66 °C (+14 to 150 °F) |
| Relative Humidity | 10–86 % RH Non-Condensing |
| Altitude | –31 to 3,658 m (–102 to 12,000 ft) |

**Note:**
The following graphic is applied to the shipping package and describes the conditions that should be met while the package is in transit and storage.

**Note:**
The following graphic is shown for reference only. The actual shipping label may vary slightly.

**Note:**
The first box of the Transport Storage Environment label above indicates: **1016–644 hPa (–31 to 3,658 m), non-pressurized aircraft**.

## Operating Environment

| | |
|---|---|
| Temperature | 15–30 °C (59–86 °F) |
| Relative Humidity | 10–86 % RH |
| Altitude | 3,000 m (9,843 ft) |

# Equipment Maintenance

## Cautions

**CAUTION:**

- Do not operate the equipment when cleaning the equipment.
- Do not immerse the equipment in liquid.
- Do not spray cleaning solution directly onto the equipment.

**CAUTION:**
Isopropyl alcohol is a flammable solvent. Read and follow instructions in the Safety Data Sheet (SDS).

# Procedure to Clean the Detector

**Prerequisites:**

- Appropriate cleaning solution, for example, 70 % isopropyl alcohol solution
- Clean, soft cloth

1. Disconnect the detector from its power source.
   - » Remove the tether.
   - » Remove the battery.
2. Moisten a cloth with the cleaning solution.
3. Apply the moistened cloth to the equipment.

**Postrequisites:**

Make sure the detector is dry before using it.

# Procedure to Clean the Battery Well

1. Wipe the well in the detector clean of dust or debris with a soft cloth.
2. Use a soft brush or vacuum to clean out the prongs in the battery well.

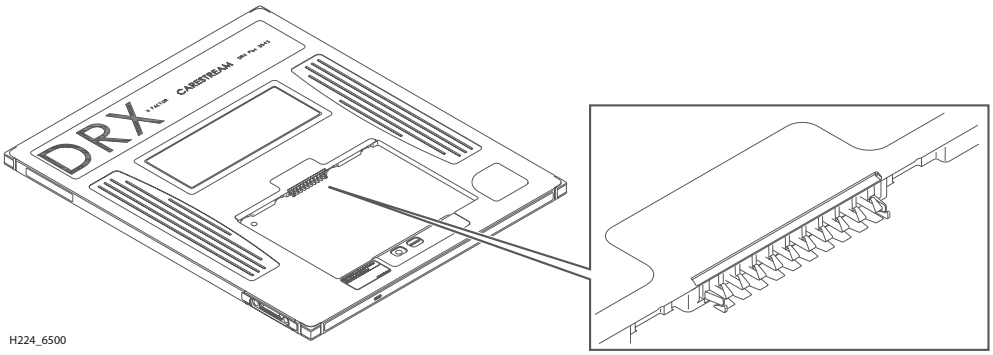

# Patient Contact

With each occurrence of patient contact:

1. Moisten a cloth with a cleaning solution.
2. Apply the solution to the patient contact area.

**CAUTION:**
Do not spray solution directly onto the equipment.

**Note:**
When a detector is not used in a Bucky, it should be enclosed in a protective plastic bag that is disposed of after each patient exam.

# Weight Label

**CAUTION:**
Since the detector is not a patient support device, it must be placed on a suitable surface, such as a table or floor, before applying patient weight to it. The weight label indicates acceptable limits of use that will not damage the detector. To prolong the life of the detector and minimize potential internal detector damage, observe the following weight restrictions:

- The maximum concentrated weight over a small area of the detector surface 50 mm (2 in.) in diameter must not exceed 114 kg (250 lb).
- The maximum distributed weight applied uniformly over the entire detector surface is 170 kg (375 lb).
- If a patient stands directly on the detector and damage occurs, this is an indication that the load limit has been exceeded and is not covered by warranty. Patients can easily apply a force greater than their weight over a small area, depending on how they step onto and continue to stand on the detector.
- A weight-bearing cassette cap must be used if a patient stands on the detector.

# Back-up Battery Information

**CAUTION:**
The manufacturer assumes no liability for problems that occur when you do not follow these cautions, as well as the general cautions outlined in the Safety and Regulatory information in this manual.

The Lithium Ion back-up battery is not customer replaceable. The battery can only be replaced by a trained Service representative.

**CAUTION:**
The battery can explode, leak, or catch fire if it is exposed to high temperature, water, or fire. Do not short-circuit, open, or disassemble the battery. Recycle or dispose of properly.

### Disposal

Dispose of used batteries according to the manufacturer's instructions. At the end of its useful life, properly dispose of the battery following all local regulations.

## Disposal

In the European Union, this symbol indicates that when the last user wishes to discard this product, it must be sent to appropriate facilities for recovery and recycling. Contact your local representative or refer to http://recycle.carestreamhealth.com for additional information on the collection and recovery programs available for this product.

# Power Failures

There are various types of power disruptions that can affect a system: voltage sags, voltage surges, brownouts, line noise, high voltage spikes, frequent variations, switching transients, and harmonic distortions. These disruptions can be minimized by an Uninterruptible Power Supply (UPS). The System may or may not include a UPS.

**Note:**

A UPS provides back-up power in the event of a power failure. A UPS also conditions the power provided to the System. Back-up power will last for a specific length of time, dependent on the UPS energy storage capacity and the power requirements of the equipment. If you choose to provide a UPS for your System, follow the manufacturer's recommendation for use and battery replacement.

# Publication History

| Publication No. | Version | Date | Changes |
|---|---|---|---|
| AB6232 | A | 2015-03-15 | Initial Release |
| AD7006 | A | 2016-04-29 | • Added information for the 4343 detector to *Medical Equipment Classification* section.<br>• Updated the Product Safety Standards.<br>• Added information to *Position the Detector in a Bucky* section.<br>• Added *Pediatric Considerations* section.<br>• Updated the specifications for Transport and Storage Environment.<br>• Added *Power Failures* section. |
| AD7006 | B | 2016-09-23 | Changed all occurrences of "DRX Core" to "DRX Core/TRIMAX" |
| AD7006 | C | 2019-03-05 | Updated copyright information |
| AD7006 | D | 2019-04-17 | • Updated:<br>  • Safety and Regulatory Information<br>  • EMC Standards<br>  • Precautions<br>  • Electromagnetic Immunity<br>  • Pediatric Considerations<br>  • Using Detectors<br>  • LED Display Matrix<br>• Added Guidance and Manufacturer's Declaration for Radio Frequency Immunity |

| Publication No. | Version | Date | Changes |
|---|---|---|---|
| AD7006 | E | 2021-03-10 | • Updated address of Authorized Representative (European Union).<br>• Removed Importer for European Union.<br>• Added Medical Device symbol. |
| AD7006 | F | 2021-06-10 | • Updated Precautions<br>• Removed Recommended Separation Distance<br>• Added ISED Notice (Canada) |

MD

Medical Device: Any serious incident that may occur in relation to this device should be reported to the manufacturer and the national competent authority.

Carestream Health, Inc.

150 Verona Street

Rochester, NY, USA 14608

© Carestream Health, Inc., 2021

Made in USA.

CARESTREAM is a trademark of Carestream Health.

Pub. No. AD7006

Rev. F

CE 2797

**"Rx only"**