AMERICAN BOOSTER®

B-10K
User Guide

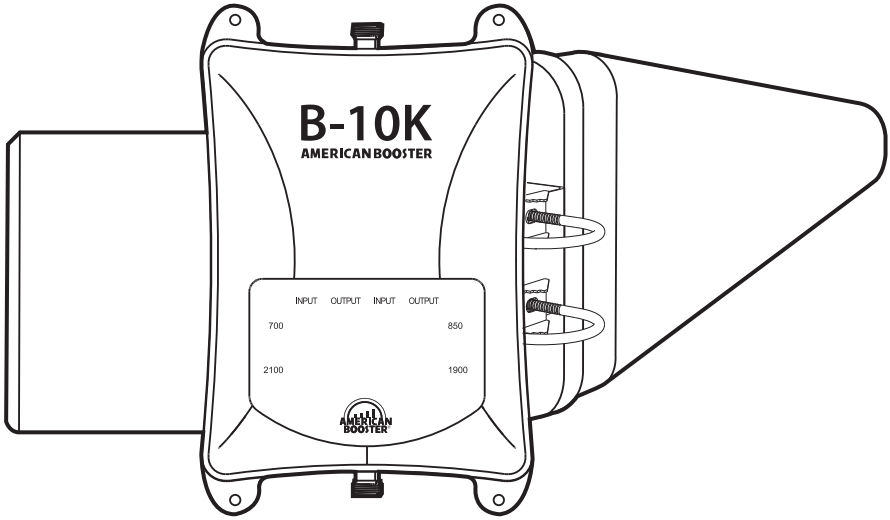

Building Cellular Signal Booster

This publication provides instructions for installing **Cellular Signal Booster B-10K.**

Copyright© 2018, American Booster Inc.
All Rights Reserved.

Revision History

Date	Version	Changes
2018, November	Version 1.0	Original

Certification

This equipment complies with the FCC directives.

INDEX

Product Introduction ---- 4
Package Contents ---- 5
Application Example ---- 6
B-10K Optional Components ---- 7
Installation Guide ---- 8
STEP 1. Find the Strongest Signal ---- 8
STEP 2. Install the Outside Antenna ---- 10
STEP 3. Run the Outside Antenna Cable ---- 12
STEP 4. Install the Inside Antenna ---- 14
STEP 5. Install the Signal Booster ---- 16
LED Status & Troubleshooting ---- 18
LED Bar Display ---- 20
Functions ---- 21
Specifications ---- 22
Safety Guidelines ---- 23
Warranty ---- 25
Memo ---- 26

B-10K

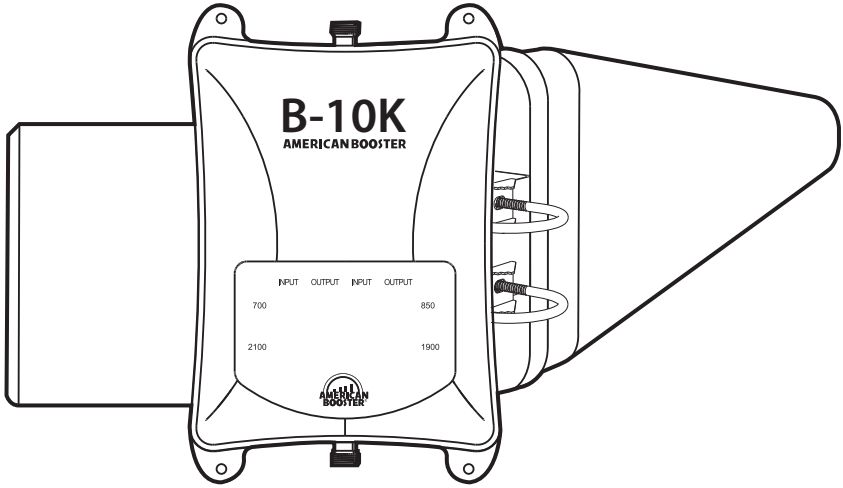

American Booster® B-10K has been designed to improve and extend cellular coverage inside the buildings. B-10K amplifies signals from the nearest base station and re-transmits them at higher power level. B-10K provides service at 700MHz LTE, 850MHz Cellular, 1900MHz PCS and 2100MHz AWS frequencies without any additional setup or configuration.

How it works

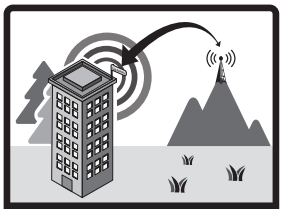

Receives Signal

The signal booster's outside antenna receives voice and data signals from a nearby cell tower.

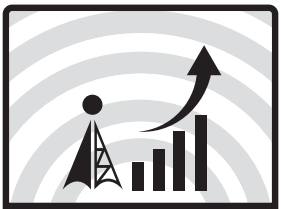

Receives Signal

The signal booster receives the signal from the outside antenna and after amplifying the voice and data signals, sends them to the inside antenna.

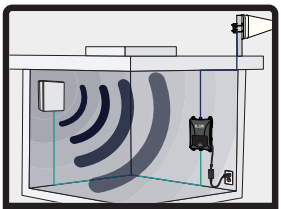

Improves Signal

The inside antenna distributes the boosted signals inside your building.

Package Contents

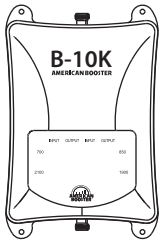

Signal Booster B-10K
Code No. : 0179

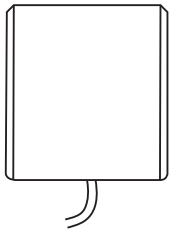

Inside Antenna Kit
Code No. : 83616

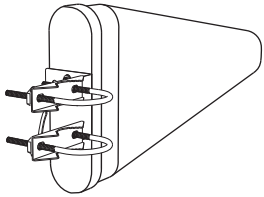

Outside Antenna Kit
Code No. : 83615

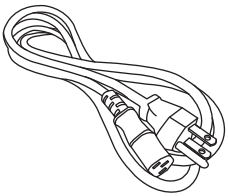

AC Power Cord
Code No. : 82W54

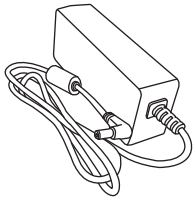

AC/DC Adaptor
Code No. : 833PU

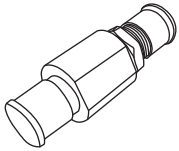

Lightning Protector
Code No. : 834TJ

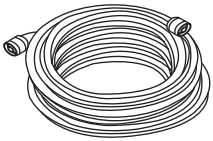

Coaxial Cable 75 ft.
Code No. : 836WN

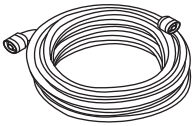

Coaxial Cable 60 ft.
Code No. : 834TM

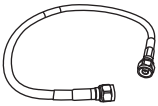

Coaxial Cable 2 ft.
Code No. : 834TK

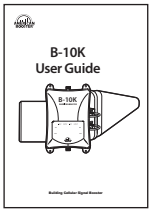

User Guide

Application Example

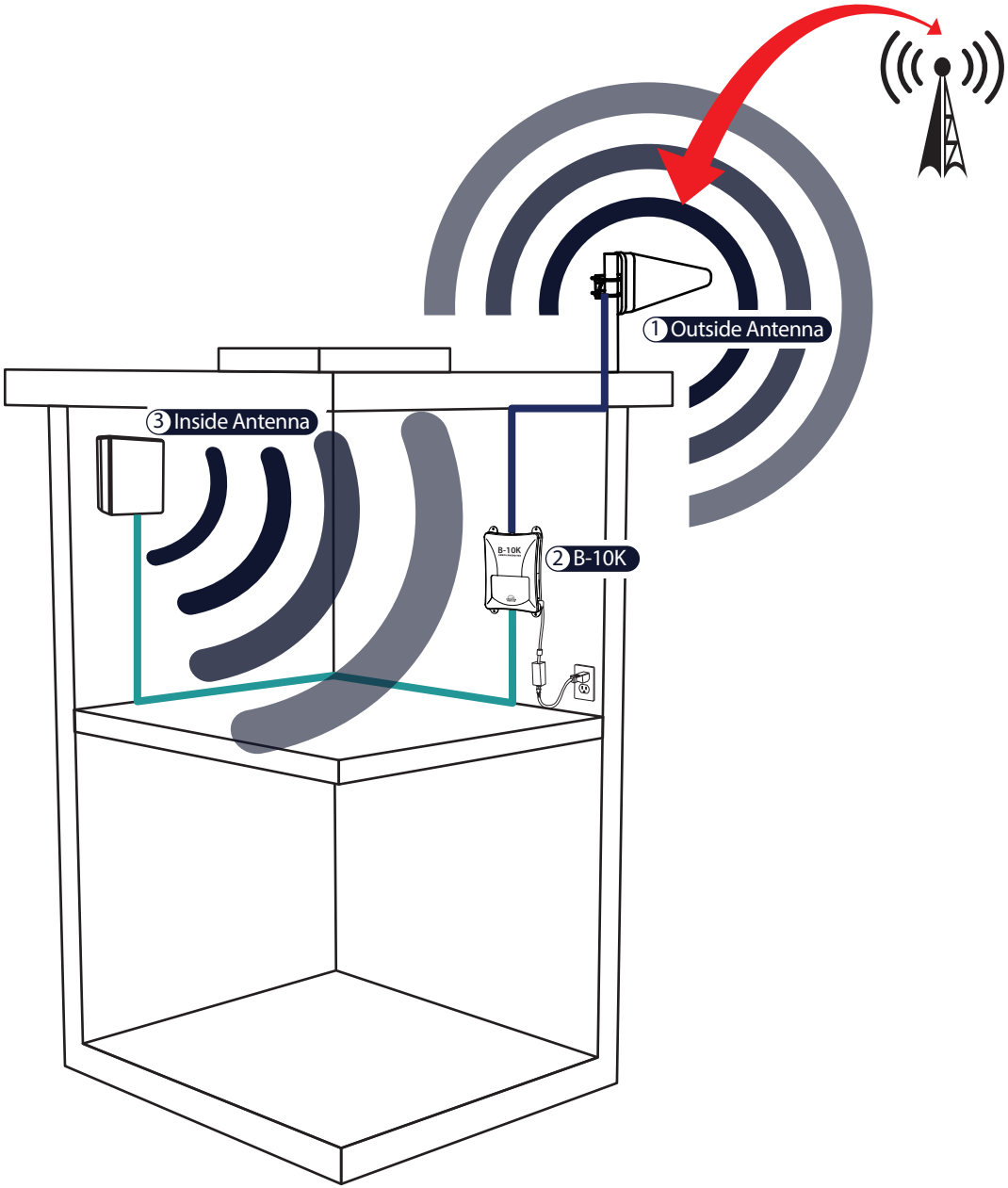

B-10K Optional Components

Optional components enable signal amplification to a further area.

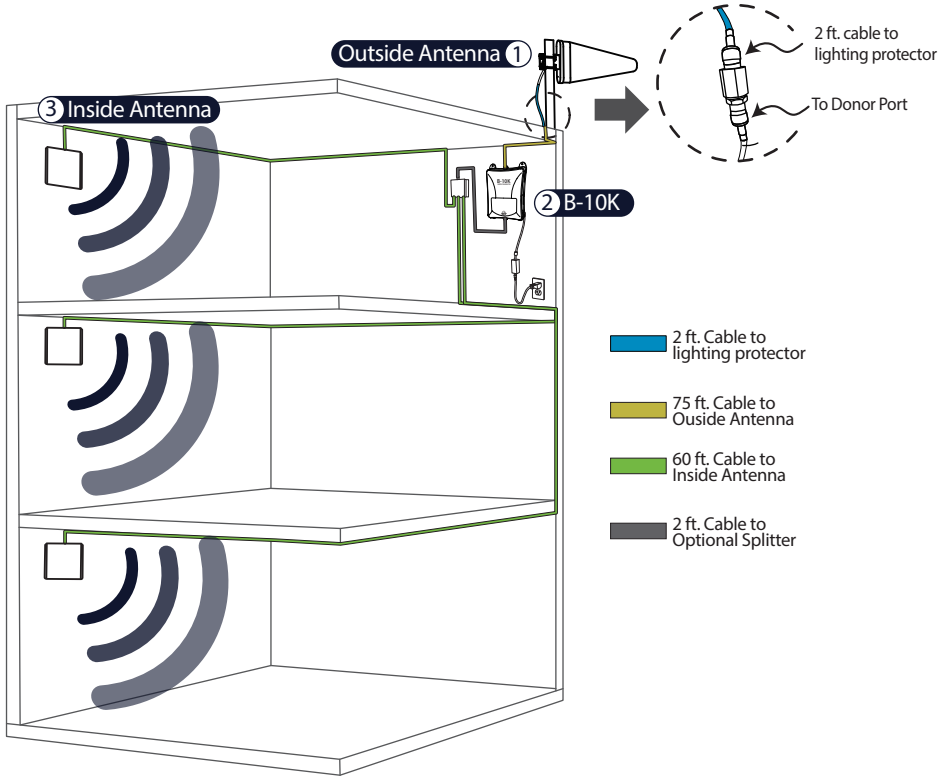

Option Contents

Using multiple inside antennas for increased coverage.

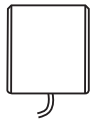

Inside Antenna Kit
Code No. : 83616

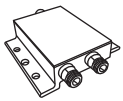

Optional Splitter
(2-Way)

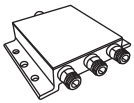

Optional Splitter
(3-Way)

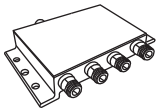

Optional Splitter
(4-Way)

Coaxial Cable 75 ft.
Code No. : 836WN

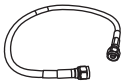

Coaxial Cable 2 ft.
Code No. : 834TK

STEP 1. Find the Strongest Signal

1-1. Using an iPhone®
Dial *3001#12345#*, then press Call.

1-2. Using an Android™
Download the 'Network Signal info" from the Google Play store.
After installing, you will be able to view your dB strength.

1-3. Using a Meter
If you have a meter that detects and displays the current signal levels, you can use it.

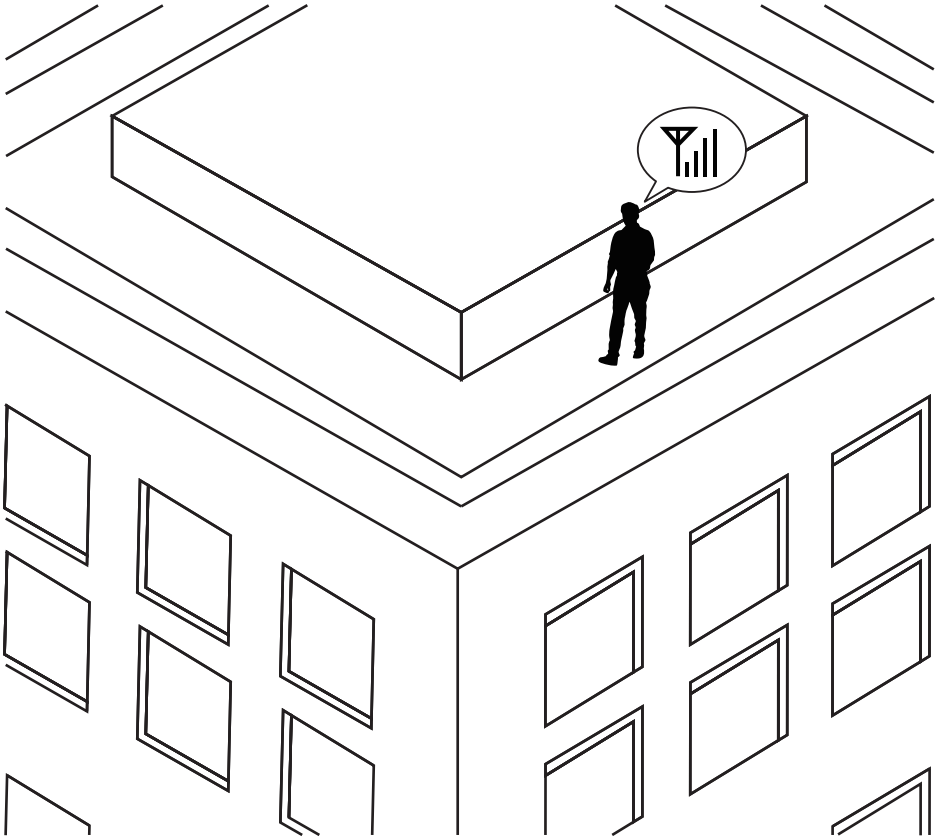

STEP 1. Find the Strongest Signal

Note The stronger signal you receive from the base station, the better coverage you will have inside your building.

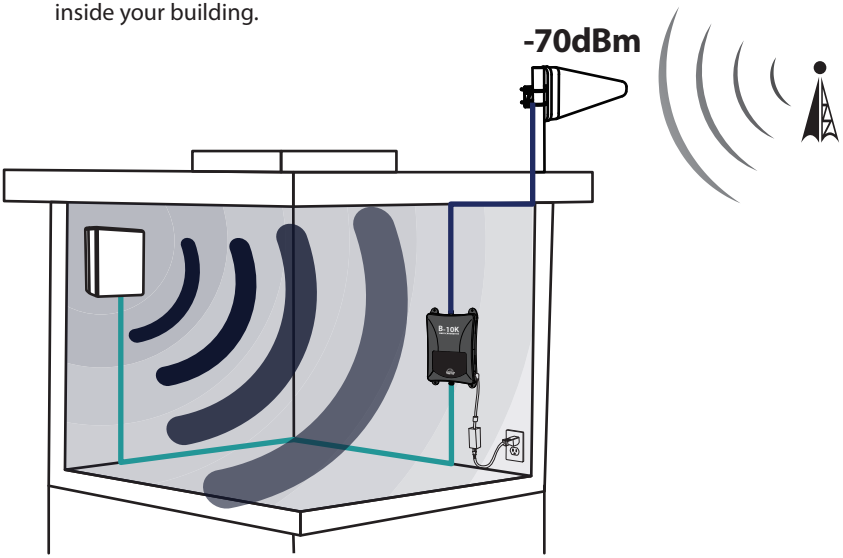

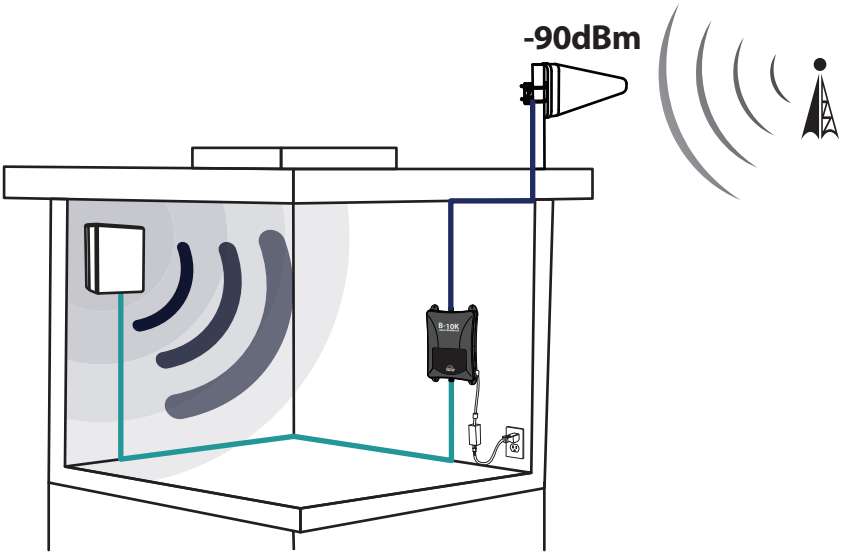

STEP 2. Install the Outside Antenna

The outside antenna must be mounted outside the building with the strongest cell signals. Mount the outside antenna as high as possible facing towards the desired location of the cell tower and facing the opposite direction of the expected location of the inside antenna.

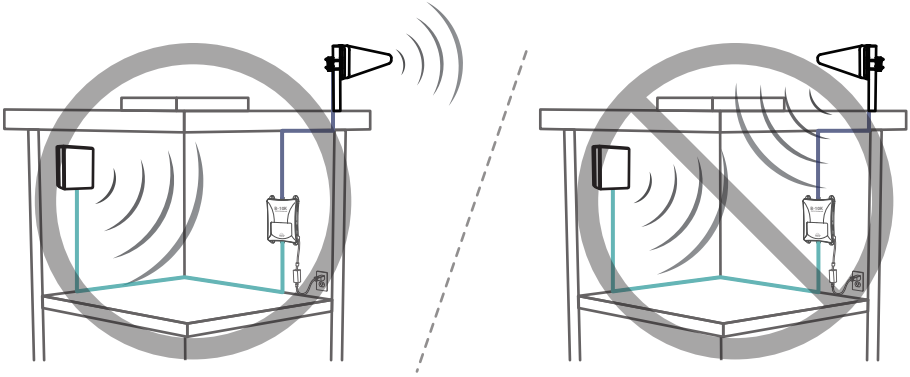

Outside / Inside Antenna Separation

For the best performance, a minimum of 50 ft. distance between outside antenna and inside antenna is recommended. The bigger the separation distance from the antenna, the higher the coverage provided by the booster. However the smaller the separation distance, the lower the coverage provided by the booster.

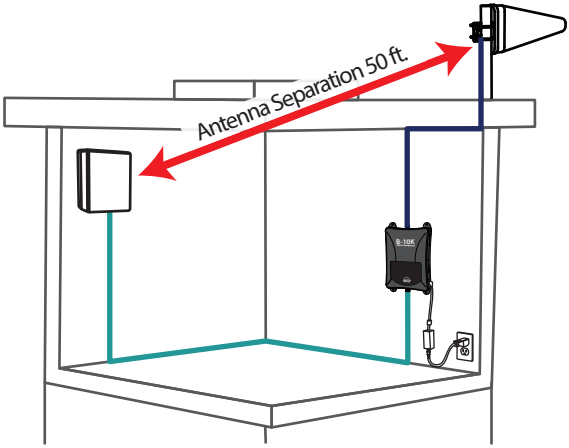

STEP 2. Install the Outside Antenna

Install the outside antenna in the location to receive the strongest signal according to the instructions of STEP2. Make sure the outside antenna is installed facing towards the cell tower.

❶

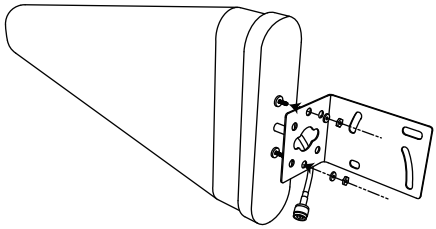

❷

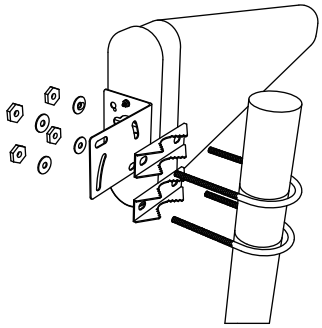

❸

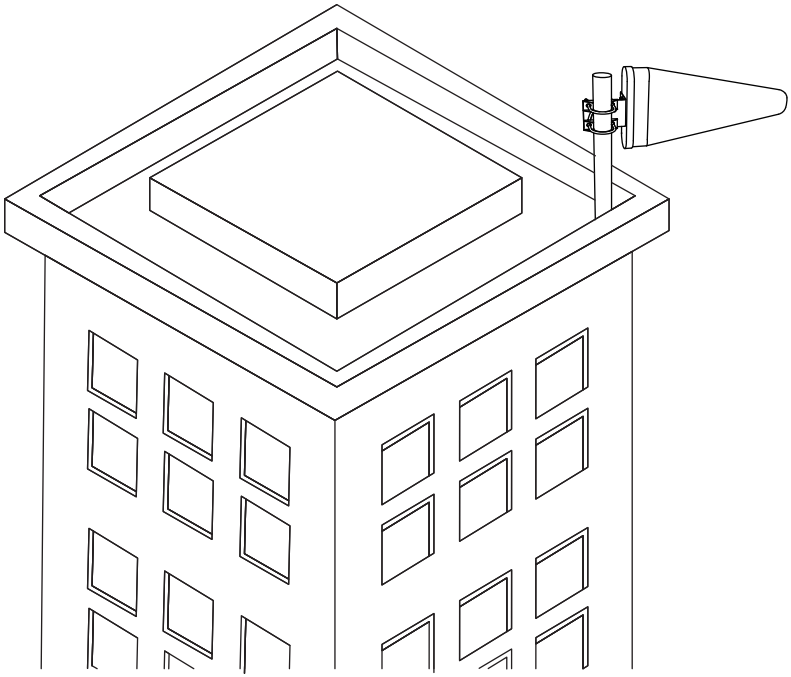

STEP 3. Run the Outside Antenna Cable

When mounting the outside antenna to the outside wall of your building, the easiest way is to run the cable on the outside of the wall and attach it to the exterior of your office & building.

Then drill a hole through the wall which will allow the cable to appear on the inside of the building. To avoid any potential harm or damage, make sure that there are no electrical outlets, sewer water pipes, or electrical wiring in the wall before drilling.

Note TV cables already being used for other purposes can not be shared with the cell booster during installation.

After drilling the required hole, run the cable through and seal it.
In some instances, it may be possible to run the cable up into the fascia of the attic overhang. In this circumstance, the cable will be accessible in the attic further routing.

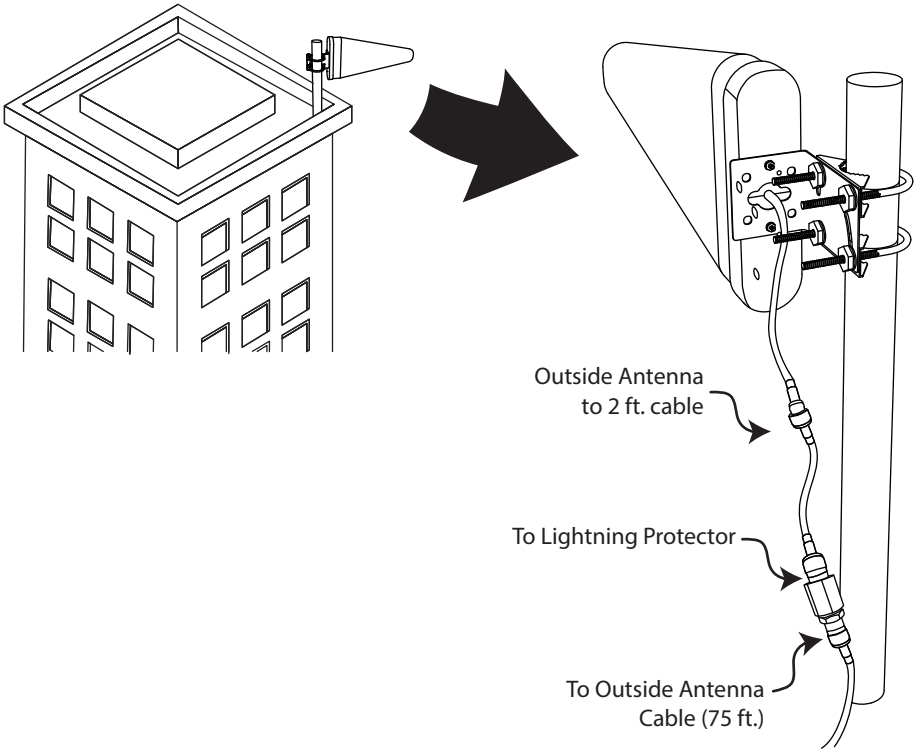

STEP 3. Run the Outside Antenna Cable

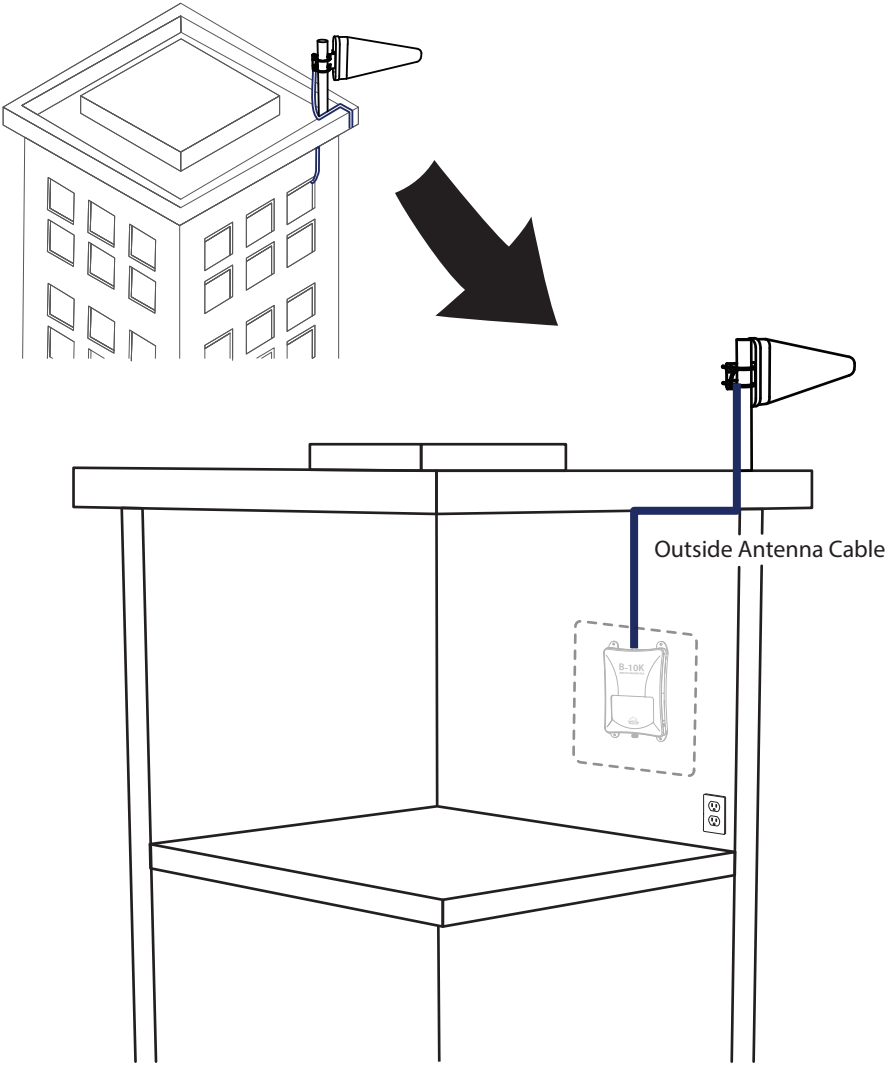

STEP 4. Install the Inside Antenna

Choose a location for the inside antenna, more advantageously at the center of where the signal needs to be amplified.

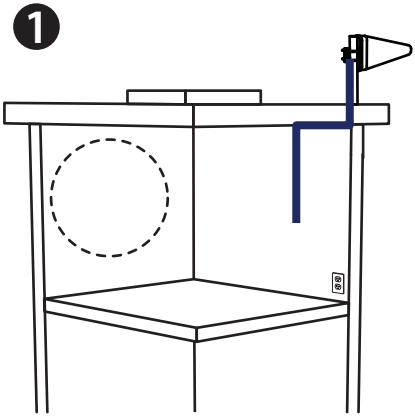

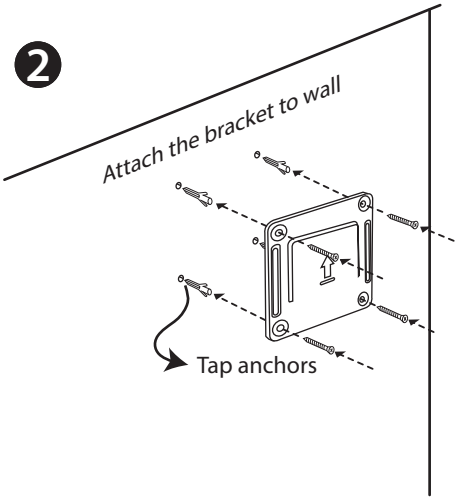

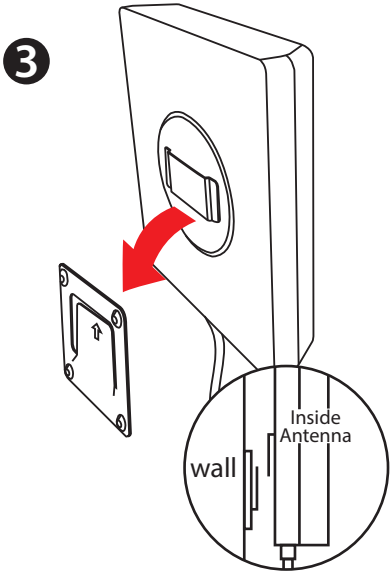

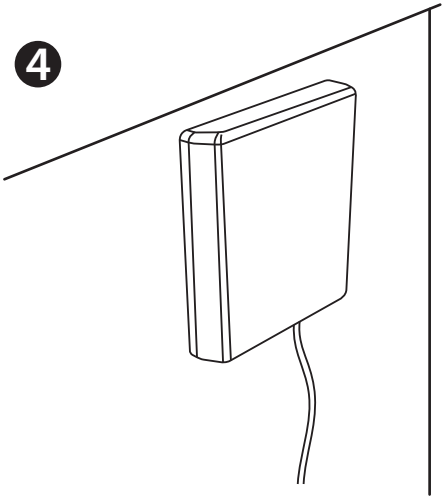

STEP 4. Install the Inside Antenna

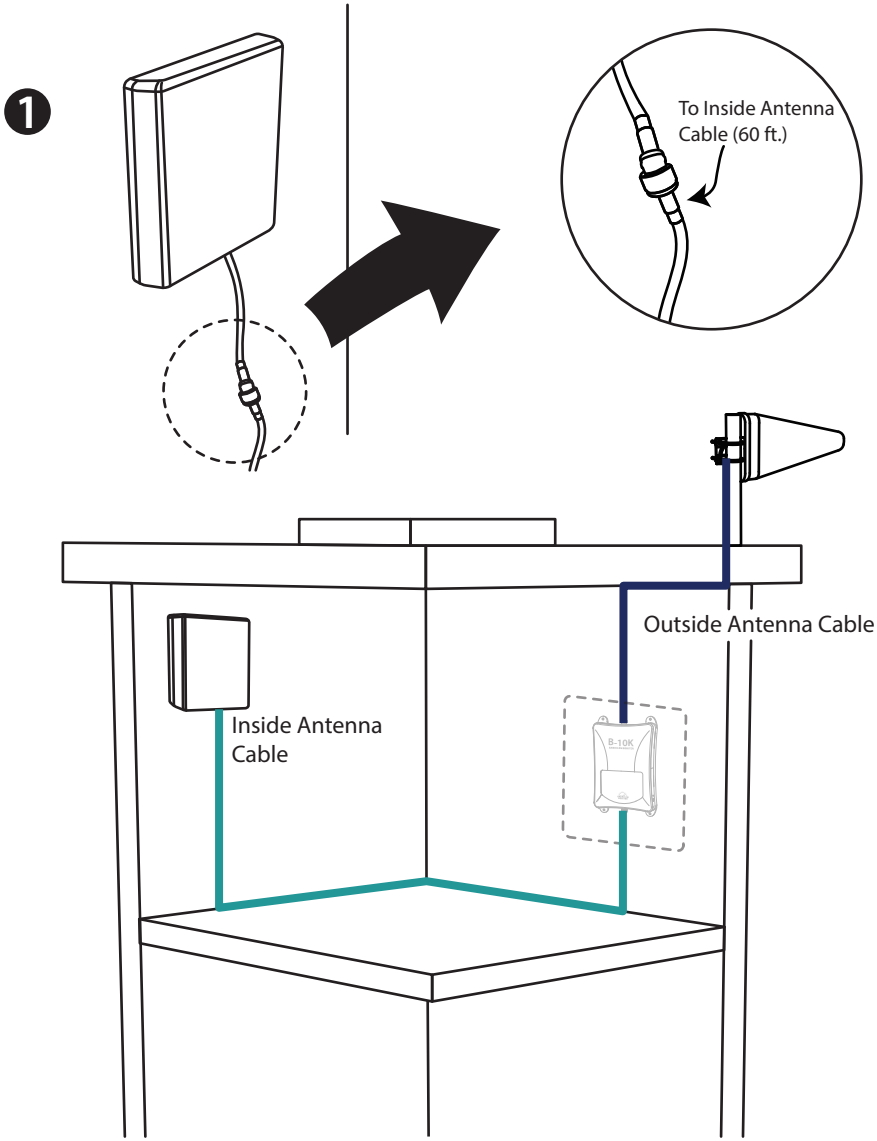

STEP 5. Install the Signal Booster

Choose a location for the signal booster, preferably away from excessive heat, direct sunlight, moisture and is free from high temperatures. Do not place the signal booster in an air-tight enclosure. Attic installations may expose the booster to high heat.

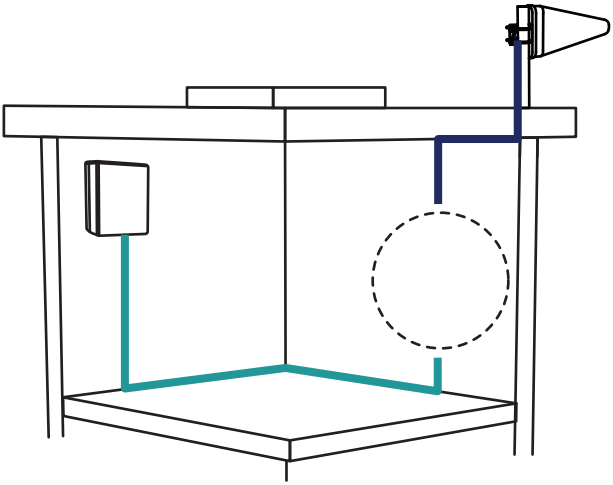

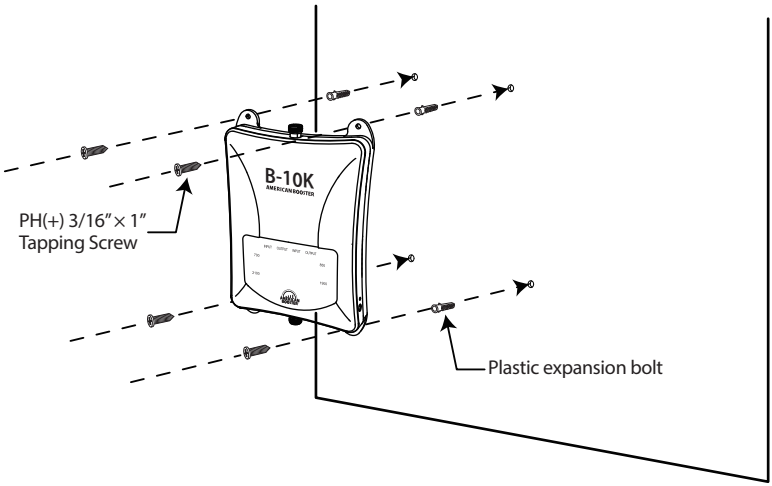

STEP 5. Install the Signal Booster

❶

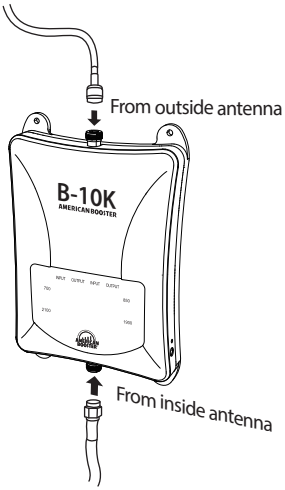

❷

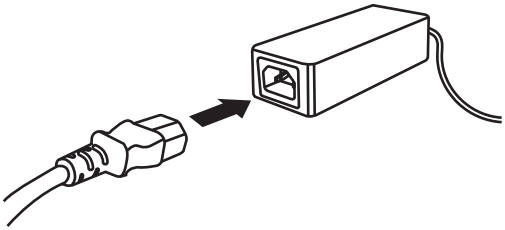

❸

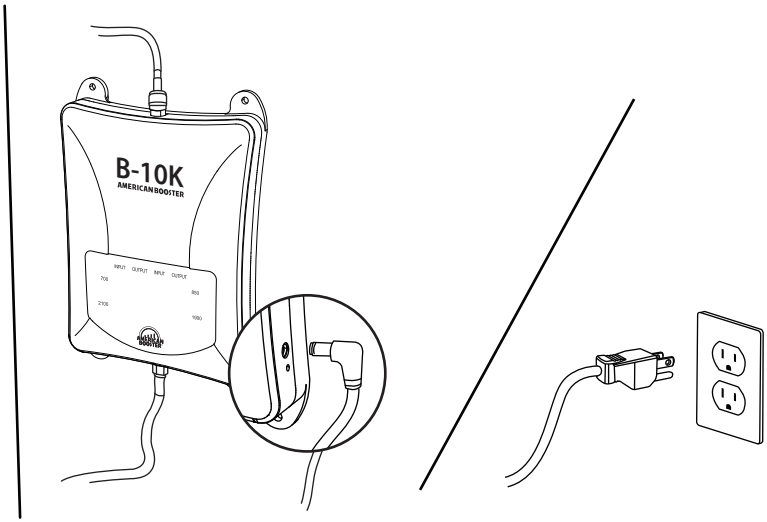

LED Status & Troubleshooting

LED Status	Description	Troubleshooting
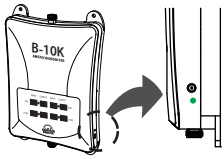	Green indicates the Signal Booster is powered, and working properly.	No troubleshooting is required.
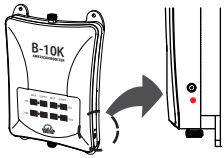	AC/DC adapter is damaged. Or AC outlet does not provide power.	Verify that AC/DC adapter's cable is not damaged. Or Check if the AC outlet is working and not controlled by a wall switch that can cut power to the outlet.
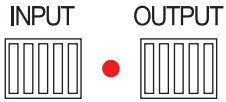 Flashing Red	Isolation between the outside and inside antennas is being checked now. It will take up to 25 seconds.	No troubleshooting is required.
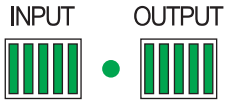 Status LED is green. Input and output bars are green	Isolation between the outside and inside antennas is good and the Signal Booster is working properly.	No troubleshooting is required.

LED Status	Description	Troubleshooting
INPUT OUTPUT Status LED is red. Output bars are flashing green.	Outside antenna and Inside antenna are not isolated enough from each other. So the Signal Booster is shutdown at this frequency.	Change the position of Outside and Inside antennas. Make sure the Outside antenna is not facing towards your own roof or at the inside antenna as this will cause isolation issue and the signal booster will stop amplifying signals at this frequency.
INPUT OUTPUT Flashing Red during 30 mins, then Solid Red.	Uplink Signal coming from the outside antenna to Base Station is too strong and may cause troubles to carriers network, so the Signal Booster stops service at this frequency.	Change the position of Outside and Inside antennas. Make sure the Outside antenna is not facing towards your own roof or at the inside antenna as this will cause isolation issue and the signal booster will stop amplifying signals at this frequency.
INPUT OUTPUT	Signal from BTS station is too weak.	Change the position of Outside antenna to receive stronger signal from Base Station.
INPUT OUTPUT INPUT OUTPUT	Outside antenna and Inside antenna is not isolated enough from each other.	Change the position of Outside and Inside antennas. Make sure the Outside antenna is not facing towards your own roof or at the inside antenna as this will cause isolation issue and the signal booster will not be able to amplify signals at maximum power.
INPUT OUTPUT	The Signal Booster works properly.	

LED Bar Display

Number of LED bars on the front side of the Signal Booster will show input and output signal strength levels. The tables below indicate the signal strength levels.

Service band: 700MHz, 850MHz

LED Status			
LED bars	Input Power	LED bars	Output Power
	≤-86dBm		≤-26dBm
	-85dBm ~ -76dBm		-25dBm ~ -16dBm
	-75dBm ~ -66dBm		-15dBm ~ -6dBm
	-65dBm ~ -56dBm		-5dBm ~ 4dBm
	≥ -55dBm/Total		≥ 5dBm/Total

Service band: 1900MHz, 2100MHz

LED Status			
LED bars	Input Power	LED bars	Output Power
	≤-91dBm		≤-26dBm
	-90dBm ~ -81dBm		-25dBm ~ -16dBm
	-80dBm ~ -71dBm		-15dBm ~ -6dBm
	-70dBm ~ -61dBm		-5dBm ~ 4dBm
	≥-60dBm/Total		≥5dBm/Total

Functions

ALC (Auto Level Control)

ALC maintains limit of the output power in order to protect bad influence to the Base Station.

AGC (Auto Gain Control)

The Signal Booster checks isolation between inside and outside antennas once a day.
AGC sets up downlink and uplink gain value automatically depending on the input power level.

ASD (Auto Shutdown)

There are two cases when ASD works.

1) Outside antenna and Inside antenna are not isolated enough from each other.
   So in order to protect the Signal Booster from damage, it will automatically shutdown at this frequency.

2) Uplink Signal coming from the outside antenna to Base Station is too strong and may cause troubles to carriers network, so the Signal Booster will shutdown at this frequency.

LED Display

Number of LED bars on the front side of the Signal Booster will show input and output signal strength levels.

Specifications

Parameter	Downlink	Uplink	Remark
700MHz LTE	734~756MHz	704~716MHz	Band 13 & 17
		776~787MHz	Band 13
850MHz Cellullar	869~894MHz	824~849MHz	Band 5
1900MHz PCS	1930~1995MHz	1850~1915MHz	Band 25
2100MHz AWS	2110~2155MHz	1700~1755MHz	Band 4
Composite Power	5dBm	20dBm	
Maximum Gain	60dB (700 & 850) , 65dB (1900 & 2100)		
Noise Figure	6dB nominal		
EVM / Spurious Emission	3GPP & FCC Rule Complaint		
ANT Isolation Setting	Gain + 15dB @ Initialization or Recheck		
Impedance	50 Ohm		
RF Connector	N-Type Female		
Power Connector	DC-005 2ø		
Power	7.5VDC x 5.4A		
Size, inch	6.92 x 10.62 x 1.61		W × H × D
Weight, lbs	3.2		
Operation Temperature	14 ~ 122°F (-10°C ~ +50°C)		
Humidity	0 ~ 80%		
Material / Coating	AL / Flame Proof		

⚠ Safety Guidelines

WARNING

ELECTRIC SHOCK

Opening the Signal Booster could result in electric shock and may cause severe injury.

DAMAGE TO EQUIPMENT

Operating the Signal Booster with antennas in very close proximity facing each other could lead to a severe damage to the Signal Booster.

Use of unauthorized antennas, cables, and/or coupling devices not conforming with ERP/EIRP and/or indoor-only restrictions is prohibited.

Home/ personal use are prohibited.

CAUTION

THE SIGNAL BOOSTER SHOULD BE INSTALLED AS CLOSE AS POSSIBLE TO THE POWER SOURCE.

THIS REPEATER IS FOR INDOOR USE ONLY AND SHOULD BE INSTALLED INSIDE OF THE VEHICLE.

WARNING. This is **NOT** a **CONSUMER** device. It is designed for installation by **FCC LICENSEES** and **QUALIFIED INSTALLERS.** You **MUST** have an **FCC LICENSE** or the express consent of an FCC Licensee to operate this device. Unauthorized use may result in significant forfeiture penalties, including penalties in excess of $100,000 for each continuing violation.	**WARNING: This is NOT a CONSUMER** device. It is designed for installation by an installer approved by an **ISED** licensee. You **MUST** have an **ISED LICENCE** or the express consent of an ISED licensee to operate this device.

FCC Warning Statements

FCC Part 15.105 statement

This equipment has been tested and found to comply with the limits for a Class A digital device, pursuant to part 15 of the FCC Rules. These limits are designed to provide reasonable protection against harmful interference when the equipment is operated in a commercial environment. This equipment generates, uses, and can radiate radio frequency energy and, if not installed and used in accordance with the instruction manual, may cause harmful interference to radio communications. Operation of this equipment in a residential area is likely to cause harmful interference in which case the user will be required to correct the interference at his own expense.

FCC Part 15.21 statement

Any changes or modifications not expressly approved by the party responsible for compliance could void the user's authority to operate this equipment.

RF Exposure Statement

The antenna(s) must be installed such that a minimum separation distance of at least 20 cm is maintained between the radiator (antenna) and all persons at all times. This device must not be co-located or operating in conjunction with any other antenna or transmitter.

IC Warning Statements

RSS-GEN, Sec. 7.1.2 – (transmitters)

Under Industry Canada regulations, this radio transmitter may only operate using an antenna of a type and maximum (or lesser) gain approved for the transmitter by Industry Canada. To reduce potential radio interference to other users, the antenna type and its gain should be so chosen that the equivalent isotropically radiated power (e.i.r.p.) is not more than that necessary for successful communication.

Conformément à la réglementation d'Industrie Canada, le présent émetteur radio peut fonctionneravec une antenne d'un type et d'un gain maximal (ou inférieur) approuvé pour l'émetteur par Industrie Canada.
Dans le but de réduire les risques de brouillage radioélectrique à l'intention desautres utilisateurs, il faut choisir le type d'antenne et son gain de sorte que la puissance isotroperayonnée quivalente (p.i.r.e.) ne dépassepas l'intensité nécessaire à l'établissement d'une communication satisfaisante.

RSS-GEN, Sec. 7.1.2 – (detachable antennas)

This radio transmitter (identify the device by certification number, or model number if Category II)has been approved by Industry Canada to operate with the antenna types listed below with the maximum permissible gain and required antenna impedance for each antenna type indicated. Antenna types not included in this list, having a gain greater than the maximum gain indicated for that type, are strictly prohibited for use with this device.

Le présent émetteur radio (identifier le dispositif par son numéro de certification ou son numéro de modèle s'il fait partie du matériel de catégorie I) a été approuvé par Industrie Canada pour fonctionner avec les types d'antenne énumérés ci-dessous et ayant un gain admissible maximal et l'impédance requise pour chaque type d'antenne.
Les types d'antenne non inclus dans cette liste,ou dont le gain est supérieur au gain maximal indiqué, sont strictement interdits pour l'exploitation de l'émetteur.

RF Radiation Exposure

This equipment complies with RF radiation exposure limits set forth for an uncontrolled environment. This equipment should be installed and operated with a minimum distance of 20 cm between the radiator and your body.
This transmitter must not be co-located or operating in conjunction with any other antenna or transmitter.
RF exposure will be addressed at time of installation and the use of higher gain antennas require larger separation distances.

RSS-102 RF Exposure

L'antenne (ou les antennes) doit être installée de façon à maintenir à tout instant une distance minimum de au moins 20 cm entre la source de radiation (l'antenne) et toute personne physique. Cet appareil ne doit pas être installé ou utilisé en conjonction avec une autre antenne ou émetteur.

Antenna installation

Antennas must be installed in accordance with FCC requirement. The height of the antenna above average terrain (HAAT) must not exceed limit in the following table.
Antennas must be installed in accordance with FCC 27.50 and 24, and SRSP 503, SRSP 510, SRSP 513 and SRSP 517.
With 11 dBi gain antennas the height of the antenna above average terrain (HAAT) must not exceed 12717.59 m.

WARRANTY

Opening or tampering with the Signal Booster will void all warranties.
American Booster provides a 3-year warranty for B-10K with all of its equipment.
Every product of American Booster is guaranteed to be free of material defects or component malfunctions.

This warranty does not cover to any Signal Boosters that have been exposed to any misuse, abuse, physical damage or inadequate maintenance.
Products returned by customers must be in their original, unmodified condition, shipped in the original packaging with proof of purchase documentation enclosed, and a Return Merchandise Authorization (RMA) number printed on the outside of the shipping box.
To repair or replace damaged Signal Boosters we may include refurbished American Booster's products.

AMERICAN BOOSTER®

130 E Covey Run, Union, WA 98592
Technical Support : 913 469 6699
www.americanbst.com

Memo

Memo

AMERICAN BOOSTER®

www.americanbst.com

Technical Support : 913 469 6699