AMERICAN BOOSTER®

VOLTEX 50 RV PLUS
User Manual

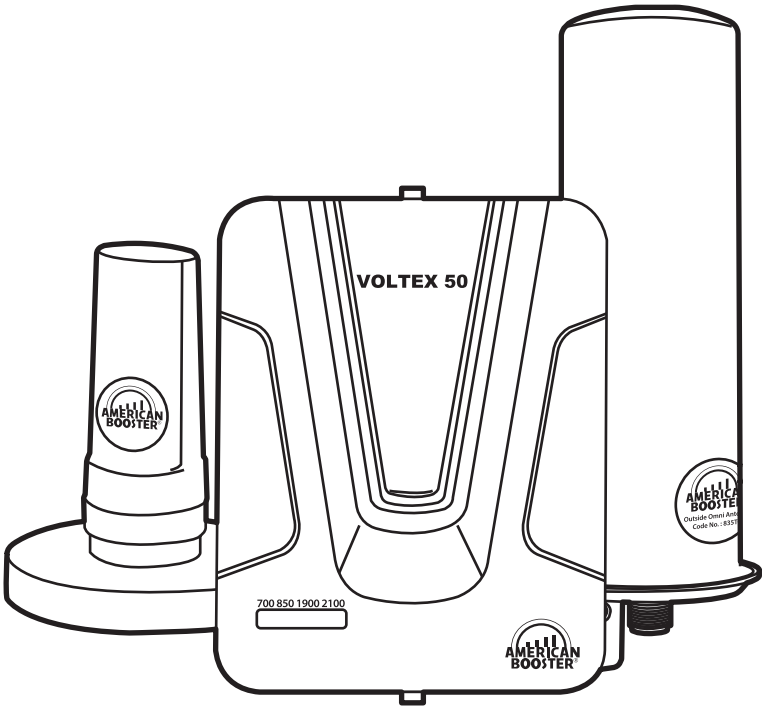

RV Cellular Signal Booster

This publication provides instructions for installing **Signal Booster VOLTEX 50 RV PLUS.**

Copyright© 2018, American Booster Inc.
All Rights Reserved.

Revision History

Date	Version	Changes
2018, October	Version 1.0	Original
2018, December	Version 1.1	Original

Certification

This equipment complies with the FCC directives.

INDEX

Product Introduction ---------- 4

Package Contents ---------- 5

Installation Guide ---------- 6

Step 1. Mount Outside Antenna ---------- 6

Step 2. Connect Cable to Outside Antenna ---------- 7

Step 3. Booster Installation ---------- 8

Step 4. Connect Inside Antenna to the Booster ---------- 9

Step 5. Power up the Booster ---------- 10

Booster Performance ---------- 11

LED Indicators ---------- 12

Troubleshooting ---------- 13

Antenna Kit Option ---------- 14

Specifications ---------- 15

Safety Guidelines ---------- 16

FCC Warning Statements ---------- 17

IC Warning Statements ---------- 18

Warranty ---------- 19

VOLTEX 50 RV PLUS

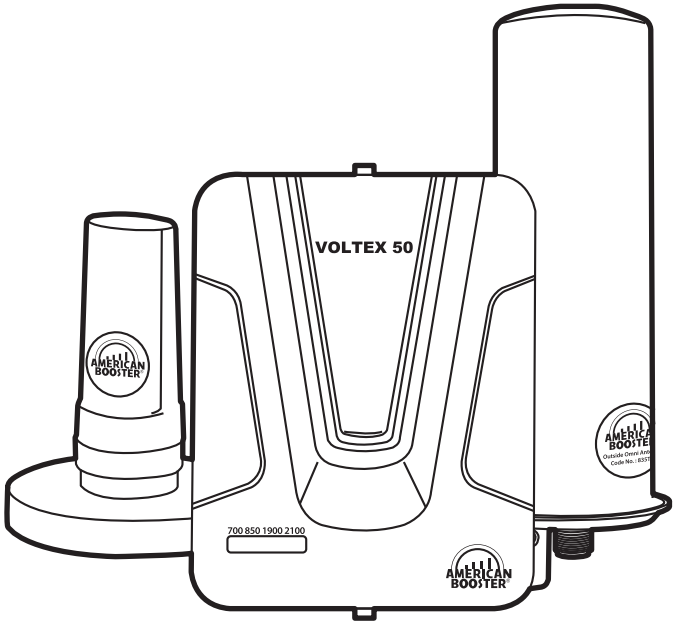

The American Booster® VOLTEX 50 RV PLUS has been designed to provide an advanced solution for boosting your signal and fastening your data speeds anytime, anywhere.

How it works

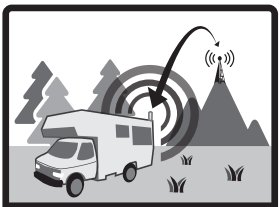

Receives Signal

The signal booster's outside antenna receives voice and data signals from a nearby cell tower.

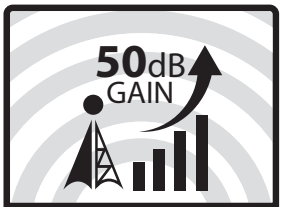

Boosts Signal

The signal booster receives the signal from the outside antenna and after amplifying the voice and data signals, sends them to the indoor antenna.

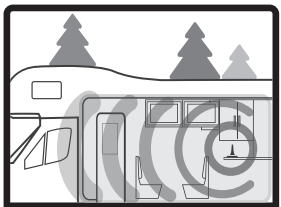

Improves Signal

The indoor antenna distributes the boosted signals throughout your vehicle.

Package Contents

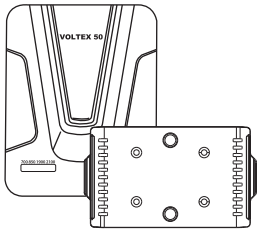

Signal Booster VOLTEX 50
Code No. : 835T7

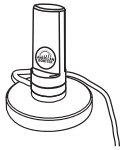

Inside Antenna Kit
Code No. : 835TF

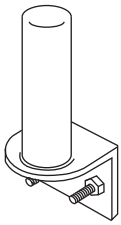

Outside Antenna Kit
Code No. : 835TG

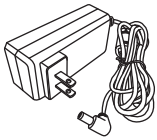

AC/DC Adapter
Code No. : 835U3

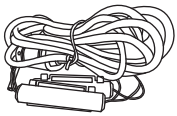

Hardwire Power Cable
Code No. : 836HW

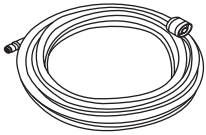

Coaxial Cable 20ft.
Code No. : 8368J

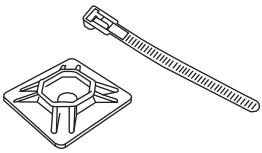

Cable Mounts
& Ties (×15ea)

Cable Entry Cover

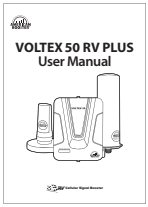

User Manual

Step 1. Mount Outside Antenna

Choose where you want to have the outside antenna on your RV and make sure the antenna is in a location within the reach of the booster with a 20 ft. coaxial cable.
We would recommend mounting the outside antenna on the pole or ladder of your RV.

1

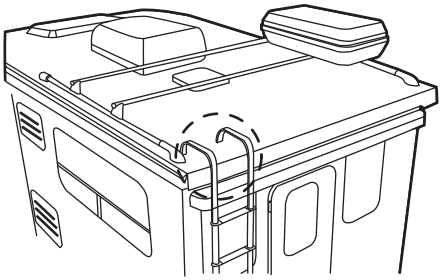

2

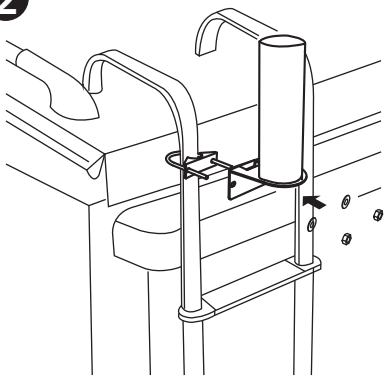

3

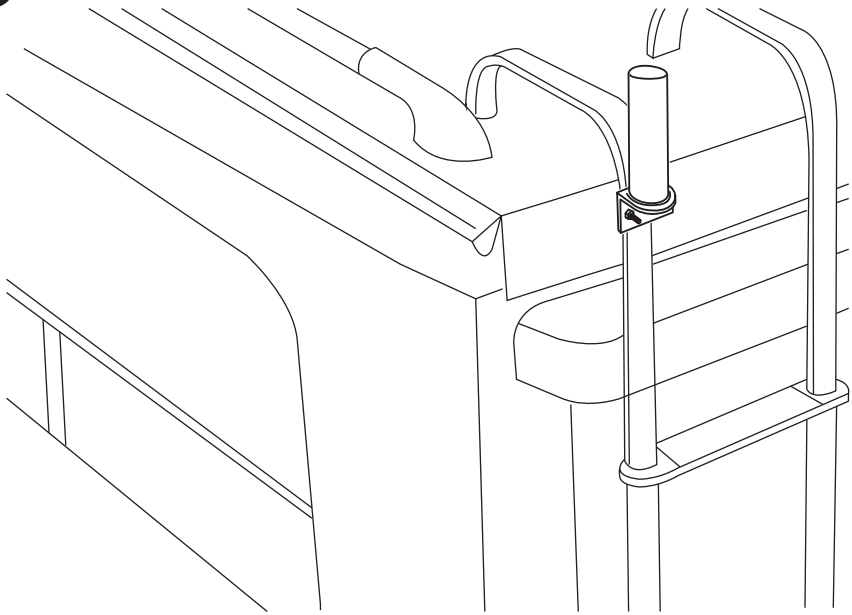

Step 2. Connect Cable to Outside Antenna

Assuming you don't have any holes, drill a 1 inch hole on your RV for the coaxial cable to pass through the RV and connect the outside antenna to the booster.

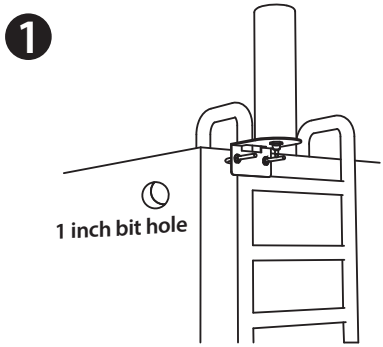

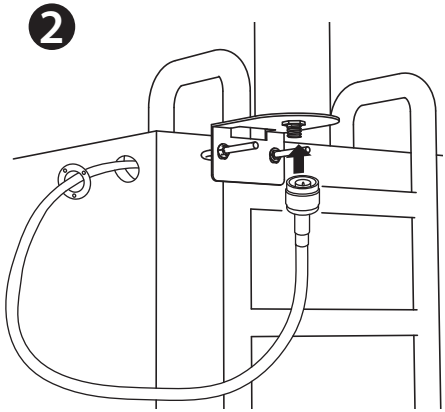

WARNING
Check if there are no wires, pipes or cables that can be damaged during the drilling a hole.

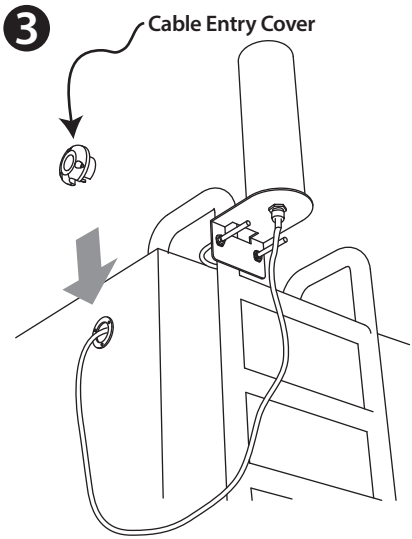

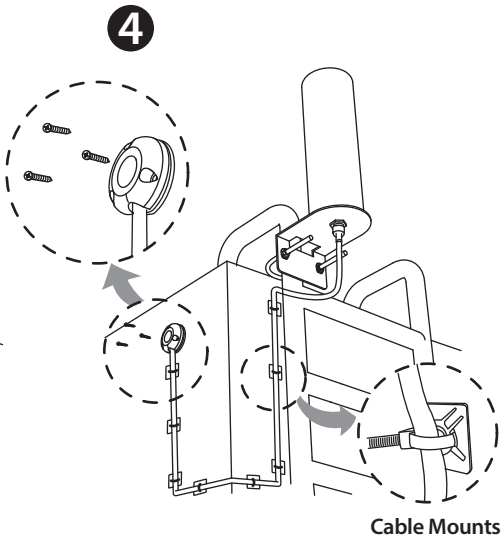

Step 3. Booster Installation

1

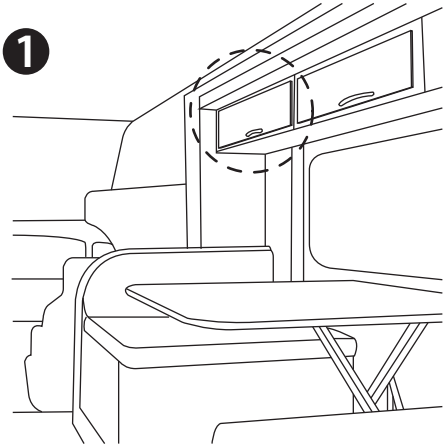

Find a place to install the booster.

2

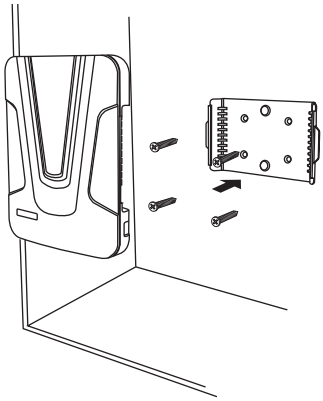

Mount the bracket.
Snap the booster into the bracket.

3

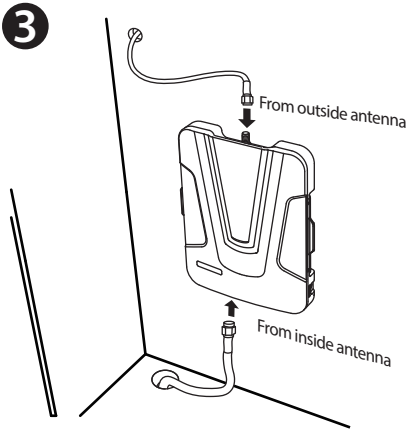

Connect the cables.

Step 4. Connect Inside Antenna to the Booster

Place the inside antenna close to your phone or tablet for an optimal performance.

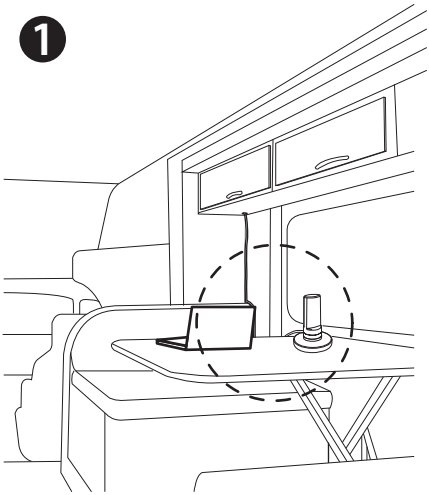

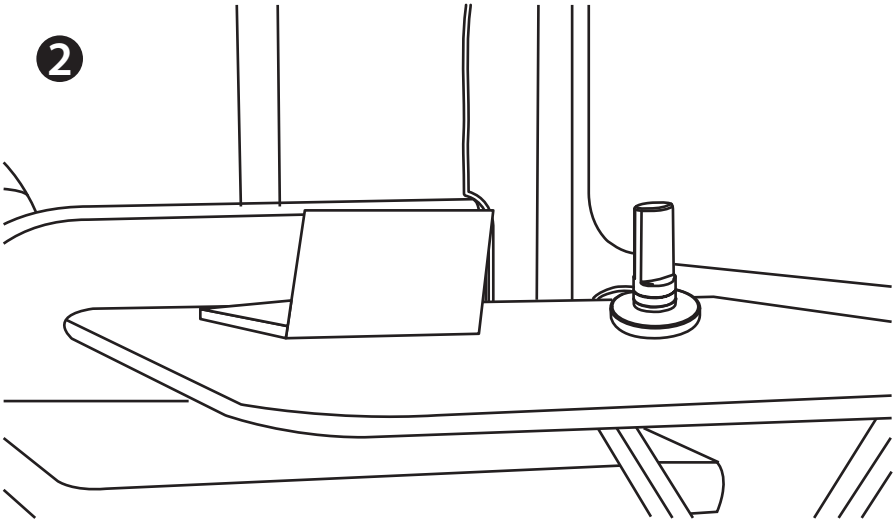

Step 5. Power up the Booster

Connect the AC/DC power adapter to the booster and plug into a power source.
The power LED will light, indicating that the signal booster is ready for use.

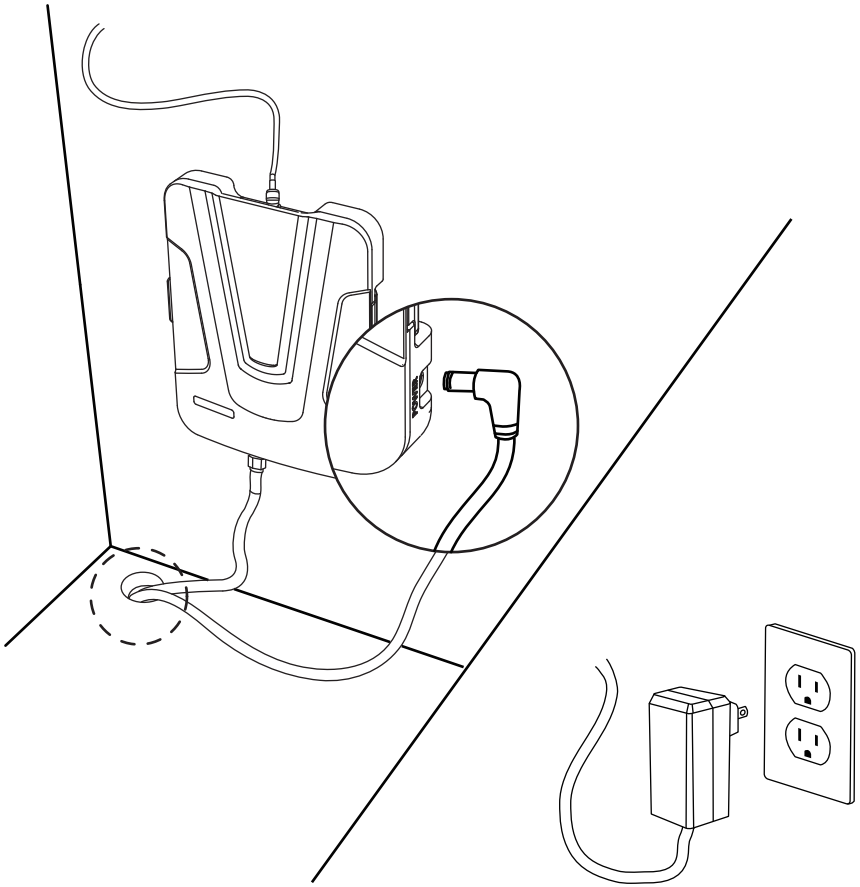

Note **We provide hardwire DC power cable option as well.**

Booster Performance

The Booster's performance depends on the signal strength you are receiving through outside antenna.

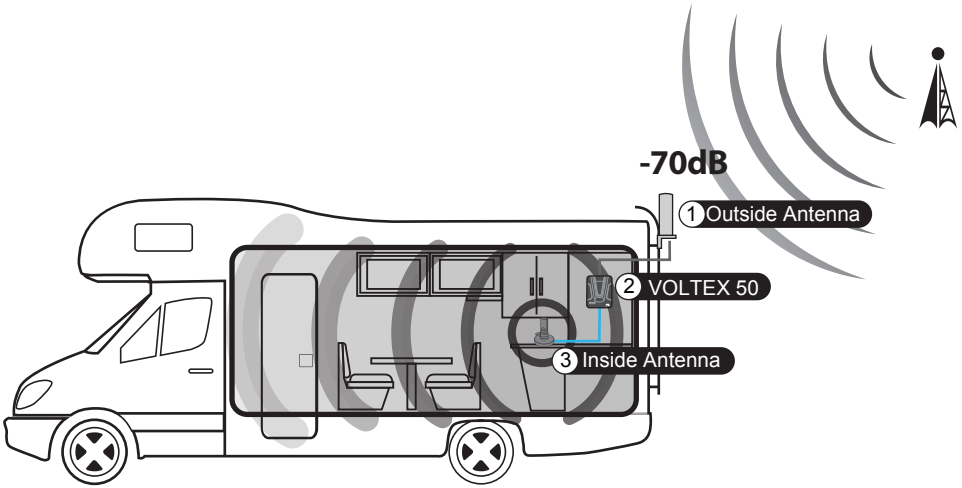

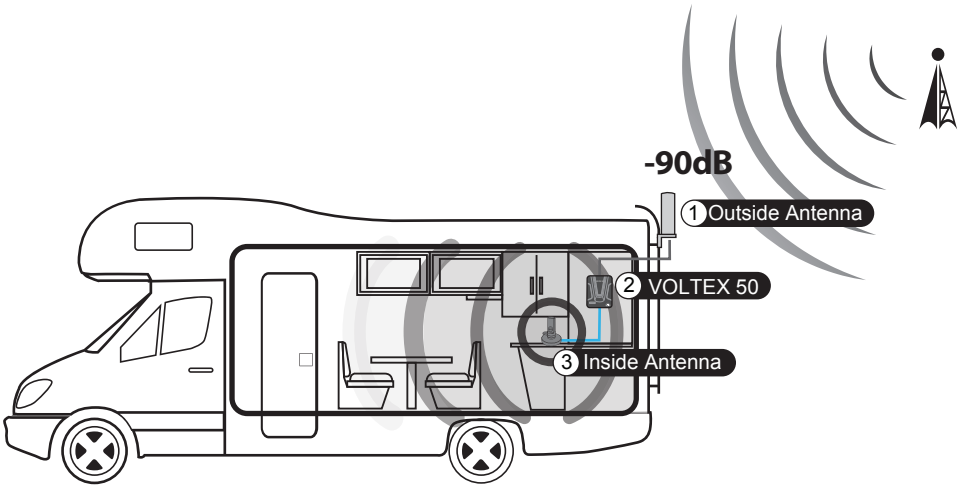

LED Indicators

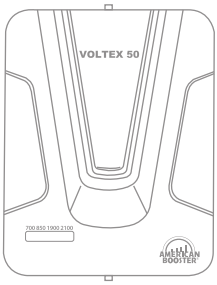

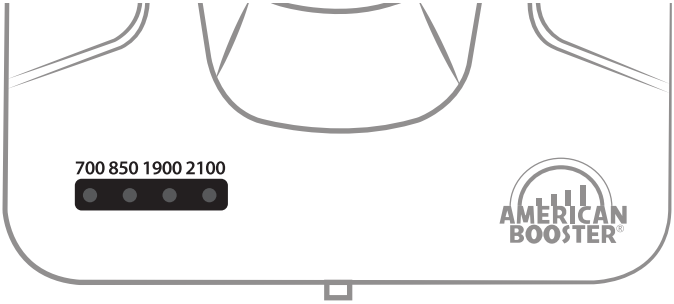

Flashing Green

After the Signal Booster is powered on, flashing green will last for 20 seconds.
It means that the Signal Booster is being set up for an optimal performance.
The Signal Booster will need a few minutes to adapt to the network environment and start boosting the signal at the highest power.
The Signal Booster provides real-time self-diagnosis, so in case of flashing or solid red, refer to the Troubleshooting instructions below.

Solid Green

This indicates that the Signal Booster has been installed and works properly.

Solid Orange

It means that the input signal from the nearby cell tower is between -25dBm and -30dBm, so you are recommended to change RV position for receiving weaker signal.

Flashing & Solid Red

This indicates that the input signal from the nearby cell tower is too strong.
After flashing red for 10 seconds the solid red will appear.
Signal Booster will stop amplifying signals of the frequency with a solid red indicator automatically to prevent the Booster from any damage.
If the rest of LEDs are green and you have a strong signal and fast data speeds on your cell phone or tablet, then troubleshooting is not needed.

Instructions to fix flashing or solid red.

If you have a good voice signal and fast data speeds even though one or two of LEDs are solid red, you may continue to use the Signal Booster as it is.

But if one of LEDs has flashing or solid red, your voice signal is weak and data speeds are low, then troubleshooting of the Booster is necessary.

1. Unplug the Signal Booster's power adapter.
2. Check if the Outside Antenna and Inside Antenna are located far enough from each other.
3. Plug the Signal Booster into a power source.
4. Check the LED on the Signal Booster. If flashing or solid red appears, repeat steps 1 through 3 and relocate Inside and Outside Antennas.
5. If you have any difficulties with installation or troubleshooting the Signal Booster, please contact our technical support team for assistance (913-469-6699).

Light Off

1. If there is no light on the Signal Booster, verify if it is connected to a power source correctly. Try to unplug and plug back the power adapter.
2. Check if there is any damage in the power cable.
3. Check if there is any damage in the Signal Booster's connector.

Antenna Kit Option

Inside Antenna Option

Desktop Antenna with 17ft. RG58_SMA (Male) cable_835TF

Patch Antenna with 10ft. RG174_SMA (Male) cable_835LH

Panel Antenna with N Connector_83616(Use RG174 35ft. 50Ω N(Male) to SMA(Male) Coaxial Cable_837NM)

Dome Antenna with N Connector_83617(Use RG174 35ft. 50Ω N(Male) to SMA(Male) Coaxial Cable_837NM)

Outside Antenna Option

Magnetic Antenna with 13ft. RG174_SMA (Male) cable_835LL

Omni Antenna with N Connector_835TG (Use 5D-FB 20ft. 50Ω N (Male) to SMA (Male) Coaxial Cable_ 8368J)

Marine Antenna with 13ft. RG58_SMA (Male) cable_836C9

Truck Antenna with 13ft. RG58_SMA (Male) cable_837C4

Specifications

Parameter	Downlink	Uplink	Remark
700MHz LTE	734MHz ~ 757MHz	704MHz ~ 716MHz	Band 17 & 13
		776MHz ~ 787MHz	Band 17
800MHz Cellular	869MHz ~ 894MHz	824MHz ~ 849MHz	Band 5
1900MHz PCS	1930MHz ~ 1995MHz	1850MHz ~ 1915MHz	Band 25
2100MHz AWS	2110MHz ~ 2155MHz	1710MHz ~ 1755MHz	Band 4
Composite Power	5dBm	23dBm	
Maximum Gain	50dB		
Noise Figure	5dB nominal		
Impedance	50 Ohm		
RF Connector	SMA Female		
Power Connector	DC-045B		
Power	DC 12V / 3A		
Size, inch	5.12 × 6.5 × 1.0		W × H × D
Weight, lbs	1.21		
Operation Temperature	23 ~ +122°F (-5 ~ +50°C)		
Humidity	0 ~ 80%		

- For a detected oscillation, the device output will turn off within 300 ms for the Uplink and 1 second for the Downlink and remained off for 1 minute.
  And, the device will have a maximum of 5 attempts at restart from oscillation before permanently shutting off. Noise power, gain, and linearity are maintained by the device's microprocessor.

⚠ Safety Guidelines

WARNING

ELECTRIC SHOCK

Opening the Signal Booster could result in electric shock and may cause severe injury.

DAMAGE TO EQUIPMENT

Use only the power supply provided in this package.
Operating the Signal Booster with antennas in very close proximity facing each other could lead to a severe damage to the Signal Booster.

CAUTION

THE SIGNAL BOOSTER SHOULD BE INSTALLED AS CLOSE AS POSSIBLE TO THE POWER SOURCE.
THIS REPEATER IS FOR INDOOR USE ONLY AND SHOULD BE INSTALLED INSIDE OF THE VEHICLE.

FCC ID : U88-VOLTEX50 **IC : 8137A- VOLTEX50** **MODEL : VOLTEX50**

This is a CONSUMER device

This device complies with Part 15 of the FCC Rules. Operation is subject to the following two conditions: (1) this device may not cause harmful interference, and (2) this device must accept any interference received, including interference that may cause undesired operation.

BEFORE USE, you **MUST REGISTER THIS DEVICE** with your wireless provider and have your provider's consent. Most wireless providers consent to the use of signal boosters. Some providers may not consent to the use of this device on their network. If you are unsure, contact your provider. In Canada, **BEFORE USE** you must meet all requirements set out in ISED CPC-2-1-05. You **MUST** operate this device with approved antennas and cables as specified by the manufacturer. Antennas **MUST** be installed at least 20 cm (8 inches) from (i.e.. **MUST NOT** be installed within 20 cm of) any person.You **MUST** cease operating this device immediately if requested by the FCC (or ISDE in Canada) or a licensed wireless service provider.
WARNING. E911 location information may not be provided or may be inaccurate for calls served by using this device.

For more information on registering your signal booster with your wireless provider, please see below

https://www.sprint.com/en/legal/signal-boosters.html?id16=signal%20booster
https://support.t-mobile.com/docs/DOC-9827
https://www.verizonwireless.com/solutions-and-services/accessories/register-signal-booster/
https://securec45.securewebsession.com/attsignalbooster.com/
https://www.uscellular.com/uscellular/support/fcc-booster-registration.jsp

⚠ FCC Warning Statements

FCC Part 15.105 statement Class B

This equipment has been tested and found to comply with the limits for a Class B digital device, pursuant to part 15 of the FCC Rules. These limits are designed to provide reasonable protection against harmful interference in a residential installation. This equipment generates, uses and can radiate radio frequency energy and, if not installed and used in accordance with the instructions, may cause harmful interference to radio communications. However, there is no guarantee that interference will not occur in a particular installation. If this equipment does cause harmful interference to radio or television reception, which can be determined by turning the equipment off and on, the user is encouraged to try to correct the interference by one or more of the following measures:

- Reorient or relocate the receiving antenna.
- Increase the separation between the equipment and receiver.
- Connect the equipment into an outlet on a circuit different from that to which the receiver is connected.
- Consult the dealer or an experienced radio/TV technician for help.

FCC Part 15.21 statement

Any changes or modifications not expressly approved by the party responsible for compliance could void the user's authority to operate this equipment.

RF Exposure Statement

The antenna(s) must be installed such that a minimum separation distance of at least 20cm is maintained between the radiator (antenna) and all persons at all times. This device must not be co-located or operating in conjunction with any other antenna or transmitter.

Use of unauthorized antennas, cables, and/or coupling devices not conforming with ERP/EIRP and/or indoor-only restrictions is prohibited.

⚠ IC Warning Statements

RSS-GEN, Sec. 7.1.2 – (transmitters)

Under Industry Canada regulations, this radio transmitter may only operate using an antenna of a type and maximum (or lesser) gain approved for the transmitter by Industry Canada. To reduce potential radio interference to other users, the antenna type and its gain should be so chosen that the equivalent isotropically radiated power (e.i.r.p.) is not more than that necessary for successful communication.

Conformément à la réglementation d'Industrie Canada, le présent émetteur radio peut fonctionneravec une antenne d'un type et d'un gain maximal (ou inférieur) approuvé pour l'émetteur par Industrie Canada.
Dans le but de réduire les risques de brouillage radioélectrique à l'intention desautres utilisateurs, il faut choisir le type d'antenne et son gain de sorte que la puissance isotroperayonnée quivalente (p.i.r.e.) ne dépassepas l'intensité nécessaire à l'établissement d'une communication satisfaisante.

RSS-GEN, Sec. 7.1.2 – (detachable antennas)

This radio transmitter (identify the device by certification number, or model number if Category II)has been approved by Industry Canada to operate with the antenna types listed below with the maximum permissible gain and required antenna impedance for each antenna type indicated. Antenna types not included in this list, having a gain greater than the maximum gain indicated for that type, are strictly prohibited for use with this device.

Le présent émetteur radio (identifier le dispositif par son numéro de certification ou son numéro de modèle s'il fait partie du matériel de catégorie I) a été approuvé par Industrie Canada pour fonctionner avec les types d'antenne énumérés ci-dessous et ayant un gain admissible maximal et l'impédance requise pour chaque type d'antenne. Les types d'antenne non inclus dans cette liste,ou dont le gain est supérieur au gain maximal indiqué, sont strictement interdits pour l'exploitation de l'émetteur.

RF Radiation Exposure

This equipment complies with RF radiation exposure limits set forth for an uncontrolled environment. This equipment should be installed and operated with a minimum distance of 20cm between the radiator and your body. This transmitter must not be co-located or operating in conjunction with any other antenna or transmitter. RF exposure will be addressed at time of installation and the use of higher gain antennas require larger separation distances.

RSS-102 RF Exposure

L'antenne (ou les antennes) doit être installée de façon à maintenir à tout instant une distance minimum de au moins 20cm entre la source de radiation (l'antenne) et toute personne physique. Cet appareil ne doit pas être installé ou utilisé en conjonction avec une autre antenne ou émetteur.

WARRANTY

Opening or tampering with the Signal Booster will void all warranties.
American Booster provides a 2-year warranty with all of its equipment.
Every product of American Booster is guaranteed to be free of material defects or component malfunctions.

This warranty does not cover to any Signal Boosters that have been exposed to any misuse, abuse, physical damage or inadequate maintenance.
Products returned by customers must be in their original, unmodified condition, shipped in the original packaging with proof of purchase documentation enclosed, and a Return Merchandise Authorization (RMA) number printed on the outside of the shipping box.
To repair or replace damaged Signal Boosters we may include refurbished American Booster's products.

AMERICAN BOOSTER®

130 E Covey Run, Union, WA 98592
Technical Support : 913 469 6699
www.americanbst.com

AMERICAN BOOSTER®

www.americanbst.com

Technical Support : 913 469 6699