Honeywell

# Installation and Operating Instructions

## TRS-3300, TRS-3330, TRS-3350
## Item no. 029802.UL, 029803.UL, 029804.UL


| | | | | |
|---|---|---|---|---|
| P40140-49-UL0-01<br>18.09.2006 | US | **Software-Version 1.xx** | Subject to change without notice |

The information contained in this document is subject to change without notice.
Understandably, we cannot assume any guarantee for the correctness of documentation. Faults cannot be avoided completely despite proceeding carefully.
We are always grateful for comments and suggested modifications.

The contents of this manual is subject to change without notice. The manufactorer cannot be held liable for any technical defects or misprints contained in this manual. Besides this, the manufactorer cannot be held liable for any damage, which is directly or indirectly due to delivery, performance and utilization of this material.

This manual contains information which is protected by ownership rights and subject to copyright. All rights are protected. This manual may be copied neither in its entirety nor in part, nor reproduced in any other way without the previous consent of Honeywell International Inc.

# Table of Contents


1. Terminal equipments . . . . . 4

2. General Information . . . . . 5
   2.1 Entry types . . . . . 5
   2.2 Reading procedure . . . . . 5
   2.3 Operating notes . . . . . 5
   2.4 Connection possibillities . . . . . 6
      2.4.1 Overview . . . . . 6
      2.4.2 Configuration examples . . . . . 6

3. Mounting / Installation . . . . . 10
   3.1 Initial mounting . . . . . 10
   3.2 Dismounting . . . . . 14

4. Operation and Indication elements . . . . . 15

5. System-Setup . . . . . 16
   5.1 Initial Installation . . . . . 16
      5.1.1 Start System-Setup . . . . . 17
      5.1.2 Individual settings of System-Setup . . . . . 19
   5.2 Modify System-Setup . . . . . 31
   5.3 Adjust brightness / contrast . . . . . 32

6. Operation . . . . . 33
   6.1 Indications . . . . . 33
      6.1.1 Basic condition . . . . . 33
      6.1.2 Online . . . . . 34
      6.1.3 Offline . . . . . 34
   6.2 Entry types at the terminal . . . . . 35
      6.2.1 Clock in / Clock out entries . . . . . 35
         6.2.1.1 Clock in entry . . . . . 35
         6.2.1.2 Clock out entry . . . . . 38
      6.2.2 Business errand entry . . . . . 41
         6.2.2.1 Simple business errand entry (without reason) . . . . . 41
         6.2.2.2 Business errand entry with reason 1 . . . . . 42
         6.2.2.3 Business errand entry with reason 2 . . . . . 42
         6.2.2.4 End of business errand . . . . . 42
      6.2.3 Neutral entries . . . . . 43
      6.2.4 Querying the stored information fields . . . . . 43
      6.2.5 Querying the data base occupancy . . . . . 44
      6.2.6 Time total inquiry via switch over table . . . . . 45

7. Error messages . . . . . 46

8. Component diagram and terminal assignment . . . . . 48

9. FCC Statements . . . . . 55
   9.1 Statement required by 15.19 and RSS-210 . . . . . 55
   9.2 Statement required by 15.21 . . . . . 55
   9.3 Statement required by 15.105 . . . . . 55

10. Correct use . . . . . 56

11. Technical data . . . . . 57

# 1. Terminal equipment

| | |
|---|---|
| - TRS 3300 Time Recording Terminal 12V without integrated reader | Item no.: 029802.UL |
| - TRS 3330 Time Recording Terminal 12V with proX2-reader | Item no.: 029803.UL |
| - TRS 3350 Time Recording Terminal 12V with mifare-reader | Item no.: 029804.UL |

**Scope of delivery:**
- Terminal
- 2 x side cover
- Sealing for wall mounting
- Accessory bag
- Documentation

In the following we will call the devices generally TRS 33xx, as they differ only by the integrated reader.

**Integrated interfaces:**

Several interfaces canbe selected in the terminal (transmission rate generally between 4.800 and 19.200 baud):

➜ Asynchronous RS 232 interface (max. distance = 15 m) for direct connection via COM-port / or for RDT (Remote Data Transmission) connection via modem.

➜ Asynchronous RS 485 module bus interface (3-wire / 5-wire connection, max. distance = 1.500m) for connection via interface converter or bus controller.

➜ Asynchronous RS 485 host interface (3-wire / 5-wire connection, max. distance = 1.500m) for connection to PC.

➜ Ethernet interface (10/100 MBit/s) for connection to Ethernet netzworks.

➜ Additionally there exists an RS 232 interface, e. g. for connecting a barcode reader (max. cable length = 3m).[1]

**Layout and assignment of the interfaces see chapter 8 = component diagram and terminal assignment.**

## Memory

The terminal has a dynamic memory which will be filled with the data defined in the superior time recording software. The actual amount of IDs possible at a maximum depends on the size of an ID data record. This size itself depend on the number and definition of the info fields (see chapter 6.2.4).

Max. amount of IDs **without info fields**: approx. 40.000
Max. amount of IDs **with info fields of maximum length**: approx. 4.500
Typical average value with 3-4 info fields (according to the examples in the following): approx. 19.000 IDs.

The size of the info fields depend on the used host application (time recording software). For this, we are not able to give any statements.

The entry memory can store up to 87.000 entries (only necessary in Offline mode, in Online mode each entry will be transmitted immediately to the time recording software).

If the entry memory should happen to be occupied in Offline mode, the terminal displays the message " Memory full" and further entries will not be stored. If the connection to the host computer (time recording software) is rebuilt (Online), all the stored entries will automatically be transmitted to the host computer.

[1] Function is not supported by the current firmware.

# 2. General Information

## 2.1 Entry types

- Standard entries for time recording: Entering (Clock in), Exiting (Clock out), business errand (Away on business out / Away on business in) as well as
- 200 individually definable Info entries[2] such as inquiries of personal accounts (time, absence or type of wage accounts).

The booking data are collected from the terminal by the time recording software and integrated into the data base. The complete booking process and the necessary calculations take place centrally.

In Online mode, the current values are calculated and displayed, the Offline mode displays the latest balance of the accounts stored in the terminal.
In RDT mode, only the last values stored in the terminal will be displayed. The executed entries are stored in the terminal as long as the superior time recording software calls the branch to receive the collected data. This procedure - as well as the loading of data - should be executed regularly, e. g. once during the night in order to get the most current entries in the time recording software and to have the branch terminal updated with the latest account balances.

## 2.2 Reading procedure

Proximity/contactless data carriers (cards, key fobs, chips) with the readeing procedures proX1, proX2 and mifare can be used as identification media and for recording person specific identy card data (identification card number).

**Note to transponders:**

When using several transponders of the same frequency range (125KHz and 13,56MHz), reading errors can occur with insufficient distance between the transponders. There is no safety risk, only the reading will be prevented if there are several transponders within the reading area.

## 2.3 Operating notes

**Caution!**
The device is not suited for use in the open air.
The TRS 33xx time recording terminal is to be used purely as an in-house device within an (access control) protected area (see also chapter 11 = technical data).

[2] These accounts must be defined in the superior time recording software.

## 2.4 Connection possibilities

### 2.4.1 Overview

The device can be connected via one of the integrated interfaces[3] :

| Conection | | Protocol | Configuration example |
|---|---|---|---|
| Ethernet | | Event (UDP) | RJ45, CAT 5 or higher, 1:1 via Hub/Switch, cross over for direct connection to a PC/Notebook |
| | | ISO (TCP/IP) | |
| RS 485 | 3-wire | Esser | Bus controller (internal / external) |
| | | ISO | free für OEM hardware |
| | 5-wire | Esser | Bus controller (internal / external) |
| | | ISO | Interface converter |
| RS 232 | | RDT | Modem |
| | | ISO | Direct connection to COMx |

### 2.4.2 Configuration examples

Example 1: Connection via Ethernet:

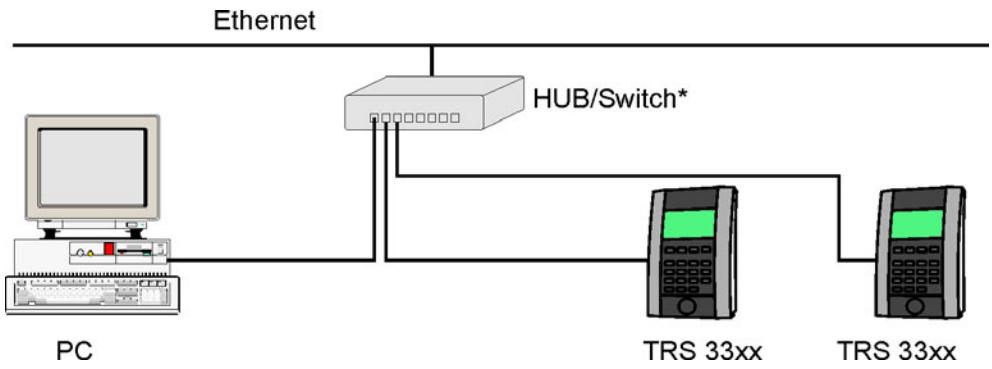


A **grounded** hub/switch is recommended.

[3] Combinations are not allowed/possible.

Example 2: Bus controller (external/internal) RS 485 3-wire technique, 1 or 2 lines.

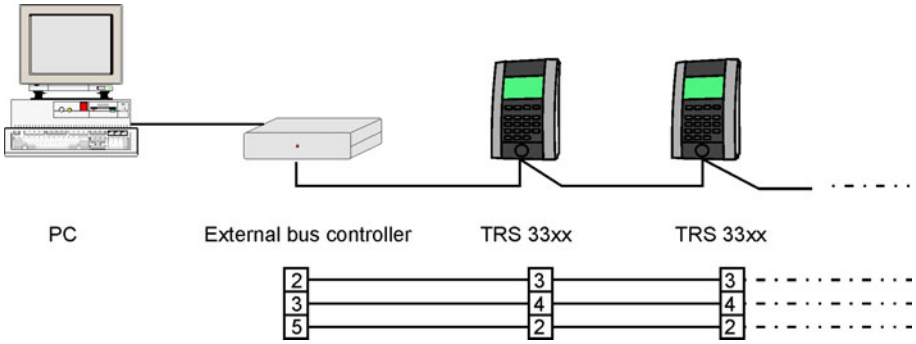


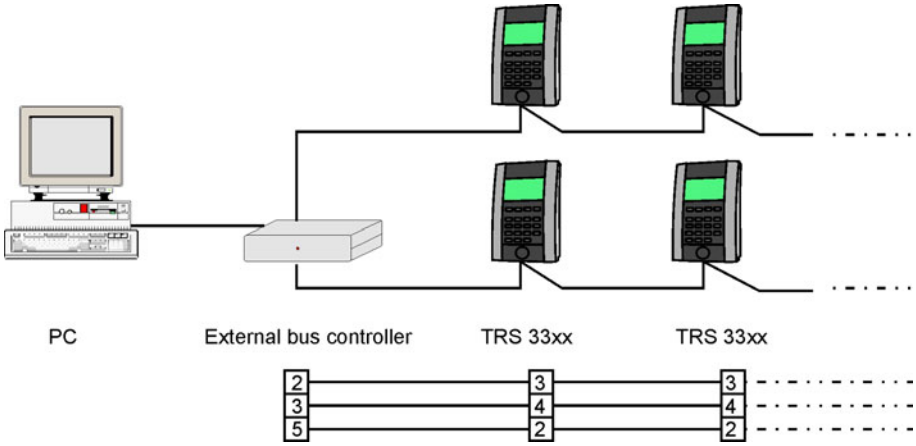


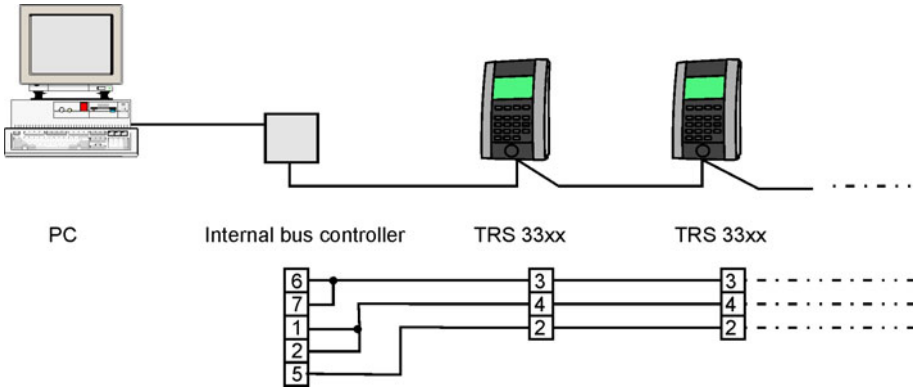


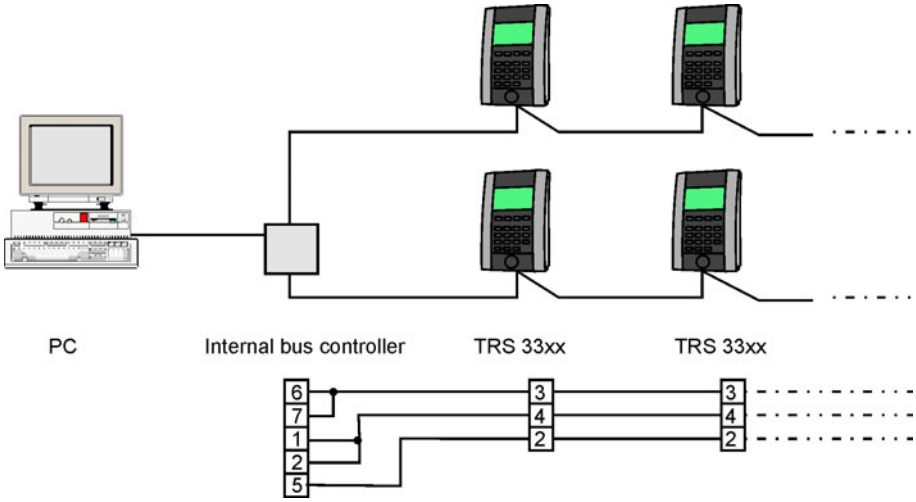

Example 3: Bus controller (external/internal) RS 485 5-wire technique, 1 or 2 lines:

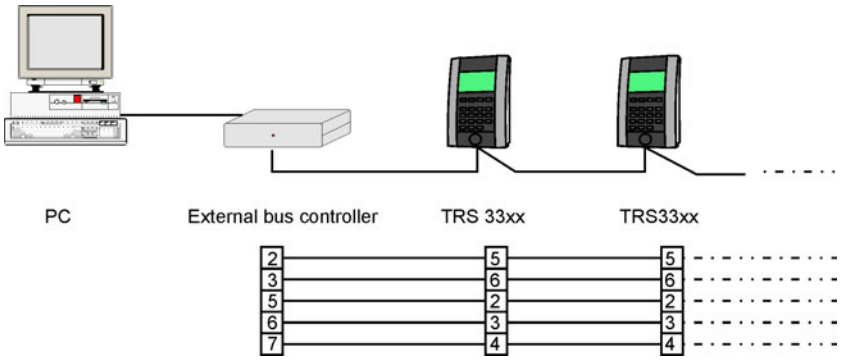


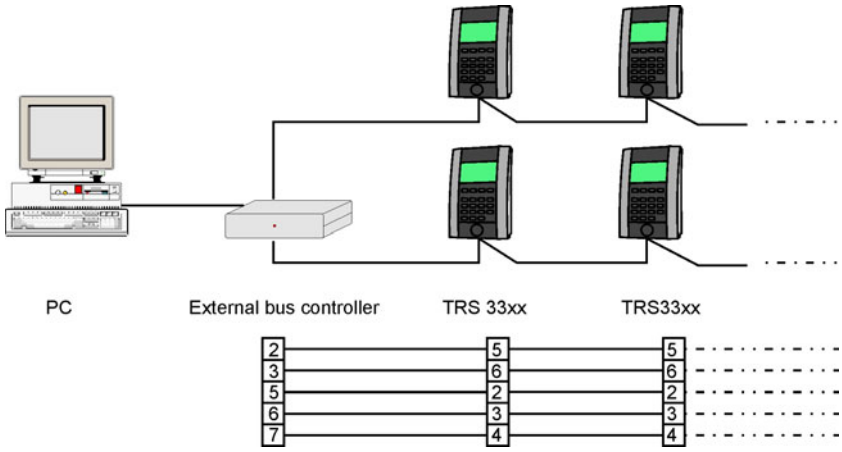


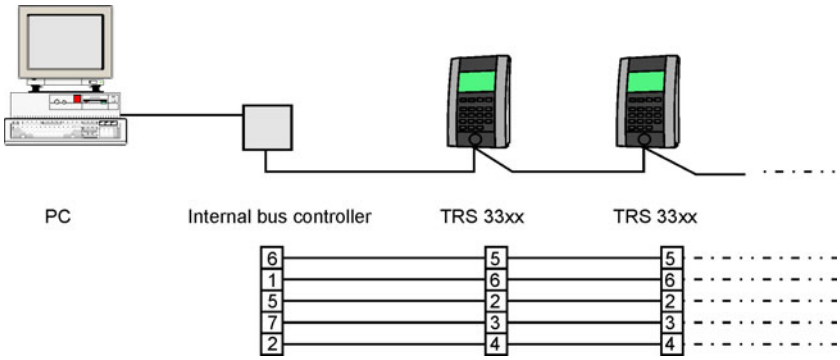


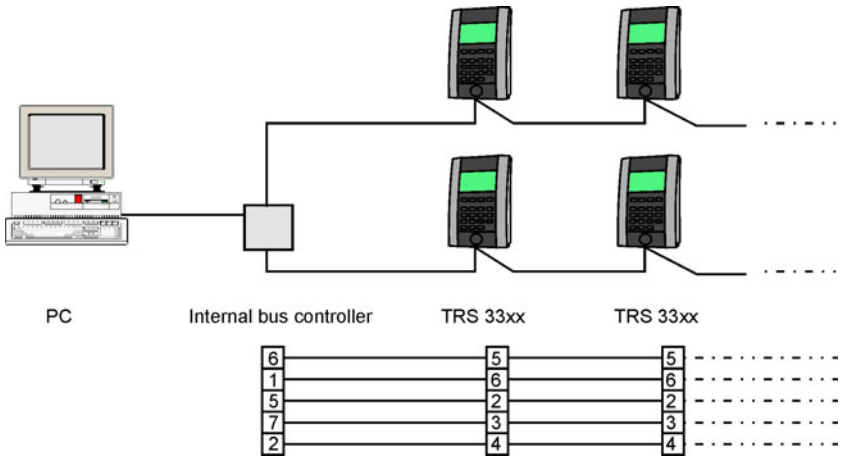

Example 4: Connection via interface converter RS 485 5-wire technique, 1 or 2 lines:

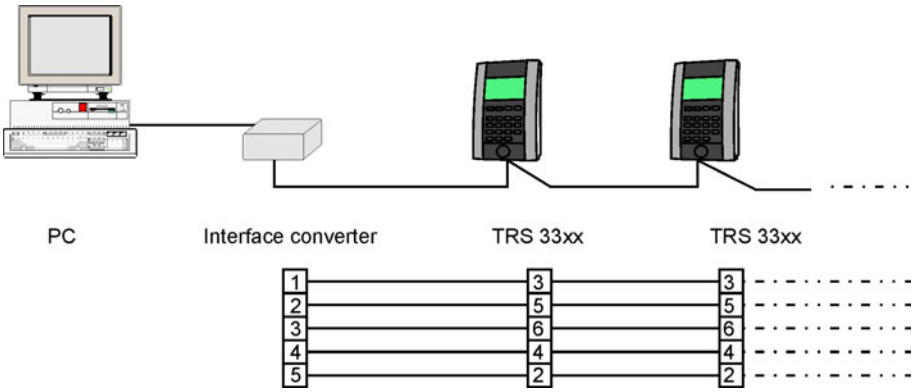


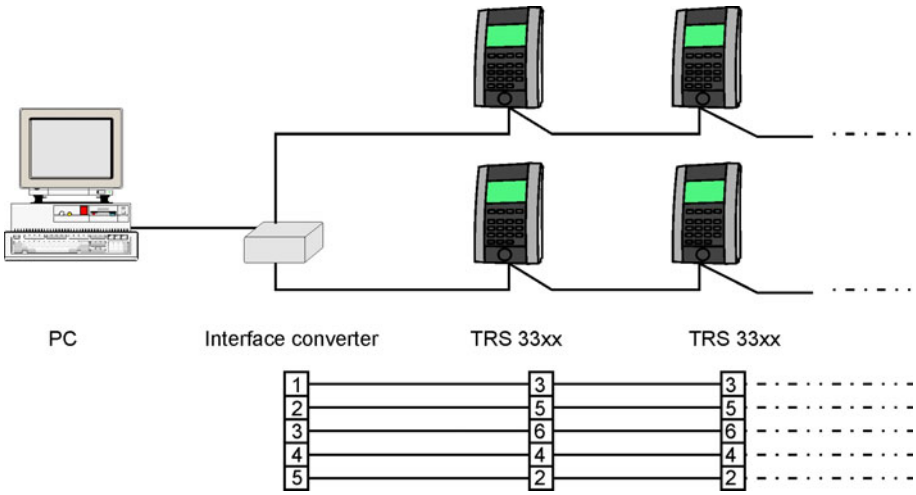


Example 5: Direct connection via RS 232 (COMx)

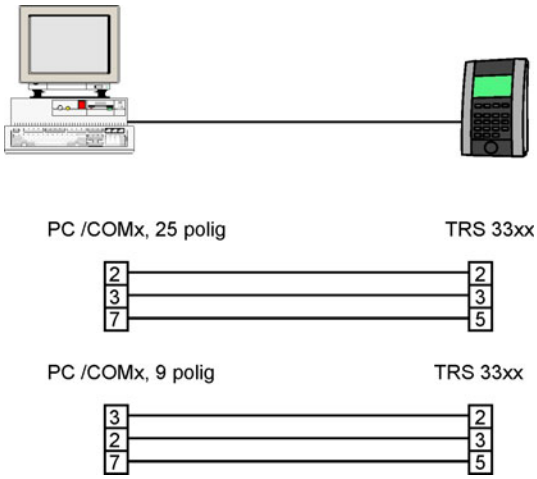


For modem connection use the connection cable belonging to the modem.

# 3. Mounting / Installation

**Caution!** **Disconnect the power supply before opening the device (switch off circuit breaker or fuse / remove the plug of the external power supply)!**

**Indication of use:** The TRS 33xx time recording terminal is purely meant for recording bookings. It is only suited for use with time recording software of the facturer or OEM partners.

The device is purely planned and constructed for use in a secured area within a bulding. The use in the open air does not correspond to the environment conditions based on by the manufactorer.

## 3.1 Initial Mounting

1. Stick the enclosed sealing (white foam material) into the fitting notch of the back of the device[4].

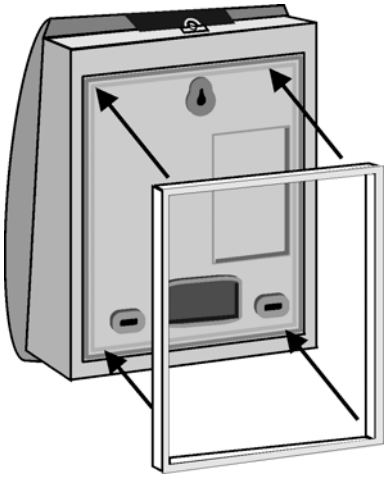

2. Remove screw cover and loosen the locking screw with the enclosed Allen wrench with center hole.

[4] Concerning IP-Class see also chapter 11 = Technical data.

**Protection against tamper:** The locking screw can not be opened with a common Allen wrench.

3. a) Swing the device open to the front.
   b) Feed the cables for power supply and host connection through the opening and connect them in accordance to chapter 2.4 and chapter 8 (the example shows an Ethernet connection).
   c) Mark the positions for drilling / screwing (depending on the wall quality). Use wall plugs if necessary and screw the device tight to the wall.

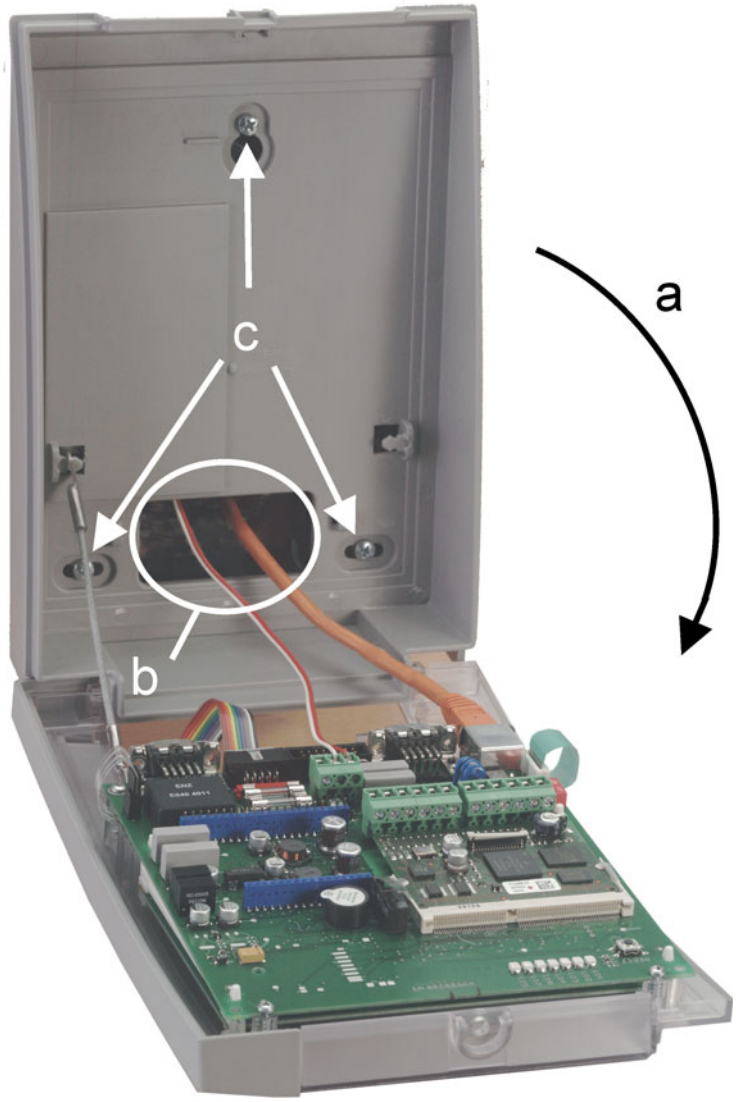

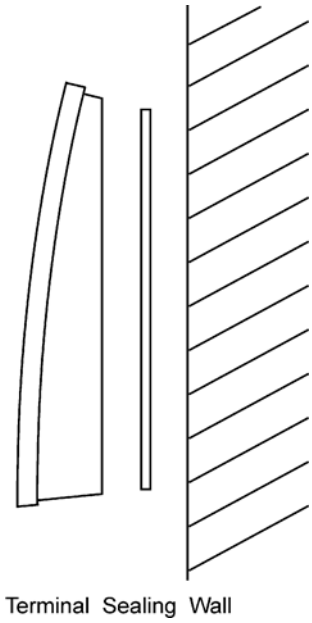


As an alternative the front (upper part) of the device can be removed completely for mounting.

d) For this, the cables must not at all be connected, or must be removed (see also step 3b).

e) Unmount the support cable

In ex-works condition the side covers are not assebled. If the terminal has already been completely assembled and in operation, the right side cover must be removed (see chapter 3.2).

f) Bend the upper part carefully to the right...

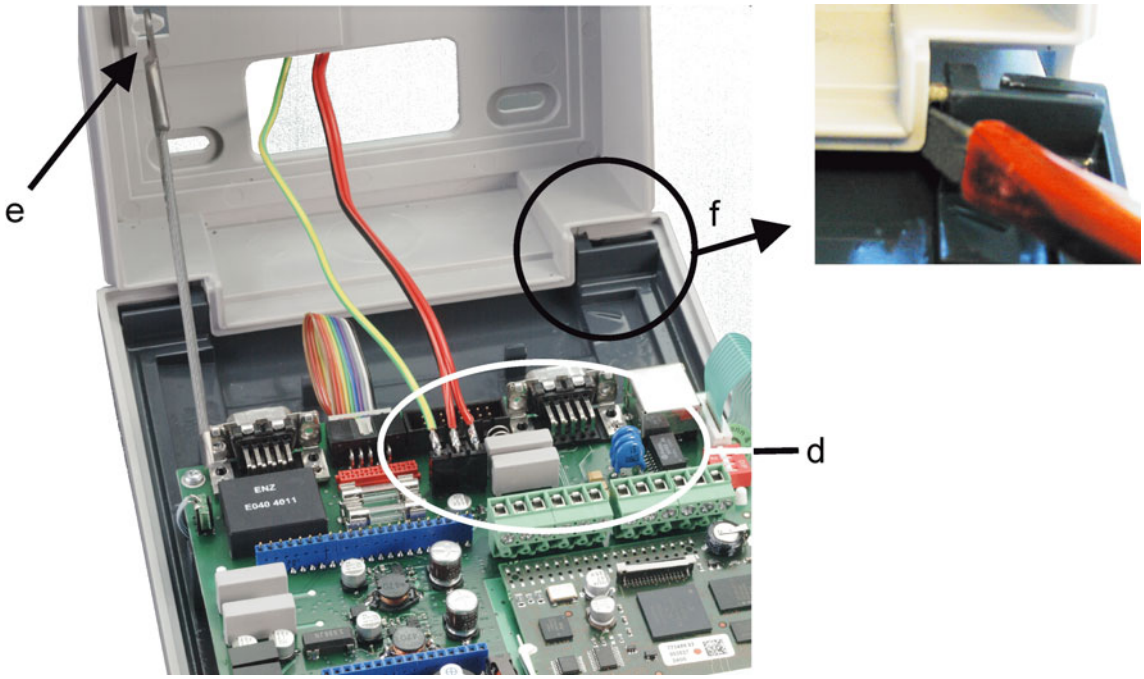

g / h) ...then it can be pulled off the locking pins.

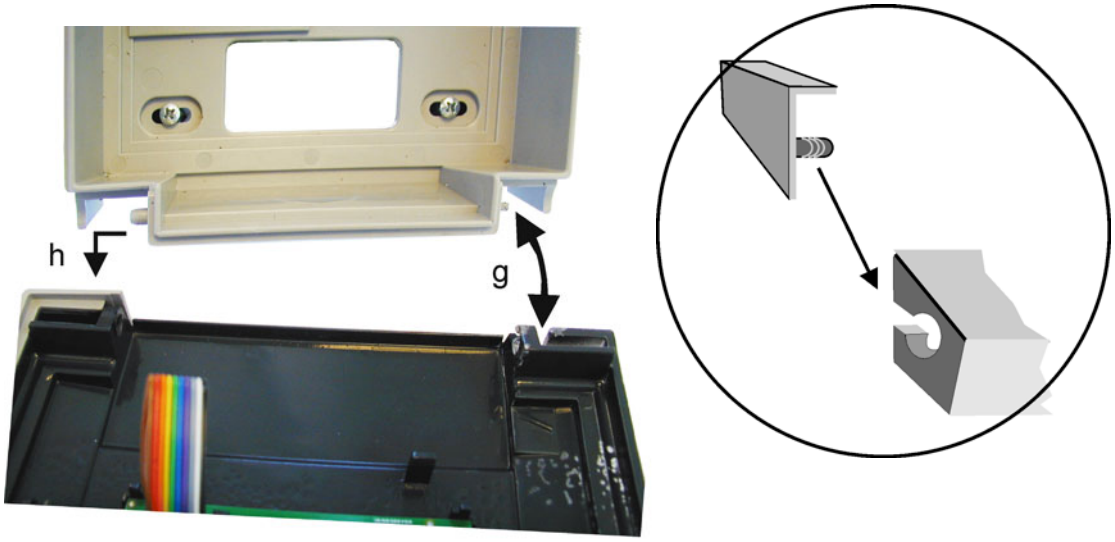


4. Connect / attach the connection cables for power supply and host according to chapter 2.4 and Kapitel 8.

5. Abschlusswiderstände setzen gemäß Kapitel 8.

6. Shut the device (Caution, do not squeeze or tear off any cable), tighten the locking screw and latch the screw cover.

7. Clip on and latch the side covers right and left.

## 3.2 Dismounting

Generally the dismounting of the terminal occurs in reverse order as described in chapter 3.1.

Before removing the upper part, the right side cover must be removed (recommended to use a screw driver)

1.

2.

3.

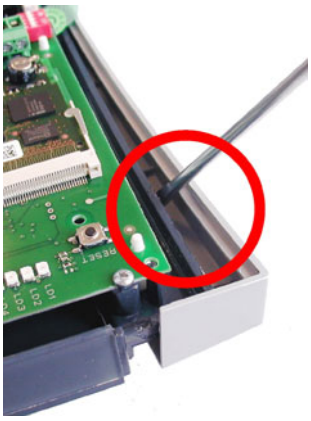

4.

5.

# 4. Operating and Indication Elements

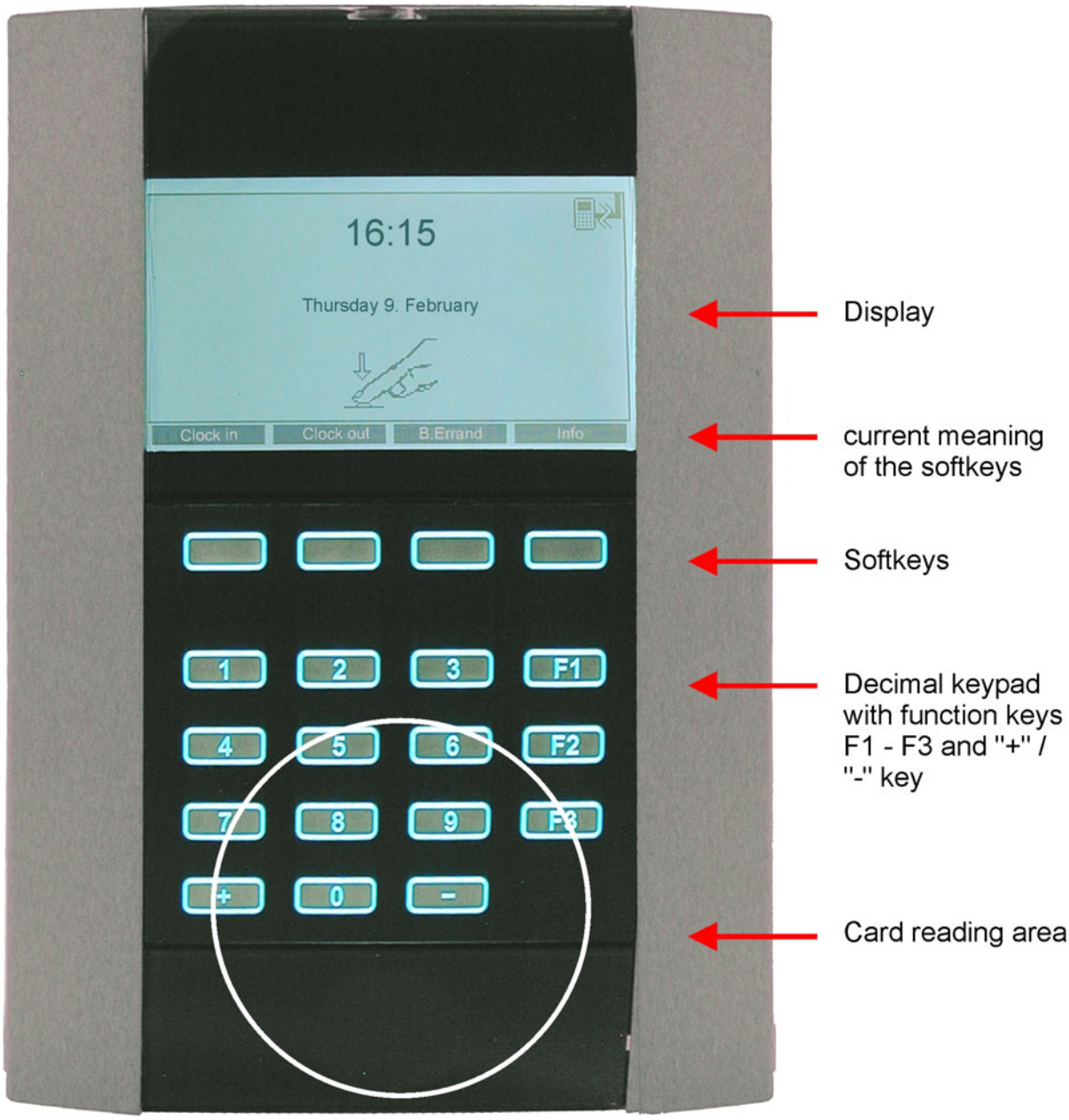

# 5. System-Setup

## 5.1 Initial Installation

The first time the terminal is turned on, the TRS 33xx begins with some system messages that run automatically until it calls for the user to set the parameters in the terminal by means of the time recording software.

All these system messages until the language selection box appear in English. This is a standard setting and will also be displayed in English while booting even if another language has been selected.

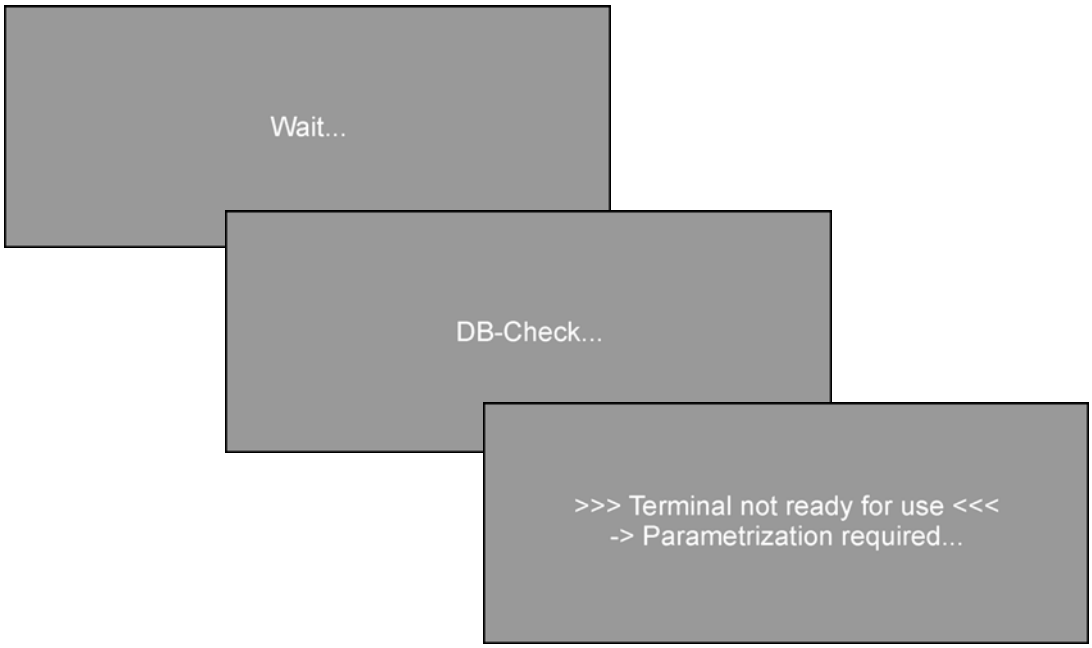


The terminal waits for a parameterization, which means loading the data entered in the time recording software, e. g. autghorized ID cards, switch over table etc. Data loading will be done via one of the interfaces integrated in the terminal (RS 485-, RS 232- or Ethernet interface).

Before Parameterization by the time recording software the system settings (System-Setup) of the terminal must be done.

### 5.1.1 Start System-Setup

As long as the settings in the System-Setup have not been carried out, the device is not able to communicate with the time recording software. Due to this reason the Offline symbol (a) is displayed.

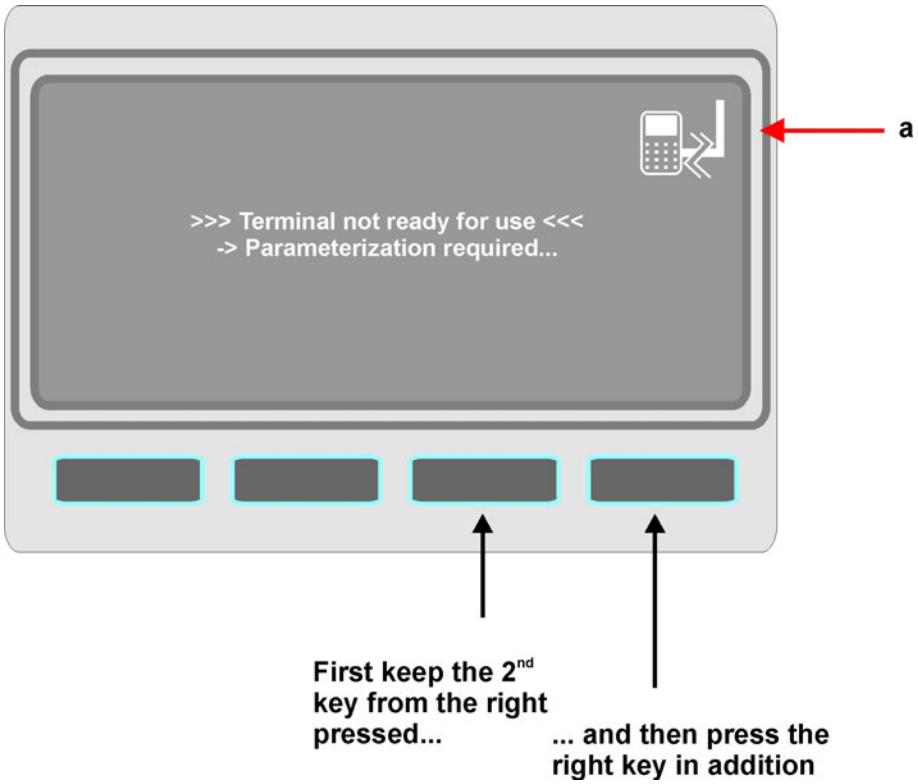


The request to enter the system code is prompted:

The system code is to be entered via the numeric keys of the decimal keypad. It is hidden displayed by "*" (in the example above already four of eight numbers are entered). Confirm your entry with the <**ENTER**> softkey, or use <**ESC**> to abort. Confirming a wrong entry with <**ENTER**> causes a termination (initial state see above). The entries must be repeated.

**The system code for the TRS 33xx is: 3 4 2 4 3 1 3 1**

If a wrong entry of the system code is made, you either can wait for the expiration of the timeout or terminate with <**ESC**>. The display shows again the initial state (see previous page). The required entries are to be repeated.

After correct system code entry the terminal software data are displayed:

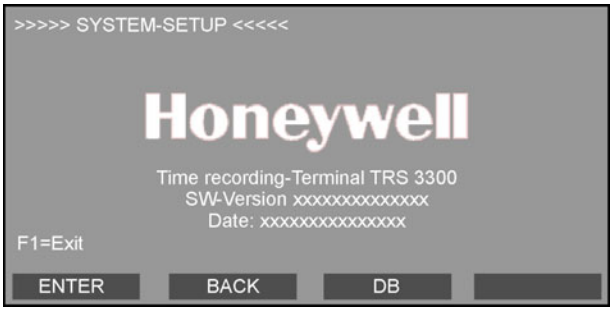


| | | | |
|---|---|---|---|
| Meaning of the softkeys: | **ENTER** | = | Page down within the System-Setup. |
| | **BACK** | = | Page up within the System-Setup. |
| | **DB** | = | Display of database occupancy (which is still empty at this time, see also chapter 5.2 and chapter 6.2.5). |

Additionally, the System-Setup can be exited at any time via the function key **F1**. Subsequently, the system settings should at least be checked for completeness and correctness and be corrected/completed if neccesary, as the modifications will be saved by exiting via **F1**.

| | | | |
|---|---|---|---|
| Recommended procedure: | **ENTER** | = | Page down (corresponds to the examples of next chapter). |

The four softkeys have been newly assigned for the input of the system data itself:

Additionally, a termination is always possible with **F1**, as long as it is indicated on the display.

All entries made in the current display must be confirmed with the <**ENTER**>-key. If there is a selection of more than one item, always the value which was last highlighted will be saved.

If incorrect data has been confirmed with the **<ENTER>** key by mistake, you can go back with the <BACK> key to repeat the last entry or entries. A few system parameters are interconnected in such a way that correcting the last parameter could eventually result in the TRS 33xx not returnining to the last, wrong parameter, but to the first parameter that forms a logical unit with the wrong parameter.

The two <↑> and <↓> keys are used for selecting from the parameter settings available and serve for scrolling up or down on the display. The scroll bar allows itself to be moved from the initial position in the upper margin of the display "upwards" to the last entry of the parameter list as well as downwards to the next entry of the list (continuos scrolling).

### 5.1.2 Individual settings of System-Setup

The examples following use a simplified display presentation in order to accentuate the essential information.

**1. Language** possible values: German / **English**

In this parameter, the language is defined that is used in the following. The displays during booting remain English, independent of the selected language.

```
>>>>> SYSTEM-SETUP <<<<<        English
                                 German
Language:
```

With parametrizing via the time recording software, the terminal will be set to the language defined in the time recording software.

**2. Special options** possible values: **No = Standard** / Yes = Set parameter

```
>>>>> SYSTEM-SETUP <<<<<        No (Standard)
                                 Yes  Set
Special options:
```

In this parameter, special options deviating from the standard programming can be set using “Yes = set”. They are described in the following paragraphs.
The default setting **No** skips the options of this submenu and goes directly to the menu **System data -> Type of communication**.

If the terminal should not work as required, the individual settings of the special options are to be checked and if neccesary set to **default**.

**3. Display last entry type (for entry/exit) parameter:**

possible values: **No** = default / Yes = set parameter

```
>>>>> SYSTEM-SETUP <<<<<        No (Standard)
                                 Yes  Set
Display last entry
type (for Clk. In/Out.)
```

Default: The terminal can automatically change to a perdefined entry type. This can be defined in a table of the time recording software.

Y = set: Deviating from standard the display shows its basic condition till the first valid entry has been done.

For example, if the first entry is an “Clock in” entry, the entry type “Clock in” will be displayed as long as another entry type is done, e. g. “Clock out” and so on.

**4. Suppress AOB-In function parameter**

possible values: **No** = default / Yes = set parameter

```
>>>>> SYSTEM-SETUP <<<<<

Suppress AOB-In?
-> Use Clock in
```

**No (Standard)**
Yes Set

To separate a normal Clock in/Clock out entry from a business absence, a person away on business uses the entry type “AOB-out” (AOB = Away on business). See also chapter 6 = Operations.

Default: At the return from a business trip “AOB-in” must be entered.

Yes = set: A normal “Clock in” entry will do at the return of a business trip. The system automatically recognizes the end of an absence on business due to the previous “AOB-out” entry.

**5. Communication type parameter:** possible values: ESSER* / **ISO** / RDT / Event protocol

*Change of trademark, corresponds to the previous effeff-protocol

```
>>>>> SYSTEM-SETUP <<<<<

Communikation type:
```

ESSER-Prot.
**ISO-Prot.**
RDT-Prot.
Event-Prot.

Selection of the required/requested protocol in dependance of the connection (see chapter 2.4). Depending on the selected protocol there are further entries to be made (see overview next page).

### a) Overview of the parameters required per protocol type

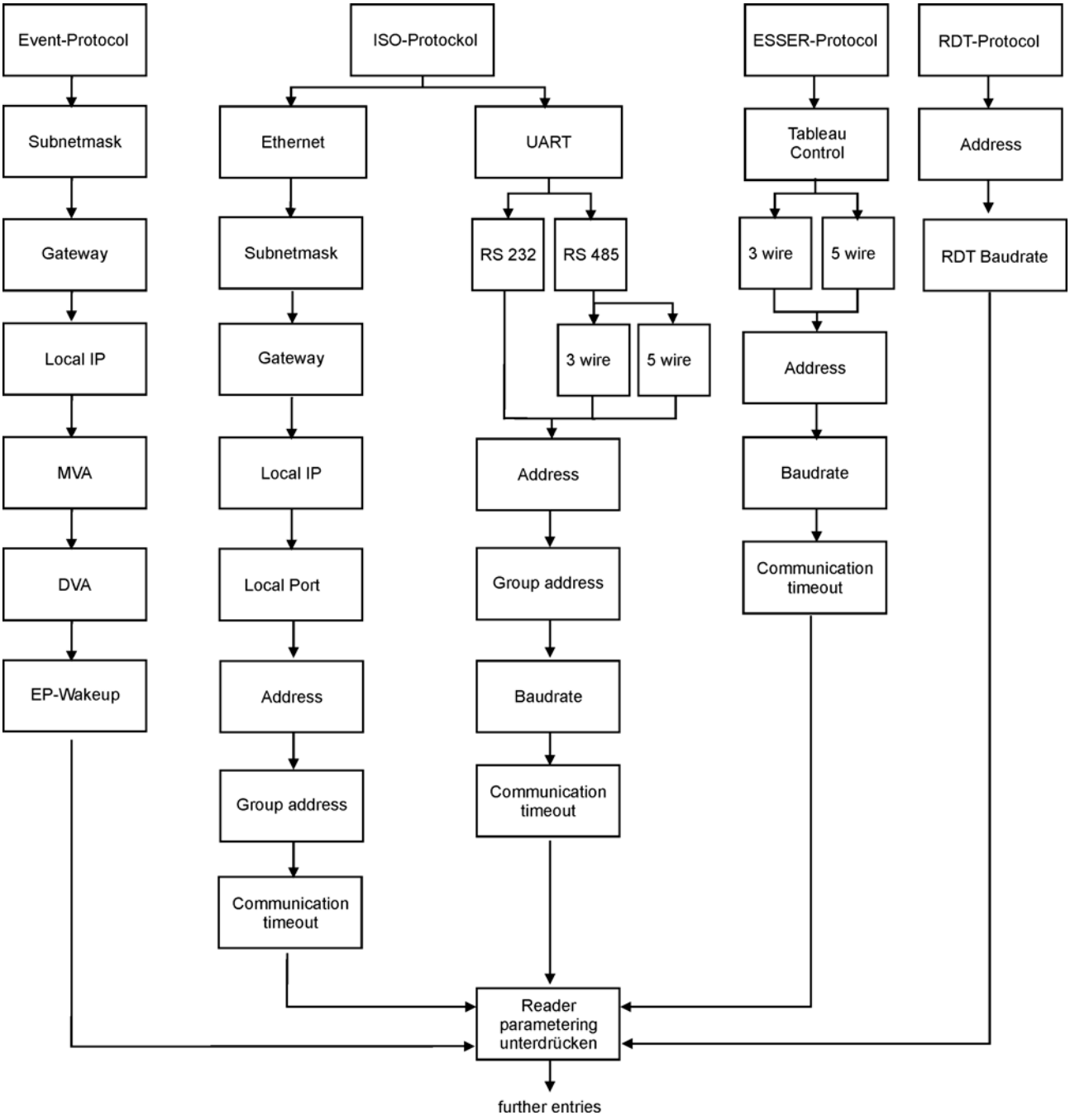

**b) Meaning of the individual parameter (in alphabetical order)**

**3-wire / 5-wire:** Selection of the wiring according to chapter 2.4.

**Address / Terminal address:** possible values: Addresse - 32

| >>>>> SYSTEM-SETUP <<<<< | **Address 1** |
|---|---|
| | Address 2 |
| Terminal address: | Address 3 |
| <33 not valid !> | Address 4 |

The <Terminal address> must have a value between 1 und 32 and may only exist once per bus controller (uniqueness!). To prevent malfunctions of the bus system by duplicate addresses during the terminal installation, the factory setting of the address is the invalid value 33.

**Baud rate:** possible values: 2.400 - **19.200 Baud**

| >>>>> SYSTEM-SETUP <<<<< | 2400 Baud |
|---|---|
| | 4800 Baud |
| Baudrate: | 9600 Baud |
| | **19200 Baud** |

The <Baud rate> parameter determines the speed of the data transmission with which the bus on the TRS 33xx is operated. If the <Communication type> is set to "RDT protocol", this parameter is called <RDT Baud rate>, which, however, also specifies the speed of the data transmission (here, the value adheres to the transmission speed of the modem). The default value is 19,200 Baud.

**Communication Timeout:** possible values: 500 - 3.000 msec

| >>>>> SYSTEM-SETUP <<<<< | 1500 ms |
|---|---|
| | 2000 ms |
| Communication Timeout: | 2500 ms |
| | **3000 ms** |

If there is no valid communication within the this time, Offline will be displayed. The factory setting (= maximum value) is 3.000 msec. It is recommended to keep/set this maximum value in order to have enough time to transmit data bofore displaying <Offline>, even when the network is highly frequented and/or there is a high quantity of data.

**DVA/MVA:** **General:** DVA: Destination virtual address
MVA: My virtual address

Using the Event protocol, the terminal communicates *event controlled* with the host. That means, the terminal sends an entry directly to the host at the moment it has been done at the terminal. In opposite to the conventional network communication, where normally the server checks by continuous polling if the individual terminals have any data to receive, the network will be charged only when an event occurs. By

this, the general network performance will be less derogated.
Each terminal needs its own virtual address (MVA) for identification. The current value is displayed. It can be changed via the decimal keypad to one of the allowed values if necessary.
A virtual destination address (DVA) can be allocated to each terminal (that is the participant, the terminal transmitts its data to).

Each address may only occur once in the whole network!

Example:

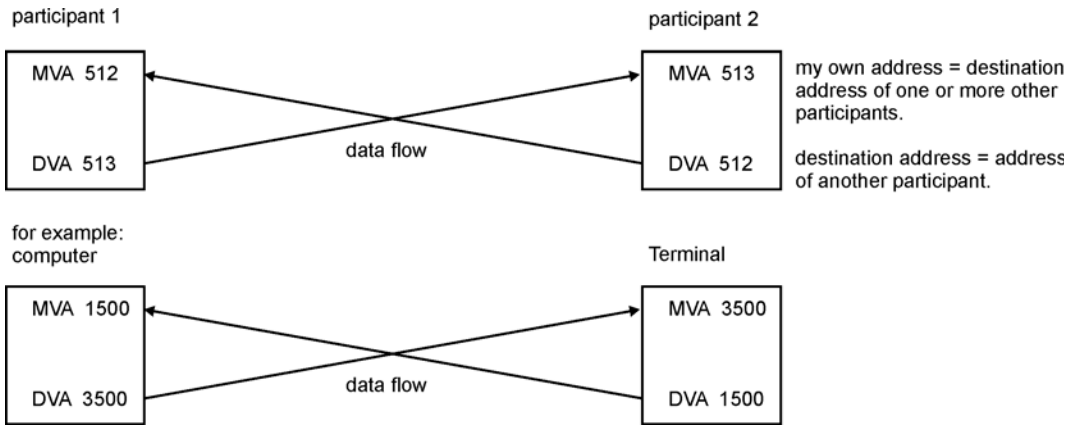


**EP-Wakeup:** ON / OFF

Normally this field should be set to ON. The device can recognise whether it is ONLINE or OFFLINE, even in resting phases (no bookings).
Set to OFF, the ONLINE/OFFLINE connection will only be checked when data are to be sent. Because of costs, OFF is only recommended with dailing network connections.

**Ethernet:** With the ISO protocol, the physical connection types **Ethernet** (RJ 45) and **UART** (RS 232, RS 485) can be used.

**Gateway:** The Gateway IP-address is used, if the interface has to set up also a connection to devices in other networks via a Gateway. All data blocks addressed to a device allocated to this other network will be sent to the defined Gateway, which forwards them to the other network.

**Group address:**

By using the group address, the address range limited to 32 addresses can be extended by factor 30.

**Local IP:** The local (own) IP-address of the device must be entered **fixed** (even with DHCP-servers a fix IP-address is necessary). The individual IP-address is to be requested at the network administrator.

The IP-address is the address, under which the connected device can be uniquely identified and addressed in the network via the Ethernet interface card. It has to be choosen carefully, because an IP-address allocated twice can cause network errors.

The IP-address consists of 4 parts: IP-address (xxx).(xxx).(xxx).(xxx)

**Local Port:** Port number of the IP-address of the device. The factory setting is 10001. If the time recording software requires a different port number, it must be entered here. In any case, it must agree with the settings of the time recording software (contact the network administrator).

**MVA** (see DVA/MVA)

**RDT-Baud rate** (see baud rate)

**RS 232:** Connection according to chapter 2.4

**RS 485:** Connection according to chapter 2.4

**Subnetmask:** The Netmask gets more and more significance in separated networks. The Netmask is used to define which part of the IP-address is the networkaddress and which part od the IP-address is the Host address. In the standard these borders are clearly defined (8/24 Class A, 16/16 Class B, 24/8 Class C).

**Tableau Control:** possible values: Off / Tab. Offline / **Tab. Onl/Offl**

(Only with the "Communication type = ESSER protocol" parameter set!)

With this function, it is possible to control the attendance status shown on the personnel tableau via the TRS 33xx. This function is especially implemented for remote station operation to always be able to read here also the current attendance status of the personnel on the tableau.
The value "Off" deactivates this function. The use of "Tab. Offline" activates the tableau control only in offline operation, which is tipical for a remote station. In the "Tab. Onl/Offl" mode, the tableau control is active both in online as well as offline operation, whereas the tableau control is further done by the time recording software. The terminals, however, synchronise the attendance statuses among themselves, to be able to continue the control of the tableau

immediately after brief offline operation.
To enable this to function smoothly, the external bus controller needs to be equipped with an accumulator because, otherwise, the controller will not automatically begin with the polling after a power failure. The software version of the bus controller's EPROM must be at least release no. ZDICO.01.0V06.04.
The EPROM software version in the connected personnel tableau must be at least release no. TTABL.00.0V03.00.

If the time recording software has not sent out any tableau LED definitions to the TRS 33xx, the TRS 33xx uses the following standard settings:

| Entry action | red LED | yellow LED |
|---|---|---|
| after a correct "Clock in" entry | on | off |
| after a correct "Clock out" entry | off | off |
| after a correct "AOB-in" entry | on | off |
| after a correct "AOB-out" entry | off | on |
| after a correct "AOB-in" entry with reason 1 - 128 | on | off |
| after a correct "AOB-out" entry with reason 1 (for paid holiday) | on | on |
| after a correct "AOB-out" entry with reason 2 - 128 | on | off |

**UART** (see Ethernet)

**6. Suppress reader parameterization:** possible values: Yes/**No**

In general, the reader settings will be done centrally via the time recording software. In this case, this parameter must be set to **No** (factory setting).
The reader parametering via the time recording software can be suppressed (set to **Yes**), in order to set the reader settings directly at the terminal. Eventually existing reader settings of the time recording software will be transmitted indeed, but will be ignored by the terminal.

**7. Reader type parameter:** possible values: Magnetic/Chip card/Proximity/ Wiegand/infrared/inductive/variable ISO-Code

The <Reader type> specifies the reader built into the TRS 33xx according to the physical principle of its operation mode.
The devices with integrated (proX2, mifare) reader correspond to the contactless (proximity) reading principle. Due to this, the factory setting of this parameter is **Proximity**. For devices without an integrated reader (for connecting a customer-specific reader), this menu offers a list of further readers.

| >>>>> SYSTEM-SETUP <<<<< | Chip card reader |
|---|---|
| | **Proximity reader** |
| Type of reader | Wiegand reader |
| | Infrared reader |

A wrongly specified reader type prevents reading the identity cards! Depending on the selected <Reader type>, the following parameter entry is suppressed or adapted to the reader type.

**8. Reader design parameter:** possible values: Mortise reader/**Swipe reader**

This parameter will be diplayed only when the previous parameter has been set to any **reader type** exept **proximity**. For proximity readers this parameter will be skipped, continue directly with step 9.

Specifying the **reader design**, together with the previously specified **reader type**, defines the installed reader. If the r**eader type** is correctly given, but the **reader design** is entered incorrectly, the cards are rejected with a "Reading error" or no reaction occurs on the reader.

| >>>>> SYSTEM-SETUP <<<<< | Mortise reader |
|---|---|
| | **Swipe reader** |
| Reader design: | |

Magnetic card readers are generally to be defined as **swipe readers**!

Depending on the selected **reader type,** there may be different types of coding to be entered.

**9. Parameter Codierung:**

In this parameter, special data is required about the card coding type, depending on the previously set **reader type**. This parameter is also only interrogated by the TRS 33xx when required by the previously defined **reader type** and **reader design**.

When selecting a ISO coding (variable ISO code, inductive), information needs to be given to enable finding the identity card data efficiently; departing from which character the identity card is to be read (**Start IDCARD-NO:**), how many digits are to be interpreted as the identity card number (**Length IDCARD-NO:**), departing from which character the system number is to be found (**Start SYS-NO:**) and, likewise, for how long the characters read are to be interpreted as system numbers (**Length SYS-NO:**). Analog data is still to be entered for the version number (**Start VERSION-NO:**, **Length VERSION-NO:**).

In order to make this positioning clear, the **START DIGIT** of the ISO coding must be given (Standard: $B_{hex}$).

### Overview about the coding types and selection / input possibilities

The following overview refers to the both standard integrated reader types. The information about start and length refer to the most used types of coding. The coding types can (with exceptions) be used for each reader type.

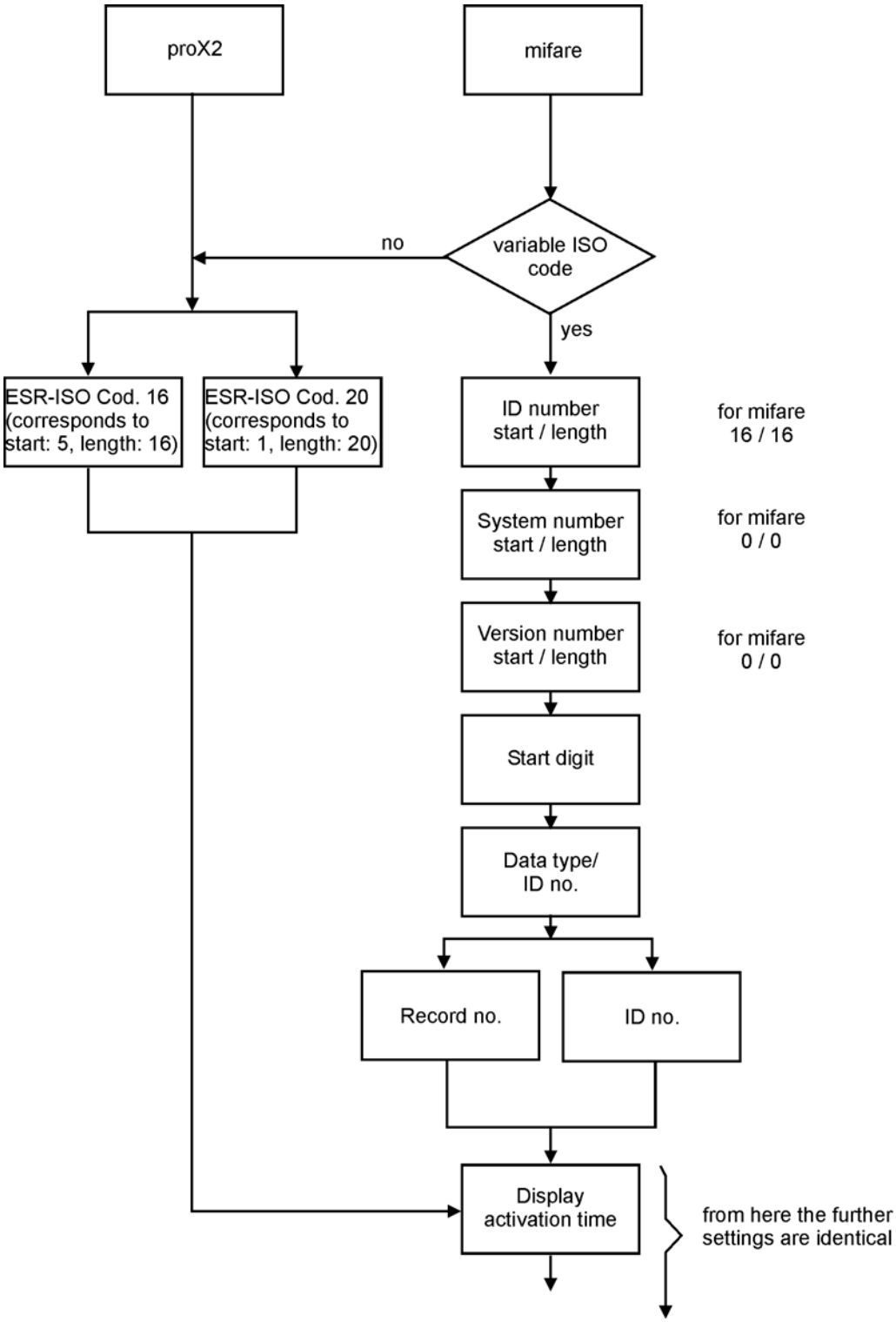

**10. Display activation time:** possible values: 0 - 254 minutes

| >>>>> SYSTEM-SETUP <<<<< | 29 |
|---|---|
| | **30** |
| Display | 31 |
| activation time : | 32 |

To reduce the power consumption, in this parameter a timeout in minutes can be defined to switch off the background illumination of the display, if no key has been pressed or no card has been read within. The next action (keystroke or reading) illuminates the display again. It remains active till the next expiration of the entered time.

Factory setting is 30 minutes / 0 = no deactivation.

**11. Display time balance in ¼ seconds parameter:** possible values: 1 - 32 seconds

With this parameter, the <Balance display duration> can be set to values between ¼ second and 8 seconds, as desired. The booking frequency can thereby be increased on the terminal. Default values are 8 * ¼ seconds = 2 seconds.

| >>>>> SYSTEM-SETUP <<<<< | 7 |
|---|---|
| | **8** |
| Display time balance | 9 |
| in 1/4 seconds : | 10 |

**12. Timeout for receiving in seconds:** possible values: 0 - 32 seconds

The <Timeout for receiving in seconds> is the maximum waiting time for an answer from the time recording software. During this time an hour glass will be displayed. The default value is 5 seconds. If the time recording software usually needs longer than the entered time, this parameter should be increased appropriately.

| >>>>> SYSTEM-SETUP <<<<< | 4 |
|---|---|
| | **5** |
| Timeout for receiving | 6 |
| in seconds : | 7 |

**13. Ignore logtime depending error reports**: possible values: Yes/**No**

This parameter is especially intended for OEM applications that may, in part, not send weekly patterns to the TRS 33xx terminal that would, in turn, send error messages ("No weekly pattern", "Time error") to the software. The default setting here is "No".

**14. Standard display type parameter:**

possible values: No display / **Time total** / Balance / Free time

(Applies only when the "Ignore logtime depending error reports" parameter is set to "Y" !)
This parameter is intended especially for OEM applications to set the account value generally to be displayed as entry confirmation.

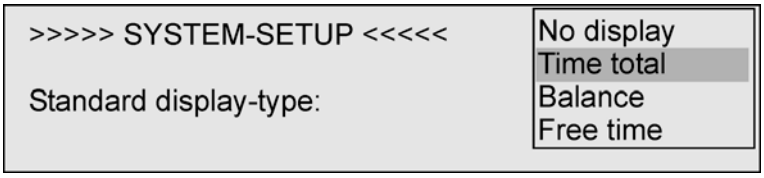


**15. Buzzer active:** possible values: **Active**/not active

Active: Acoustic confirmation of an entry or indication of an error (factory setting).
Not active: No acoustic confitrmation / indication.

**16. Execute terminal test:** possible values: Yes/**No**

At this concluding point, a terminal test can be carried out in case the TRS 33xx components should be checked.

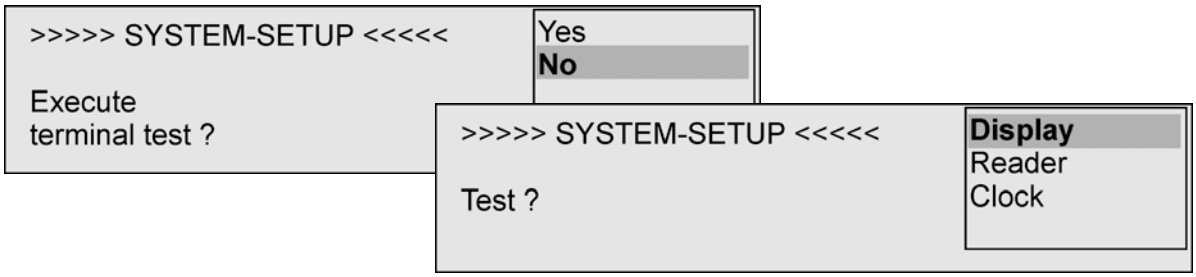


- The **display test** checks if all of the 240x128 pixel are activated or if single pixels are defective. To do this, the entire display is divided into two blocks of vertical stripes that can be actuated throughout with the "ENTER" key.

- The **reader test** offers the possibility to read out found, not marked identity cards. The terminal displays ID card number, version number and system number of the cards read.

- The **clock test** displays the current terminal date and the current terminal time.

Each of this test routines can be terminated by pressing any key. The TRS 33xx then returns to the selection of all test possibilities (see previous image).

The system prigramming can be concluded, at the latest, after this entry point with "**F1**". The selected entries will be saved.

## 5.2 Modify System-Setup

If the system data are to be modified at a terminal that is already parameterized, the **Info** softkey (at the far right) must be pressed in any display (example without a switch over table).

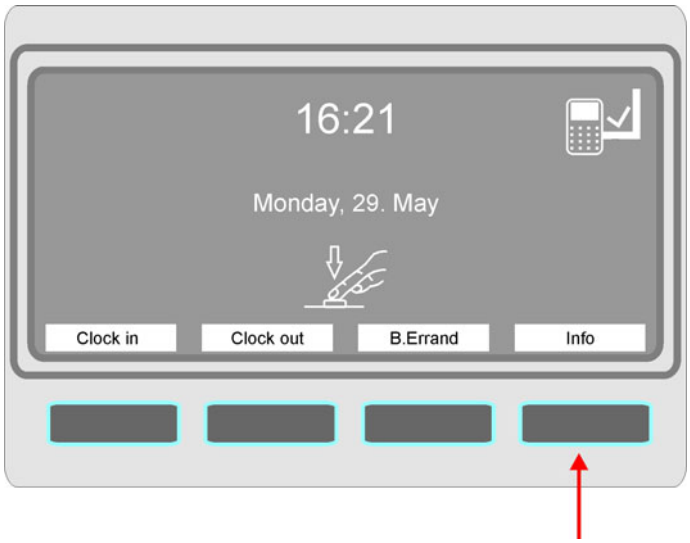


Press briefly **F1** in the following selection of the defined info fields (see. chapter 6.2.4).

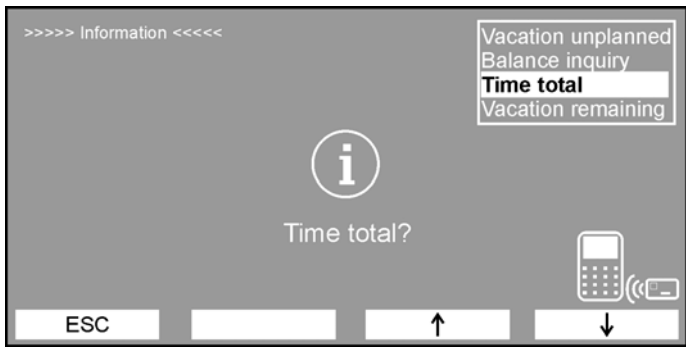


The current database occupancy appears (see. chapter 5.1.1 and chapter 6.2.5).

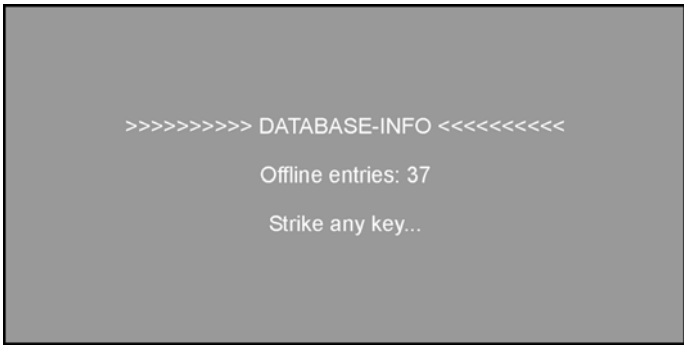


The further procedure corresponds to chapter 5.1.1.

## 5.3 Adjust Brightness / Contrast

Disconnect the device from the power supply.
Press the **F1** key and re-establish the power supply.

**or**

Open the device
Keep the **F1** key pressed anpush the **reset-push button** (see chapter 8 = Assembly diagram).

The following resolution pattern appears:

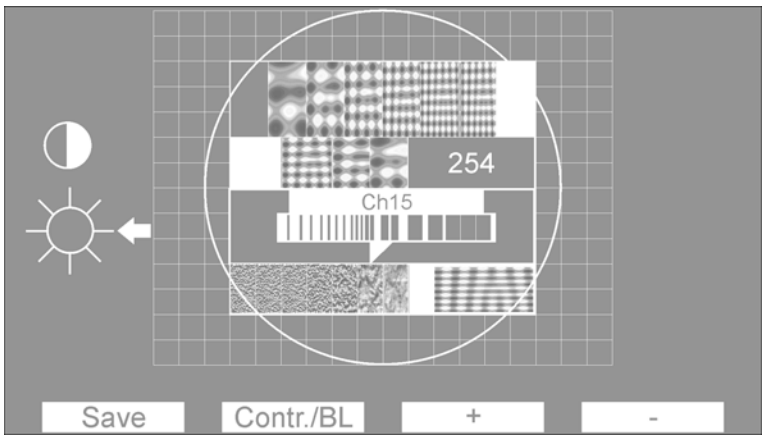


The softkey **Contr./BL** can e used to select between **contrast** and **brightness**
(= intensity of the background illumination.

The softkeys **+** and **-** can be used to increase/decrease the brightness / contrast. Accordingly, the value displayed in the box to the right changes. The modification of the brightness/contrast proceeds in very small steps, so the + or - keys must be pressed correspondingly long to cause a visible modification.

Factory settings: Background illumination = 255
Contrast = 238

Enter the softkey **Save** to store the entered values. The display returns to the initial image.

The display remains permanent active while being in modification mode for contrast / brightness, which means that the defined timeout (the display will be turned dark after expiration of that time) will be ignored.

# 6. Operation

## 6.1 Indications

### 6.1.1 Basic condition

The display in basic condtition is depending on an existing **switch-over table** defined in the time recording software.

If no switch-over table is defined, or not found for the current time, the device displays time, day, date and and promts to strike one of the four user keys (softkeys).

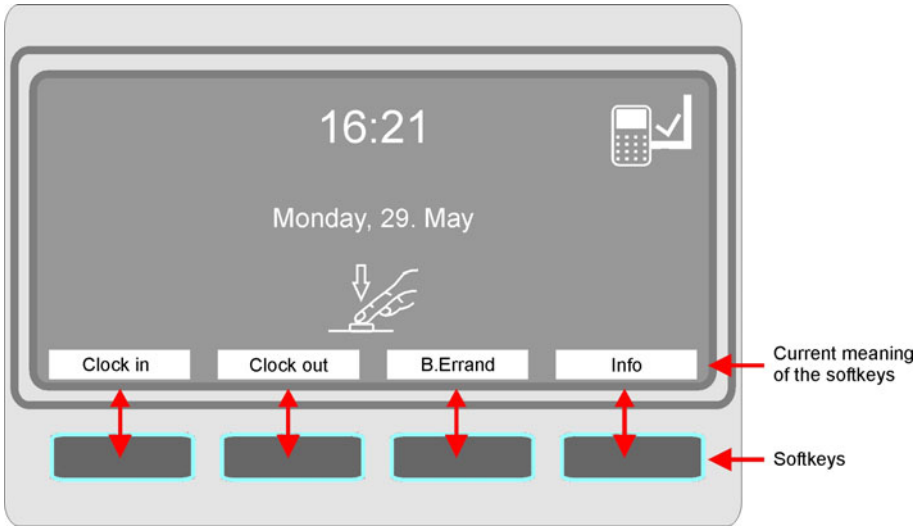


The key allocation of the softkeys depends on the section currently used. The individual description can be found in the corresponding paragraphs.

With this display, no entry is possible. First a required entry type must be selected by pushing the corresponding softkey.

If a switch-over table is defined, the terminal displays a definite entry type at a certain time (e. g. Clock in between 7:00 and 9:30 a. m., Clock out from 16:00 on). In this case the displayed entry can be done directly, or you can switch to another entry type by using one of the softkeys.

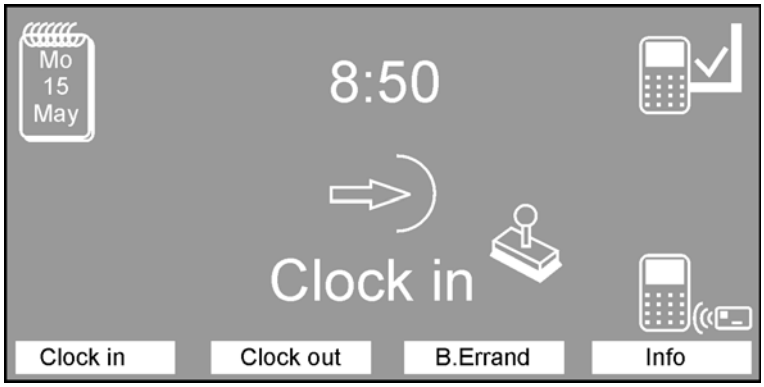


Further possibilities of the display presentation in basic condition according to a switch-over table see chapter 6.2.3 and 6.2.6.

### 6.1.2 Online

This symbol is displayed in the right upper corner, if a physical connection / communication to the time recording software exists or can be established within a defined time (see. chapter 5.1.2 Individual settings of System-Setup, step 5, Communication timeout).
Entries will be transmitted immediately; for requests, the current states of account will be taken from the database of the time recording software.

### 6.1.3 Offline

This symbol is displayed in the right upper corner, if no physical connection / communication to the time recording software exists or can not be established within a defined time (see. chapter 5.1.2 Individual settings of System-Setup, step 5, Communication timeout).
Entries will be stored in the terminal; requests display the last value saved in the terminal or nothing will be displayed (depending on the settings in the time recording software).

## 6.2 Entry types at theTerminal

In this chapter the operation possibilities and functions of the terminals are described. The following display presentations are reduced to the essential contents. There is no switsch-over table defined in the terminal and also no special option activated.

### 6.2.1 Clock-in, Clock-out entries

Clock-in and Clock-out entries indicate the beginning and the end of the working time. At the beginning of the working time, a Clock-in entry must be carried out, and at the end, a Clock-out entry.

#### 6.2.1.1 Clock-in entry

**a) Terminal is online**

The terminal is situated in basic condition (see chapter 6.1.1) and awaits key activity. The employee presses the key assigned with "**Clock-in**", the terminal expects the entry, presented by the symbol:

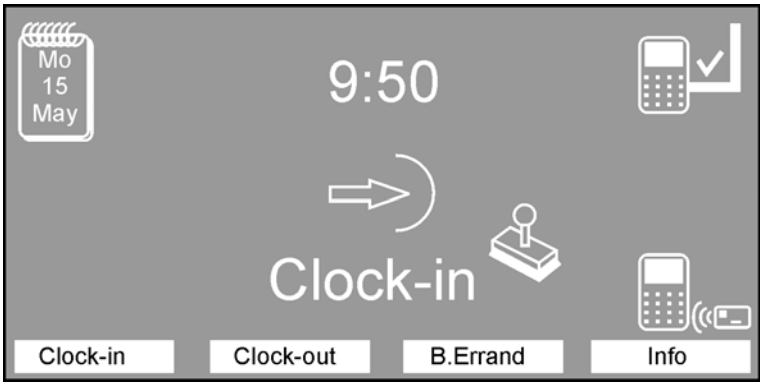


The employee books, the entry is processed in the time recording software. Depending on the duration of the processing, an hour glass can briefly be displayed. If the terminal can receive the data within the time defined in System-Setup (see chapter 5.1.2, step 12), the code number of the ID card and the confirmation "**Clock-in entered**" will be displayed in the left upper corner. The center of the display shows the information set as standard display type in the System-Setup (see chapter 5.1.2, step 14), in this example "Balance":

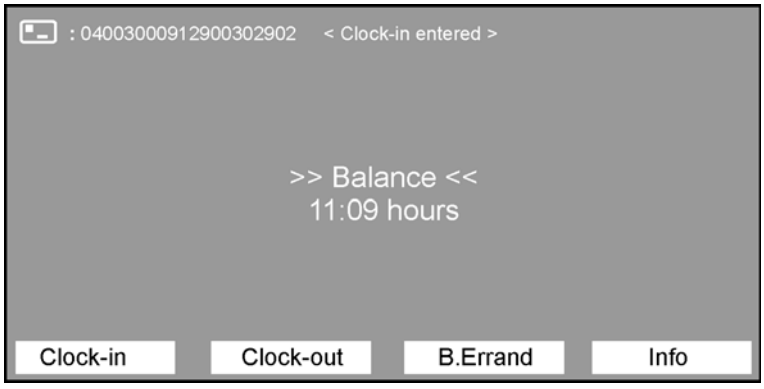

**b) Terminal is online, but answer from time recording software takes too long**

The terminal is situated in basic condition (see chapter 6.1.1) and awaits key activity. The employee presses the key assigned with "**Clock-in**", the terminal expects the entry, presented by the symbol:

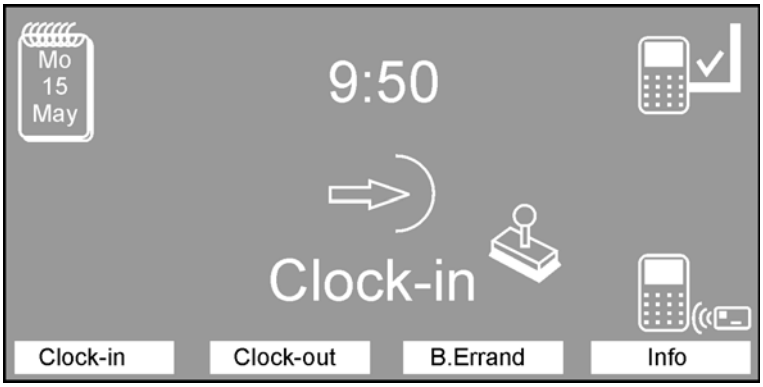


The employee books, the entry is processed in the time recording software. Depending on the duration of the processing, an hour glass can briefly be displayed. If the terminal can receive the data within the time defined in System-Setup (see chapter 5.1.2, step 12), the code number of the ID card and the confirmation "**Clock-in entered**" will be displayed in the left upper corner. The center of the display indeed shows the information set as standard display type in the System-Setup (see chapter 5.1.2, step 14), in this example "Balance", but the current value can not be calculated. The last value stored in the terminal followed by two exclamation marks will be displayed instead:

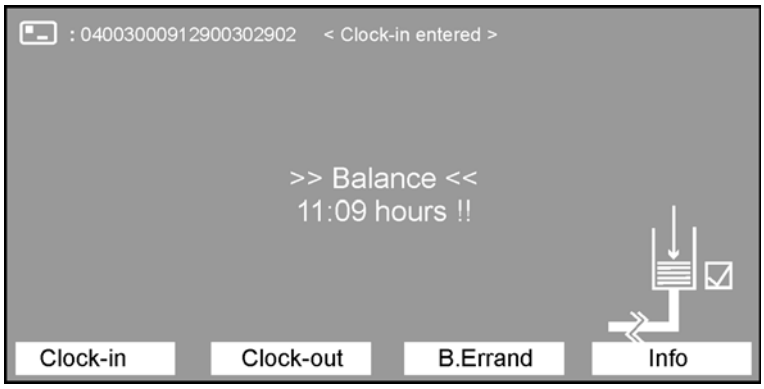


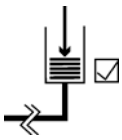

Additionally, the symbol to the left is displayed, which means the entry has been processed correctly. It is buffered in the terminal and will be transmitted to the time recording software, as soon as the communication can be re-established.

**c) Terminal is online, but entry sequence is not correct**

If an employee missed the correct entry sequence, for example the following display will appear:

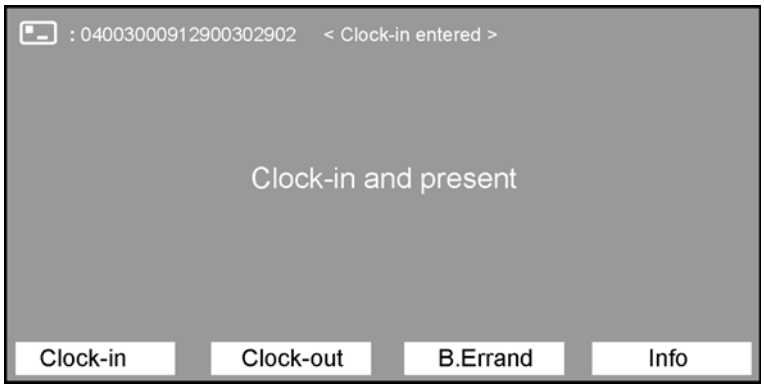


In this case, the employee must make a Clock-out entry to maintain the entry rhythm.

**d) Terminal is offline**

The terminal is offline (see chapter 6.1.3), indicated by the symbol:

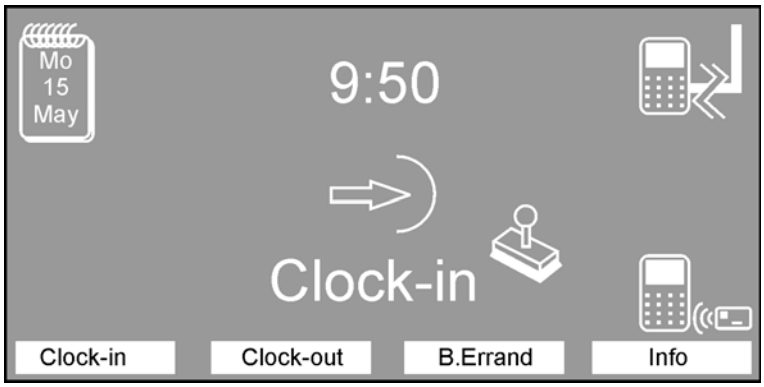


The further procedue is according to step b).

### 6.2.1.2 Clock-out entry

#### a) Terminal is online

The terminal is situated in basic condition (see chapter 6.1.1) and awaits key activity. The employee presses the key assigned with "**Clock-out**", the terminal expects the entry, presented by the symbol:

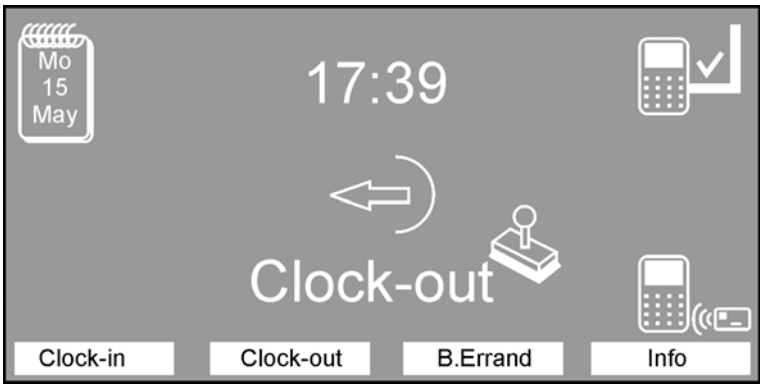


The employee books, the entry is processed in the time recording software. Depending on the duration of the processing, an hour glass can briefly be displayed. If the terminal can receive the data within the time defined in System-Setup (see chapter 5.1.2, step 12), the code number of the ID card and the confirmation "**Clock-out entered**" will be displayed in the left upper corner. The center of the display shows the information set as standard display type in the System-Setup (see chapter 5.1.2, step 14), in this example "Balance":

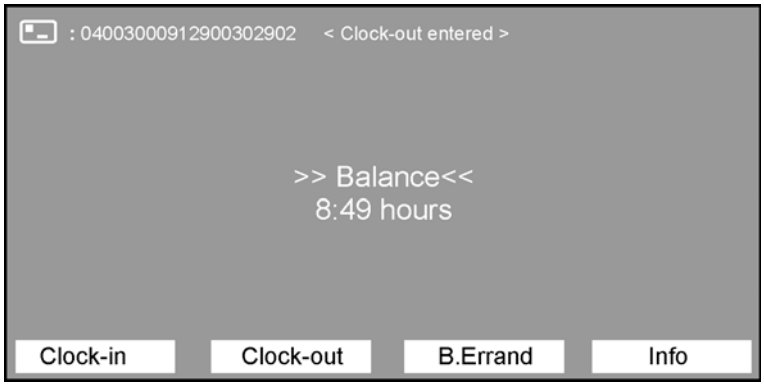

**b) Terminal is online, but answer from time recording software takes too long**

The terminal is situated in basic condition (see chapter 6.1.1) and awaits key activity. The employee presses the key assigned with "**Clock-out**", the terminal expects the entry, presented by the symbol:

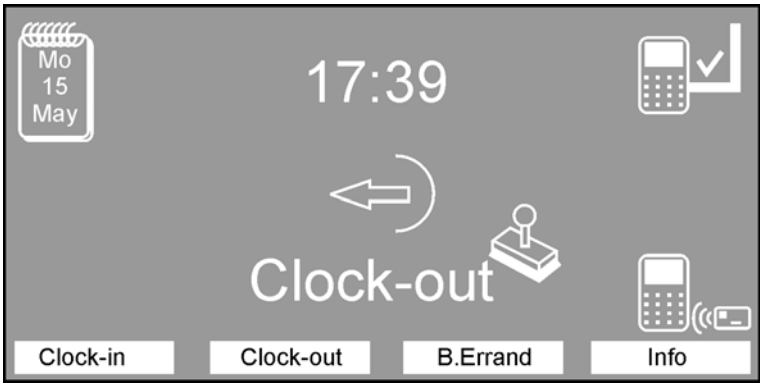


The employee books, the entry is processed in the time recording software. Depending on the duration of the processing, an hour glass can briefly be displayed. If the terminal can receive the data within the time defined in System-Setup (see chapter 5.1.2, step 12), the code number of the ID card and the confirmation "**Clock-out entered**" will be displayed in the left upper corner. The center of the display indeed shows the information set as standard display type in the System-Setup (see chapter 5.1.2, step 14), in this example "Balance", but the current value can not be calculated. The last value stored in the terminal followed by two exclamation marks will be displayed instead:

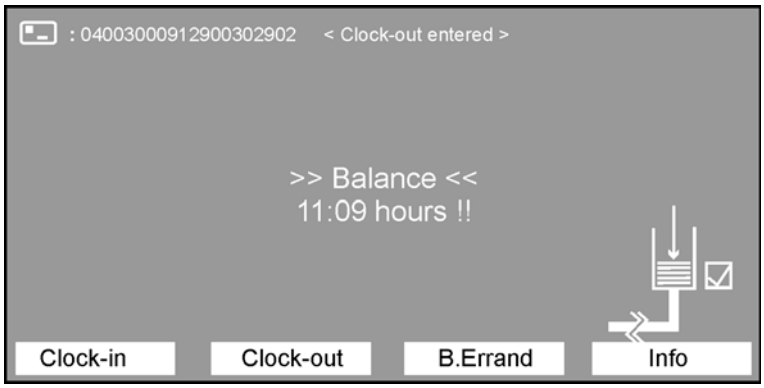


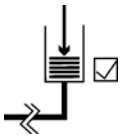

Additionally, the symbol to the left is displayed, which means the entry has been processed correctly. It is buffered in the terminal and will be transmitted to the time recording software, as soon as the communication can be re-established.

**c) Terminal is online, but entry sequence is not correct**

If an employee missed the correct entry sequence, for example the following display will appear:

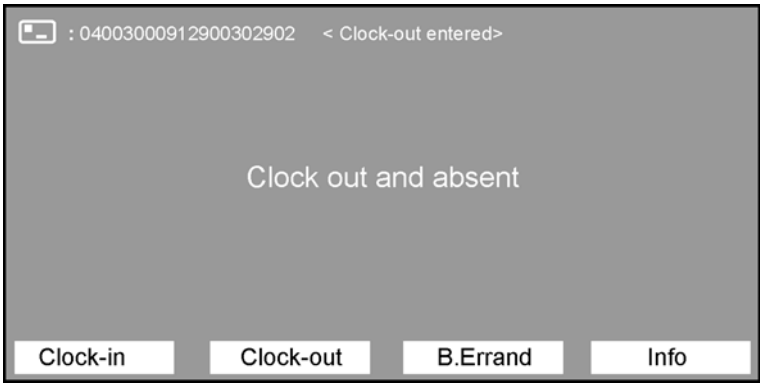


In this case, the employee must make a Clock-in entry to maintain the entry rhythm.

**d) Terminal is offline**

The terminal is offline (see chapter 6.1.3), indicated by the symbol:

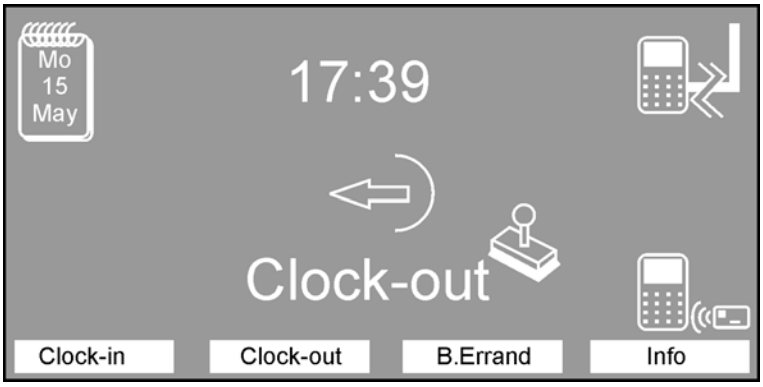


The further procedue is according to step b).

## 6.2.2 Business errand entry

The business errand entry shows that an employee authorized for outside official business (personnel master record) leaves his workplace during the working time to undertake official business outside of his working facility. This can be a brief absence in an other building as well as business trips over several days.
Only employees that have logged in their presence with a "Clock-in" entry, can thereafter carry out a "AOB-out" entry (AOB = Away on business).
There are 3 different types of busines errand entries, which are to be set in the time recording software.
The Online-/Offline behavior is similar to the Clock-in / Clock-out entries. Due to this we renounce a detailed presentation.
The reasons for absence must/can be defined in the time recording software.

The employee presses the key assigned with "**B.Errand**". There is no entry possibility in the next screen, except a selection between AOB-in and AOB-out or terminatin by ESC.

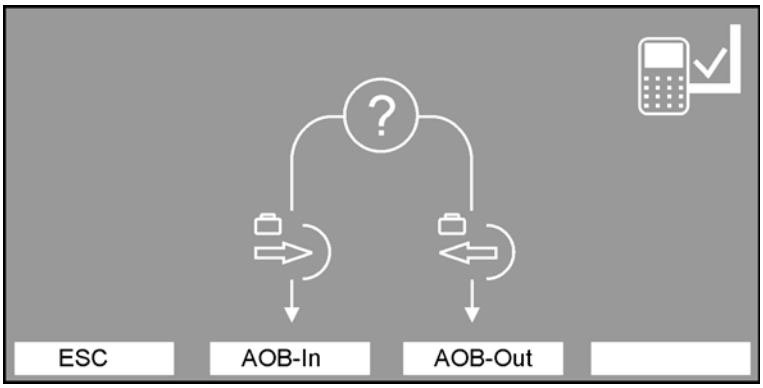


### 6.2.2.1 Simple Business Errand entry (without reason)

The terminal is situated in basic condition (see chapter 6.1.1) and awaits key activity. The employee presses the key assigned with "**B.Errand**", the terminal expects the entry, presented by the symbol:

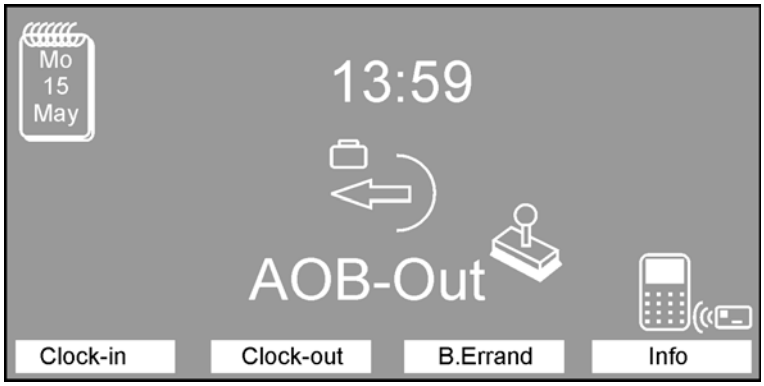


The entry procedure and the terminal displays are similar to chapter 6.2.1.

#### 6.2.2.2 Business Errand entry with reason 1

Procedure as described in 6.2.2.1, but a reason (in this variant consecutively numbered) must be selected (using the arrow keys) before the entry can be done.

#### 6.2.2.3 Business Errand entry with reason 2

Procedure as described in 6.2.2.1, but a reason (in this variant the reason is displayed in plain-text) must be selected (using the arrow keys) before the entry can be done.

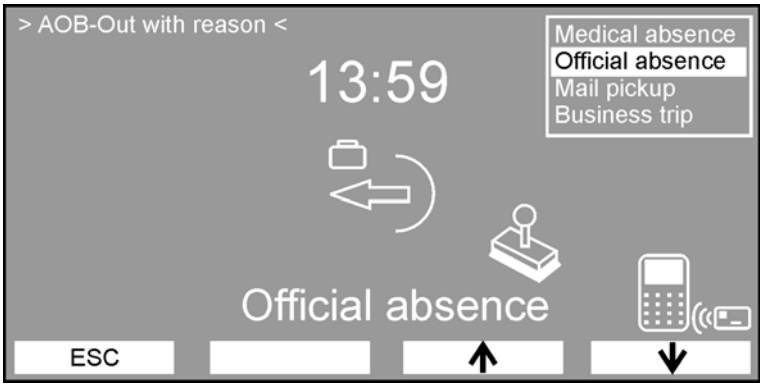


#### 6.2.2.4 End of business errand

Depending on the definition in the System-Setup (see chapter 5.1.2 step 4) a normal Clock-In entry will do (see chapter 6.2.1.1) or an AOB-In entry is required (procedure is similar to an AOB-Out entry).

### 6.2.3 Neutral Entries

With OEM applications, a switch-over table can be defined to display the entry type “**Ready**”.

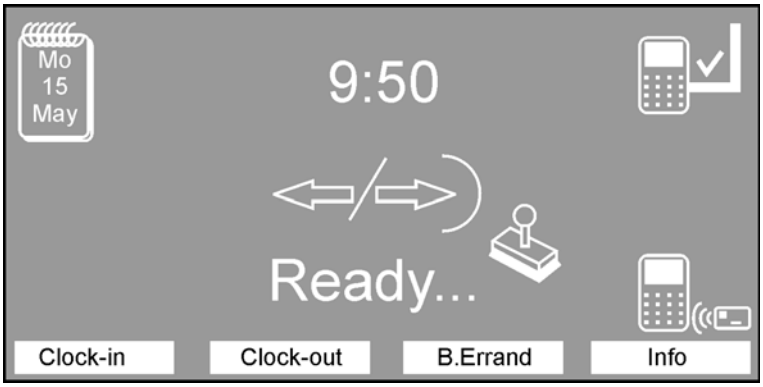


An ID-card can be read without any pre-selection of a certain entry type. The meaning of the individual entry will be found out in the time recording software (see also chapter 6.1.1).

In addition, all the entry types indicated by the softkeys are possible.

### 6.2.4 Querying the stored information fields

The information fields can be queried on the TRS 33xx by the personnel, if the information field desired is defined in the software and the individual field (or all of them, maximum 200) is allocated to the TRS 33xx.

Depending on the setting of the information field in the software, the query is possible either in online or offline operation or set to depend on the online connection of the TRS 33xx terminal to the software. The following example illustrates the principle procedure of using an information field.

The terminal is situated in the default status and awaits key activity. The employee presses the key assigned with "**Info**". The terminal expects the entry, presented by the symbol:

The terminal displays the first four information fields given (if available):

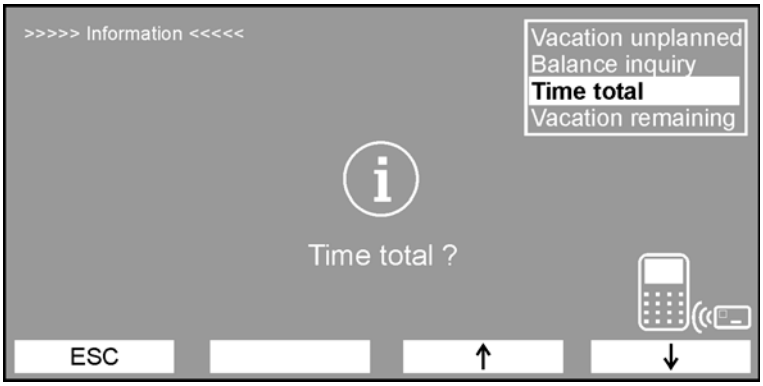

The employee, using the two keys on the right (arrow keys) now selects the account of which he would like to inquire the current status. Then he identifies himself at the terminal with his identity card.

The terminal sends the query directly (online) to the PC software and the software sends the current calculated data base value back to the terminal, provided with the allocated output texts as specified at the info field definition.

In the example below, the data base value with explanatory text reads:

Up to 200 such data base inquiries can be defined and used on one or several TRS 33xx systems. Doing this, the information fields can be individually allocated to each single TRS 33xx, so that, e.g., one terminal has purely a booking function, while another terminal acts as an inquiry terminal.

After the display of the information field has taken place, the display returns to the basic condition (time/date) and eventually expects further data base inquiries or an entry.

By using the individual formation of the output texts, each data base inquiry can be provided with more or less explanatory text as specified by the operator (see the manual of the specific time recording software, text length restrictions!).

### 6.2.5 Querying the data base occupancy

Information about the occupancy of the database within the terminal can be found out:

➜ as a brief overview according to chapter 5.2

➜ detailed by pressing the softkey **DB** in the System-Setup (see chapter 5.1.1).

Example:

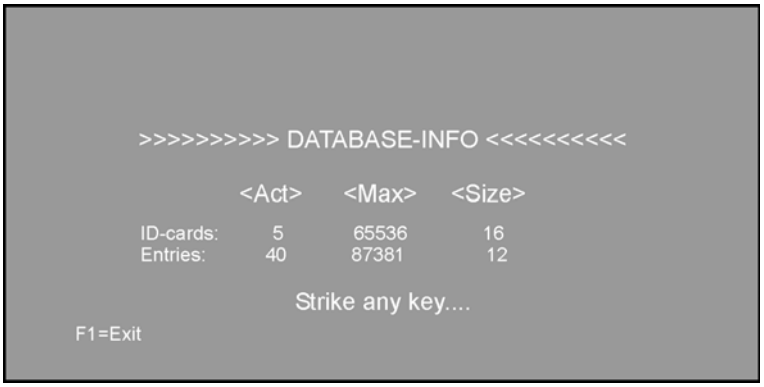

Displayed are the values actual (Act), maximum (Max) and the size of an individual data record, separated by ID-cards and entries (hereby the entries displayed in the column <Act> are the number of terminal-buffered offline entries at the moment, which automatically will be sent to the time recording software, as soon as the terminal gets online again).

By pressing any key (except F1 = Exit) another display opens:

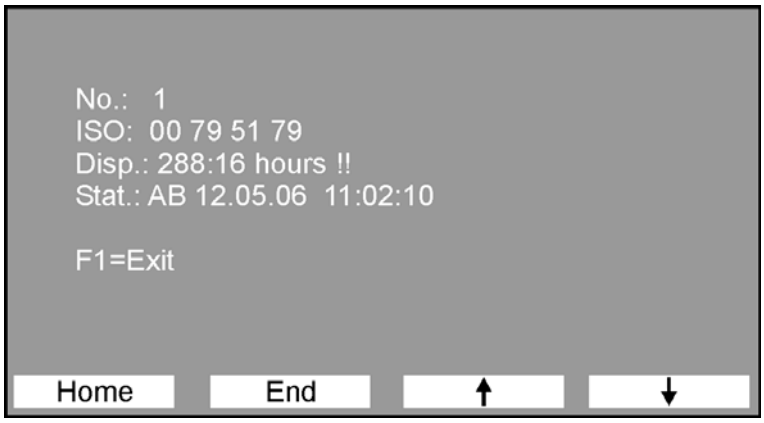


No.: = ID number
ISO: = Coding of the IC-card in Hex
Disp.: = Current information shown on the display
Stat.: = Status (e. g. date/time of the last entry)

Home = jump to the first data record
End = jump to the last data record
⇑ = next ID
⇓ = previous ID
F1 = Exit

### 6.2.6 Time total request via switch-over table

With OEM applications, a switch-over table can be defined to display the inquiry type "**Time total**".

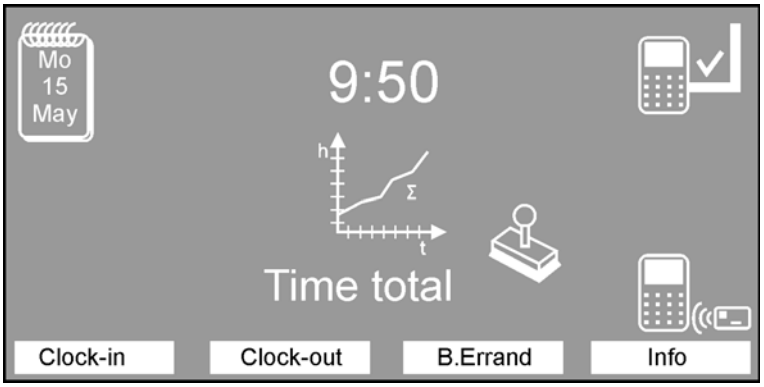


An ID-card can be read without any pre-selection of a certain entry type (see also chapter 6.1.1). This request is similar to chapter 6.2.4, except the time total inquiry is predefined permanently (see also chapter 6.1.1).

In addition, all the entry types indicated by the softkeys are possible.

# 7. Error messages

An error message appears as a text in the display and is accompanied by a long buzzing sound. If the reader can recognize the identity card number, this will be shown above on the display:

**Error: 0010**

| Message | Meaning |
|---|---|
| **AOB entry not allowed** | The official business key is blocked for this identity card. An official business authorization is not noted for this identity card. |
| **AOB-Out time error** | The AOB-Out entry took place beyond the time span for "AOB enry allowed" defined in the daily work or no time span was defined. |
| **AOB-In time error** | The AOB-In entry took place beyond the time span for "AOB enry allowed" defined in the daily work pattern or no time span was defined. |
| **Clock-In and present** | ENTERING and present. This message appears when two Clock-In entries occur in a row without an Clock-Out entry occuring between them. This message appears in ONLINE operation on remote station terminals within the booking permission, otherwise, <Bkng. beyond perm.> is displayed. |
| **Clock-In time error** | The Clock-In entry occured beyond the allowed period. (s. Clock-Out time error) |
| **Clock-Out and absent** | EXITING and absent. Same as Clock-In and present, except that, between two Clock-Out entries, the Clock-In entry was forgotten. This message appears in ONLINE operation on remote station terminals within the booking permission, otherwise, <Bkng. beyond perm.> is displayed. |
| **Clock-Out time error** | The Clock-Out entry took place beyond the time span for "Booking allowed" defined in the daily work pattern. |
| **Data base not initialized** | No data can be stored in the terminal because the data base has not yet been set-up in the terminal. This happens during the initial start-up. |
| **Daily pattern not found**<br>**Weekly pattern not found** | The terminal has not been loaded accordingly with data or has had no connection to the computer for several days no connection to the computer. |
| **EEPROM fault**<br>**> system halted** | The EEPROM installed in the terminal is faulty and the terminal is no longer ready for operation. |
| **Entry memory full !** | The memory in the terminal used for buffering the offline entries is full because the master computer has not picked up data from the terminal for too long a time. |

| | |
|---|---|
| **Entry time error** | This message comes from the master computer and denotes the following:<br>The booking sequence Clock-In / Clock-Out together with the respective entry times was incorrect on this day. The computer can therefore no longer process the entries and refuses every entry from here on with this message. |
| **Identity card unknown** | Identity card unknown. The identity card used for booking is not registered in the terminal. |
| **Info inquiry not permitted** | The <Info> key is blocked for this identity card. An authorization for the <Info> display is not noted for this identity card. |
| **Key not allowed** | The key activated by the user has not been enabled for him in the time recording software. |
| **No identity cards** | The terminal has been parameterized but no identity card data has been downloaded. |
| **Reason incorrect** | During a Business errand entry with reason, the absence reason selected cannot be allocated by the system; possibly, the current absence reason table is not stored in the terminal. |
| **Reading error !!** | The card was not read properly. The booking must be repeated. |
| **System number incorrect** | The identity card used for the booking has the incorrect system number. |
| **Time total inquiry not allowed** | The authorization for time total inquiry at the terminal is not assigned to the employee in the personnel master record of the time recording software. |
| **>>> Terminal not ready to run <<<** | This message is displayed as long as the terminal is not in a parameterized state. |
| **Version number incorrect** | The identity card used for the booking has the wrong version number. |
| **Weekly pattern <0> not allowed** | This message can only appear in an OEM application of the terminal, when a personnel master record has no valid weekly pattern number (1 - 250) assigned to it. |

# 8. Component Diagram and Terminal Assignment

Diagram presentation of the connections, DIP switches and LEDs in mounted and opened condition of the terminal.

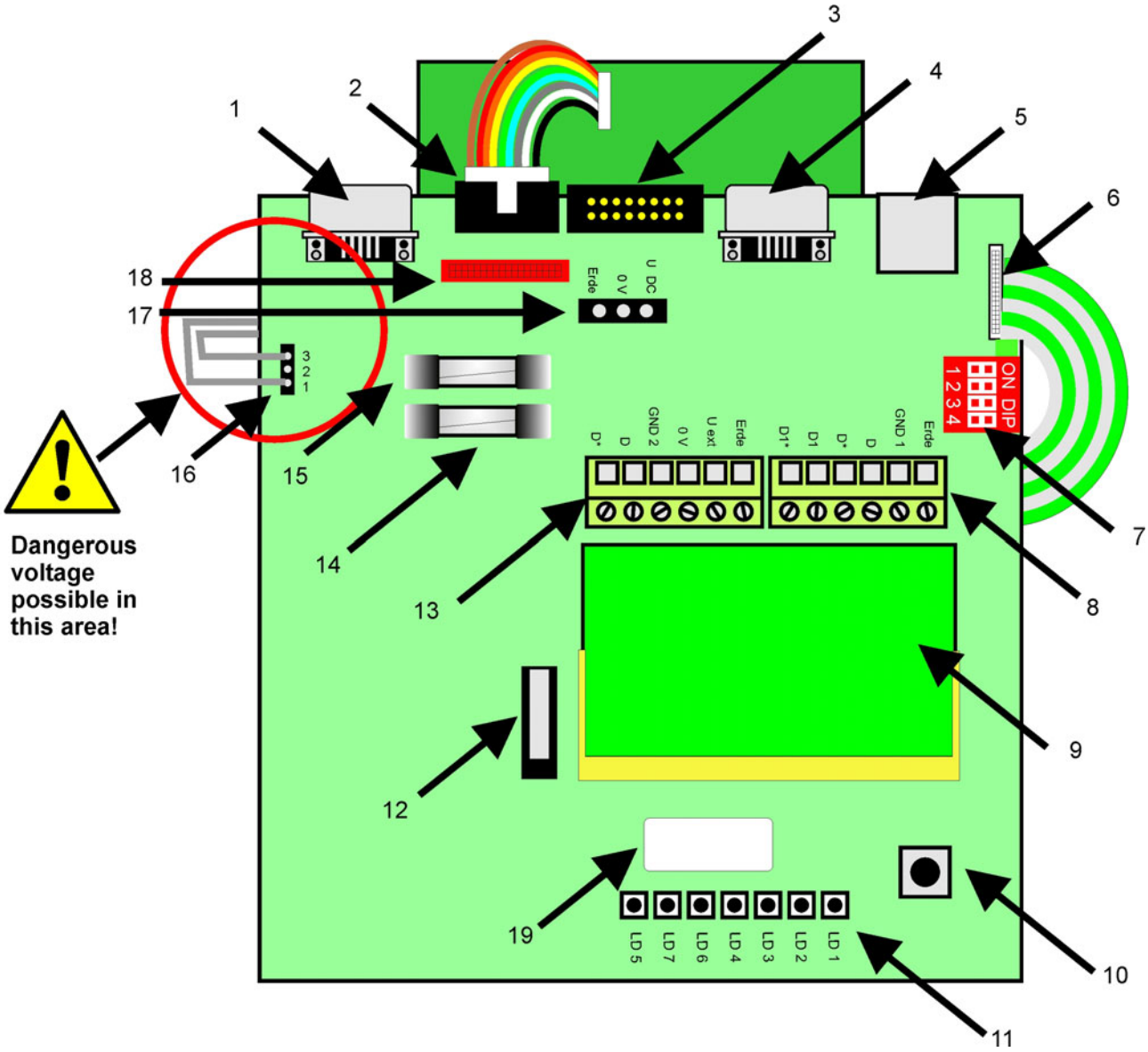

**1 = RS 232 interface (male) for barcode reader connection**[5]

| Assignment (PIN) | Designation |
|---|---|
| 1 | IN |
| 2 | RXD |
| 3 | TXD |
| 4 | OUT |
| 5 | 0 V |
| 6 | Free |
| 7 | RTS |
| 8 | CTS |
| 9 | +5 V DC |

**2 = Reader interface (10 pole)**

The item numbers 029803.UL - 029804.UL have already an existing connection from this interface to the integrated reader.

| Assignment (PIN) | Designation |
|---|---|
| 1 | Free |
| 2 | 0 V |
| 3 | $U_{ext} = U_{DC}$ - 1,4 V |
| 4 | D - RS 485 |
| 5 | D* - RS 485 |
| 6 | Clock |
| 7 | Data |
| 8 | Free |
| 9 | Free |
| 10 | Free |

A reader is only permitted to be connected to one of the two reader´s plug-in connectors (2 or 18).

5 Not supported by the current software.

**3 = only for inhouse use of the manufactorer / do not connect anything!**

**4 = RS 232 interface (male) for modem or serial interface (COMx) connection.**

The RS 232-host interface (modem or COMx - connection) and the RS 485-host interface (8) can not be operated at the same time.

| Assignment (PIN) | Designation |
|---|---|
| 1 | DCD |
| 2 | RXD |
| 3 | TXD |
| 4 | DTR |
| 5 | 0 V |
| 6 | DSR |
| 7 | RTS |
| 8 | CTS |
| 9 | RI |

**5 = Ethernet interface**

RJ45 CAT 5 (female), 10/100 Mbit

**6 = Plug SK4 for plug-in connector of foil keypad (10 pole)**

The foil keypad has a 10 pole and a 3 pole (see 16) contact tounge.
The 10 pole contact tounge is to be put in the plug SK4 and barred. In ex-works condition this connection does already exist.

**7 = DIP-Switches**

With the 4 DIP-Switches, the terminating resistors of the RS 485 host interface (see 8) can be placed. Note: All 4 switches must be always in the same position.

| Switch position | Meaning |
|---|---|
| all 4 ON | Terminating resistors active |
| all 4 OFF | Terminating resistors not active |

The terminating resistors must be placed in each **first** and in each **last** device of a line. The device does not mandatorily need to be a TRS 33xx (see examples on previous page).

Examples: 1 line:

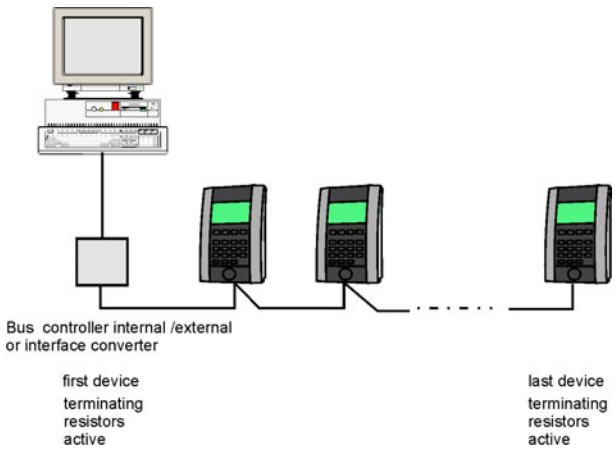


2 lines:

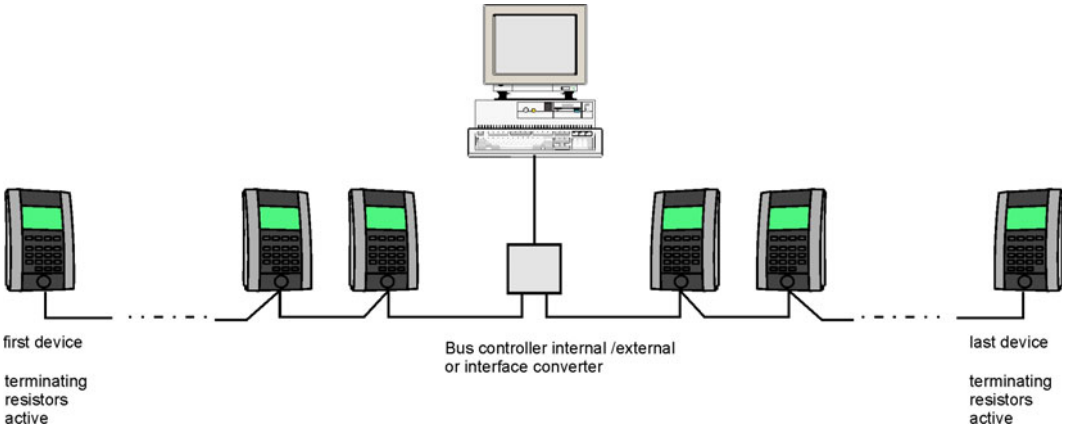


**8 = RS 485-Host interface**

| Assignment (PIN) | Designation |
|---|---|
| 1 | Shielding |
| 2 | GND 1 |
| 3 | D |
| 4 | D* |
| 5 | D1 |
| 6 | D1* |

With the 4 DIP-Switches, the terminating resistors of the RS 485 host interface (see 7) can be placed.

The RS 485-host interface and the RS 232-host interface (moModem or COMx - connection, see 4) can not be operated at the same time.

### 9 = CPU-Board

**Caution! Loss of warranty possible!**

This pcb must not be removed! The warranty expires by removing!

### 10 = Reset-pushbutton

The terminal reboots by pressing this button (see also 5.3 = Adjust brightness / contrast).

**Caution! Loss of data possible!**

Not saved data might be lost!

### 11 = LEDs

| LED | Color | Meaning |
|---|---|---|
| 1 | green | for Ethernet |
| 2 | green | for Ethernet |
| 3 | red | TXD of host / modem interfaces RS 485 (8) and RS 232 (4) |
| 4 | green | RXD of host / modem interfaces RS 485 (8) and RS 232 (4) |
| 5 | green | Software LED |
| 6 | green | RXD of RS 485 module bus interface (13), also with internal reader |
| 7 | red | TXD of RS 485 module bus interface (13), also with internal reader |

### 12 = Tamper / Cover contact

### 13 = RS 485 Module bus interface

| Assignment (PIN) | Designation |
|---|---|
| 1 | Shielding |
| 2 | $U_{ext} = U_{DC} - 1{,}4$ V<br>max. current drain see technical data |
| 3 | 0 V |
| 4 | GND 2 |
| 5 | D |
| 6 | D* |

The terminating resistors of the 485-module bus interface are permanently activated.
Deactivation is not possible.

**14 = Fuse FS 1**

Internal protection, values see chapter 11 = technical data.

**15 = Fuse FS 2**

Protection of external connections (reader, $U_{ext}$, module bus), values see chapter 11 = technical data.

**16 = Plug PL 8 for plug-in connector of foil keypad (3 pole)**

The foil keypad has a 10 pole and a 3 pole (see 6) contact tounge.
The 10 pole contact tounge is to be put in the plug SK4 and barred. In ex-works condition this connection does already exist.

**Caution! There is a voltage of approximaltely 100 V AC at the plug-in connector!**

This connection is used to realize the backgroung illumination.

| Assignment (PIN) | Designation |
|---|---|
| 1 | approx. 100 V AC |
| 2 | Free |
| 3 | 0 V |

**17 = Input voltage (3 pole)**

| Assignment (PIN) | Designation | Comment |
|---|---|---|
| 1 | $U_{DC}$ | Power supply input for direct current voltage (see technical data) no output |
| 2 | 0 V | |
| 3 | Ground | |

**18 = Reader interface (16 pole)**

| Assignment (PIN) | Designation |
|---|---|
| 1 | Clock |
| 2 | Data |
| 3 | 0 V |
| 4 | D - RS 485 |
| 5 | $U_{ext} = U_{DC}$ - 1,4 V |
| 6 | D* - RS 485 |
| 7 | Free |
| 8 | Free |
| 9 | Free |
| 10 | Free |
| 11 | Free |
| 12 | $U_{ext} = U_{DC}$ - 1,4 V |
| 13 | Free |
| 14 | Free |
| 15 | Free |
| 16 | 0 V |

A reader is only permitted to be connected to one of the two reader´s plug-in connectors (2 or 18).

**19 = Sticker with MAC-address**

# 9. FCC Statements

The device can contain the transmitter modules:

➜ reader module IC:6587A-X0400600 / FCC ID: UA2X0400600

➜ mifare reader module IC:6587A-X0402100 / FCC ID: UA2X0402100

## 9.1 Statement required by 15.19 and RSS-210

This device complies with Part 15 of the FCC Rules and with RSS-210 of Industry Canada.

Operation is subject to the following two conditions:
(1) this device may not cause harmful interference, and
(2) this device must accept any interference received, including interference that may cause undesired operation.

## 9.2 Statement required by 15.21

**Warning:** Changes or modifications made to this equipment not expressly approved by Honeywell may void the FCC authorization to operate this equipment.

## 9.3 Statement required by 15.105

This equipment has been tested and found to comply with the limits for a Class B digital device, pursuant to Part 15 of the FCC Rules. These limits are designed to provide reasonable protection against harmful interference in a residential installation. This equipment generates, uses and can radiate radio frequency energy and, if not installed and used in accordance with the instructions, may cause harmful interference to radio communications. However, there is no guarantee that interference to radio or television reception, which can be determined by turning the equipment off and on, the user is encouraged to try to correct the interference by one or more of the following measures:

➜ Reorient or relocate the receiving antenna.
➜ Increase the separation between the equipment and receiver.
➜ Connect the equipment into an outlet on a circuit different from that to which the receiver is connected.
➜ Consult the dealer or an experienced radio/TV technician for help.

# 10. Correct use

Tap the key foil lightly with fingertips. Never strike or apply strong pressure to touch panel.
The use of hard or sharp objects, including fingernails, rings, etc. can cause scratches and damage to touch panel.

To clean: Wipe touch panel with soft lint-free dry cloth, or one that has been lightly dampened with water.
The use of caustic liquids such as benzene, thinners, alcohol, solvents, or abrasive cleaners of any kind will lead to surface or screen deterioration and damage.

# 11. Technical Data

| | |
|---|---|
| Rated operating voltage $U_{DC}$: | 12 V DC |
| Operating voltage range: | Item no. 029802.UL: 8 V DC to 32 V DC (*)<br>Item no. 029803.UL: 10 V DC to 16 V DC (*)<br>Item no. 029804.UL: 9 V DC to 31 V DC (*) |
| Max. residual ripple of supply voltage: | 35 mV |
| Current consumption$_{typ}$ with 12 V: | Item no. 029802.UL: 280 mA<br>Item no. 029803.UL: 300 mA<br>Item no. 029804.UL: 300 mA |
| Current consumption$_{max.}$ | 700mA |
| Operating temperature range: | 0˚C to +45˚C |
| Storage temperature range: | -25˚C to +70˚C |
| Humidity: | up to 95% without condensation |
| Protection class according to DIN 40050: | IP 53 (**) |
| Environment class according to VdS | II |
| Fuse FS 1 (internal): | 0,5 AT / 250 V |
| Fuse FS 2 (reader, $U_{ext}$, module bus): | 1 AT / 250 V |
| Weight: | 0,9 kg |
| Display: | 240 x 128 pixel graphic LC-Display with background illumination |
| Color: | Center part anthracite, similar to RAL 7016<br>side parts white/alu, similar to RAL 9006 |

Only use a 12 V power supply unit with an output voltage without ground potential and a maximum power current of 8 A.

**Line cross section:** up to 5 m line length min. 0,4 mm²
up to 15 m line length min. 0,75 mm²

A maximum current drain of 1 A is allowed (internal reader connector + bus module terminals),altogether protected by FS2.

(*) Note, that the output voltage $U_{ext}$depends on the operating voltage ($U_{ext} = U_{in}$ - 1,4 V). That means that an operating voltage must be chosen to guarantee an operation of the readers, bus modules etc. according to their specifications.

(**) The constructional properties of the consistence of the wall must comply with the IP class requirements. Use the included sealing and assemble the device according to IP 53 (see also chapter 3 = mounting).

Dimensions in mm:

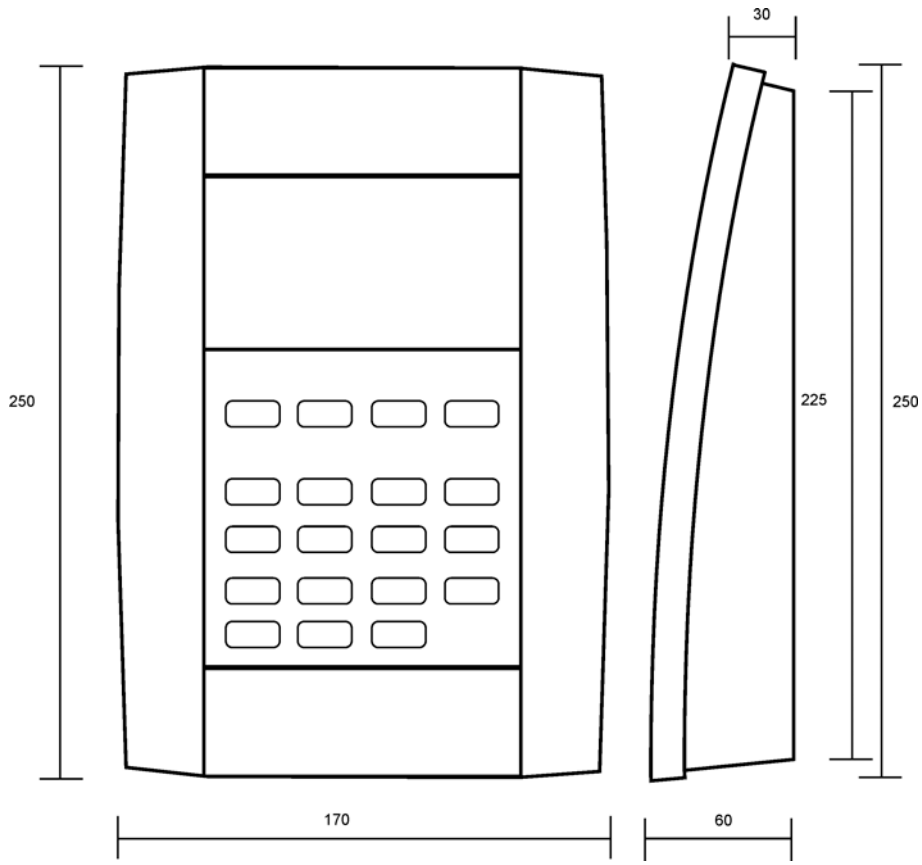

**Honeywell Security Deutschland**

Novar GmbH

Johannes-Mauthe-Straße 14

D-72458 Albstadt

www.honeywell.com/security/de

info.security.de@honeywell.com

P40140-49-UL0-00
07.07.2006
© 2006 Novar GmbH