FCC 47 CFR PART 15 SUBPART C AND ANSI C63.4 : 2003

TEST REPORT

For

easy key

Model : GSK01

Issued for

PRESIDENT INDUSTRY DEVULOPMENT(SHENZHEN) CO., LTD.

Bu Long road, Shang Tang village, Long Hua Street,

Bao An, Shen Zhen City

Issued by

NVLAP LAB CODE 200118-0

Compliance Certification Services Inc.
Hsinchu Lab.
Rm. 258, Bldg. 17, NO.195, Sec.4 Chung HsingRd.,
ChuTung Chen, Hsinchu, Taiwan 310, R.O.C
TEL: (03) 591-0068
FAX: (03) 582-5720

Testing Laboratory
0240

Note: *This report shall not be reproduced except in full, without the written approval of Compliance Certification Services Inc. Ltd. This document may be altered or revised by Compliance Certification Services Inc. personnel only, and shall be noted in the revision section of the document.*

TABLE OF CONTENTS

TITLE PAGE NO.

1. TEST REPORT CERTIFICATION ***3***

2. EUT DESCRIPTION ***4***

2.1 DESCRIPTION OF EUT & POWER *4*

3. DESCRIPTION OF TEST MODES ***4***

4. TEST METHODOLOGY ***4***

5. FACILITIES AND ACCREDITATIONS ***5***

5.1 FACILITIES *5*

5.2 EQUIPMENT *5*

5.3 LABORATORY ACCREDITATIONS LISTINGS *5*

5.4 TABLE OF ACCREDITATIONS AND LISTINGS *6*

6. CALIBRATION AND UNCERTAINTY ***7***

6.1 MEASURING INSTRUMENT CALIBRATION *7*

6.2 MEASUREMENT UNCERTAINTY *7*

7. SETUP OF EQUIPMENT UNDER TEST ***8***

8. APPLICABLE LIMITS AND TEST RESULTS ***9***

8.1 26dB BANDWIDTH *9-10*

8.2 RADIATED EMISSIONS *11*

8.8.1 TRANSMITTER RADIATED SUPURIOUS EMSSIONS *11-14*

8.8.2 FIELD STRENGTH OF FUNDAMENTAL EMISSIONS *15*

8.8.3 SPURIOUS EMISSIONS 9kHz – 30MHz *16*

8.8.4 SPURIOUS EMISSIONS ABOVE 30MHz *17*

8.3 POWERLINE CONDUCTED EMISSIONS *18-19*

APPENDIX SETUP PHOTOS ***20-21***

1. TEST REPORT CERTIFICATION

Applicant	：	PRESIDENT INDUSTRY DEVULOPMENT(SHENZHEN) CO., LTD.
Address	：	Bu Long road,Shang Tang village,Long Hua Street, Bao An, Shen Zhen City
Equipment Under Test	：	easy key
Model	：	GSK01
Tested Date	：	May 17 ~ 23, 2006

APPLICABLE STANDARD	
STANDARD	**TEST RESULT**
FCC Part 15 Subpart C: 2004 AND ANSI C63.4:2003	No non-compliance noted

Approved by:

C. F. Wu
Manager of Hsinchu Laboratory
Compliance Certification Services Inc.

Reviewed by:

Alan Pan
Test Engineer of Hsinchu Laboratory
Compliance Certification Services Inc.

WE HEREBY CERTIFY THAT: The measurements shown in the attachment were made in accordance with the procedures indicated, and the energy emitted by the equipment was found to be within the limits applicable. We assume full responsibility for the accuracy and completeness of these measurements and vouch for the qualifications of all persons taking them.

2. EUT DESCRIPTION

2.1 DESCRIPTION OF EUT & POWER

Product Name	easy key
Model Number	GSK01
Operating Frequency	125kHz
Channel Number	1 Channels
Modulation Technique	FSK
Antenna Type	Monopole Antenna, Antenna Gain : 0dBi
Power Source	36VDC (Powered by batteries)

Remark : *For more details, please refer to the User's manual of the EUT.*

3. DESCRIPTION OF TEST MODES

The EUT had been tested under operating condition.

There are one channels have been tested as following :

Frequency (kHz)
125

4. TEST METHODOLOGY

The tests documented in this report were performed in accordance with ANSI C63.4 and FCC CRF 47 2.1046, 2046, 2.1047, 2.1049, 2.1051, 2.1053, 2.1055, 2.1057, 15.207, 15.209.

5. FACILITIES AND ACCREDITATIONS

5.1 FACILITIES

All measurement facilities used to collect the measurement data are located at Rm.258, Bldg.17, NO.195 , Sec. 4, Chung Hsing Rd., Chu-Tung Chen. Hsin-Chu, Taiwan 310 R.O.C.
The sites are constructed in conformance with the requirements of ANSI C63.7, ANSI C63.4 and CISPR Publication 22.

5.2 EQUIPMENT

Radiated emissions are measured with one or more of the following types of linearly polarized antennas: tuned dipole, biconical, log periodic, bi-log, and/or ridged waveguide, horn. Spectrum analyzers with preselectors and quasi-peak detectors are used to perform radiated measurements.
Conducted emissions are measured with Line Impedance Stabilization Networks and EMI Test Receivers.
Calibrated wideband preamplifiers, coaxial cables, and coaxial attenuators are also used for making measurements.
All receiving equipment conforms to CISPR Publication 16-1, “Radio Interference Measuring Apparatus and Measurement Methods.”

5.3 LABORATORY ACCREDITATIONS LISTINGS

The test facilities used to perform radiated and conducted emissions tests are accredited by National Voluntary Laboratory Accreditation Program for the specific scope of accreditation under Lab Code: 200118-0 to perform Electromagnetic Interference tests according to FCC PART 15 AND CISPR 22 requirements. No part of this report may be used to claim or imply product endorsement by NVLAP or any agency of the US Government. In addition, the test facilities are listed with Federal Communications Commission (registration no: 90585 and 90584).

5.4 TABLE OF ACCREDITATIONS AND LISTINGS

Country	Agency	Scope of Accreditation	Logo
USA	NVLAP	EN 55014-1, AS/NZS 1044, CNS 13783-1, IEC/CISPR 14-1, IEC/CISPR 22, EN 55022, EN 61000-3-2, EN 61000-3-3, ANSI C63.4, AS/NZS CISPR 22, AS/NZS 3548, IEC 61000-4-2/3/4/5/6/8/11	NVLAP 200118-0
USA	FCC	3/10 meter Open Area Test Sites to perform FCC Part 15/18 measurements	FCC 90585, 90584
Japan	VCCI	3/10 meter Open Area Test Sites to perform conducted/radiated measurements	VCCI R-1229/1189 C-1250/1294
Taiwan	CNLA	FCC Method-47 CFR Part 15 Subpart C,D,E CISPR 11, FCC METHOD-47 CFR Part 18, EN 55011, CNS 13803, CISPR 13, CNS 13439, FCC Method-47 CFR Part 15 Subpart B, CISPR 14-1, EN 55014-1, CNS 13783-1, EN 55015, CNS 14115, CISPR 22, EN 55022, VCCI CNS 13438, EN 61000-4-2/3/4/5/6/8/11	TAF Testing Laboratory 0240
Taiwan	BSMI	CNS 13803, CNS 13438, CNS 13439, CNS 13783-1, CNS 14115	商檢 SL2-IS-E-0002 SL2-IN-E-0002 SL2-A1-E-0002 SL2-R1-E-0002 SL2-R2-E-0002 SL2-L1-E-0002
Canada	Industry Canada	RSS212, Issue 1	Canada IC 4417-1

** No part of this report may be used to claim or imply product endorsement by NVLAP or any agency of the US Government.*

6. CALIBRATION AND UNCERTAINTY

6.1 MEASURING INSTRUMENT CALIBRATION

The measuring equipment utilized to perform the tests documented in this report has been calibrated in accordance with the manufacturer's recommendations, and is traceable to recognized national standards.

6.2 MEASUREMENT UNCERTAINTY

Where relevant, the following measurement uncertainty levels have been estimated for tests performed on the apparatus:

PARAMETER	UNCERTAINTY
Radiated Emission, below 1 GHz	+/- 3.2 dB
Radiated Emission, 1 to 26.5 GHz	+/- 3.2 dB
Power Line Conducted Emission	+/- 2.1 dB

Uncertainty figures are valid to a confidence level of 95%

7. SETUP OF EQUIPMENT UNDER TEST

SUPPORT EQUIPMENT

N/A

SETUP DIAGRAM FOR TESTS

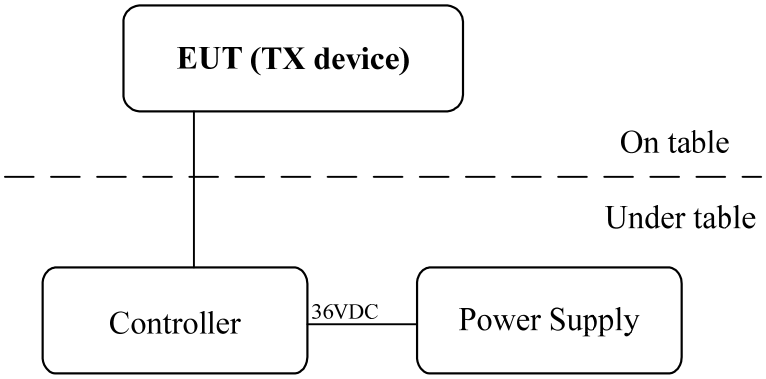

EUT OPERATING CONDITION

1. EUT power on.
2. RF signal transmits continuously.
3. Start test.

8. APPLICABLE LIMITS AND TEST RESULTS

8.1 26dB BANDWIDTH

LIMIT

N/A

TEST EQUIPMENTS

Description & Manufacturer	Model No.	Serial No.	Date of Calibration
ROHDE & SCHWARZ SPECTRUM ANALYZER	FSEK30	835253/002	September 24, 2005
AGILENT SPECTRUM ANALYZER	E4446A	MY433601.32	March 22, 2006

TEST SETUP

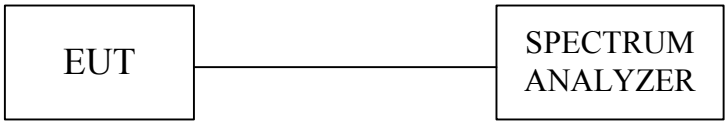

TEST PROCEDURE

1. Place the EUT on the table and set it in the transmitting mode.
2. Remove the antenna from the EUT and then connect a low loss RF cable from the antenna port to the spectrum analyzer.
3. Set the spectrum analyzer as RBW ＝ 1kHz, VBW ≧ RBW, Spam ＞ 20dB bandwidth, Sweep = auto.
4. Mark the peak frequency and 20dB (upper and lower) frequency.
5. Repeat until all the rest channels are investigated.

TEST RESULTS

No non-compliance noted

20dB BANDWIDTH

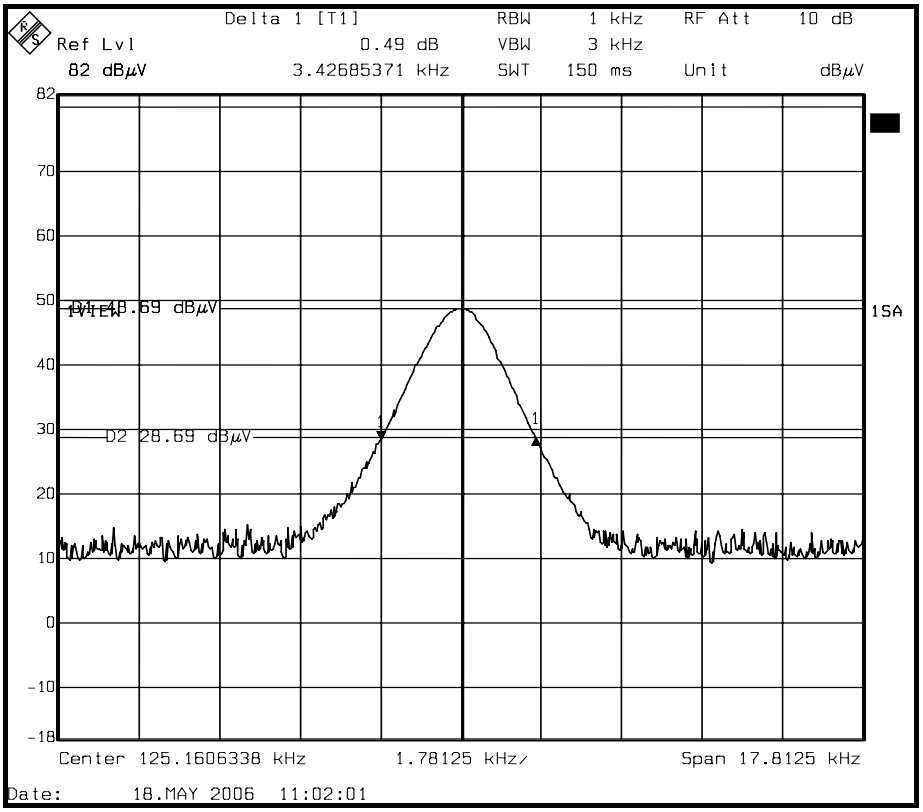

8.2 RADIATED EMISSIONS

8.8.1 TRANSMITTER RADIATED SUPURIOUS EMSSIONS

LIMITS

§ 15.205 (a) Except as shown in paragraph (d) of this section, only spurious emissions are permitted in any of the frequency bands listed below:

MHz	MHz	MHz	GHz
0.090 - 0.110	16.42 - 16.423	399.9 - 410	4.5 - 5.15
[1]0.495 - 0.505	16.69475 - 16.69525	608 - 614	5.35 - 5.46
2.1735 - 2.1905	16.80425 - 16.80475	960 - 1240	7.25 - 7.75
4.125 - 4.128	25.5 - 25.67	1300 - 1427	8.025 - 8.5
4.17725 - 4.17775	37.5 - 38.25	1435 - 1626.5	9.0 - 9.2
4.20725 - 4.20775	73 - 74.6	1645.5 - 1646.5	9.3 - 9.5
6.215 - 6.218	74.8 - 75.2	1660 -1710	10.6 -12.7
6.26775 - 6.26825	108 -121.94	1718.8 - 1722.2	13.25 -13.4
6.31175 - 6.31225	123 - 138	2200 - 2300	14.47 – 14.5
8.291 - 8.294	149.9 - 150.05	2310 - 2390	15.35 -16.2
8.362 - 8.366	156.52475 - 156.52525	2483.5 - 2500	17.7 - 21.4
8.37625 - 8.38675	156.7 - 156.9	2655 - 2900	22.01 - 23.12
8.41425 - 8.41475	162.0125 - 167.17	3260 - 3267	23.6 - 24.0
12.29 - 12.293	167.72 - 173.2	3332 - 3339	31.2 - 31.8
12.51975 - 12.52025	240 - 285	3345.8 - 3338	36.43 - 36.5
12.57675 - 12.57725	322 -335.4	3600 - 4400	([2])
13.36 - 13.41			

[1] Until February 1, 1999, this restricted band shall be 0.490-0.510 MHz.

[2] Above 38.6

§ 15.205 (b) Except as provided in paragraphs (d) and (e), the field strength of emissions appearing within these frequency bands shall not exceed the limits shown is Section 15.209. At frequencies equal to or less than 1000 MHz, compliance with the limits in Section 15.209 shall be demonstrated using measurement instrumentation employing a CISPR quasi-peak detector. Above 1000 MHz, compliance with the emission limits in Section 15.209 shall be demonstrated based on the average value of the measured emissions. The provisions in Section 15.35 apply to these measurements.

§ 15.209 (a) Except as provided elsewhere in this Subpart, the emissions from an intentional radiator shall not exceed the field strength levels specified in the following table :

Frequency (MHz)	Field Strength (microvolts/meter)	Measurement Distance (meters)
0.009 - 0.490	2400 / F (kHz)	300
0.490 – 1.705	24000 / F (kHz)	30
1.705 – 30.0	30	30
30 - 88	100 **	3
88 - 216	150 **	3
216 - 960	200 **	3
Above 960	500	3

** Except as provided in paragraph (g), fundamental emissions from intentional radiators operating under this Section shall not be located in the frequency bands 54-72 MHz, 76-88 MHz, 174-216 MHz or 470-806 MHz, However, operation within these frequency bands is permitted under other sections of this Part, e-g, Sections 15.231 and 15.241.

§ 15.209 (b) In the emission table above, the tighter limit applies at the band edges.

TEST EQUIPMENTS

The following test equipments are utilized in making the measurements contained in this report.

Manufacturer or Type	Model No.	Serial No.	Date of Calibration	Calibration Period	Remark
CHASE BI-LOG ANTENNA	CBL6112B	2696	March 22, 2006	1 Year	FINAL
R/S SPECTRUM ANALYZER	FSEK30	835253/002	September 24, 2005	1 Year	FINAL
AGILENT SPECTRUM ANALYZER	E4446A	MY433601.32	March 22, 2006	1 Year	FINAL
R/S EMI TEST RECEIVER	ESCS 30	826547/004	June 15, 2005	1 Year	FINAL
OPEN SITE	----------	No.1	May 07, 2006	1 Year	FINAL
N TYPE COAXIAL CABLE	9913-30M	----------	July 28, 2005	1 Year	FINAL
Horn Antenna	AH-118	10089	August 10, 2005	1 Year	FINAL
Horn Antenna	AH-840	03077	February 25, 2006	1 Year	FINAL
Agilent Pre-amplifier	8449B	3008A01471	December 07, 2005	1 Year	FINAL
HP Amplifier	8447D	1937A02748	December 07, 2005	1 Year	FINAL
HP High pass filter	84300/80038	002	CAL. ON USE	1 Year	FINAL
HP High pass filter	84300/80039	003	CAL. ON USE	1 Year	FINAL
Loop Antenna ETS-LINDGREN	6502	2356	June 15, 2005	1 Year	FINAL

TEST SETUP

9kHz ~ 30MHz

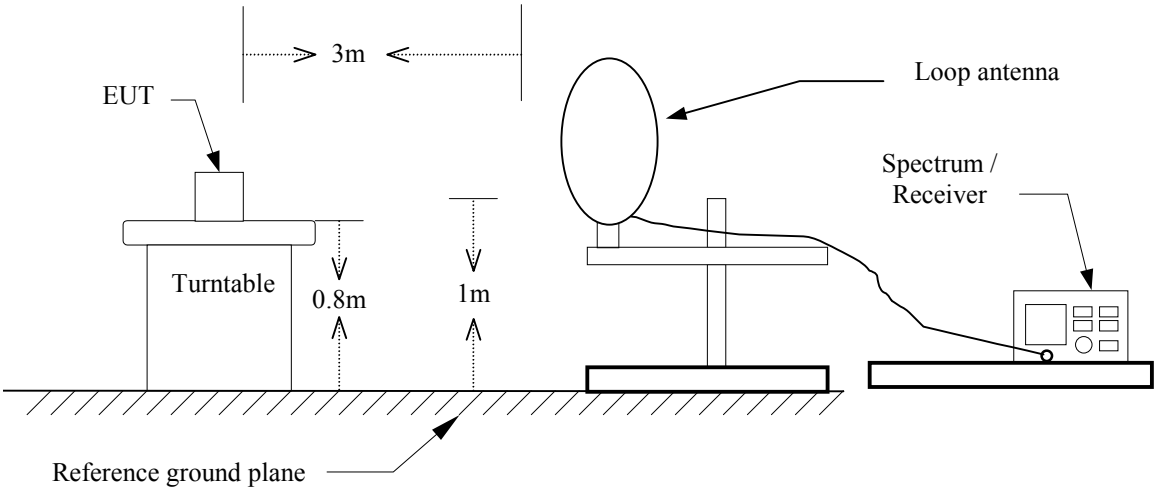

The diagram below shows the test setup that is utilized to make the measurements for emission above 30MHz.

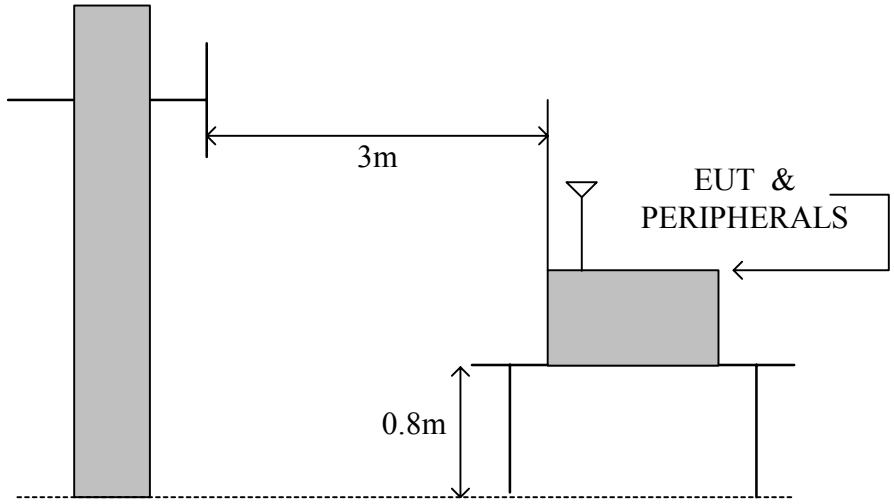

TEST PROCEDURE

a. The EUT was placed on the top of a rotating table 0.8 meters above the ground at a 10 meter open area test site. The table was rotated 360 degrees to determine the position of the highest radiation.

b. The EUT was set 3 meters away from the interference-receiving antenna, which was mounted on the top of a variable-height antenna tower.

c. The antenna is a broadband antenna, and its height is varied from one meter to four meters above the ground to determine the maximum value of the field strength. Both horizontal and vertical polarization of the antenna are set to make the measurement.

d. For each suspected emission, the EUT was arranged to its worst case and then the antenna was tuned to heights from 1 meter to 4 meters and the table was turned from 0 degrees to 360 degrees to find the maximum reading.

e. The test-receiver system was set to Peak or CISPR quasi-peak Detect Function and Specified Bandwidth with Maximum Hold Mode.

f. If the emission level of the EUT in peak mode was 10 dB lower than the limit specified, then testing could be stopped and the peak values of the EUT would be reported. Otherwise the emissions that did not have 10 dB margin would be re-tested one by one using peak, quasi-peak or average method as specified and then reported in a data sheet.

Note：

Frequency Range	Receiver / Spectrum RBW Setting
9kHz ~ 150kHz	200Hz
150kHz ~ 30MHz	9kHz
30MHz ~ 1000MHz	120kHz

TEST RESULTS

No non-compliance noted

8.8.2 FIELD STRENGTH OF FUNDAMENTAL EMISSIONS

Product Name	easy key	**Test Date**	2006/05/18
Model	GSK01	**Test By**	Alan Fan
Test Mode	TX	**TEMP & Humidity**	26.5°C, 58%

Frequency (MHz)	Correct Factor (dB)	Meter Reading at 3m(dBμV)	Limits at 3m (dBμV/m)	Emission Level at 3m(dBμV/m)	Detector
		LOOP		LOOP	PK/AVG/QP
0.125	11.60	75.90	105.66	87.50	PK
0.125	11.60	75.80	105.66	87.40	AVG
0.125	11.60	75.80	105.66	87.40	QP

Remark: *Emission level (dBμV/m) =Correct Factor (dB) + Meter Reading (dBμV).*

8.8.3 SPURIOUS EMISSIONS 9kHz – 30MHz

Product Name	easy key	**Test Date**	2006/05/18
Model	GSK01	**Test By**	Alan Fan
Test Mode	125kHz TX	**TEMP & Humidity**	26.5°C, 58%

Frequency (MHz)	Correct Factor (dB)	Meter Reading at 3m(dBμV)	Limits at 3m (dBμV/m)	Emission Level at 3m(dBμV/m)	Detector
		LOOP		LOOP	PK/AVG/QP
0.250	11.40	54.40	99.65	65.80	PK
0.375	11.40	51.80	96.12	63.20	PK
0.500	11.40	47.20	73.62	58.60	PK
0.625	11.40	43.90	71.69	55.30	PK
0.750	11.40	42.90	70.10	54.30	PK
0.875	11.40	42.20	68.76	53.60	PK
1.000	11.40	38.90	67.60	50.30	PK
1.125	11.40	39.90	66.58	51.30	PK
1.250	11.40	40.30	65.67	51.70	PK
1.375	11.40	38.70	64.84	50.10	PK
1.625	11.40	41.00	63.39	52.40	PK
1.875	11.40	43.00	69.50	54.40	PK
2.000	11.40	42.00	69.50	53.40	PK
2.250	11.40	41.20	69.50	52.60	PK

Remark: *Emission level (dBμV/m) =Correct Factor (dB) + Meter Reading (dBμV).*

8.8.4 SPURIOUS EMISSIONS ABOVE 30MHz

Product Name	easy key	Test Date	2006/05/18
Model	GSK01	Test By	Alan Fan
Test Mode	125kHz TX	TEMP & Humidity	26.5°C, 58%

Frequency (MHz)	Antenna Factor (dB/m)	Cable Loss (dB)	Meter Reading at 3m(dBμV)		Limits (dBμV/m)	Emission Level at 3m(dBμV/m)	
			Horizontal	Vertical		Horizontal	Vertical
46.06	11.19	0.96	10.80	21.80	40.00	22.95	33.95
60.60	7.30	1.08	19.50	25.50	40.00	27.88	33.88
193.00	10.89	1.79	5.30	4.50	43.50	17.98	17.18
233.45	12.47	1.96	3.20	4.30	46.00	17.63	18.73
319.98	14.76	2.27	6.80	7.90	46.00	23.83	24.93
352.00	15.66	2.39	2.10	3.80	46.00	20.14	21.84
399.99	17.00	2.57	9.30	9.10	46.00	28.87	28.67

Remark: *Emission level (dBμV/m) =Antenna Factor (dB/m) + Cable loss (dB) + Meter Reading (dBμV).*

8.3 POWERLINE CONDUCTED EMISSIONS

LIMITS

§ 15.207 (a) Except as shown in paragraph (b) and (c) this section, for an intentional radiator that is designed to be connected to the public utility (AC) power line, the radio frequency voltage that is conducted back onto the AC power line on any frequency or frequencies within the band 150 kHz to 30 MHz shall not exceed the limits in the following table, as measured using a 50 µH/50 ohms line impedance stabilization network (LISN). Compliance with the provisions of this paragraph shall be based on the measurement of the radio frequency voltage between each power line and ground at the power terminal.

The lower limit applies at the boundary between the frequency ranges.

Frequency of Emission (MHz)	Conducted limit (dBµv)	
	Quasi-peak	Average
0.15 - 0.5	66 to 56	56 to 46
0.5 - 5	56	46
5 - 30	60	50

TEST EQUIPMENTS

The following test equipments are used during the conducted powerline tests：

Manufacturer or Type	Model No.	Serial No.	Date of Calibration	Calibration Period	Remark
HP SPECTRUM ANALYZER	8594E	3801A05627	April 28, 2006	1 Year	PRETEST
SOLAR ISOLATION TRANSFORMER	7032-1	N/A	N/A	N/A	FINAL
EMCO L.I.S.N.	3850/2	9311-1025	January 16, 2006	1 Year	FINAL
CHASE L.I.S.N	NNLK 8129	8129118	January 16, 2006	1 Year	FINAL
R & S TEST RECEIVER	ESHS30	838550/003	February 27, 2006	1 Year	FINAL
KEENE SHIELDED ROOM	5983	No.1	N/A	N/A	FINAL
R & S PULSE LIMIT	EHS3Z2	357.8810.52	July 10, 2005	1 Year	FINAL
N TYPE COAXIAL CABLE	---------	----------	July 10, 2005	1 Year	FINAL
50Ω TERMINATOR	---------	----------	July 10, 2005	1 Year	FINAL

TEST SETUP

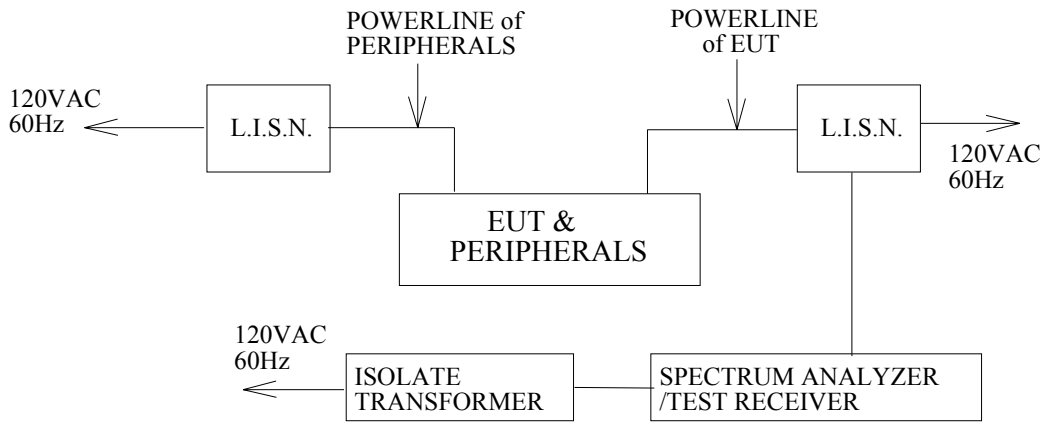

TEST PROCEDURE

The EUT is placed on a non-conducting table 40 cm from the vertical ground plane and 80cm above the horizontal ground plane. The EUT IS CONFIGURED IN ACCORDANCE WITH ANSI C63.4.
The resolution bandwidth is set to 9 kHz for both quasi-peak detection and average detection measurements.
Line conducted data is recorded for both NEUTRAL and LINE.

TEST RESULTS

No non-compliance noted

Sine this EUT is powered by DC Source, this test item is not applicable.