RAIFU TECHNOLOGY®

HARDWARE SETUP GUIDE

RFS2212/2214

V1.0

Legal Notices

Copyright © 2004 RAIFU Intelligent Technology Corporation. All rights reserved.
RAIFU Intelligent Technology Corporation has intellectual property rights relating to technology embodied in the products described in this document, including without limitation certain patents or patent pending applications in the China or other countries.
This document and the products to which it pertains are distributed under licenses restricting their use, copying, distribution and decompilation. No part of this product documentation may be reproduced in any form or by any means without the prior written consent of RAIFU Intelligent Technology Corporation and its licensors, if any. Third party software is copyrighted and licensed from Licensors. RAIFU, RAIFU Technology, the RAIFU logo, Nanoblock, Fluidic Self Assembly, Squiggle, Nanoscanner and other graphics, logos, and service names used in this document are trademarks of RAIFU Intelligent Technology Corporation in the China and other countries. All other trademarks are the property of their respective owners. China Government approval required when exporting the product described in this documentation.

Changes or modifications not expressly approved by the party responsible for compliance could void the user's authority to operate the equipment.

RF Exposure warning:

The prediction safety distance is 30cm. Only in the space of the distance more than 30cm, the exposed RF energy level is less than the level of the Commission’s guidelines.

Contents

1.1 Audience 4
1.2 RFID Reader Overview 4
1.3 Requirements 4
1.4 Specifications 5
Name 5
2.1 Receiving the RFID Reader 9
2.4 Installation 14
2.5 System Operation: Software Control 17

CHAPTER 1

Introduction

This *Hardware Setup Guide* provides instructions for installing and operating the RFS2212/2214 RFID Readers. This document is designed for use by RFID system integrators and software developer - those who wish to develop software products and extended systems that take full advantage of the RFID Reader's capabilities.

1.1 Audience

For the purposes of this document, we assume the readers of the *Hardware Setup Guide*:
• are competent PC users
• have minimal previous knowledge of radio-frequency identification technology
• are experienced in software development and/or hardware systems integration

1.2 RFID Reader Overview

The RAIFU RFID reader is designed to read and programEPC C1G2tags and issue event reports to a host computer system. The host computer can be locally connected to the reader via RS-232. The RFID Reader is delivered with the following components and accessories:
• RFID Reader
• one RS-232 serial cable (for host computer)
• power supply
• documentation on CD-ROM
• Panel Antenna

1.3 Requirements

To interface with the RFID Reader you will need the following:
• a PC running Windows 98 or higher, with CD-ROM drive and an available
• RS-232 serial port
• standard 110~220 VAC power
• host software (Raifu demo software or your own custom software)
• RFID Tags (EPC C1G2 compliant)
• external antenna(s) and coaxial cable(s)

• standard power cord (desired length) with grounded, 3-pronged plugs

1.4 Specifications

Specifications for key components of the RFID Reader system are provided in the tables below:

1.4.1 RFID Reader

Name	RAIFU Multi-Port General Purpose RFID Reader
Part Number	RFS 2212/2214
Frequency	902.6 ~ 927.4 MHz
Hopping Channels	63
Channel Spacing	400 KHz
Channel Dwell Time	< 0.4 Seconds
RF Transmitter	20~ 30dBm at the end of 3m cable.
Modulation Method	ASK
Power Consumption	15 Watts
Communications Interface	RS-232, RS485
Inputs/Outputs	2 Weigand port,2 Trigger input,2 relay switch,2 com port, power
Antenna Port	2 coax antenna (RFS2212), 4 coax antenna (RFS2214)
Dimensions	(L) 21 cm (8.2 in) x (W) 20 cm (7.9 in) x (D) 5 cm (2 in)
Weight	Approximately 1.5 kg
Operating Temperature	0°C to +50°C (+32 °F to +122°F)

Panel Antenna

Product Number: RFA-900E

●Electrical Specifications:

Frequency Range:	902MHz～928MHz
Polarization:	Circular
Horizontal 3dB Beamwidth:	62°
Vertical 3dB Beamwidth:	65°
Gain:	5.75dBi
VSWR	<1.3
Input Impedance:	50Ω
Connector:	SMA
Maximum Input Power:	<200W
Lightning Protection:	Direct Ground

●Mechanical Specifications:

Dimensions (L×W×H):	280x200x75(mm)
Weight of Antenna:	2 kg
Radome Material:	UPVC

1.4.2 Mechanical

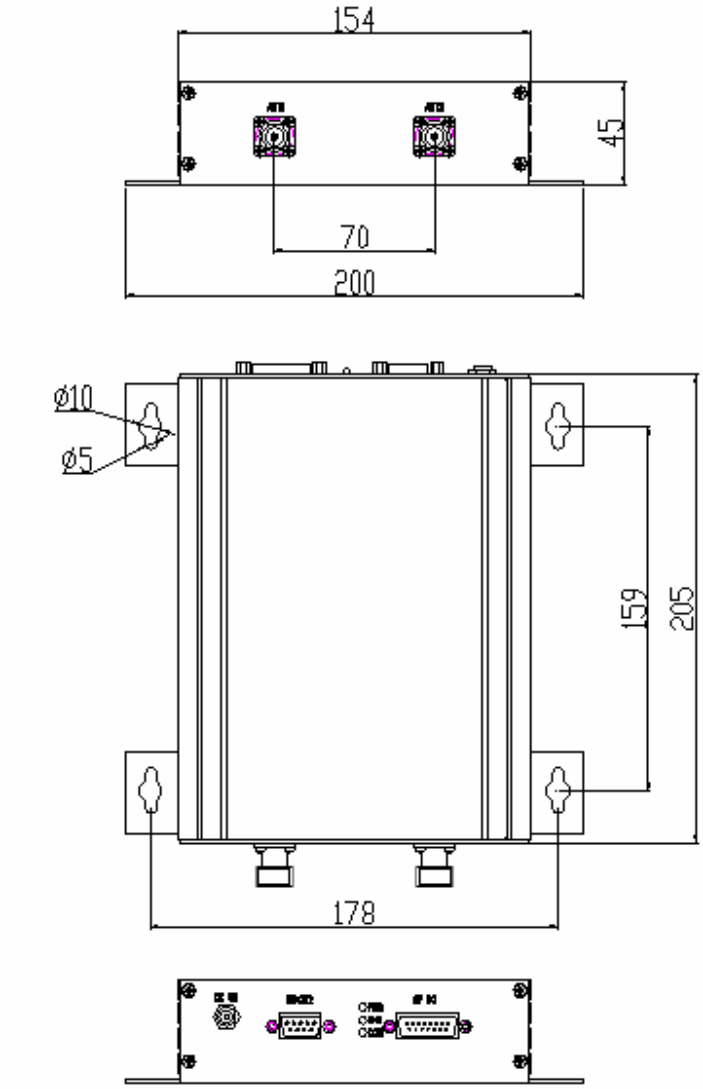

Figure 1.1 - Outline Drawing of the RFS-2212

1.4.3 RS-232 Port Pinouts

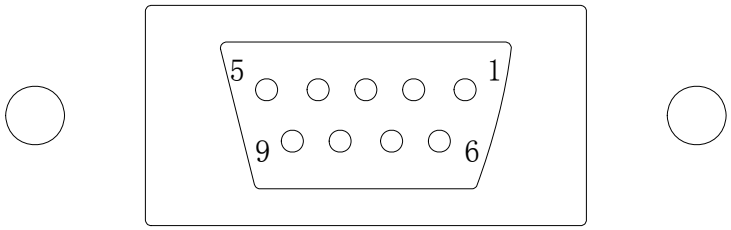

RS232 CONNECTOR (FEMALE) – LOOKING AT READER

RS232 PORT CONNECTOR (FAMEL DB-9F)	
Pin 1	Not Connected
Pin 2	TR1 Transmit Data (Output)
Pin 3	RC1 Receive Data (Input)
Pin 4	Not Connected
Pin 5	Ground
Pin 6	Not Connected
Pin 7	Not Connected
Pin 8	Not Connected
Pin 9	Not Connected

1.4.4 I/O Port Connector Pinouts

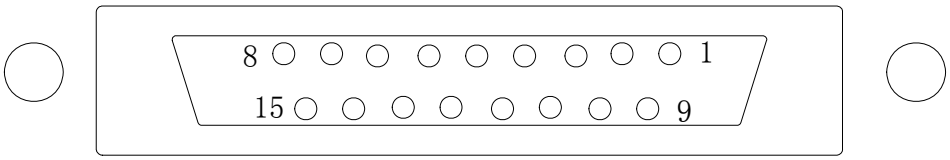

I/O PORT CONNECTOR (FEMALE) – LOOKING AT READER

15-pin D female I/O connector(Female DB-15F)	
Pin1	RS485-
Pin2	RS485+
Pin3	W2-1:Weigand port 2 Data-1
Pin4	W2-0:Weigand port 2 Data-0
Pin5	FIN2: Trigger input 2
Pin6	FIN1: Trigger input 1

Pin7	W1-1:Weigand port 1 Data-1
Pin8	W1-0:Weigand port 1 Data-0
Pin9	GDQ1-2: Relay 1 connect point 2
Pin10	GDQ1-1: Relay 1 connect point 1
Pin11	GDQ2-2: Relay 2 connect point 2
Pin12	GDQ2-1: Relay 2 connect point 1
Pin13	
Pin14	
Pin15	GND: Ground

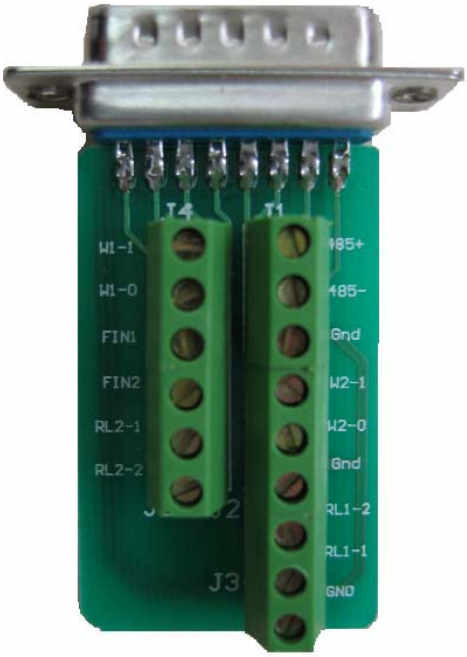

Figure 1.2 – the circuit board of I/O Port Connector

CHAPTER 2

Reader Hardware Installation and Operation

This chapter describes the RFID Reader and provides installation and operation information.

2.1 Receiving the RFID Reader

Your RFID Reader Kit is shipped with the items listed below. Please verify the contents of your received shipment before assembling.

- RFID Reader
- RS-232 reader-to-PC cable
- reader power supply and cables
- I/O port board
- CD-ROM containing demonstration software, user guides and documentation
- Panel antenna

Figure 2.1 - RFS-2212 Kit

Figure 2.2 - Antenna

2.1.1 Reader I/O Panel

The I/O panel (shown below) houses the following:

- power connector
- 9-pin D female RS-232 serial port
- 3 Diagnostic LEDs (RS232 Communication, RF Power, Supply Power)
- 15-pin D female I/O connector

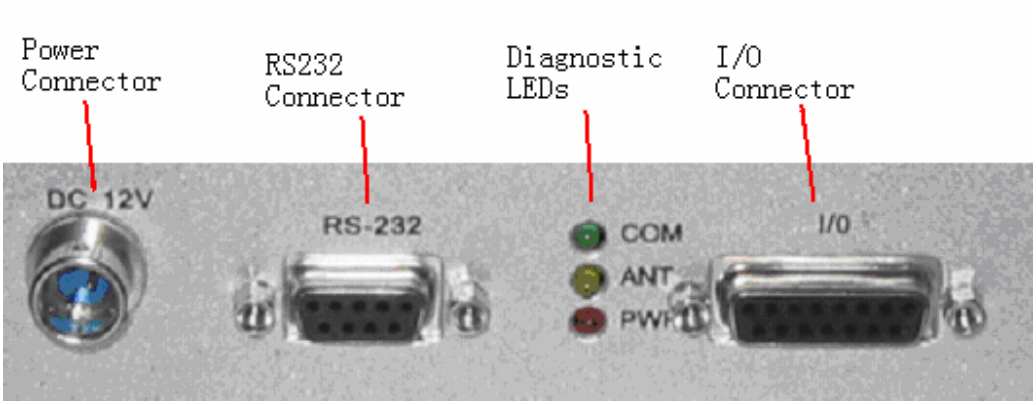

Figure 2.3 - Reader Connections and LEDs

2.1.2 Diagnostic LEDs

The diagnostic LEDs provide external indication of various conditions:
COM (green) - indicates that reader is communicating with a host

ANT (yellow) - indicates that RF is being emitted by the reader

PWR (red) - indicates power is applied to the reader

2.2 Antenna Panel

The antenna panel (opposite the reader's I/O panel) contains either two coax antenna connector ports as shown below. These are N type connectors.

Figure 2.4 - RFS2212 Antenna Connections

Figure2. 5 - RFS2214 Antenna Connections

2.3 System Assembly and Bench Test

Assembling the RFID Reader system is easy. We recommend you set up the system and verify its operation in a bench test configuration (shown below) before installing it in a production setting.

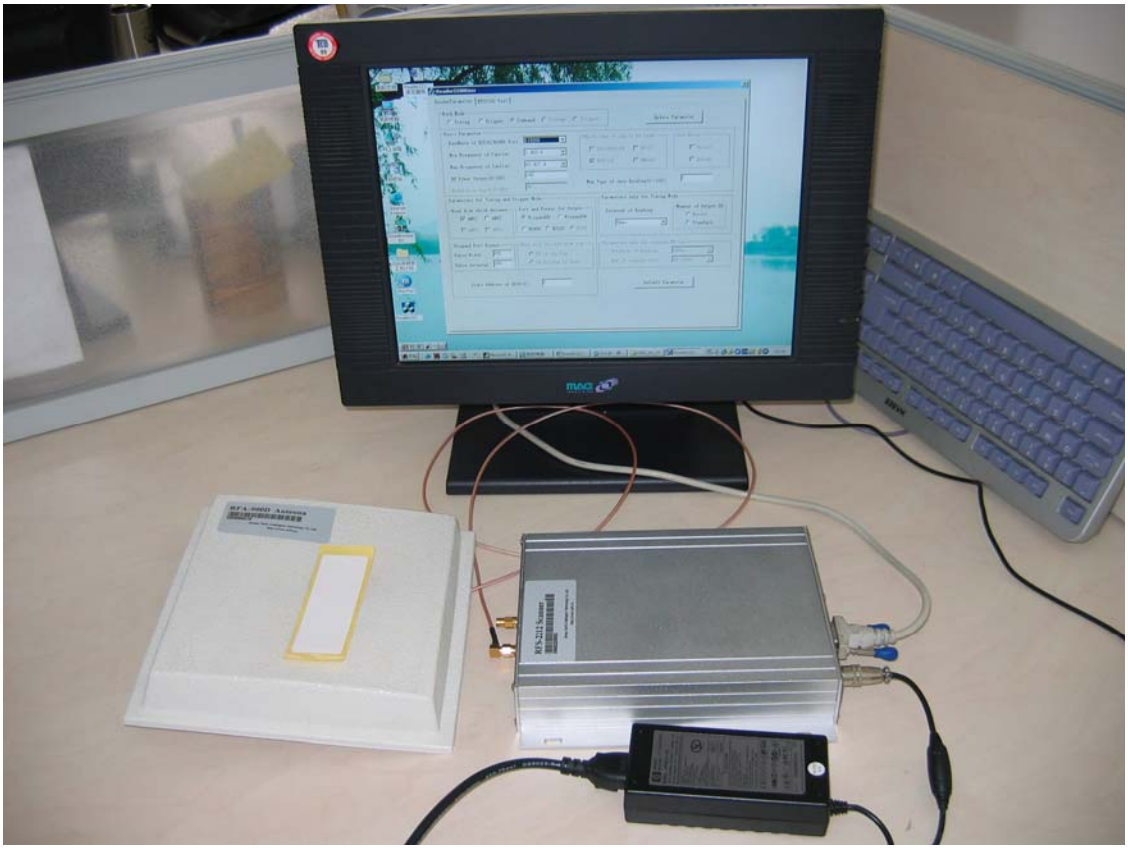

Figure 2.6 - Typical Bench Test Setup

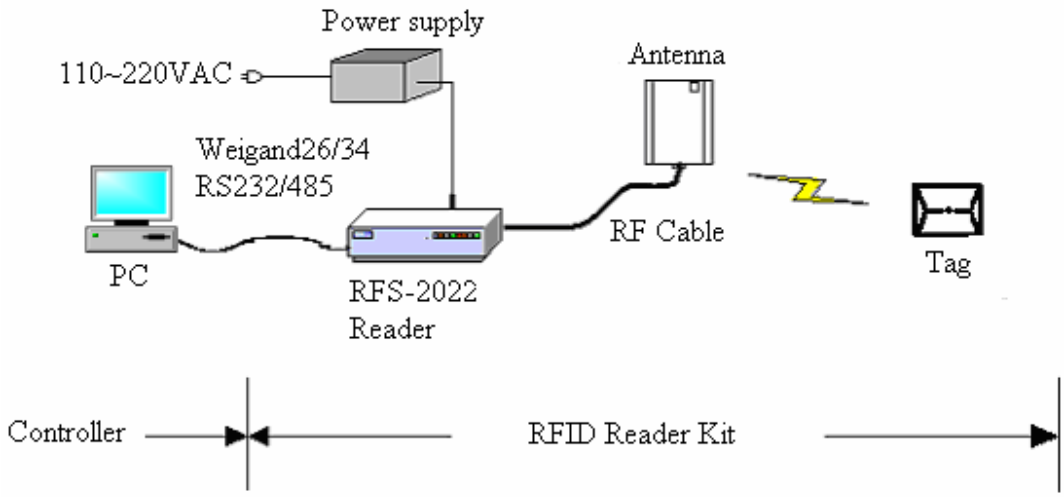

Figure 2.7 - Typical connection of Test

2.3.1 Bench Test Configuration

1) Situate the Reader on a tabletop

Ensure the following conditions:

• Two standard 220 VAC outlets are available nearby (one for the reader, one for the PC if needed).

Sufficient space is available on the tabletop for the PC, reader and antenna.

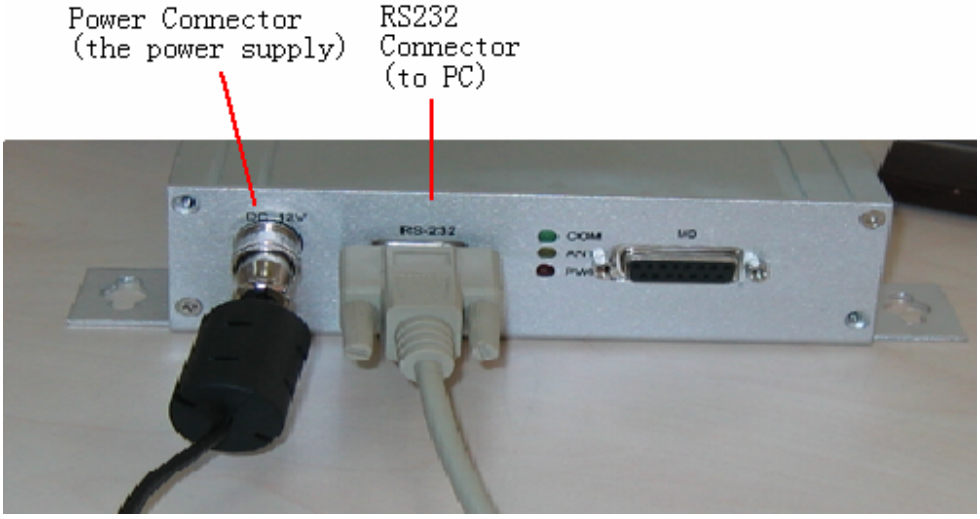

Figure 2.8 - RS-232 and Power Connections

2) Connect the RS-232 cable to the reader.

• Align the male cable connector so that its shape and pins match the shape and holes of the female DB-9 RS-232 port.

• Push the aligned connector into the port.

• Finger-tighten the screws to secure the cable/connector to the reader.

Figure 2.9 - RS-232 Connector

3) Connect the RS-232 cable to the serial port on the PC

4) Connect the power supply to the reader

Using the thin cable attached to power supply, push the connector into the port until it is securely seated. Do not plug the power supply into the wall outlet yet.

5) Connect the coaxial cable(s) to antenna port(s) (1-2)

• Antenna port 1 is on the right if viewing reader with flange side down. The RFS-2212 has two antenna ports.

• Align the coax cable's center pin and push into the port.

• Screw the fitting from the cable end onto the reader connector *clockwise* until finger-tight to secure the cable to the reader.

• Connect additional antennas to their respective ports and tighten fittings

clockwise until finger-tight.

6) Plug power cord into power supply
Use the female end of a standard 3-pronged power cord.

7) Plug the power supply cable into the wall outlet and verify power
The red LED will illuminate when power is on.

8) Plug in the PC (if necessary) and turn it on

9) Launch the desired host software application
• You may use Raifu's demo application software or custom software developed per the reader-host protocol for your specific application.
Y*ou are now ready to bench test or demonstrate the RFID Reader system.*

2.3.2 Bench Test Procedure

1) Access an operational mode suitable for bench testing.
• Select a mode that will allow multiple consecutive reads of a single tag.
• Refer to the applicable application software user guide for specific instructions.

2) Position the reader to you can see the LEDs
• You may also want to position the PC so you can view the monitor simultaneously for later tests.

3) Move a tag slowly into the antenna's range
• Begin with the tag well outside the expected range (~15-20 ft) and move it toward the antenna while listening the beep from the reader.

4) Verify the buzzer beeps when the tag is inside the read window.

5) Verify the host receives the tag data
• Refer to indications specified in applicable user guide to verify the tag was read successfully.

6) If bench test conditions are verified, proceed to installation

NOTE: To perform a hard reboot of the system, simply cycle power on the reader.

2.4 Installation

This section provides guidance for configuring components in your RFID

system.
You should consider the overall design of your specific system before permanently mounting the equipment.

Installation involves all the same connection steps required for bench test. However, instead of situating equipment on a tabletop, the reader, antenna, and their accessories are mounted in your application environment.

2.4.1 Requirements

Before installing your RFID Reader system, you will need the following:
• a PC running Windows 98 or higher, with CD-ROM drive (for demo application software) and one available RS-232 serial port
• standard 110~220 VAC power for the reader and PC
• host software
• (optional) extra antennas (if desired for additional coverage)
• additional RS-232 cables or antenna coax cables needed to accommodate routing requirements
• standard grounded, three-pronged power cord of desired length
• mounting hardware suitable for the surface to which equipment is to be attached (e.g., wood screws, moly-bolts, brackets, etc.)

Figure 2.10 - View of the Reader showing mounting holes

2.4.2 Hardware Installation Procedure

1) Select mounting position for antenna(s)

CAUTION: *Reader antennas should be positioned so that personnel in the area for prolonged periods may safely remain at least 23 cm (9 in) in an uncontrolled environment from the antenna's surface. See FCC OET Bulletin 56 "Hazards of radio frequency and electromagnetic fields" and Bulletin 65 "Human exposure to radio frequency electromagnetic fields."*

• Mount the antenna(s) at the periphery of the desired read window (either overhead or at the side), so that the position of the most distant tag passing through the window is no farther from the antenna than the maximum range specified for your system design.
• Position the antenna(s) at a height approximately midway between the highest and lowest expected tag position. (For example, a pallet tag may be the lowest tag position to be read, while the top-most case on a fully stacked pallet may represent your highest tag position.)
• If you are using two antennas, mount the second antenna in a mirror-image of the first antenna's position, unless otherwise indicated in your system design specification.
• **NOTE**: To maintain compliance with local regulations, use only antennas supplied with the unit.

2) Select mounting position for reader

• Reader should be positioned close enough to the antenna to accommodate the cable length without putting strain on the connectors.
• Be sure power is available at the selected reader location.

3) Select location for host PC or Controller

• Situate the host PC (or Controller) within 50 ft of the reader in a safe location away from vehicular and foot traffic.

4) Install reader

• Secure the reader through the two mounting holes on either flange to its mounting location (wall, post, mounting bracket) using appropriate hardware.
• If desired, position the reader so that the LEDs are easily observed.

5) Install antennas

• Secure each antenna through the mounting holes on either flange to its mounting location using appropriate hardware. The antenna could be monopole antenna, dome antenna, panel antenna or yagi antenna, the maximum gain of antenna is 6dBi. The antenna connectors are un-standard, please use antennas supplied by professional antenna manufacturer, and please make sure the antenna gain is less than 6dBi.

6) Connect antennas to reader

• Route coax cables from the antennas to the reader according to your system design specifications and secure them properly.
• Align the connector for each cable with the reader antenna port, push into the port, and finger-tighten the screw fitting.

7) Connect reader power
• Push the power supply connector into the reader port.
• Plug the female end of the power cord into the power supply.
• Plug the male end of the power cord into the 110~220 VAC outlet.

8) Connect reader to host PC or Controller
• Align the RS-232 connector with the corresponding serial port on the reader and push the connector onto the pins. Finger-tighten the screws to secure the cable to the reader.
• Align and connect the other end of the RS-232 with the serial port on the PC or Controller.

9) Connect power to the PC or Controller

2.5 System Operation: Software Control

The RFID Reader is controlled from software running on a host system that communicates with the reader using a text-based protocol. All applications use this protocol to communicate with the reader.

You may operate the reader from your own application code using this interface, use the example code provided on the Developer's Kit CD or use the Raifu RFID application software- a demonstration program also included on your Developer's Kit CD.

For details, refer to either the *Reader Interface Guide* or the *Demonstration Software Guide* described briefly below.

2.5.1 Reader Interface Guide

The text-based interface mentioned above is described in detail in the *Reader Interface Guide*. Using this interface, the reader can be configured to read ID of tags and data in tags, or write data to tags.

Tag data acquired in response to these triggers can be transmitted to the host in a number of formats (e.g., hex, ASCII).

If you are a software developer, the *Reader Interface Guide* provides the information you will need to connect to the reader from a host computer,

communicate with it, and customize its performance.

2.5.2 Demonstration Software Guide

The *Demonstration Software Guide* describes the installation and operation of the Raifu RFID application software.

The Raifu RFID application software is a useful demonstration program that allows users to explore the reader's functionality and build customizable demos with a user-friendly interface.

Using the application software, the various operating modes of the reader can be controlled.