APPENDIX 4 : Photographs of test setup

Photographs of EUT

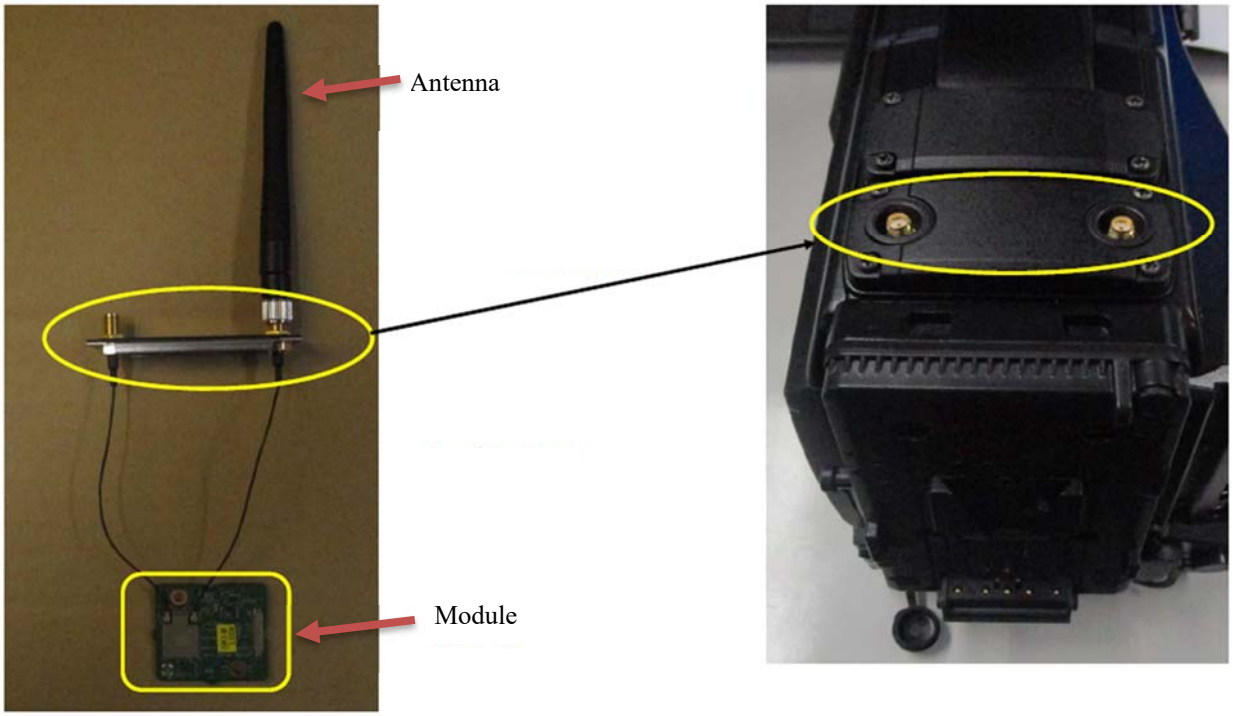

Photographs of host device

Front

Rear

Left

Right

Top

Bottom

Antenna position

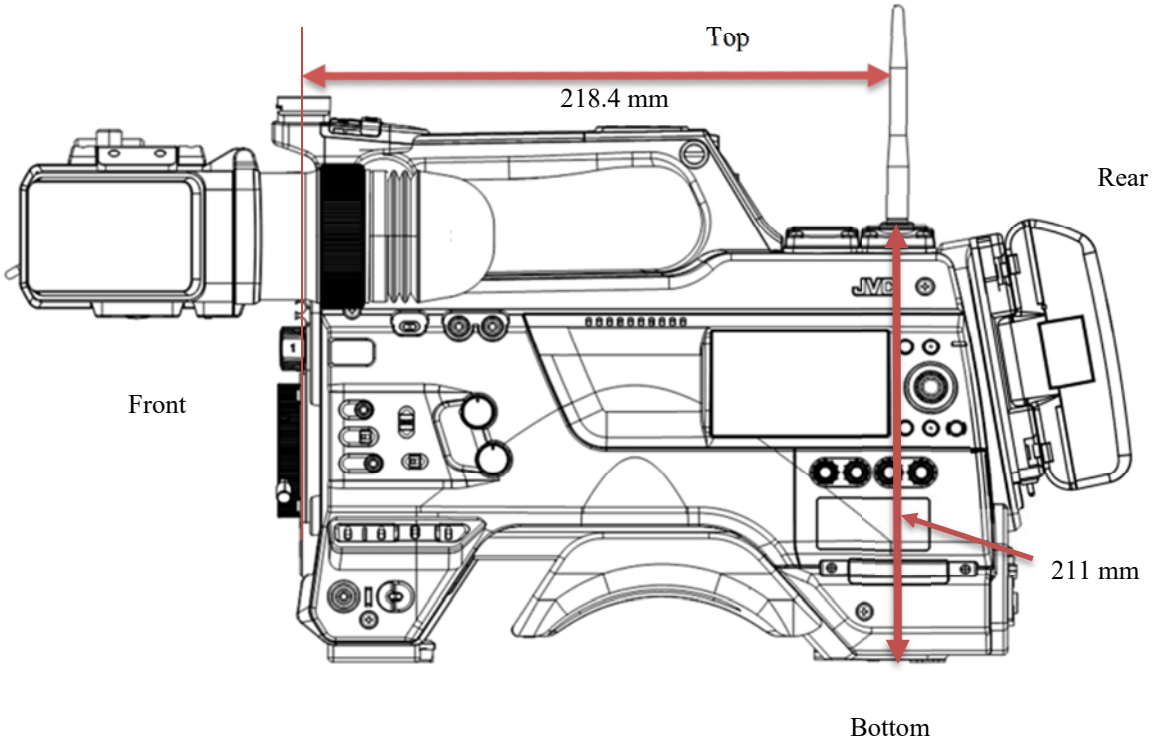

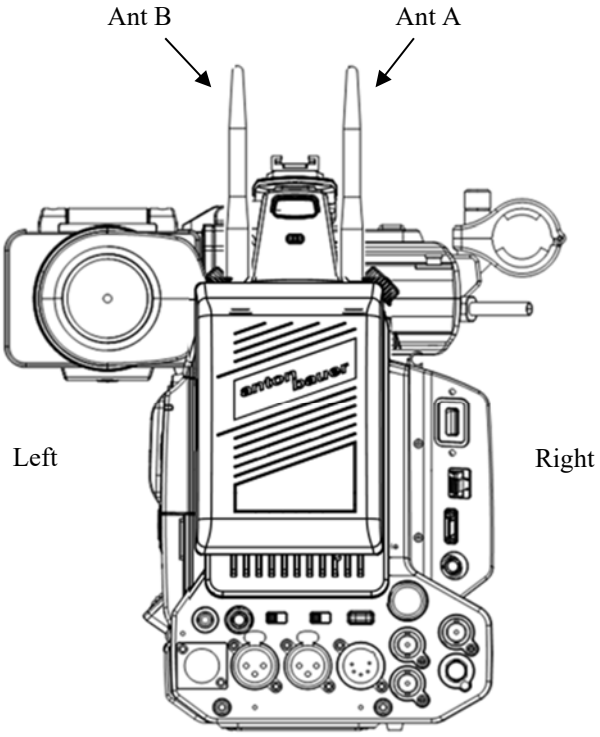

Battery

Rear Position for Test setup

<Battery model: Dionic HC>

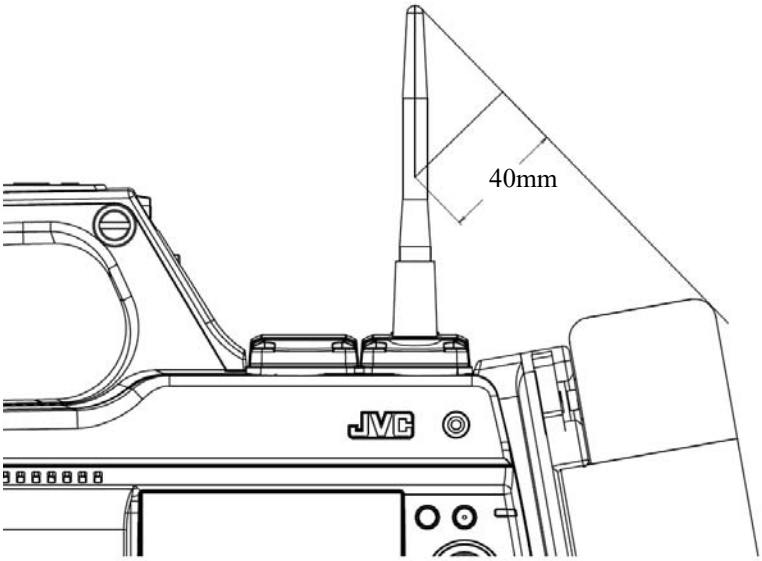

<Battery model: Digital 150>

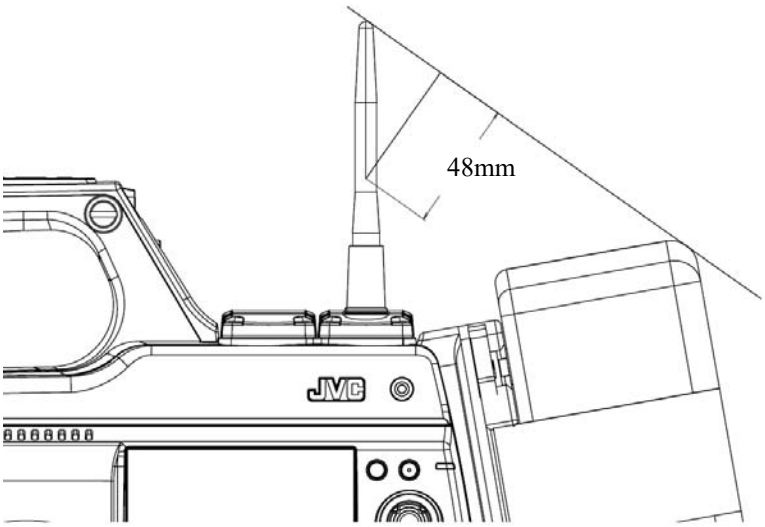

Left Position for Test setup

<Battery model: Dionic HC>

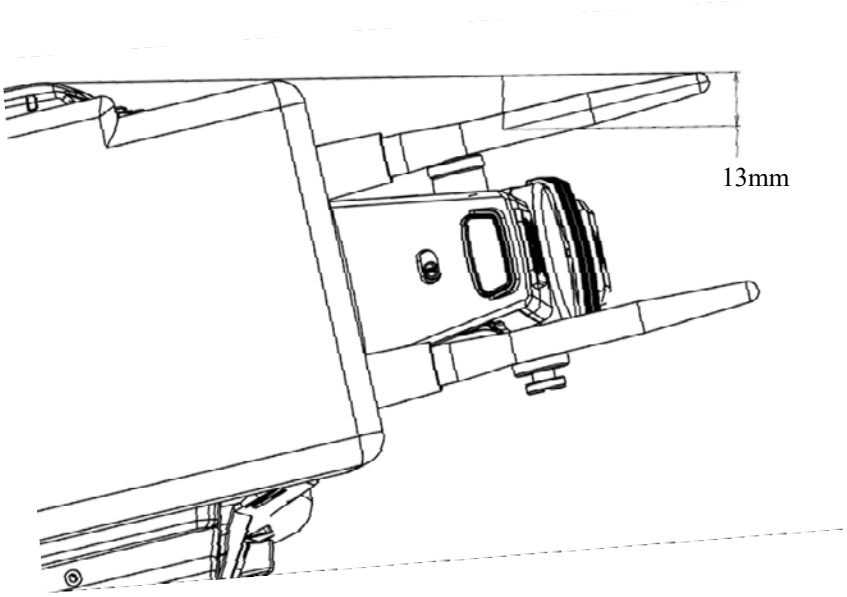

<Battery model: Digital 150>

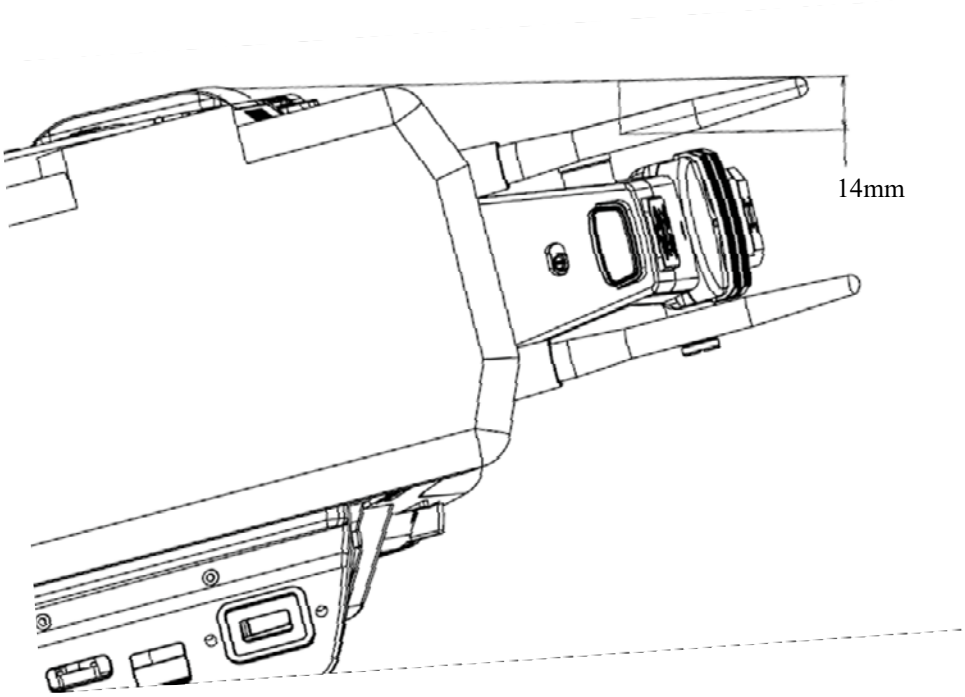

<Battery model: Dionic HC>

<Battery model: Digital 150>

Photographs of setup

Rear	Left
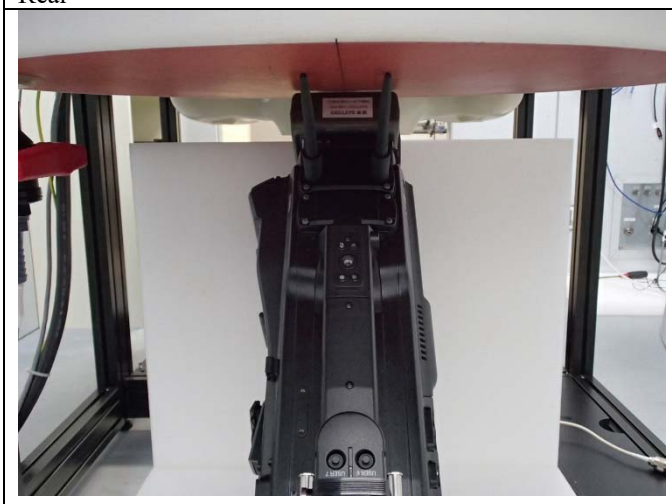	

Right	Top
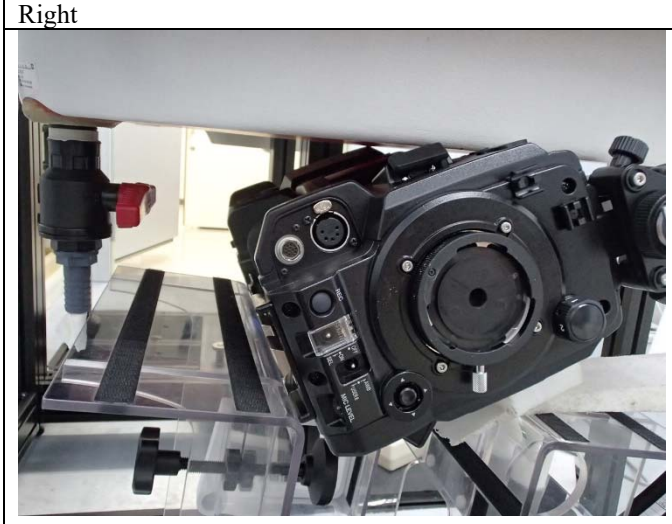	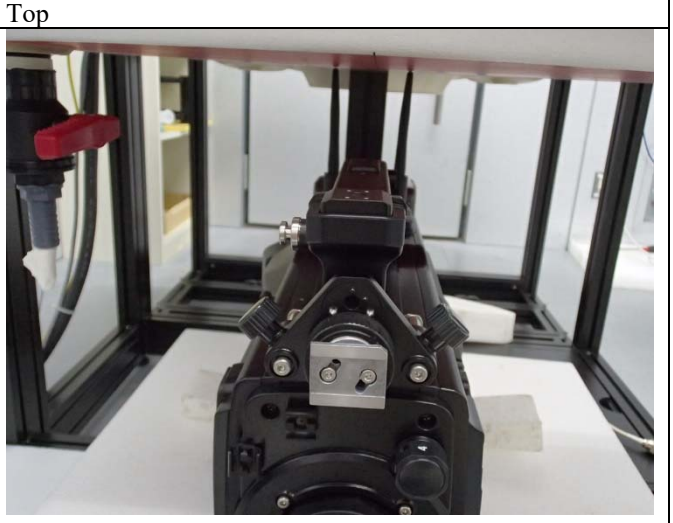

End of Report