INTRODUCTION

Warning & Caution

Please read and observe all the WARNINGS and CAUTIONS in this user's manual and retain it for future reference.

WARNING:

TO REDUCE THE RISK OF ELECTRIC SHOCK DO NOT REMOVE COVER (OR BACK). NO USER SERVICEABLE PARTS INSIDE. REFER TO QUALIFIED SERVICE PERSONNEL.

The lightning flash with arrowhead symbol, within an equilateral triangle, is intended to alert the user to the presence of uninsulated "dangerous voltage" within the product's enclosure that may be of sufficient magnitude to constitute a risk of electric shock to persons.

The exclamation point within an equilateral triangle is intended to alert the user to the presence of important operating and maintenance (servicing) instructions in the literature accompanying the appliance.

WARNING

To reduce the risk of fire or shock, do not expose this product to rain or moisture.
Apparatus shall not be exposed to dripping or splashing and no objects filled with liquids, such as vases, shall be placed on the apparatus.
There is danger of explosion if battery replaced improperly. replace only with the same or equivalent type.

CAUTION

These servicing instruction are for use by qualified service personnel only. to reduce the risk of electric shock, do not perform any servicing other than that contained in the operating instruction unless you are qualified to do so.

Important Safety Instruction

1. Read these instructions.

2. Keep these instructions.

3. Heed all warnings.

4. Follow all instructions.

5. Do not use this apparatus near water.

6. Clean only with a damp cloth.

7. Do not block any of the ventilation openings. Install in accordance with the manufacturer's instructions.

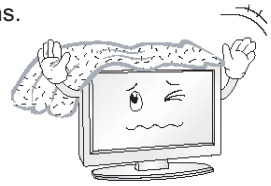

8. Do not install near any heat sources such as radiators, heat registers, stoves, or other apparatus (including amplifiers) that produce heat.

9. Do not defeat the safety purpose of the polarized or grounding type plug. A polarized plug has two blades with one wider than the other. A grounding type plug has two blades and a third grounding prong. The wide blade or the third prong is provided for your safety. When the provided plug does not fit into your outlet, consult an electrician for replacement of the obsolete outlet.

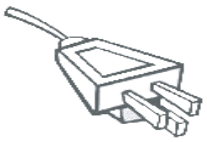

10. Protect the power cord from being walked on or pinched particularly at plugs, convenience receptacles, and the point where they exit from the apparatus.

11. Only use the attachments/accessories specified by the manufacturer.

12. Use only with a cart, stand, tripod, bracket, or table specified by the manufacturer, or sold with the apparatus. When a cart is used, use caution when moving the cart/apparatus combination to avoid injury from tip-over.

13. Unplug this apparatus during lightning storms or when unused for long periods of time.

14. Refer all servicing to qualified service personnel. Servicing is required when the apparatus has been damaged in any way, such as power supply cord or plug is damaged, liquid has been spilled or objects have fallen into the apparatus, the apparatus has been exposed to rain or moisture, does not operate normally, or has been dropped.

15. Do not overload wall outlets or extension cords This can result in a risk of fire or electric shock.

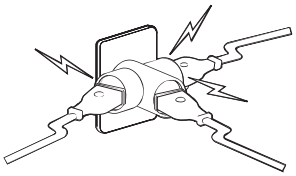

16. Connect at the receptacle certainly not to be Shaken (This can result in a risk of heat and A fire if it is connected to the wall outlet imperfectly)

17. Do not use the uncovered cables.
(This can result in a risk of fire or electric Shock.)

18. Keep children away from this product not to hang on or go up on it.

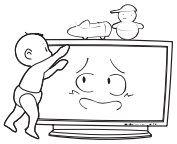

19. Leave batteries for remote control away from your young children. (They may swallow them)

20. Do not place this product in the place to reach children's hands.

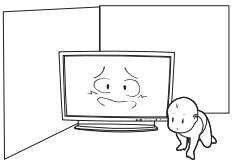

21. People over 2 persons must move this product (It can be the reason of the wound because of the weight of goods.)

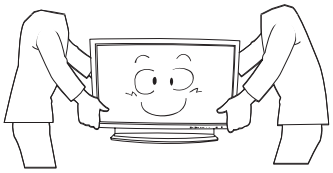

22. Never put objects of any kind into this product and place heavy things on it.

23. Place an antenna away from a high-voltage cable.

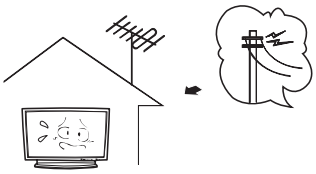

24. Please use a soft and dry cloth (not containing volatile matter) when you clean this product. (This can result in a risk of fire)

25. Should not be adhered to a power supply plug and receptacle. (This can result in a risk of fire.)

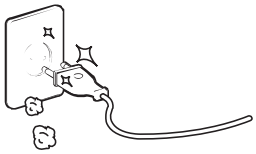

26. Do not use new batteries with old ones together. (This can result in a risk of electric shock.)

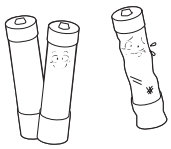

27. Place this product in a well-ventilated place. (This can result in a risk of fire)

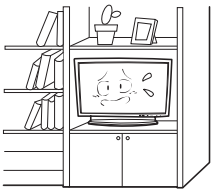

28. Do not take out a power supply plug with the wet hand. (This can result in a risk of electric shock)

29. Bend down the outdoor antenna cable to prevent the rain water flows and not to enter the room (This can result in a risk of fire or electric shock)

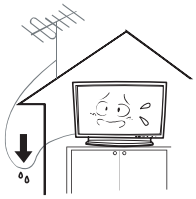

30. Do not place this product on the floor. (Children can push it down)

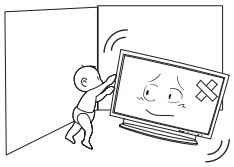

31. Place remote control away from a humid or hot place because it is very minute device.

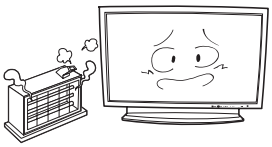

32. If this product is not used for a long period of time, unplug the power cord.(This can result in a risk of fire or electric shock)

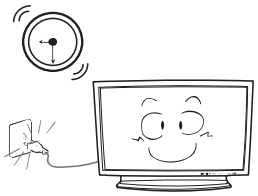

33. Do not drop this product. Unplug the power cord and ask to Service Center when it is broken.

34. Do not use this apparatus near water or at Outdoor.

35. Place the batteries rightly to the both side (+,-) when you replace them. (The batteries can be explosive and you're wound)

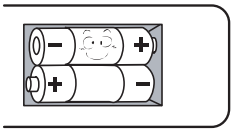

36. Maintain a suitable distance between you and a TV or monitor to protect you eyesight. (Your eye sight can get worse if you watch TV very nearly.)

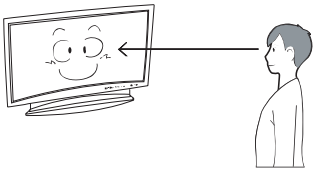

Warning & Caution

Note : This equipment has been tested and found to comply with the limit for a Class B digital device, pursuant to part 15 of the FCC Rules. These limits are designed to provide reasonable protection against harmful interference in a residential installation. This equipment generates, uses and can radiate radio frequency energy and, if not installed and used in accordance with the instructions, may cause harmful interference to radio communications, However, there is no guarantee that interference will not occur in a particular installation. If this equipment does cause harmful interference to radio or television reception, which can be determined by turning the equipment off and on, the user is encouraged to try to correct the interference by one or more of the following measures ;

for help.

CAUTION

Any changes or modifications in construction of this device which are Not expressly approved by the party responsible for compliance could void the user's authority to operate the equipment.

Contents

Introduction

PAGE #	
1	Warning & Caution
2~5	Important Safety Instruction
6	Regulatory Information
9	Installation precautions
10	Consideration for usage
11	The configuration of accessories
11	The optional accessories
12~13	The Names of each part
14~15	Remote Controller

Installation

External Equipments Connection

PAGE #	
16	Installation of Stand and Speakers
16	Connecting an Antenna Cable
17	Connecting to a VCR
18~22	Connecting to a Cable Box / Satellite Receiver
23~26	Connecting to a DVD Player / Video Game Machine
27	Connecting to a PC
28	Connecting to external AV source
29	Connecting to home theater system

Basic Operation

	PAGE #	
Getting Started	30	Getting Started
TV Operation	30~31	Scanning Channels (Automatic)
	31	Digital Demodulation Mode Setting
	32	Channel Edit – Store or Delete the channels
	33	Using Favorite (FAV.) Channel
	33	Displaying EPG (Electronic Program Guide)
Getting Information	34	Viewing the Information
	34	Viewing the Current Connected External Devices
Video Menu Option	35	Changing the Picture Mode
	36	Adjusting the Aspect Ratio
	36~37	Changing the Picture Mode
	37	Customizing the Picture
	38	Adjusting Color Tone
Audio Menu Option	38~39	Changing the Preset Sound Mode
	39	Adjusting the Equalizer
	40	Setting MTS (Multi Track Sound) Mode
	40	Automatic Volume Level Control

Contents

Additional Function

	PAGE #	
Setup menu option	41	Changing the OSD Menu language
	41	Setting Blue Back Screen
Time menu option	42	Setting the Current Time (Time Zone)
	42	Automatic Power On and Off (On Timer / Off Timer)
	43	Setting the Sleep
Miscellaneous	44	DNR (Digital Noise Reduction)
	44	Screen Wiper
	44	Pixel shift
PIP	45	PIP(Picture In Picture)
	46	Adjusting the Size of Sub picture
	46~47	Changing Input mode of Sub picture
	47	Adjusting the position of Sub picture
	48	Swapping the main with sub picture in PIP mode
CC/V-Chip	48	Viewing Closed Caption
	49	Parental Rating Control (V-Chip)

Monitor Function

	PAGE #	
	50	Using as a PC Monitor
	50	Check the current Resolution and Frequency rate
Adjusting	50	Adjusting the PC Picture
	51	Adjusting the Color Tone
	51	Automatic Adjustment of the PC Picture
	52	Reset Image and Color
	52~53	Adjusting the Position of Picture
	53	Adjusting the Frequency and the Phase

Reference

	PAGE #	
	54	Maintenance
	55	Trouble Shooting
	56	Timing Support for PC & DTV
	57	Specification of Product
	58	Warranty Card

Installation Precautions

Using the stand

maller than the LCD TV.

below figure.)

tion can cause a fire or damage to the LCD TV due to increased temperature of LCD TV inside.

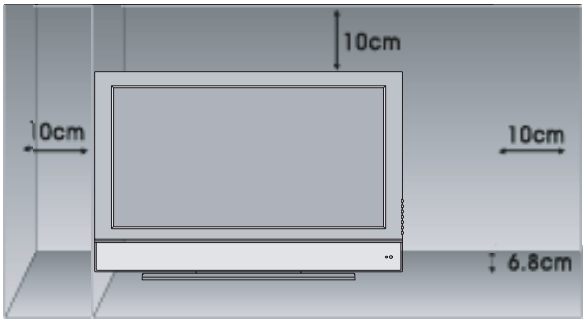

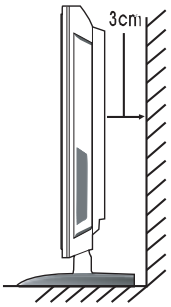

Wall mounting

low figure.)

tion can cause a fire or damage to the LCD TV due to increased temperature of LCD TV inside.

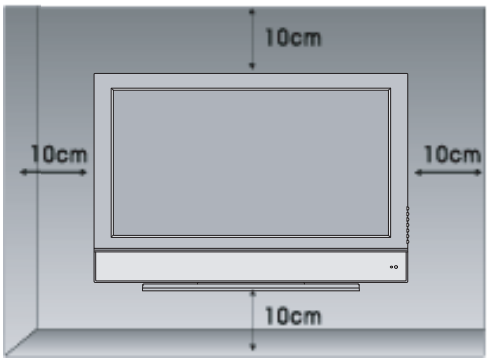

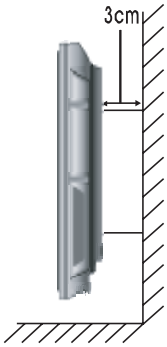

l mount” required for wall-mounted installation.

Consideration for Usage

What is LCD TV?

LCD(Liquid Crystal Display) is a next generation flat-panel display module. Liquid crystal material is contained between sheet of glass and electricity causes the liquid crystal material to reflect or block the light emitted from a light source inside the display chassis by the name of back-light. By incorporating this LCD display module, LCD TVs enable you to enjoy outstanding picture quality without the worries of space limitation and harmful radiation you may have experienced with conventional CRT TVs.

Still image(immovable) screen may damage to LCD TV

graphics and others may damage the screen.

f the sub-image screen stays on the corner of screen for a long time.

rs for a long period of time, it may cause damage to the LCD panel. It is recommended that you use 16:9 or panorama format.

Defect pixel that can be seen on LCD TV screen

(illuminated spots, bright spots, black spots or blinking)

Generally, LCD panel consists of about 100~200 million pixels and the possibility of having defective pixels is quite high, A LCD panel with a number of defective pixels below a certain number is not considered defective. The limited number of defective pixels does not affect the performance or reliability of the LCD TV. The standard of inspection regarding defective pixels is the same or better as the competitor’s offering on similar LCD TV. We will do our best to minimize the defective pixel as best as we can.

The Configuration of Accessories

Ensure that the following accessories are included with your LCD TV. If any accessory is missing, please contact the dealer from where you purchased the product.

The configuration of the components may look different the following illustration.

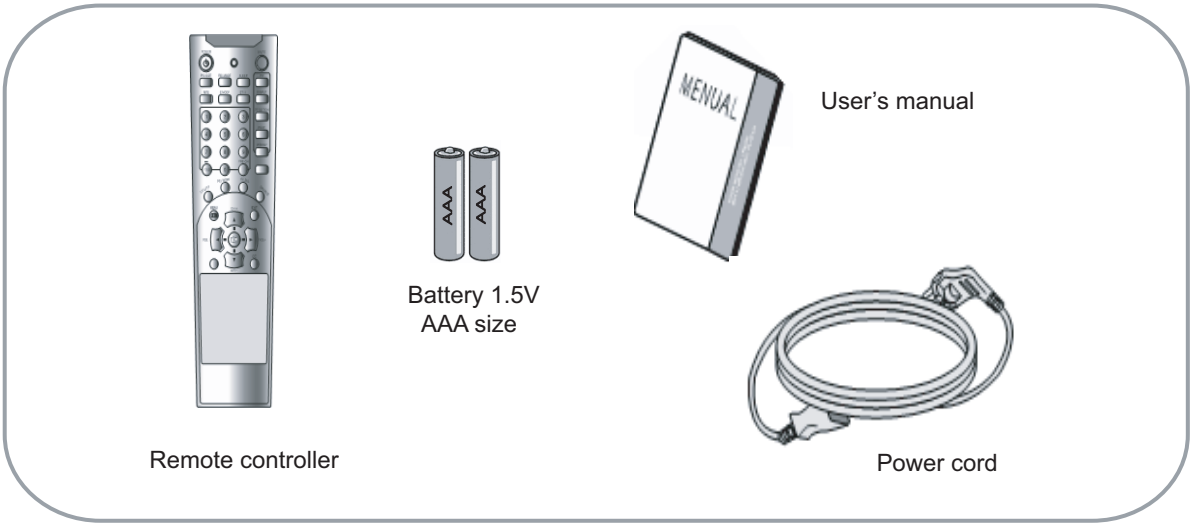

The Optional Accessories

If you need below optional cables to connect various external devices to LCD TV, to purchase the optional accessory cables, please contact the dealer from where purchased the product.

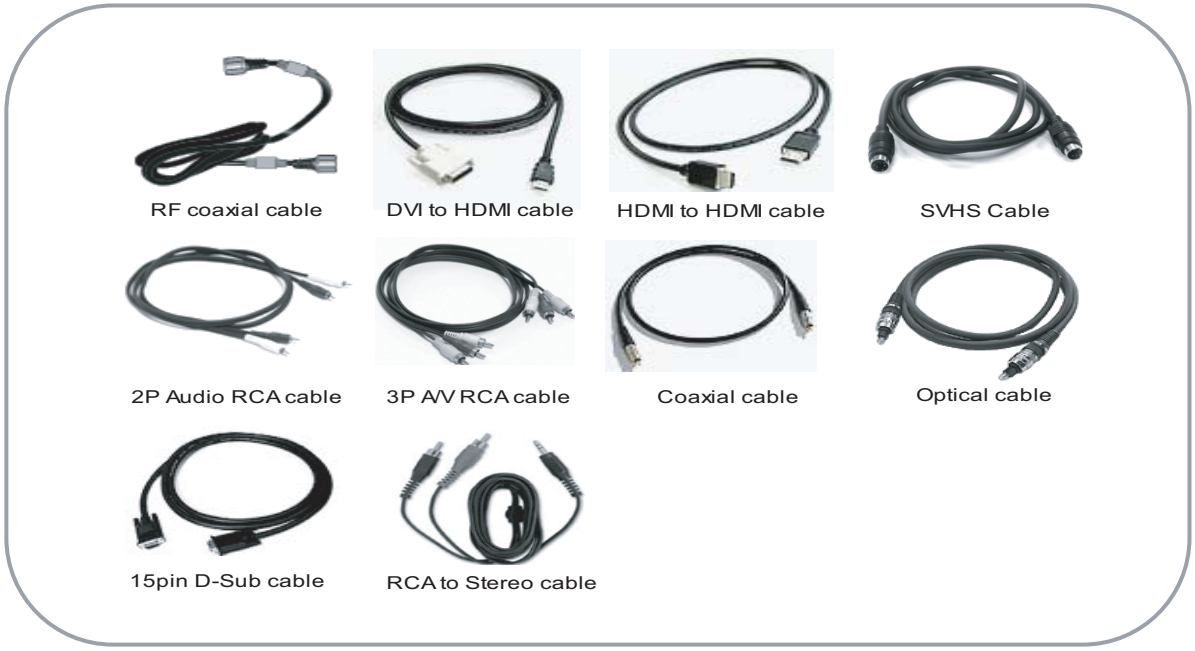

The Names of Each Parts

Front Panel Controls(model with speaker on the bottom)

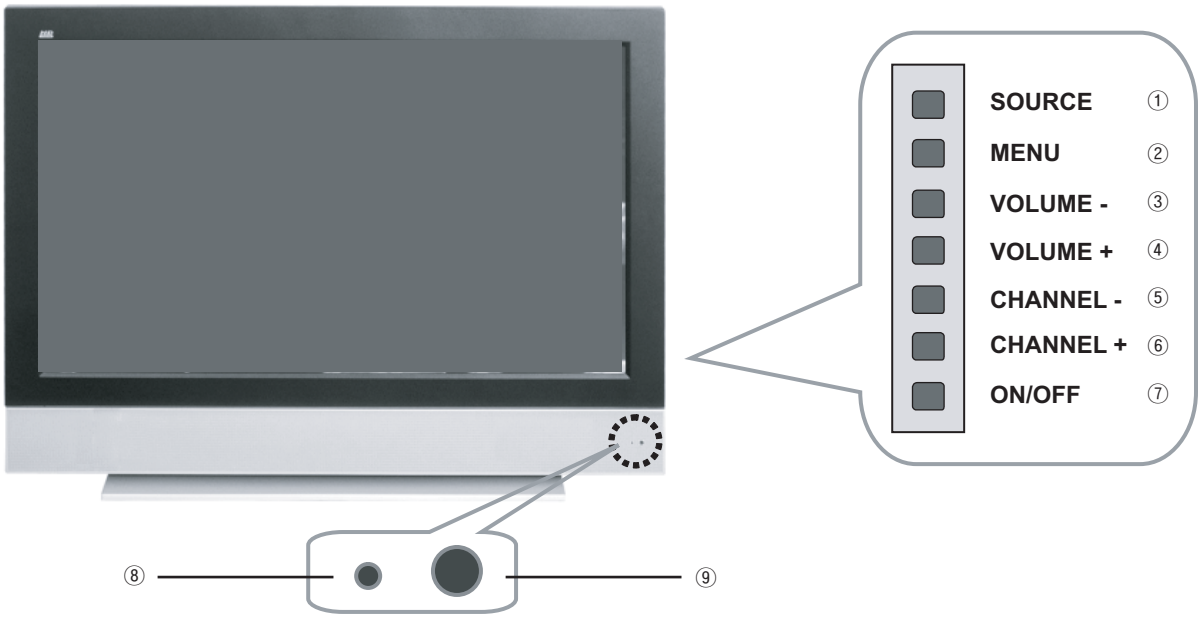

OSD (On Screen Display) Key Function

① **Source Button**
Change Input Source : Video, S-Video, Component, PC or HDMI, DTV/TV.

② **Menu Button**
Display On Screen Menu.

③ **Volume - Button / Set the value**
Adjust sound level or set the value while On Screen Menu is active.

④ **Volume + Button / Set the Value**
Adjust sound level or set the value while On Screen Menu is active.

⑤ **Channel - Button / Navigating the menu.**
Change channel or navigate while On Screen Menu is active.

⑥ **Channel + Button / Navigating the menu**
Change channel or navigate while On Screen Menu is active.

⑦ **ON/OFF Button**
Turn on or off the TV power.

LED & Remote control sensor Function

⑧ **LED display**
If LED is lighting up with red, LCD TV is standby status.
If LED is lighting up with green, LCD TV is normal operation status.

⑨ **Remote control sensor**
Receiving IR(Infra Red) signal from the remote controller.

Remote Controller

Installing Batteries

① Remove the rear cover of the remote controller by pressing the arrow Symbol downwards and then pulling firmly to remove it.

② Insert two supplied batteries(1.5V of AAA type).
Ensure that the polarities(+ and -) of the batteries are aligned correctly.

③ Close the cover.

CAUTION

- To confirm proper battery installation, press any button on the remote control and check the red LED on the remote control twinkles.
- Risk of explosion if battery is replaced by incorrect type.
- Dispose of used batteries according to national code.(Recycling program)
- Please avoid that any three-wavelength lamp, special fluorescent or neon sign is turned on near the LCD TV.

Remote Control Key Functions

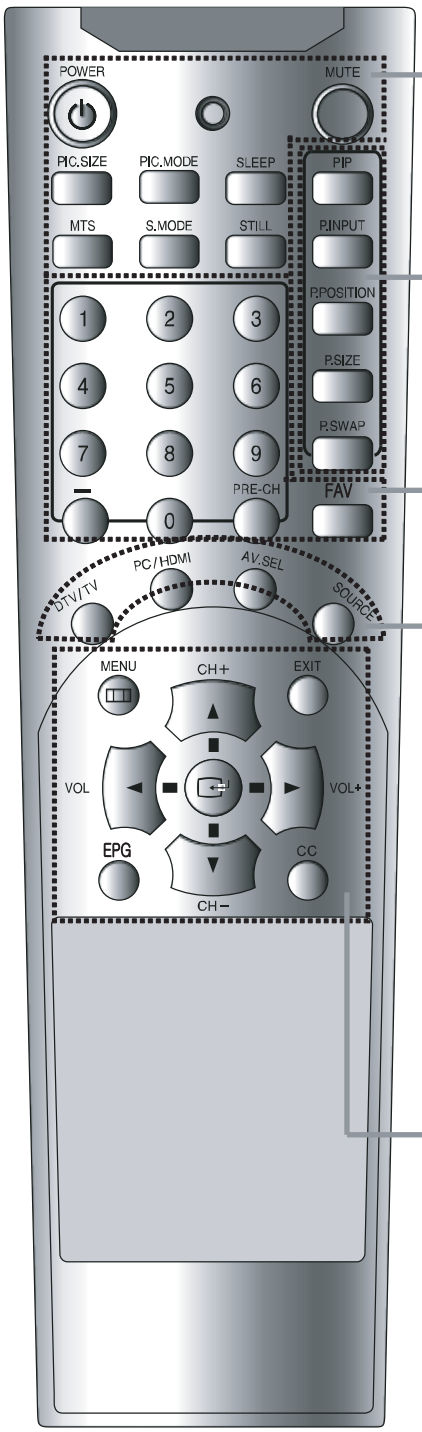

*POWER : Turn your TV on and off.
*PIC.SIZE : Change the screen size.
*PIC.MODE : Select the picture mode depending on the viewing enviornment.
*SLEEP : Set the sleep time.
*MTS : Change the sound mode to stereo, mono, or SEP.
*S.MODE : Select sound appropriate for the program's character.
*STILL : Freezes the currently-viewed picture.
*MUTE : Switches the sound on or off.

*PIP : Turn PIP (Picture in Picture) Mode on or off.
*P.INPUT : Select the input mode for the sub-picture.
*P.POSITION : Change the position of sub-picture.
*P.SIZE : Adjust the sub-picture size.
*P.SWAP : Exchange main with sub-picture.

* - (Dash) : Use to enter virtual channelsuch as 6-1, 6-2 etc.
*NUMBER : Press to change the channel.
*PRE-CH : Return to the last channel viewed.
*FAV : Use to scroll the favority channels.

*DTV/TV : Select DTV or TV(Analog) mode.
*PC/HDMI : Select PC or HDMI mode.
*AV.SEL : Rotates the input mode in regular sequence. (S-Video, AV1, AV2, Component 1, Component 2)
*SOURCE : Display(or select) the connected external sources.

*MENU : Display OSD(On Screen Display) menu.
*EXIT : Clears all on-screen display and returns to TV. Viewing from any menu.
*EPG : Brings up the TV program guide on screen system to the screen.
*CC : Select the closed caption : Off, CC 1~4 or Text 1~4.
*CH+/- : Select available channels found with channel scan.
*VOL+/- : Increases/Decreases the sound level.
*INFO : View informations.

INSTALLATION

Installation of Stand and Speakers

Following words explain how to install speakers and stand to LCD TV. This installation procedure is only for who has bought 42” LCD TV. If you have bought 32” or 37” one then you may start to install without this guidance.

For Model With Speaker on the Bottom

Please check if you are missing any of following units.
If you are, then please contact the store that you bought from.

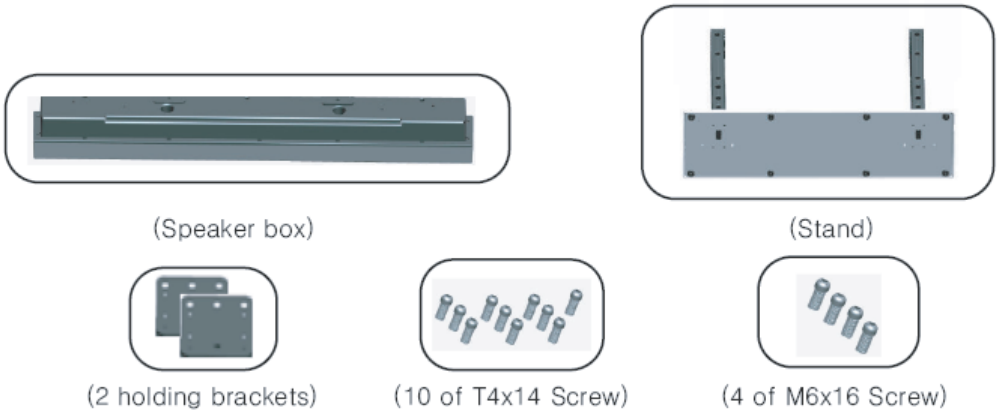

1. Install Speaker Box with Holding Brackets

Put T4x14 screws in as you can see in the picture bellow.

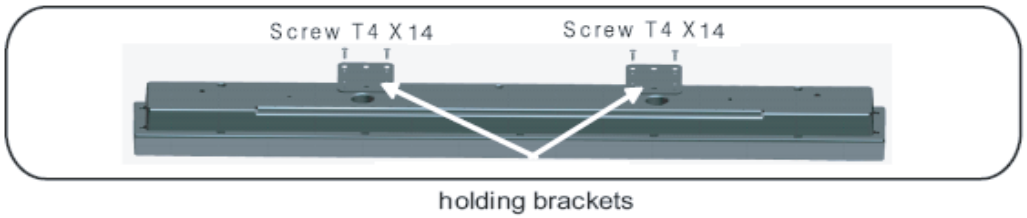

2. Install Speaker Box with LCD TV

When you install please put your LCD TV on the table without any winding, and it is good idea to put blanket under. Then attach speaker box to LCD TV with screws(T4x14) as you can see in the picture bellow.
After that, put connecting cable into speaker terminal on the rear of LCD TV. Before you do it check the color of cables and match the colors(i.e. red with red, black with black).

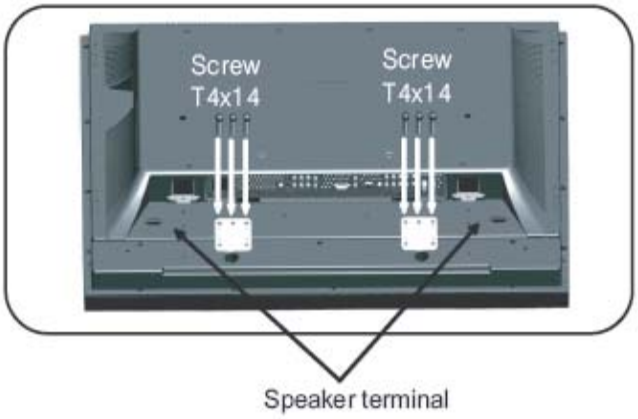

3.Installing Stand

Install stand to LCD TV as you can see in the picture below. When you install please do it at the safe place such as table without any winding but with soft blanket over.

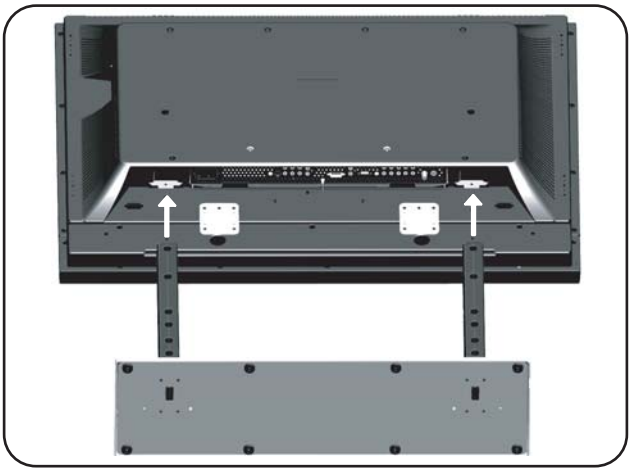

4. Locking Stand

When you finish installing stand assemble with M6x16 screws (refer to the picture below).
After complete assembling carry LCD TV to the place that you want to put it. Please carry this product with atleast two men for your safety. Also, when you hold LCD TV, hold other parts than speaker box such as LVD TV itself or the stand. If you hold speaker box it may get damaged due to LCD TV's weight.

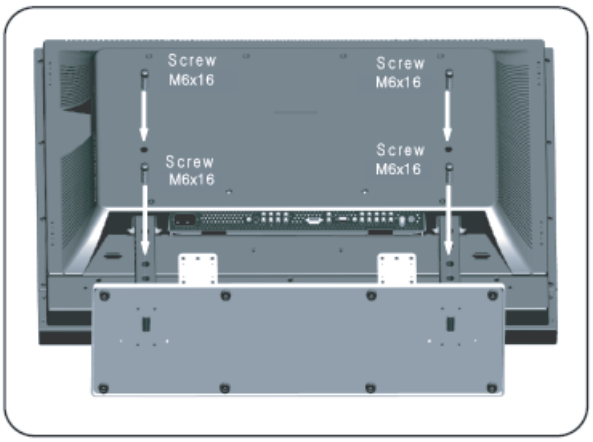

For Model with Speakers on the Sides

Firstly make sure you have all of units bellow.
If you are missing any of them contact the store.

(Speaker box L/R)

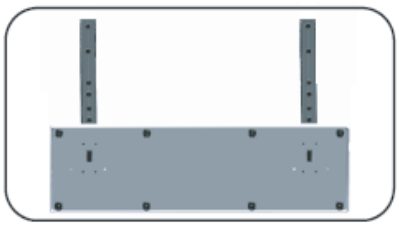

(Stand)

(4 of Holding brackets)

(20 of T4X14 Screws)

(4 of M6x16 Screws)

1. Installing holding bracket

Assemble holding bracket and speaker box with T4x14 screws (refer to the picture below).

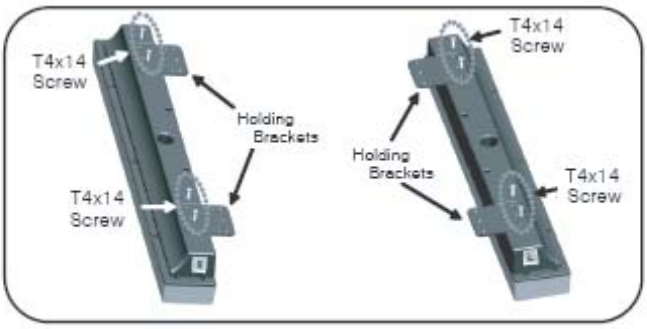

2. Installing speaker box to LCD TV

When you install put LCD TV on clean surface with soft blanket under in order to avoid possible damage. Assemble LCD TV and speaker box with T4x14 screws (refer to the picture bellow). Install speaker box to LCD TV after checking L/R sign on it. After that, put connecting cable into speaker terminal on the rear of LCD TV.

Installation

Before you do it check the color of cables and match the colors (i.e. red with red, black with black).

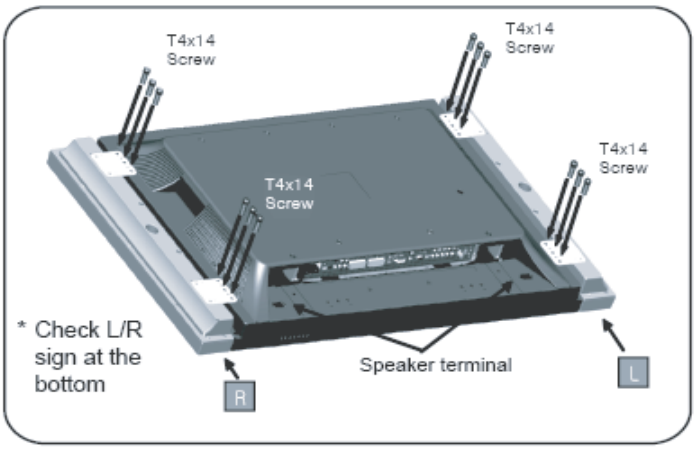

3. Installing Stand

Install stand to LCD TV as you can see in the picture below. When you install please do it at the safe such as table without any winding but with soft blanket over.

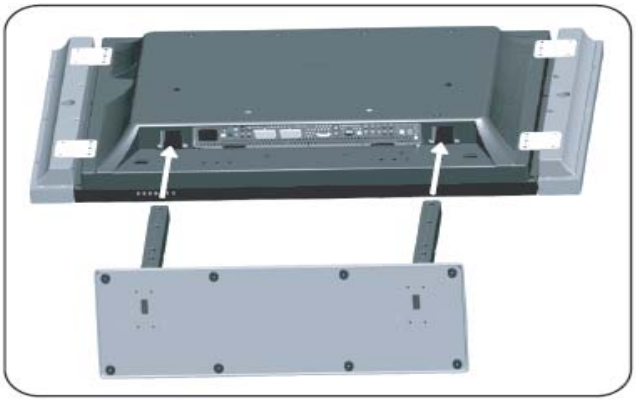

4. Locking Stand

When you finish installing stand assemble with M6x16 screws (refer to the picture below).

After complete assembling carry LCD TV to the place that you want to put it. Please carry this product with atleast two men for your safety. Also, when you hold LCD TV, hold other parts than speaker box such as LVD TV itself or the stand. If you hold speaker box it may get damaged due to LCD TV's weight.

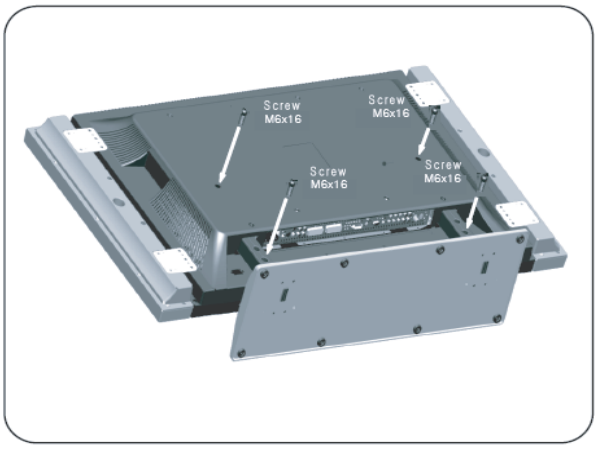

Connecting an Antenna Cable

Outdoor Air Antenna with 75-ohm RF Coaxial cable

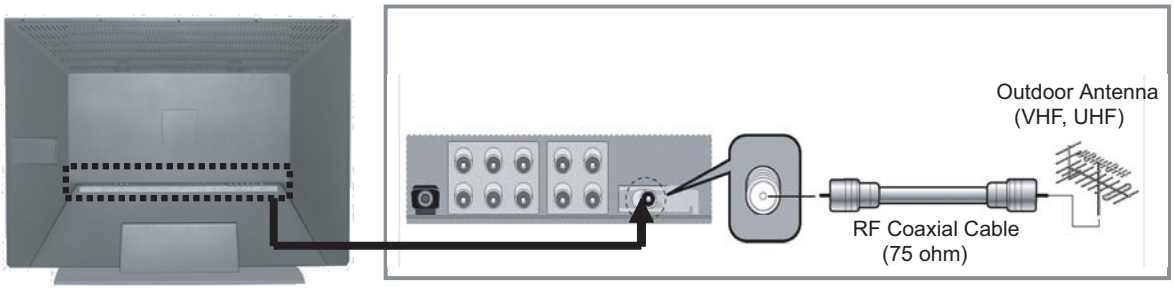

Cable Television Network

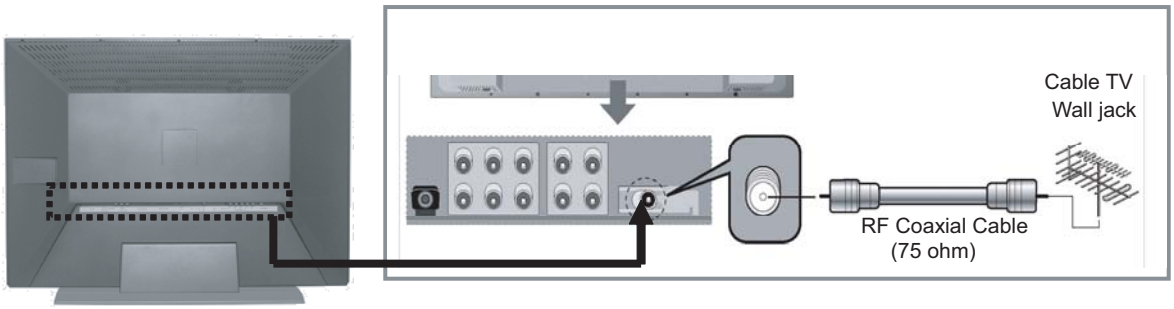

, purchase and install a signal amplifier.

s, install a “2-way signal splitter” in the connection.

, contact your dealer for assistance.

Connecting to a VCR

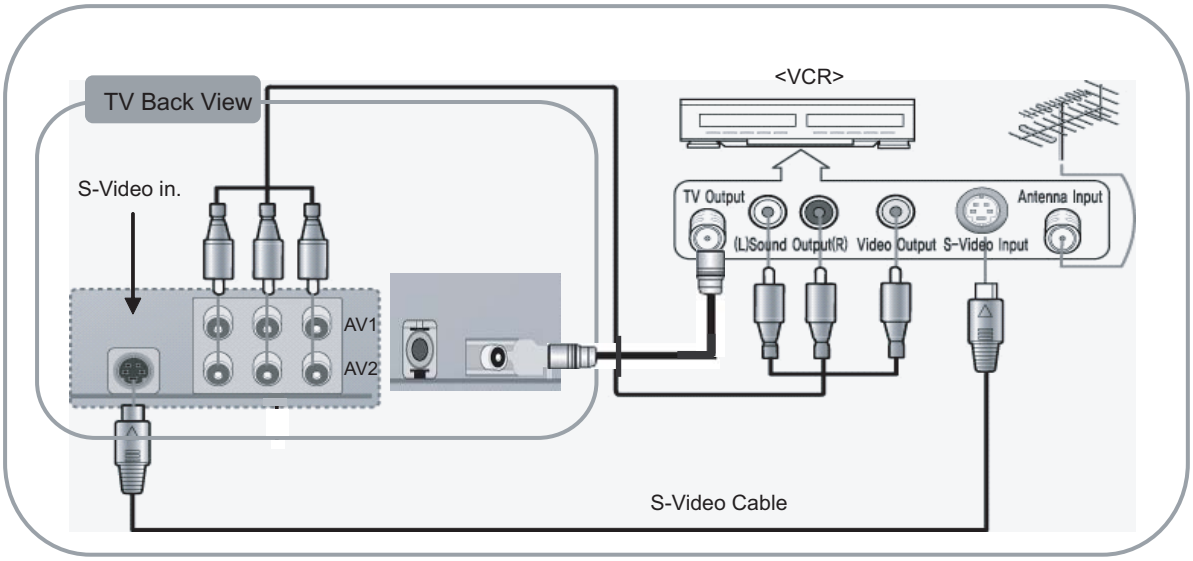

When connecting with an antenna

① Connect the TV output(or RF antenna socket) of the VCR to the Antenna socket on LCD TV.
② Connect the RF coaxial cable to the antenna input of the VCR.
③ Set VCR output switch to 3 or 4 and then tune TV to the same channel number.
④ Insert a video tape into the VCR and press PLAY on the VCR.(Refer to the VCR user's manual.).

When connecting with a composite cable(or RCA cable)

① Connect the AUDIO/VIDEO jack between TV and VCR. Match the jack colors.(Video is Yellow. Audios are in White and Red.)
② Turn on the LCD TV, press [AV.SEL] button on the remote controller to select 'AV 1' mode.
(Or press [SOURCE] button to show and select the connected and available external devices on the screen.)
If you connected 'AV 2', select 'AV 2' mode.
③ Insert a video tape into the VCR and press PLAY on the VCR.(Refer to the VCR user's manual).

When connecting with a S-Video cable(or SVHS cable)

① Connect the S-Video output of VCR to the S-Video input on the LCD TV. The picture quality is improved compared to normal composite input.
② Connect the audio cable between the audio jack of AV 1 on LCD TV and the sound out jack of VCR. Match the jack color.(Audios are in White and Red.)
③ Turn on the LCD TV, press [AV.SEL] button on the remote controller to select 'S-Video' mode.
(Or press [SOURCE] button to show and select the connected and available external devices on the screen.)
④ Insert a video tape into the VCR and press PLAY on the VCR.(Refer to the VCR user's manual).

Connecting to a Cable Box/Satellite Recevier

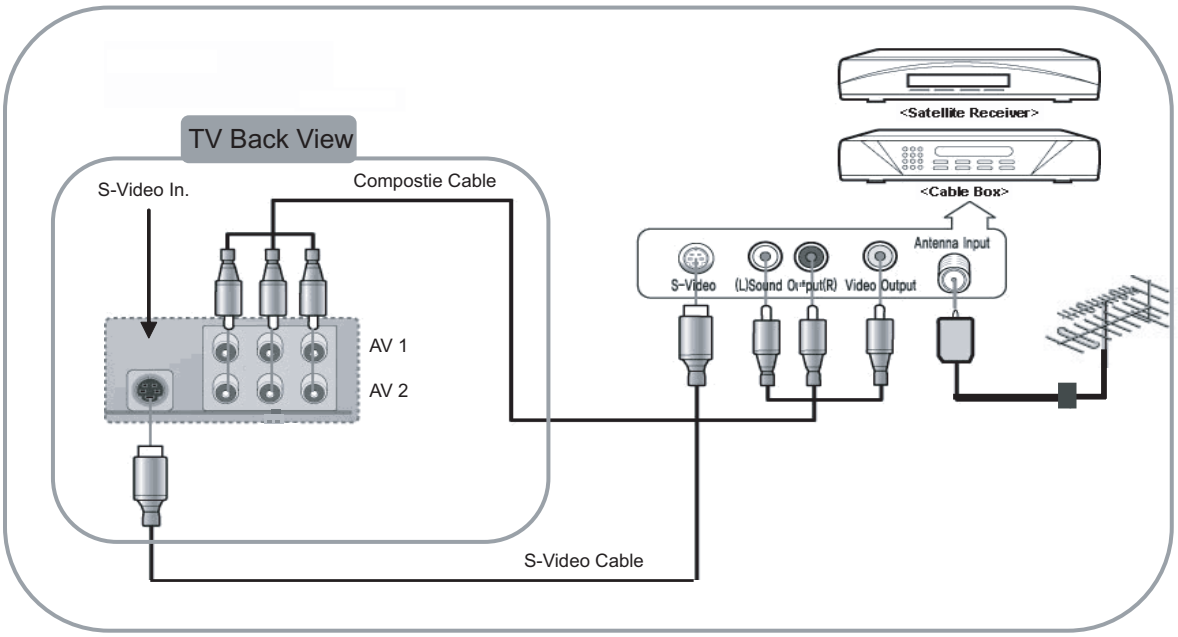

Connecting the Antenna Cable to Cable Box / Satellite Receiver

① Connect the RF coaxial cable to the antenna input of the Cable Box / Satellite Receiver.

When connecting with a composite cable(or RCA cable)

① Connect the AUDIO/VIDEO jack between TV and Cable Box/Satellite Receiver. Match the jack colors.(Video is yellow. Audios are in White and Red.)

② Turn on the LCD TV, press [AV.SEL] button on the remote controller to select ‘AV 1’ mode.
(Or press [SOURCE] button to show and select the connected and available external devices on the screen.)
If you connected ‘AV 2’, select ‘AV 2’ mode.

③ To play the Cable Box/Satellite Receiver, refer to user’s manual.

When connecting with a S-Video cable(or SVHS cable)

① Connect the S-Video output of the Cable Box/Satellite Receiver to the S-Video input on the LCD TV. The picture quality is improved compared to normal composite input.

② Connect the audio cable between the audio jack of AV 1 on LCD TV and the sound out jack of the Cable Box/ Satellite Receiver. Match the jack color.(Audios are in White and Red.)

③ Turn on the LCD TV, press [AV.SEL] button on the remote controller to select ‘S-Video’ mode.
(Or press [SOURCE] button to show and select the connected and available external devices on the screen.)

④ To play the Cable Box/Satellite Receiver, refer to the user’s manual.

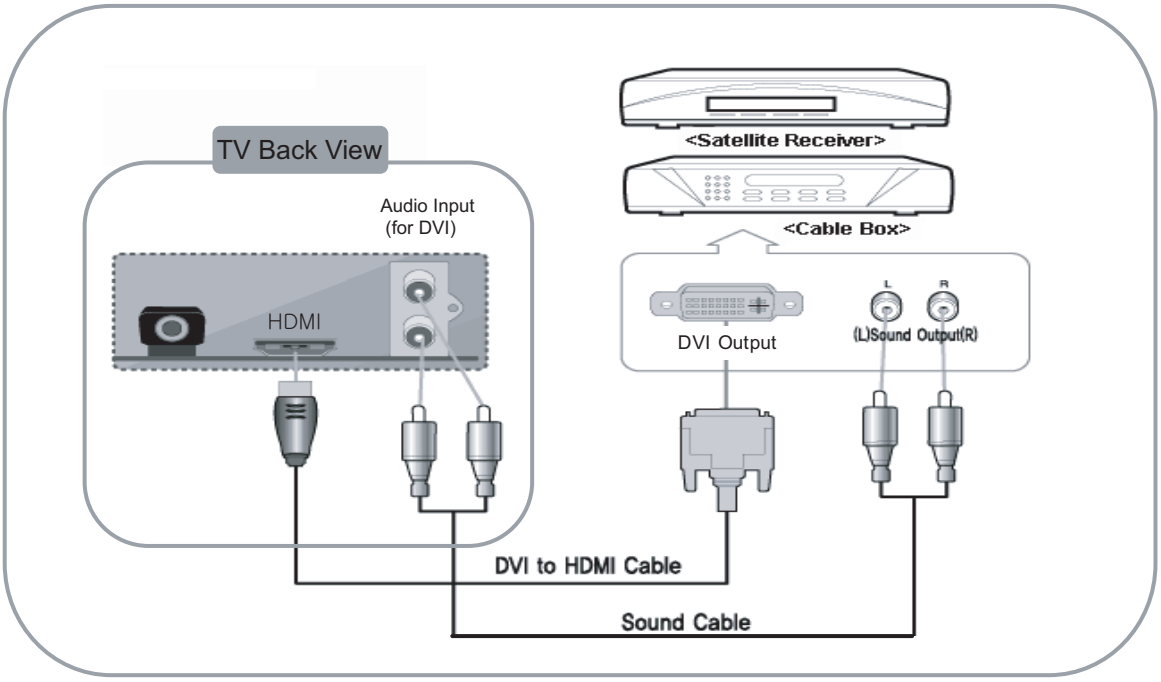

When connecting with DVI to HDMI cable(while DVI is supported)

① Connect the DVI output of the Cable Box/Satellite Receiver to the HDMI input on the LCD TV.

② Connect the audio cable between the audio jack of AUDIO INPUT on LCD TV and the sound out jack of the Cable Box/Satellite Receiver. Match the jack color.(Audios are in White and Red.)

③ Turn on the LCD TV, press [PC/HDMI] button on the remote controller to select 'HDMI' mode.
(Or press [SOURCE] button to show and select the connected and available external devices on the screen.)

④ To play the Cable Box/Satellite Receiver, refer to the user's manual.

and no HDMI, a separate audio is necessary.

unction, the output resolution of the Cable Box/Satellite Receiver will be automatically set to 1280X720p.

uto DVI function, you need to set the output resolution of Cable Box/Satellite Receiver appropriately. To get the best picture quality, adjust the output resolution of Cable Box/Satellite Receiver to 1280X720p.

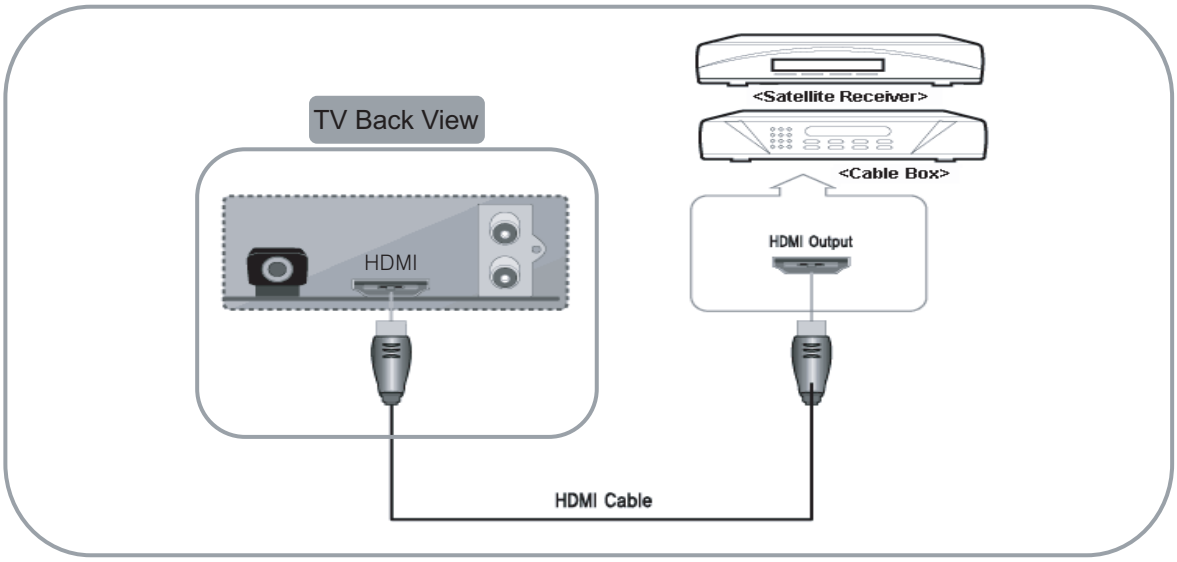

When connecting with HDMI to HDMI cable(while HDMI is supported)

① Connect the HDMI output of the Cable Box/Satellite Receiver to the HDMI input on the LCD TV.

② HDMI to HDMI connection does not require additional sound cable connection.
Turn on the LCD TV, press [PC/HDMI] button on the remote controller to select 'HDMI' mode.

③ (Or press [SOURCE] button to show and select the connected and available external devices on the screen.)

④ To play the Cable Box/Satellite Receiver, refer to the user's manual.

What is HDMI?

The High-Definition Multimedia Interface (HDMI) is an industry-supported uncompressed, all digital audio/video interface. HDMI provides an interface between any compatible digital audio/video source, such as a Set-top Box, DVD Player and A/V Receiver and a compatible digital audio/video monitor, such as a digital television (DTV) . HDMI supports standard, enhanced or high definition video, plus multi-channel digital audio on a single cable.

usly with using a HDMI cable.

I function, the output resolution of the Cable Box/Satellite Receiver will be automatically set to 1280X720p.

uto HDMI function, you need to set the output resolution of the Cable Box/Satellite Receiver appropriately. To get the best picture quality, adjust the output resolution of the Cable Box/Satellite Receiver to 1280X720p.

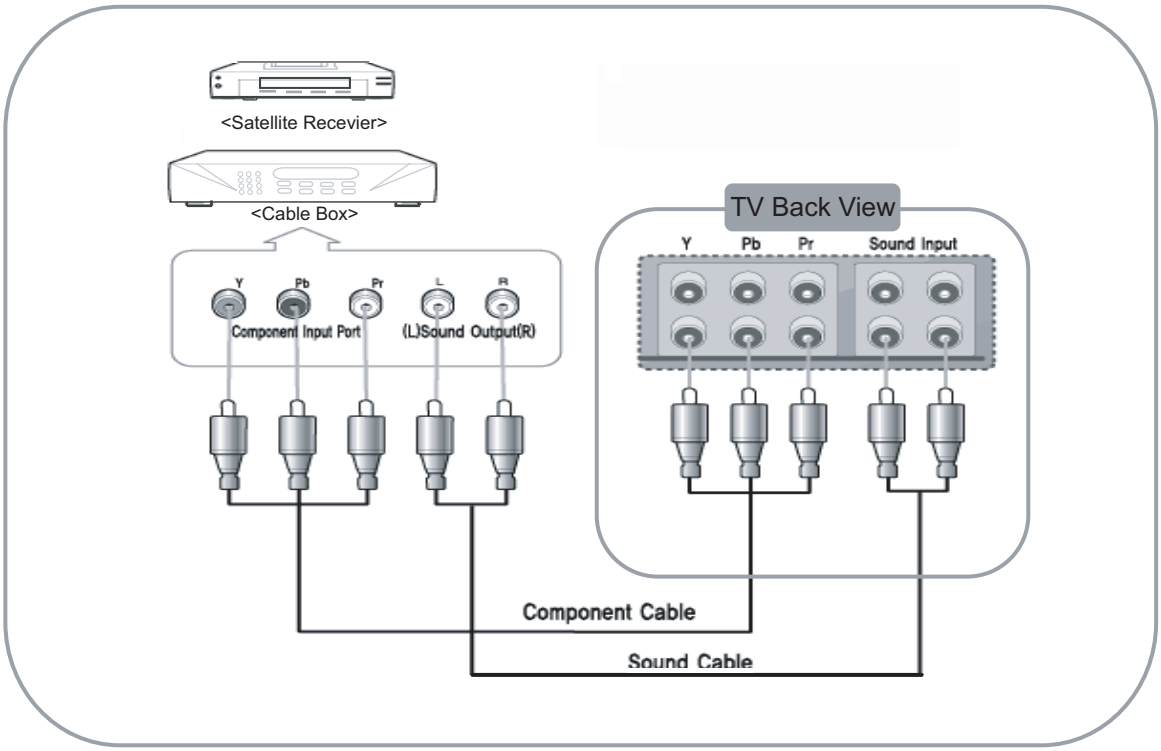

When connecting with Component cable(while Component is supported)

① Connect the video outputs(Y,Pb,Pr) of the Cable Box/Satellite Receiver to the Component 1 or Component 2 input on the LCD TV.

② Connect the audio cable between the AUDIO IN on LCD TV and the sound out jack of the Cable Box/Satellite Receiver. Match the jack color.(Audios are in White and Red.)

③ Turn on the LCD TV, press [AV.SEL] button on the remote controller to select Component 1 or Component 2 mode. (Or press [SOURCE] button to show and select the connected and available external devices on the screen.)

④ To play the Cable Box/Satellite Receiver, refer to the user's manual.

Component Port

To get better picture quality, connect a Cable Box / Satellite Receiver to component input port of LCD TV as shown below.

Component input ports on the LCD TV	Y	Pb	Pr
Component output port on Box / Satellite Receiver	Y	Pb	Pr
	Y	B−Y	R−Y
	Y	Cb	Cr
	Y	PB	PR

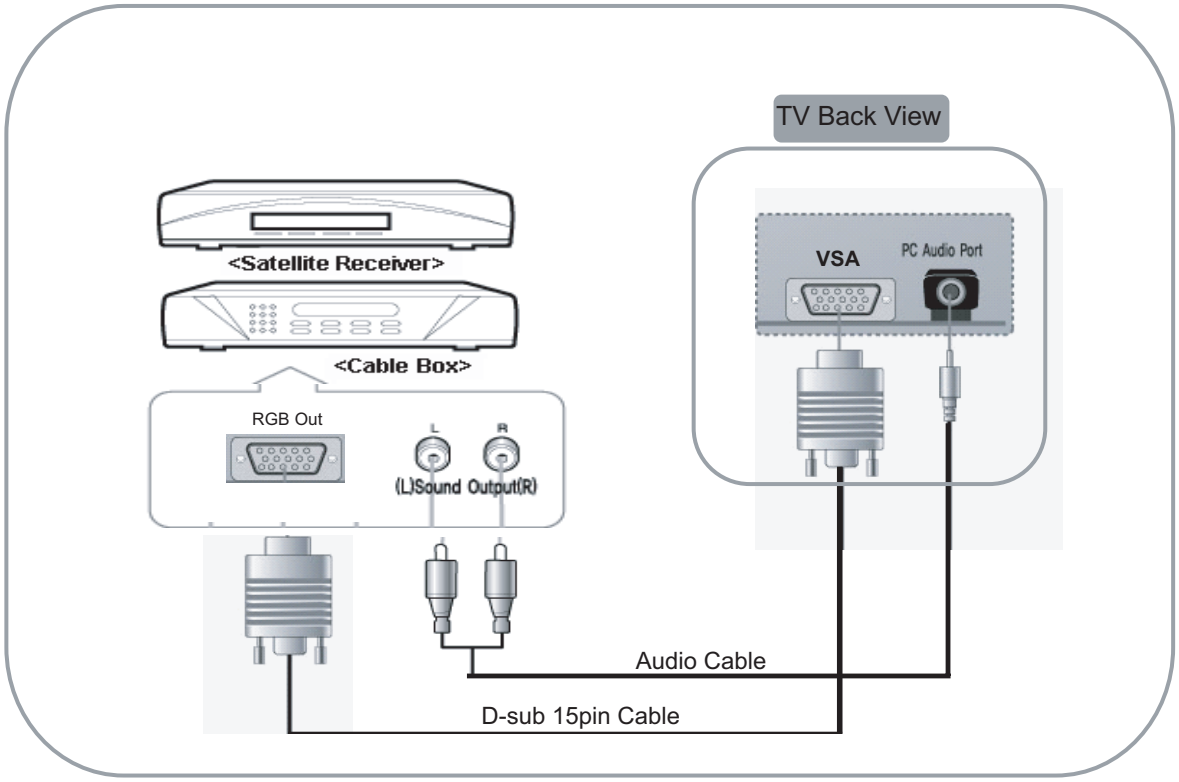

When connecting with D-Sub 15pin cable(while D-Sub is supported)

① Connect the RGB output of the Cable Box/Satellite Receiver to the RGB input on the LCD TV.

② Connect the audio cable between the AUDIO IN on LCD TV and the sound out jack of the Cable Box/Satellite Receiver.

③ Turn on the LCD TV, press [PC/HDMI] button on the remote controller to select PC mode. (Or press [SOURCE] button to show and select the connected and available external devices on the screen.)

④ To play the Cable Box/Satellite Receiver, refer to the user's manual.

Connecting to a DVD Player

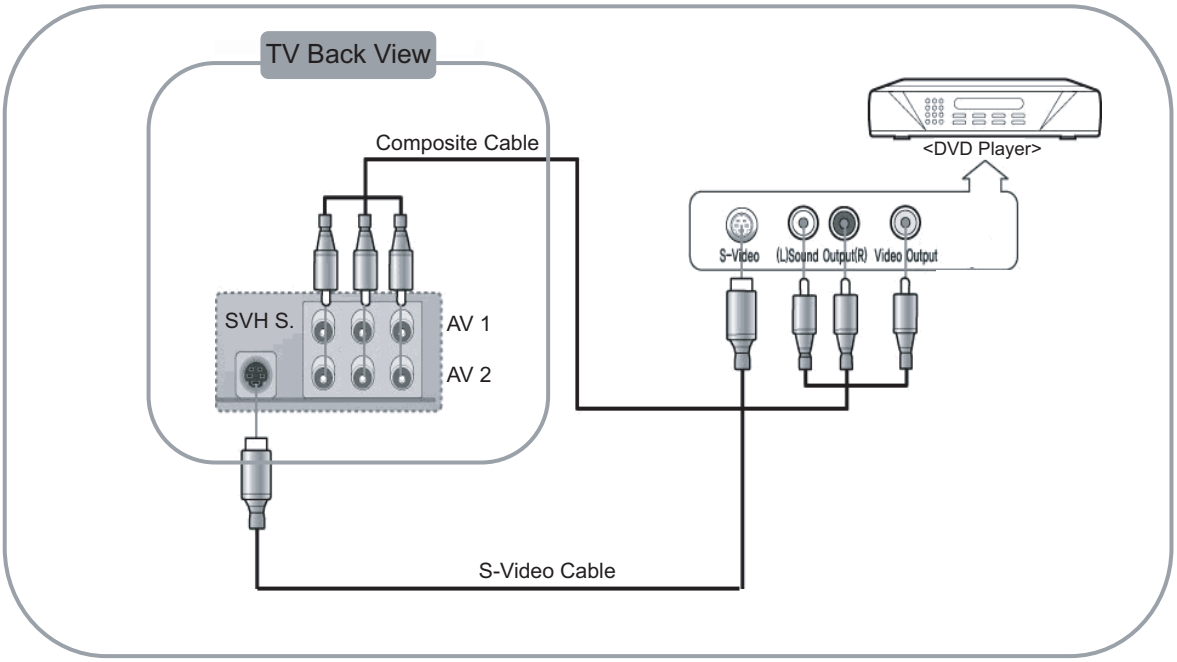

When connecting with a composite cable(or RCA cable)

① Connect the AUDIO/VIDEO jack between TV and DVD player. Match the jack colors.(Video is yellow. Audios are in White and Red.)

② Turn on the LCD TV, press [AV.SEL] button on the remote controller to select 'AV 1' mode.
(Or press [SOURCE] button to show and select the connected and available external devices on the screen.)

③ If you connected 'AV 2', select 'AV 2' mode.

④ To play the DVD player, refer to the user's manual.

When connecting with a S-Video cable(or SVHS cable)

① Connect the S-Video output of the DVD player to the S-Video input on the LCD TV.
The picture quality is improved compared to normal composite input.

② Connect the audio cable between the audio jack of AV 1 on LCD TV and the sound out jack of the DVD player.
Match the jack color.(Audios are in White and Red.)

③ Turn on the LCD TV, press [AV.SEL] button on the remote controller to select 'S-Video' mode.
(Or press [SOURCE] button to show and select the connected and available external devices on the screen.)

④ To play the DVD player, refer to the user's manual.

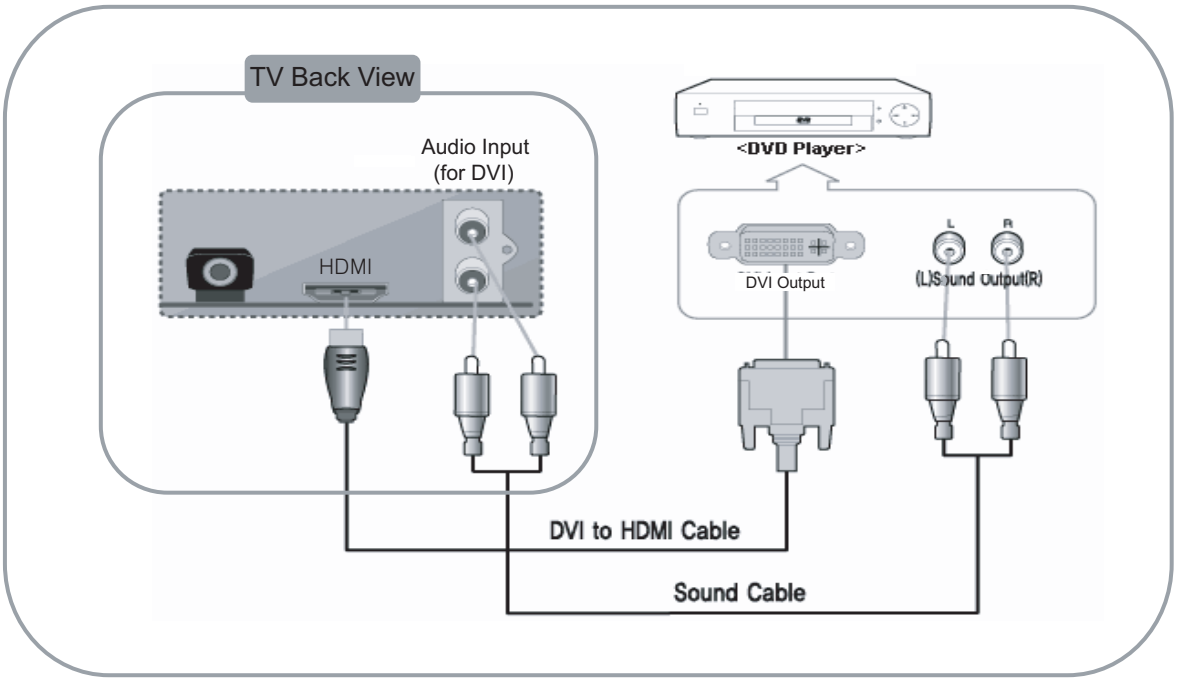

When connecting with DVI to HDMI cable(while DVI is supported)

① Connect the DVI output of the DVD player to the HDMI input on the LCD TV.

② Connect the audio cable between the audio jack of AUDIO INPUT on LCD TV and the sound out jack of the DVD player. Match the jack color.(Audios are in White and Red.)

③ Turn on the LCD TV, press [PC/HDMI] button on the remote controller to select ‘HDMI’ mode.
(Or press [SOURCE] button to show and select the connected and available external devices on the screen.)

④ To play the DVD player, refer to the user’s manual.

udio is necessary.

t resolution of the DVD player will be automatically set to 1280X720p.

you need to set the output resolution of DVD player appropriately. To get the best picture quality, adjust the output resolution of DVD player to 1280X720p.

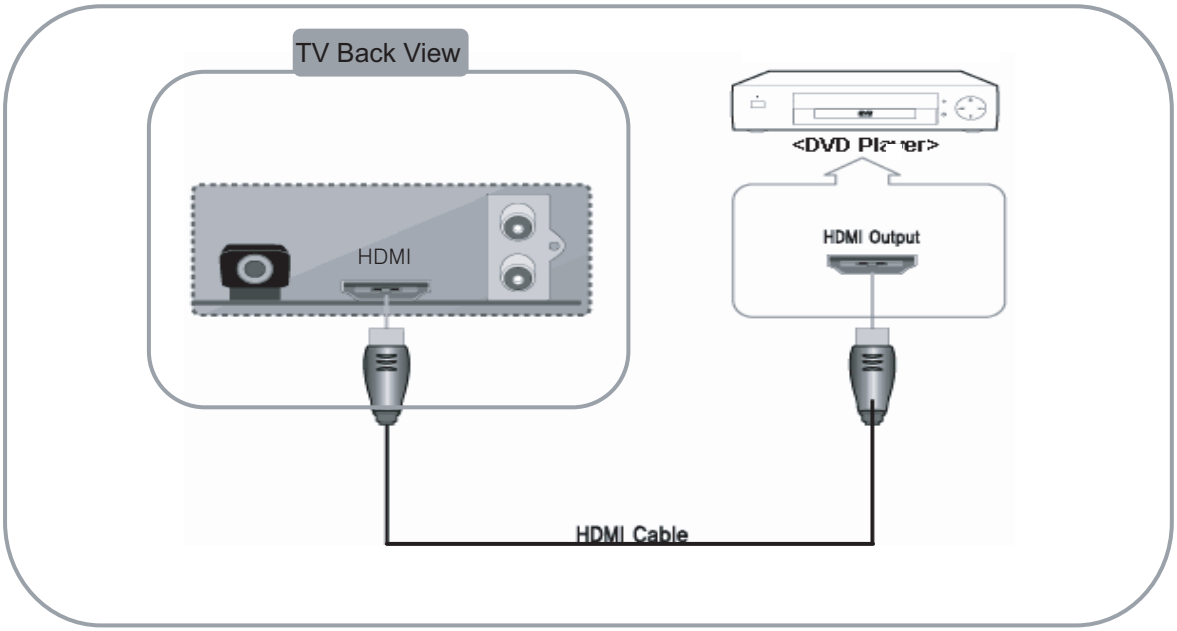

When connecting with HDMI to HDMI cable(while HDMI is supported)

① Connect the HDMI output of the DVD player to the HDMI input on the LCD TV.
② HDMI to HDMI connection does not require additional sound cable connection.
③ Turn on the LCD TV, press [PC/HDMI] button on the remote controller to select 'HDMI' mode.
(Or press [SOURCE] button to show and select the connected and available external devices on the screen.)
④ To play the DVD player, refer to the user's manual

What is HDMI?

The high-definition Multimedia Interface (HDMI) is an industry-supported uncompressed, all digital audio/video interface. HDMI provides an interface between any compatible digital audio/video source, such as a Set-top Box, DVD Player and A/V Receiver and a compatible digital audio/video monitor, such as a digital television (DTV) . HDMI supports standard, enhanced or high definition video, plus multi-channel digital audio on a single cable.

eously with using a HDMI cable.

solution of DVD player will be automatically set to 1280X720p.

tion, you need to set the output resolution of DVD player appropriately. To get the best picture quality, adjust the output resolution of DVD player to 1280X720p.

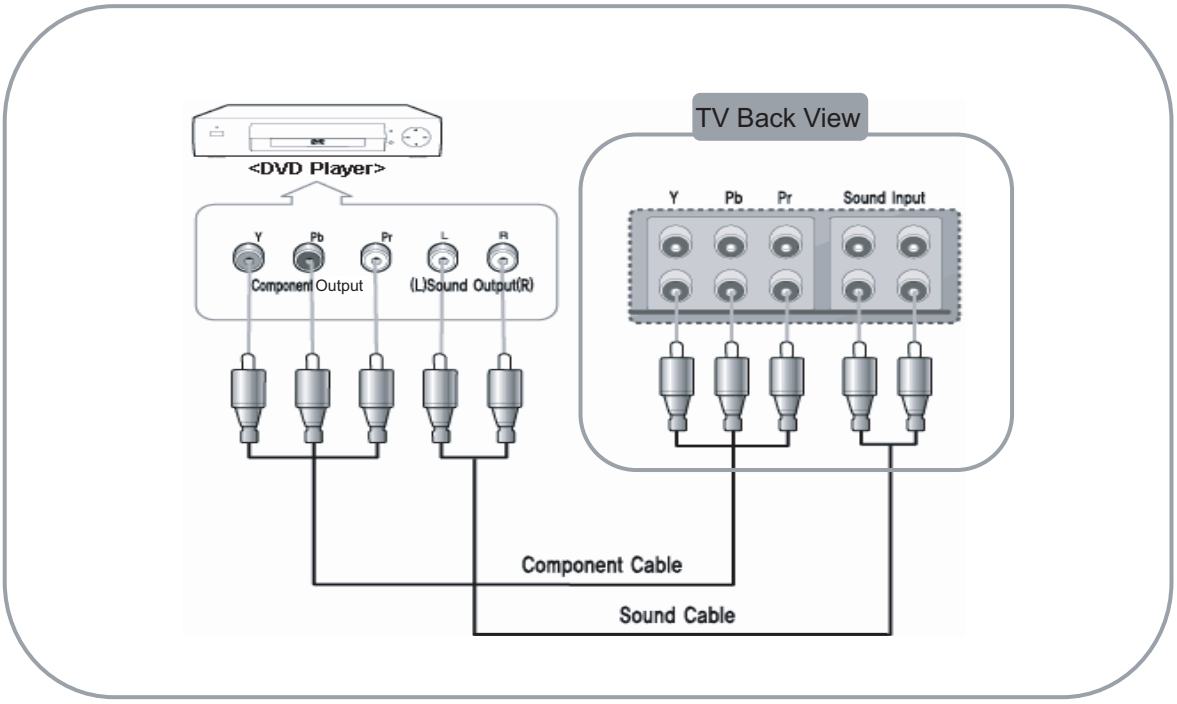

When connecting with Component cable(while Component is supported)

① Connect the video outputs(Y,Pb,Pr) the DVD player to the Component 1 or Component 2 input on the LCD TV.

② Connect the audio cable between the AUDIO IN on LCD TV and the sound out jack of the DVD player. Match the jack color.(Audios are in White and Red.)

③ Turn on the LCD TV, press [AV.SEL] button on the remote controller to select Component 1 or Component 2 mode. (Or press [SOURCE] button to show and select the connected and available external devices on the screen.)

④ To play the DVD player, refer to the user's manual.

Component Port

To get better picture quality, connect a DVD player to component input port of LCD TV as shown below.

LCD TV의 컴포넌트 단자	Y	Pb	Pr
DVD 플레이어의 컴포넌트 단자	Y	Pb	Pr
	Y	B-Y	R-Y
	Y	Cb	Cr
	Y	PB	PR

Connecting to a PC

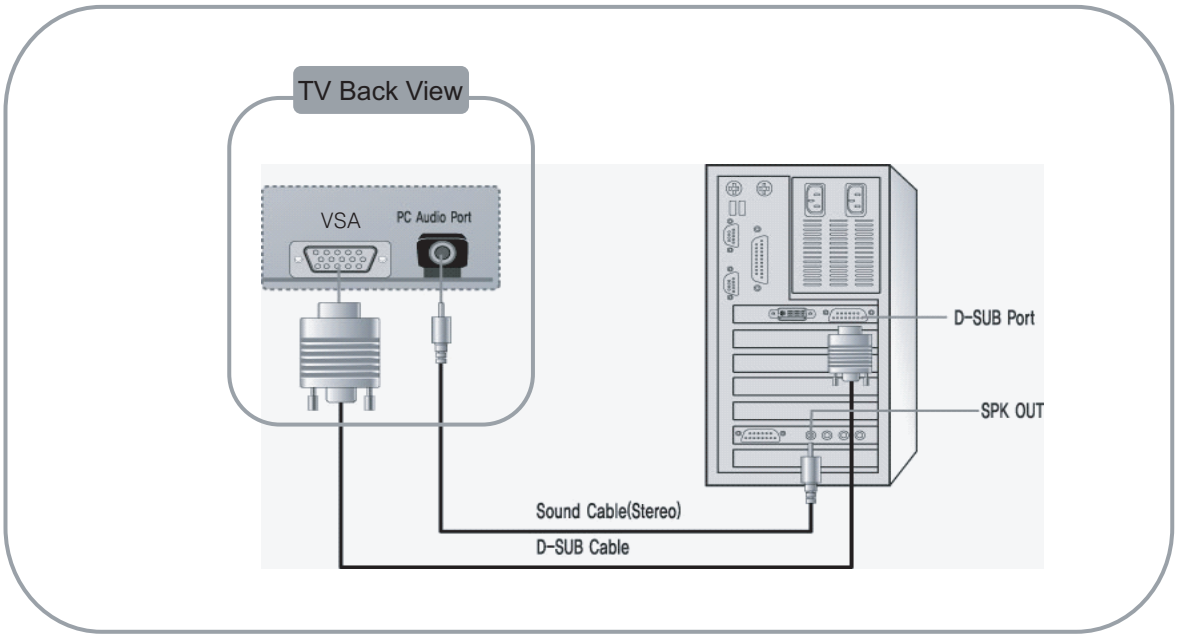

When connecting with D-Sub 15pin cable

① Connect the RGB output of the PC to the RGB input on the LCD TV.

② Connect the audio cable between the AUDIO IN on LCD TV and the sound out jack of the PC.

③ Turn on the LCD TV, press [PC/HDMI] button on the remote controller to select PC mode. (Or press [SOURCE] button to show and select the connected and available external devices on the screen.)

CAUTION

If you connect PC to LCD TV by using “DVI to HDMI cable”, LCD TV may abnormally display because “HDMI” interface of LCD TV is not VESA standard for PC interface.

FCC NOTICE

THIS DEVICE COMPLIES WITH PART 15 OF THE FCC RULES.
OPERATION IS SUBJECT TO THE FOLLOWING TWO CONDITION:
(1) THIS DEVICE MAY NOT CAUSE HARMFUL INTERFERENCE, AND
(2) THIS DEVICE MUST ACCEPT ANY INTERFERENCE RECEIVED, INCLUDING INTERFERENCE THAT MAY CAUSE UNDERSIRED OPERATION.

This equipment has been tested and found to comply with the limits for a Class B digital device, pursuant to part 15 of the FCC Rules. These limits are designed to provide reasonable protection against harmful interference in a residential installation.

This equipment generates, uses and can radiate radio frequency energy and, if not installed and used in accordance with the instructions, may cause harmful interference to radio communication. However, there is no guarantee that interference will not occur in a particular installation. If this equipment does cause harmful interference to radio or television reception, which can be determined by turning the equipment off and on, the user is encouraged to try to correct the interference by one or more of the following measures :

- Reorient or relocate the receiving antenna.

- Increase the separation between the equipment and receiver.

- Connect the equipment into an outlet on a circuit difference from that to which the receiver is connected.

- Consult the dealer of an experienced radio/TV technician for help.

NOTE : The manufacturer is not responsible for any radio or TV interference caused by unauthorized modifications to this equipment. Such modifications could void the user’s authority to operate the equipment.