No.	NAME
A1	RF TRX
1	GND(USB GND)
2	USB D+
3	USB D-
4	USB VBUS
5	Power Supply
6	Reserved
7	Synchronisation Clock
8	Manufacture Specific
9	Reserved
10	GND
T1	Charge Terminal(+)
T2	Charge Terminal(-)

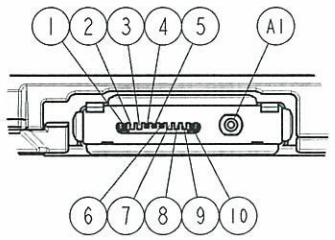

S=2:1

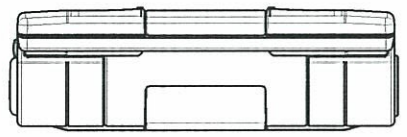

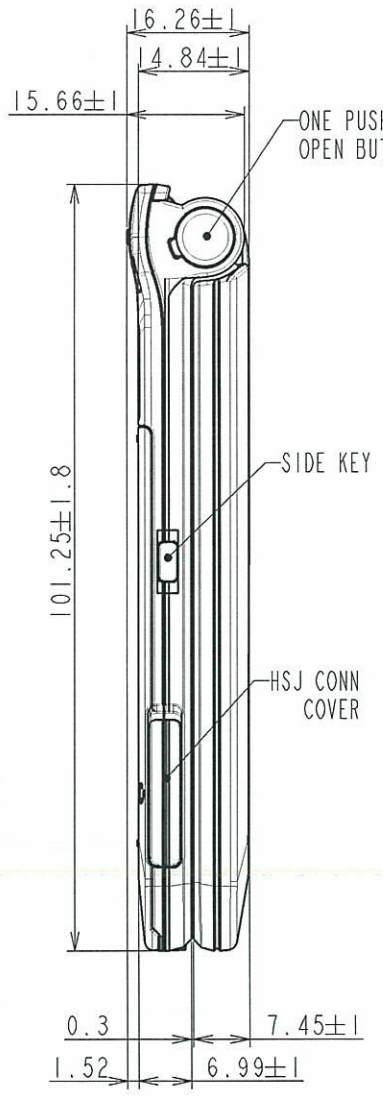

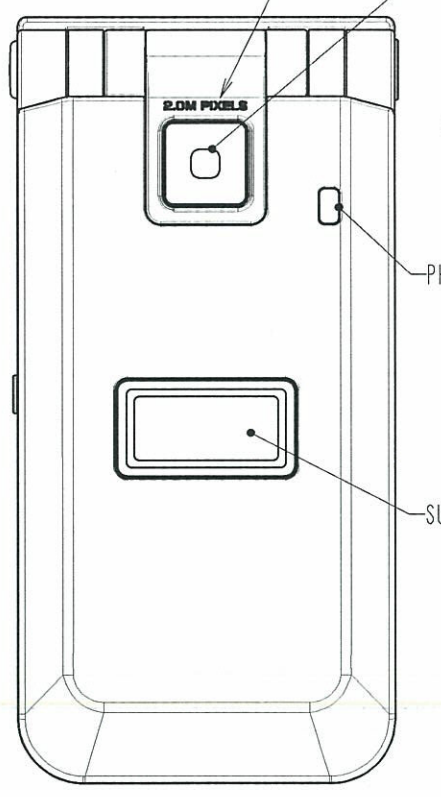

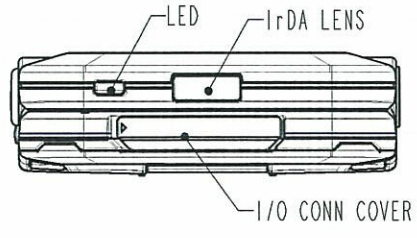

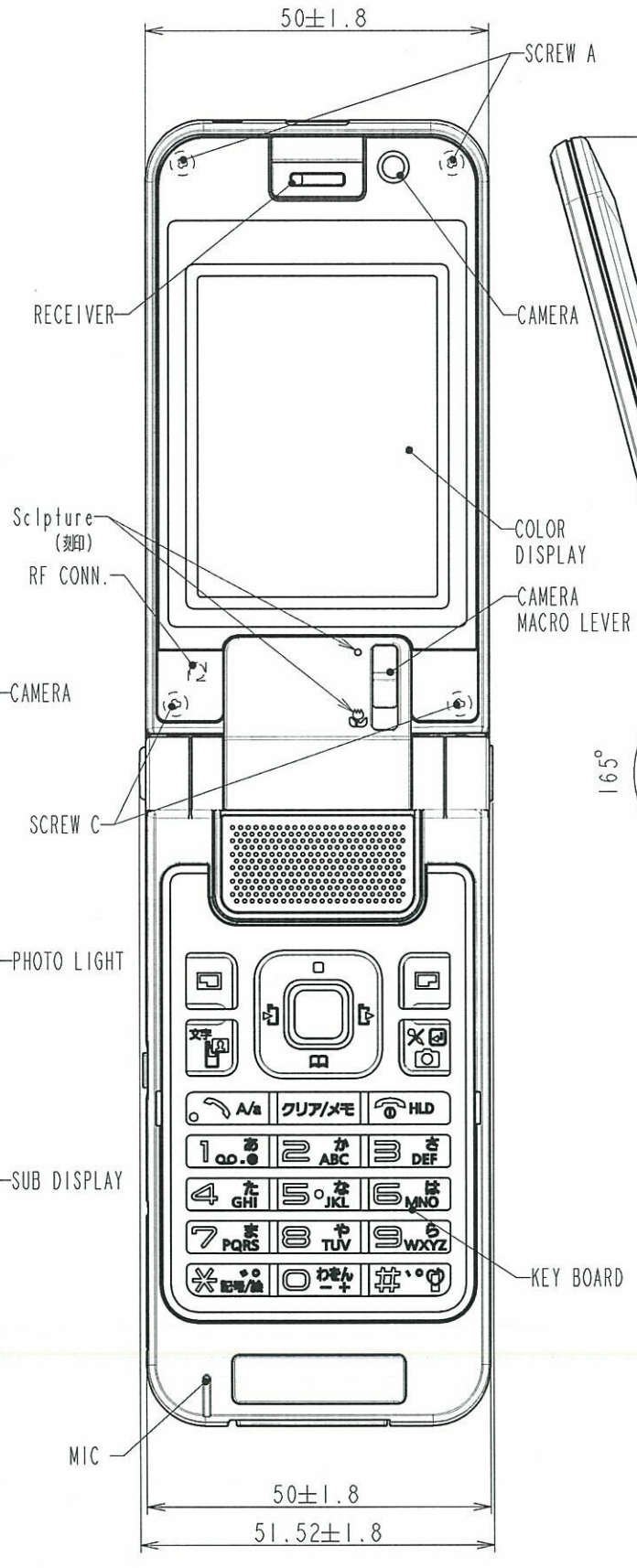

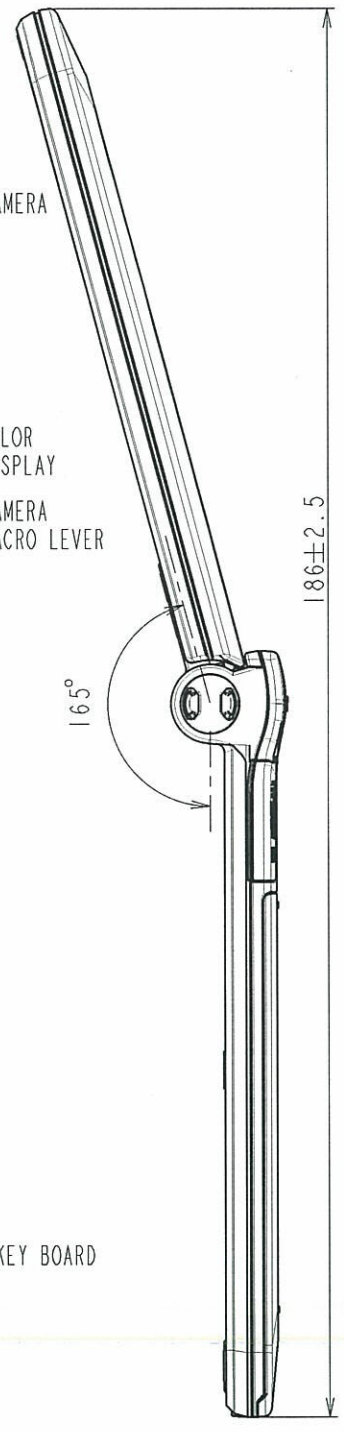

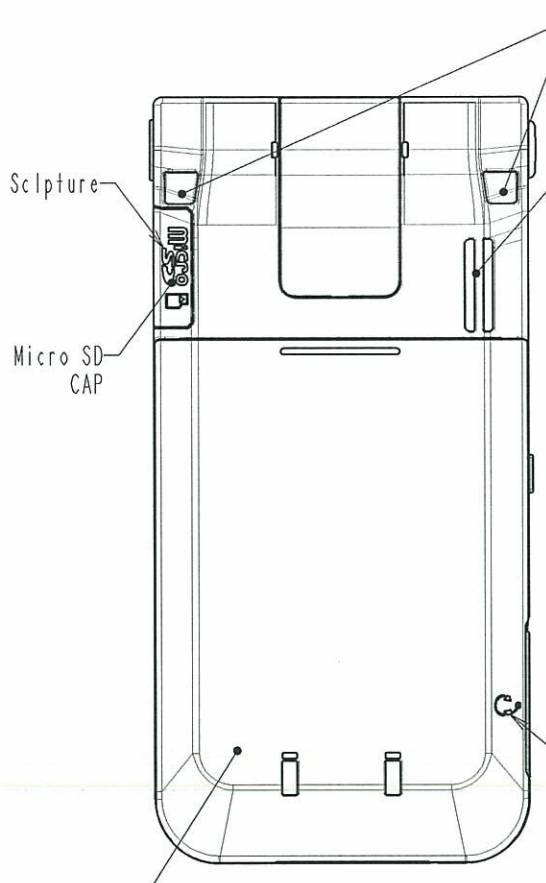

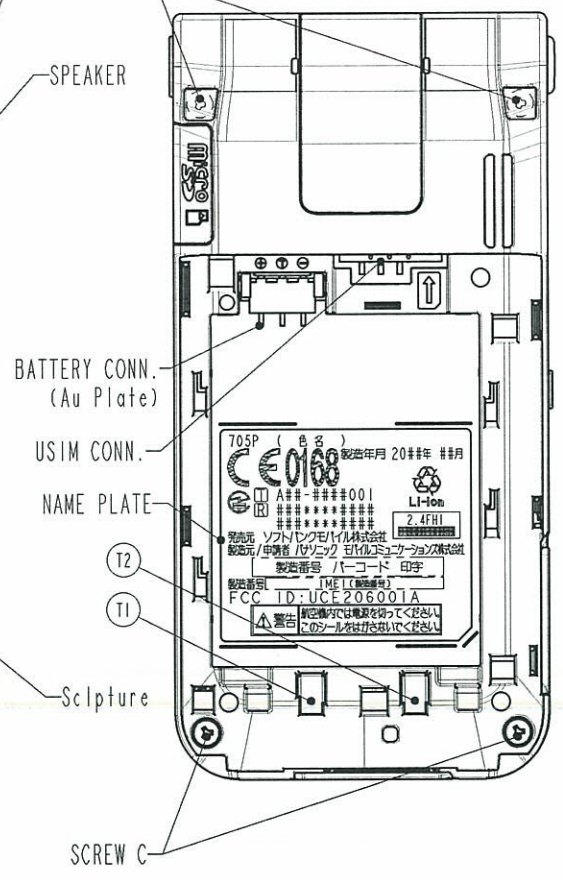

DETAIL of SCREW

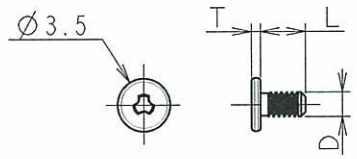

S=2:1

	SCREW A	SCREW B	SCREW C (TAP SCREW)
QTY	2	2	4
T	0.6	0.6	0.6
L	3	4	4
D	M1.6	M1.6	Nomina diameter 2

SYM.	DATE	REVISION	SIGNED	CHECKED
3				
2				
1				

Unit:mm

third angle system

MATERIAL & SIZE		PROCESS		REMARK
SCALE	DESIGNED	DRAWN	CHECKED	APPROVED
1:1	FUKUHARA 19-Junr-06	NAGANO 19-Jun-06		

MODEL	705P
TITLE	COSMETIC SPECIFICATION
DRAWING NO.	C2181278A
REF. NO.	1/1

A3 MCS-A-1262A 000818

Panasonic Mobile Communications Co., Ltd.

Model File Name/VS70_COSME_TOP_ASSY
DWG File Name/VS70_COSMETIC_SPECIFICATION_ETE

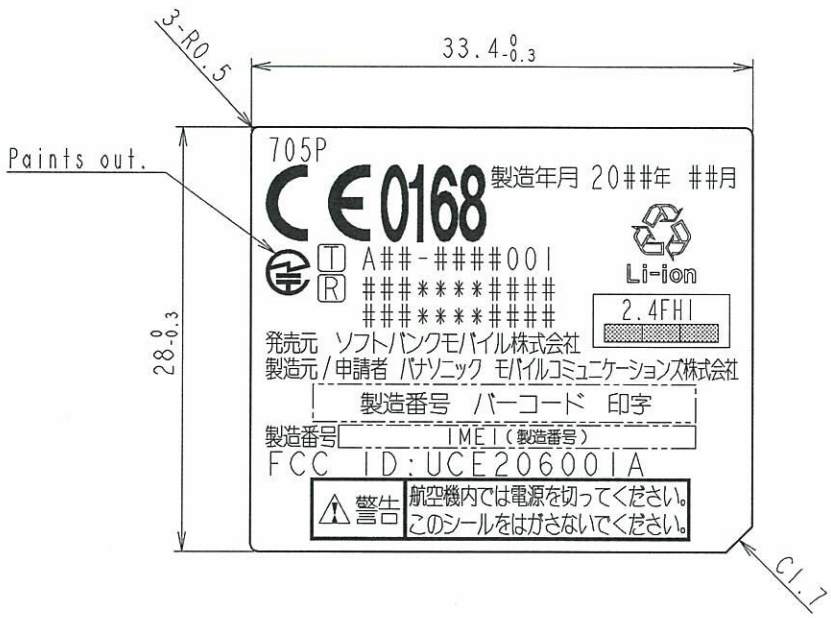

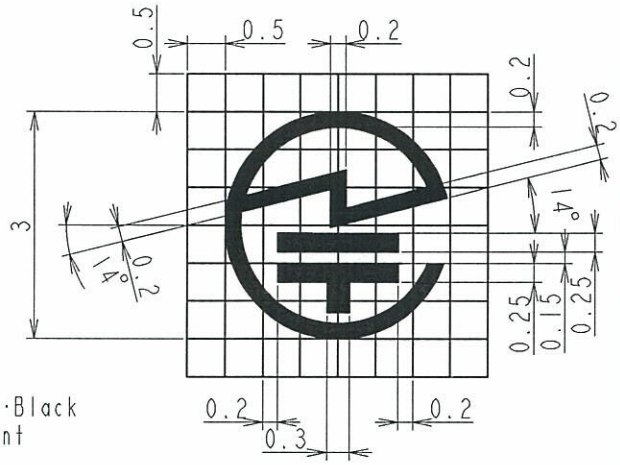

SCALE 10:1

Character style of type
製造元,パナソニック モバイルコミュニケーションズ株式会社 uses Gona D.
"警告" sentece uses the Gothic type.
Others use Narl D.

Colors
Foundation·····White
Character,Recognition mark,Company's logo etc·····Black
Manufactured date,Character,Barcode·····Black print

Recognition and Proof No.
*:Alphabet, #:Numeral

Material
Name plate·····Fine quarity paper(White)
Adhesive·····Acrylic resin paste

About IMEI
14 first digits·····Manufacturer's serial number
1 last digit·····Check digit

□□□□□□□□□□□□□□□
14 first digits: Manufacturer's serial number
1 last digit:Check digit

SYM.	DATE	REVISION	SIGNED	CHECKED
3				
2				
1				

Unit:mm
third angle system

MATERIAL & SIZE	PROCESS	REMARK

SCALE	DESIGNED	DRAWN	CHECKED		APPROVED
2:1	N.NOZAKI 19-Jun-06	N.NOZAKI 19-Jun-06			

MODEL	705P
TITLE	NAME PLATE
DRAWING NO.	C2181279A
REF.NO.	1/1

A4 MCS-A-1261A 000818 Model File Name/VS70_NAME-PLATE_EB3091
DWG File Name/VS70_NAME-PLATE_E

Panasonic Mobile Communications Co., Ltd.