SAR TEST REPORT

Test Report No. : 10636726H-K-R3

Applicant	:	**Panasonic Mobile Communications Development of Europe Ltd**
Type of Equipment	:	**Digital Camera**
Model No.	:	**DMC-CM1**
FCC ID	:	**UCE314062A**
Test regulation	:	**FCC47CFR 2.1093**
Test Result	:	**Complied**

Reported SAR(1g) Value

The highest reported SAR(1g)

WWAN	Head	: 0.468W/kg
	Body	: 1.511W/kg
WWAN+WLAN :		1.513W/kg

1. This test report shall not be reproduced in full or partial, without the written approval of UL Japan, Inc.
2. The results in this report apply only to the sample tested.
3. This sample tested is in compliance with the limits of the above regulation.
4. The test results in this report are traceable to the national or international standards.
5. This test report must not be used by the customer to claim product certification, approval, or endorsement by NVLAP, NIST, or any agency of the Federal Government.
6. This test report covers SAR technical requirements. It does not cover administrative issues such as Manual or non-SAR test related Requirements. (if applicable)
7. This report is a revised version of 10636726H-K-R2. 10636726H-K-R2 is replaced with this report.

Date of test: January 15 to February 6, 2015

Representative test engineer: T. Nakagawa

Tomohisa Nakagawa
Engineer
Consumer Technology Division

Approved by : T. Hatakeda

Takahiro Hatakeda
Leader
Consumer Technology Division

NVLAP LAB CODE: 200572-0

This laboratory is accredited by the NVLAP LAB CODE 200572-0, U.S.A. The tests reported herein have been performed in accordance with its terms of accreditation.
*As for the range of Accreditation in NVLAP, you may refer to the WEB address, http://www.ul.com/japan/jpn/pages/services/emc/about/mark1/index.jsp#nvlap

REVISION HISTORY

Original Test Report No.: 10636726H-K

Revision	Test report No.	Date	Page revised	Contents
- (Original)	10636726H-K	February 20, 2015	-	-
1	10636726H-K-R1	March 5, 2015	P.4	Correction of rating
1	10636726H-K-R1	March 5, 2015	P.6	Correction of KDB procedures
1	10636726H-K-R1	March 5, 2015	P.54	Correction of column “position” for WWAN LTE V and WWAN LTE XVII in the table
2	10636726H-K-R2	March 9, 2015	P.11	Addition of Output power operating modes
2	10636726H-K-R2	March 9, 2015	P.103-106	Addition of unit and Correction of test data
3	10636726H-K-R3	March 19, 2015	P.7	Correction of KDB941225D06 version
3	10636726H-K-R3	March 19, 2015	P.10	Addition of explanatory note for Hotspot mode
3	10636726H-K-R3	March 19, 2015	P.424, 426-429	Addition of word “Ear Reference Point” in SAR Setup Photo

CONTENTS **PAGE**

SECTION 1: CUSTOMER INFORMATION **5**
SECTION 2: EQUIPMENT UNDER TEST (E.U.T.) **5**
2.1 IDENTIFICATION OF E.U.T. 5
2.2 PRODUCT DESCRIPTION 5
SECTION 3 : TEST STANDARD INFORMATION **7**
3.1 TEST SPECIFICATION 7
3.2 PROCEDURE 7
3.3 EXPOSURE LIMIT 8
3.4 TEST LOCATION 8
SECTION 4 : TEST RESULT **9**
4.1 STAND-ALONE SAR RESULT 9
4.2 SIMULTANEOUS TRANSMISSION SAR RESULT 10
SECTION 5 : DESCRIPTION OF THE OPERATING MODE **11**
5.1 OUTPUT POWER OPERATING MODES 11
5.2 OUTPUT POWER MEASUREMENT RESULTS 14
5.3 CONFIRMATION AFTER SAR TESTING 56
SECTION 6 SAR TEST EXCLUSION CONSIDERATIONS **57**
6.1 STANDALONE SAR TEST EXCLUSION CONSIDERATIONS 57
SECTION 7: DESCRIPTION OF THE SAR MEASUREMENT SETUP **59**
7.1 TEST POSITION FOR HEAD SETUP 59
7.2 TEST POSITION FOR BODY-WORN AND BODY(HOTSPOT) SETUP 61
SECTION 8 : TEST SURROUNDING **62**
8.1 MEASUREMENT UNCERTAINTY 62
SECTION 9 : MEASUREMENT RESULTS **63**
9.1 GSM850 HEAD SAR 63
9.2 GSM850 BODY-WORN AND BODY(HOTSPOT) SAR 65
9.3 PCS1900 HEAD SAR 67
9.4 PCS1900 BODY-WORN AND BODY (HOTSPOT) SAR 69
9.5 WCDMA BAND II HEAD SAR 71
9.6 WCDMA BAND II BODY-WORN AND BODY(HOTSPOT) SAR 72
9.7 WCDMA BAND IV HEAD SAR 74
9.8 WCDMA BAND IV BODY-WORN AND BODY(HOTSPOT) SAR 75
9.9 WCDMA BAND V HEAD SAR 77
9.10 WCDMA BAND V BODY-WORN AND BODY(HOTSPOT) SAR 78
9.11 LTE BAND II HEAD SAR 80
9.12 LTE BAND II BODY-WORN AND BODY(HOTSPOT) SAR 82
9.13 LTE BAND IV HEAD SAR 85
9.14 LTE BAND IV BODY-WORN AND BODY(HOTSPOT) SAR 87
9.15 LTE BAND V HEAD SAR 89
9.16 LTE BAND V BODY-WORN AND BODY(HOTSPOT) SAR 91
9.17 LTE BAND VII HEAD SAR 94
9.18 LTE BAND VII BODY-WORN AND BODY(HOTSPOT) SAR 96
9.19 LTE BAND XVII HEAD SAR 99
9.20 LTE BAND XVII BODY-WORN AND BODY(HOTSPOT) SAR 101
SECTION 10 SIMULTANEOUS TRANSMISSION ANALYSIS **103**
10.1 SUM OF THE SAR FOR GSM & WLAN 103
10.2 SUM OF THE SAR FOR WCDMA & WLAN 104
10.3 SUM OF THE SAR FOR LTE BAND II, IV & WLAN 105
10.4 SUM OF THE SAR FOR LTE BAND V, VII, XVII & WLAN 106
SECTION 11 TEST INSTRUMENTS **107**
APPENDIX 1 : SAR MEASUREMENT DATA **109**
APPENDIX 2 : SYSTEM CHECK **273**

APPENDIX 3 : SYSTEM SPECIFICATIONS 386
APPENDIX 4: PHOTOGRAPHS OF TEST SETUP 424

SECTION 1: Customer information

Company Name	:	Panasonic Mobile Communications Development of Europe Ltd
Address	:	Willoughby Road, Bracknell Berkshire RG12 8FP, UK
Telephone Number	:	+44 (0) 1344 706774
Facsimile Number	:	+44 (0) 1344 706796
Contact Person	:	Andrew James

SECTION 2: Equipment under test (E.U.T.)

2.1 Identification of E.U.T.

Type of Equipment	:	Digital Camera
Model No.	:	DMC-CM1
Serial No.	:	004401221416395
Rating	:	AC120V/60Hz (AC Adaptor) DC3.8V (Battery)
Option Battery	:	None
Body-worn Accessary	:	Typical Earphone
Receipt Date of Sample	:	January 7, 2015
Country of Mass-production	:	China
Condition of EUT	:	Production prototype (Not for Sale: This sample is equivalent to mass-produced items.)
Modification of EUT	:	No Modification by the test lab

2.2 Product description

General Specification

Power Supply (radio part input)	:	Cellular PA: 3.0V-4.2V (Depend on Battery voltage) Cellular other RF part: 1.3V, 1.8V, 2.05V, 2.7V (Regulated voltage) WLAN 5GHz Front-end module: 3.0V-4.2V (Depend on Battery voltage) WLAN/BT other RF part: 1.3V, 1.8V, 3.0V (Regulated voltage)
Clock frequency(ies) in the system	:	2.26GHz (Max) See below table for other clock frequencies

Frequency	Device
32.768kHz	MSM8974AB
32.768kHz (X'tal)	BUYD2206
27.0MHz	TC358764AXBG, XO2-256-64UCBGA, BUYD2206
48.0MHz (X'tal)	WCN3680
24.0MHz	MSM8974AB, Sub Camera
19.2MHz	WTR1625L, MSM8974AB
19.2MHz (X'tal)	PM8941
9.6MHz	WCD9320
72MHz	Main Camera
27.12MHz	NFC IC

Hardware / Software version	:	Rev. PR / QRCT Version 3.0.32.0

Radio Specification

	IEEE802.11b	IEEE802.11g/n (20 M band)	IEEE802.11a/n/ac (20 M band)	IEEE802.11n/ac (40 M band)	IEEE802.11ac (80 M band)
Frequency of operation	2412-2462MHz	2412-2462MHz	5180-5240MHz 5260-5320MHz 5500-5700MHz 5745-5825MHz	5190-5230MHz 5270-5310MHz 5510-5670MHz 5755-5795MHz	5210MHz 5290MHz 5530-5610MHz 5775MHz
Type of modulation	DSSS (CCK, DQPSK, DBPSK)	OFDM-CCK (64QAM, 16QAM, QPSK, BPSK)	OFDM (64QAM, 16QAM, QPSK, BPSK)		OFDM (64QAM, 16QAM, QPSK, BPSK, 256QAM)
Channel spacing	5MHz		20MHz	40MHz	80MHz
Antenna type	Monopole				
Antenna Connector type	Spring type				
Antenna Gain	2.4GHz: -5.40dBi W52: -3.0dBi, W53: -3.5dBi, W56: -1.5dBi, W58: -1.8dBi				

	Bluetooth Ver.4.0 with EDR function	GSM	W-CDMA	LTE
Frequency of operation	2402-2480MHz	[Up Link] GSM850: 824 – 849MHz PCS: 1850 – 1910MHz [Down Link] GSM850: 869 – 894MHz PCS: 1930 – 1990MHz	[Up Link] Band II: 1850 – 1910MHz Band IV: 1710 – 1755MHz Band V: 824 – 849MHz [Down Link] Band II: 1930 – 1990MHz Band IV: 2110 – 2155MHz Band V: 869 – 894MHz	[Up Link] Band II: 1850 – 1910MHz Band IV: 1710 – 1755MHz Band V: 824 – 849MHz Band VII: 2500 – 2570MHz Band X VII: 704 – 716MHz [Down Link] Band II: 1930 – 1990MHz Band IV: 2110 – 2155MHz Band V: 869 – 894MHz Band VII: 2620 – 2690MHz Band X VII: 734 – 746MHz
Type of modulation	BT: FHSS (GFSK, π/4-DQPSK, 8-DPSK) LE: GFSK	GMSK , 8PSK	QPSK	QPSK, 16QAM
Channel spacing	BT: 1MHz, LE: 2MHz	200kHz	200kHz	100kHz
Antenna type	Monopole	Monopole	Main: Monopole Sub: Monopole	
Antenna Connector type	Spring type	Spring type	Main: Spring type Sub: Spring type	
Antenna Gain	-5.40dBi	GSM850: -0.9dBi PCS: 0.5dBi	Band II: 0.5dBi Band IV: 0.6dBi Band V: -0.9dBi	Band II: 0.5dBi Band IV: 0.6dBi Band V: -0.9dBi Band VII: -0.2dBi Band X VII: -1.5dBi

	NFC	GPS/GLONASS
Frequency of operation	13.56MHz	GPS: 1575.42MHz GLONASS: 1597.55-1605.89MHz
Type of modulation	ASK	GPS: BPSK GLONASS: BPSK
Channel spacing	-	GLONASS: 0.5625MHz
Antenna type	Loop	Monopole
Antenna Connector type	Spring type	Spring type
Antenna Gain	N/A	-2.9dBi

*This test report applies for WWAN.

SECTION 3 : Test standard information

3.1 Test Specification

Title : **FCC47CFR 2.1093**
Radiofrequency radiation exposure evaluation: portable devices.
: **IEEE Std 1528-2003:**
IEEE Recommended Practice for Determining the Peak Spatial-Average Specific Absorption Rate (SAR) in the Human Head from Wireless Communications Devices.

: **Published RF exposure KDB procedures**

☑	**KDB447498D01(v05r02)**	Mobile and Portable Device RF Exposure Procedures and Equipment Authorization Policies
☐	**KDB447498D02(v02)**	SAR Measurement Procedures for USB Dongle Transmitters
☑	**KDB648474D04(v01r02)**	SAR Evaluation Considerations for Wireless Handsets
☑	**KDB941225D01(v03)**	3G SAR Measurement Procedures
☑	**KDB941225D05(v02r03)**	SAR for LTE Devices
☑	**KDB941225D06(v02r01)**	SAR test procedures for devices incorporating SAR Evaluation Procedures for Portable Devices with Wireless Router Capabilities (Hot Spot SAR)
☐	**KDB941225D07(v01r01)**	SAR Evaluation Procedures for UMPC Mini-Tablet Devices
☐	**KDB616217D04(v01r01)**	SAR Evaluation Considerations for Laptop, Notebook, Netbook and Tablet Computers
☑	**KDB865664D01(v01r03)**	SAR Measurement Requirements for 100MHz to 6 GHz
☑	**KDB248227D01(v01r02)**	SAR Measurement Procedures for 802.11a//b/g Transmitters

Reference
[1]SPEAG uncertainty document (AN 15-7/AN19-17) for DASY 5 System from SPEAG (Schmid & Partner Engineering AG).
[2] IEEE Std 1528-2013: IEEE Recommended Practice for Determining the Peak Spatial-Average Specific Absorption Rate (SAR) in the Human Head from Wireless Communications Devices: Measurement Techniques.
(The reference for Uncertainty in SAR correction for deviations in permittivity and conductivity, in clause E.3.2.)

3.2 Procedure

Transmitter	**WWAN**
Test Procedure	Published RF exposure KDB procedures
	SAR
Category	FCC47CFR 2.1093
Note: UL Japan, Inc. 's SAR Work Procedures 13-EM-W0429 and 13-EM-W0430	

3.3 Exposure limit

(A) Limits for Occupational/Controlled Exposure (W/kg)

Spatial Average (averaged over the whole body)	Spatial Peak (averaged over any 1g of tissue)	Spatial Peak (hands/wrists/feet/ankles averaged over 10g)
0.4	8.0	20.0

(B) Limits for General population/Uncontrolled Exposure (W/kg)

Spatial Average (averaged over the whole body	Spatial Peak (averaged over any 1g of tissue)	Spatial Peak (hands/wrists/feet/ankles averaged over 10g)
0.08	1.6	4.0

Occupational/Controlled Environments: are defined as locations where there is exposure that may be incurred by people who are aware of the potential for exposure, (i.e. as a result of employment or occupation).

General Population/Uncontrolled Environments: are defined as locations where there is the exposure of individuals who have no knowledge or control of their exposure.

NOTE:GENERAL POPULATION/UNCONTROLLED EXPOSURE
SPATIAL PEAK(averaged over any 1g of tissue) LIMIT
1.6 W/kg

3.4 Test Location

*Shielded room for SAR testings
UL Japan, Inc. Ise EMC Lab. *NVLAP Lab. code: 200572-0
4383-326Asama-cho, Ise-shi, Mie-ken 516-0021 JAPAN
Telephone : +81 596 24 8999 Facsimile : +81 596 24 8124

SECTION 4 : Test result

4.1 Stand-alone SAR result

Reported SAR

Measured SAR is scaled to the maximum tune-up tolerance limit by the following formulas.
Reported SAR= Maximum tune-up tolerance limit [mW] / Measured power [mW] · Measured SAR [W/kg]
Maximum tune-up tolerance limit is by the specification from a customer.

Position	Mode	Frequency	Measured power [mW]*1	Maximum tune-up tolerance limit	Measured SAR [W/kg]	Reported SAR [W/kg]
Head	LTE Band VII QPSK 50%RB	2510MHz	165.96	251.19	0.309	0.468
Body-worn Body(Hotspot)	PCS1900 GPRS 2slots	1909.8MHz	134.28	189.64	1.07	1.511

Note
*1 The sample used by the SAR test is within the tune-up tolerance but not more than 2 dB lower than the maximum tune-up tolerance limit. That is, measured power is included the tune-up tolerance range.

WWAN Maximum tune-up tolerance limit

・GSM

		1slots (dBm) Burst	2slots(dBm) Burst	1slots (dBm) Frame	2slots (dBm) Frame
GSM850	GSM	34.0		24.98	
	GPRS	34.0	32.0	24.98	25.98
	EGPRS	28.7	26.5	19.67	20.48
PCS	GSM	31.0		21.98	
	GPRS	31.0	28.8	21.98	22.78
	EGPRS	27.5	25.3	18.47	19.28

・WCDMA

		Normal Mode(dBm)	Hot Spot Mode(dBm)	Power Reduction(dB)
		RMC/HSDPA/HSUPA	RMC/HSDPA/HSUPA	
WCDMA	B2	24.0	21.5	-2.5
	B4	24.0	21.5	-2.5
	B5	24.0		

・LTE

		Normal Mode(dBm)	Hot Spot Mode(dBm)	Power Reduction(dB)
LTE	B2	24.0	21.5	-2.5
	B4	24.0	21.5	-2.5
	B5	24.0		
	B7	24.0	19.0	-5.0
	B17	24.0		

Note
* When WLAN tethering function(Hotspot mode) is activated, WWAN transmit power is reduced.
This function is adapted to WCDMA Band 2, 4 and LTE Band 2, 4, 7.

4.2 Simultaneous transmission SAR result

This EUT has the unlicensed transmitter such as WLAN (802.11a/b/g/n) & Bluetooth devices besides licensed transmitter WWAN (GSM/WCDMA/LTE), and the following simultaneous transmission is possible.

No.	Capable Tx configurations	Head	Body-worn	Product specific (Hotspot etc.)	Note
1	WWAN + WLAN	Yes	Yes	Yes	*1, *3
2	WWAN + Bluetooth	Exemption	Exemption	Exemption	*2, *4

*1 For Hotspot mode, WLAN is applicable with 2.4G tethering mode. When Hotspot mode is active, the EUT can originate a voice call.
*2 WLAN and Bluetooth cannot be transmitted simultaneously and Bluetooth power level was lower than WLAN
Please refer to the WLAN SAR report: 10636726H-J
*3 WLAN 2.4GHz and 5GHz cannot be transmitted simultaneously
*4 WLAN and Bluetooth cannot be transmitted simultaneously

Simultaneous transmission SAR result

Position	Mode	WWAN	WLAN	SUM of SAR [W/kg]
Head	LTE Band VII + WiFi 2.4G	0.468	0.234	0.702
Body-worn Body(Hotspot)	GSM 1900 + WiFi 2.4G	1.511	0.002	1.513

SECTION 5 : Description of the operating mode

5.1 Output power operating modes

WWAN(GSM/WCDMA)

Band	Duty cycle or Multi class(GSM)	Test Frequency	Mode
GSM850	Multi class 10	824.2MHz (128ch) 836.6MHz(190ch) 848.8MHz(251ch)	GSM GPRS (CS-1) EGPRS(MCS-5)
PCS1900	Multi class 10	1850.2MHz(512ch) 1880.0MHz(661ch) 1909.8MHz(810ch)	
WCDMA II	100%	1852.4MHz(9262ch) 1880.0MHz(9400ch) 1907.6MHz(9538ch)	12.2k RMC HSDPA DC-HSDPA HSUPA HSPA+
WCDMA IV	100%	1712.4MHz(1312ch) 1732.6MHz(1413ch) 1752.6MHz(1513ch)	
WCDMA V	100%	826.4MHz (4132ch) 836.6MHz(4183ch) 846.6MHz(4233ch)	
Setting			
The communication link was set up with the Wireless Communications Test Set (Agilent M/N: E5515C,Rohde & Schwarz M/N: CMW500). The EUT was command to operate at maximum transmit power. GSM850 :PCL 5 PCS1900 :PCL 0 W-CDMA:All up bits			

WWAN(LTE)

LTE Band	Duty cycle	Test Frequency		Mode
		Bandwidth	Frequency (channel)	
Band 2 (1850.7MHz-1909.3MHz)	100%	1.4MHz	1850.7MHz(18607ch) 1880MHz(18900ch) 1909.3MHz(19193ch)	QPSK 16QAM
		3MHz	1851.5MHz(18615ch) 1880MHz(18900ch) 1908.5MHz(19185ch)	
		5MHz	1852.5MHz(18625ch) 1880MHz(18900ch) 1907.5MHz(19175ch)	
		10MHz	1855MHz(18650ch) 1880MHz(18900ch) 1905MHz(19150ch)	
		15MHz	1857.5MHz(18675ch) 1880MHz(18900ch) 1902.5MHz(19125ch)	
		20MHz	1860MHz(18700ch) 1880MHz(18900ch) 1900MHz(19100ch)	
Band 4 (1710.7MHz-1754.3MHz)	100%	1.4MHz	1710.7MHz(19957ch) 1732.5MHz(20175ch) 1754.3MHz (20393ch)	QPSK 16QAM
		3MHz	1711.5MHz(19965ch) 1732.5MHz(20175ch) 1753.5MHz(20385ch)	
		5MHz	1712.5MHz(19975ch) 1732.5MHz(20175ch) 1752.5MHz(20375ch)	
		10MHz	1715.0MHz(20000ch) 1732.5MHz(20175ch) 1750.0MHz(20350ch)	
		15MHz	1717.5MHz(20025ch) 1732.5MHz(20175ch) 1747.5MHz(20325ch)	
		20MHz	1720.0MHz(20050ch) 1732.5MHz(20175ch) 1745.0MHz(20300ch)	
Band 5 (824.7MHz-848.3MHz)	100%	1.4MHz	824.7MHz(20407ch) 836.5MHz(20525ch) 848.3MHz(20643ch)	QPSK 16QAM
		3MHz	825.5MHz(20415ch) 836.5MHz(20525ch) 847.5MHz(20635ch)	
		5MHz	826.5MHz(20425ch) 836.5MHz(20525ch) 846.5MHz(20625ch)	
		10MHz	829MHz(20450ch) 836.5MHz(20525ch) 844MHz(20600ch)	

Bnad 7 (2502.5MHz- 2567.5MHz)	100%	5MHz	2502.5MHz(20775ch) 2535MHz(21100ch) 2567.5MHz(21425ch)	QPSK 16QAM
		10MHz	2505MHz(20800ch) 2535MHz(21100ch) 2565MHz(21400ch)	
		15MHz	2507.5MHz(20825ch) 2535MHz(21100ch) 2562.5MHz(21375ch)	
		20MHz	2510MHz(20850ch) 2535MHz(21100ch) 2560MHz(21350ch)	
Bnad 17 (706.5MHz-713.5MHz)	100%	5MHz	706.5MHz(23755ch) 710.0MHz(23790ch) 713.5MHz(23825ch)	QPSK 16QAM
		10MHz	709.0MHz(23780ch) 710.0MHz(23790ch) 711MHz(23800ch)	
Setting				
The communication link was set up with the Wireless Communications Test Set (Rohde & Schwarz M/N: CMW500). The EUT was command to operate at maximum transmit power. LTE : All up bits				

5.2 Output power measurement results

GSM (GMSK) - Coding Scheme: CS1

Band	Ch No.	f (MHz)	1 Slot Power (dBm)		2 Slot Power (dBm)		3 Slot Power (dBm)	
			Burst Avg	Frame Avg	Burst Avg	Frame Avg	Burst Avg	Frame Avg
850	128	824.2	33.06	23.45	-	-	-	-
	190	836.6	32.89	23.33	-	-	-	-
	251	848.8	32.70	23.00	-	-	-	-

GPRS (GMSK) - Coding Scheme: CS1 (Multislot Class 10)

Band	Ch No.	f (MHz)	1 Slot Power (dBm)		2 Slot Power (dBm)		3 Slot Power (dBm)	
			Burst Avg	Frame Avg	Burst Avg	Frame Avg	Burst Avg	Frame Avg
850	128	824.2	33.06	23.33	31.40	24.60	-	-
	190	836.6	32.88	23.30	31.50	24.58	-	-
	251	848.8	32.69	23.21	31.14	24.51	-	-

EGPRS (8PSK) - Coding Scheme: MCS5 (Multislot Class 10)

Band	Ch No.	f (MHz)	1 Slot Power (dBm)		2 Slot Power (dBm)		3 Slot Power (dBm)	
			Burst Avg	Frame Avg	Burst Avg	Frame Avg	Burst Avg	Frame Avg
850	128	824.2	29.13	18.71	27.42	20.00	-	-
	190	836.6	28.94	18.58	27.25	19.97	-	-
	251	848.8	28.66	19.03	27.00	20.30	-	-

GSM (GMSK) - Coding Scheme: CS1

Band	Ch No.	f (MHz)	1 Slot Power (dBm)		2 Slot Power (dBm)		3 Slot Power (dBm)		4 Slot Power (dBm)	
			Burst Avg	Frame Avg	Burst Avg	Frame Avg	Burst Avg	Frame Avg	Burst Avg	Frame Avg
1900	512	1850.2	30.52	19.84	-	-	-	-	-	-
	661	1880	30.51	19.89	-	-	-	-	-	-
	810	1909.8	30.23	19.80	-	-	-	-	-	-

GPRS (GMSK) - Coding Scheme: CS1

Band	Ch No.	f (MHz)	1 Slot Power (dBm)		2 Slot Power (dBm)		3 Slot Power (dBm)		4 Slot Power (dBm)	
			Burst Avg	Frame Avg	Burst Avg	Frame Avg	Burst Avg	Frame Avg	Burst Avg	Frame Avg
1900	512	1850.2	30.49	19.69	28.41	21.47	-	-	-	-
	661	1880	30.47	19.70	28.33	21.49	-	-	-	-
	810	1909.8	30.20	19.69	28.02	21.28	-	-	-	-

EGPRS (8PSK) - Coding Scheme: MCS5

Band	Ch No.	f (MHz)	1 Slot Power (dBm)		2 Slot Power (dBm)		3 Slot Power (dBm)		4 Slot Power (dBm)	
			Burst Avg	Frame Avg	Burst Avg	Frame Avg	Burst Avg	Frame Avg	Burst Avg	Frame Avg
1900	512	1850.2	26.30	16.42	25.27	18.40	-	-	-	-
	661	1880	26.48	16.50	25.37	18.55	-	-	-	-
	810	1909.8	25.72	15.88	24.58	17.83	-	-	-	-

Band	Mode	UL Ch No.	Freq. (MHz)	Avg Pwr (dBm)	
				Full Power	Reduced Power
UMTS Band II	Rel 99 (RMC, 12.2 kbps)	9262	1852.4	23.88	20.86
		9400	1880.0	23.68	20.66
		9538	1907.6	23.55	20.69

Band	Mode	UL Ch No.	Freq. (MHz)	Avg Pwr	
				Full Power	Reduced Power
UMTS Band II	HSDPA Subtest 1	9262	1852.4	22.84	19.93
		9400	1880.0	22.66	19.56
		9538	1907.6	22.67	19.63
	HSDPA Subtest 2	9262	1852.4	22.81	19.89
		9400	1880.0	22.66	19.66
		9538	1907.6	22.67	19.62
	HSDPA Subtest 3	9262	1852.4	22.31	19.40
		9400	1880.0	22.27	19.16
		9538	1907.6	22.18	19.12
	HSDPA Subtest 4	9262	1852.4	22.30	19.30
		9400	1880.0	22.25	19.16
		9538	1907.6	22.18	19.12

Band	Mode	UL Ch No.	Freq. (MHz)	Avg Pwr	
				Full Power	Reduced Power
UMTS Band II	DC-HSDPA Subtest 1	9262	1852.4	22.62	19.78
		9400	1880.0	22.68	19.64
		9538	1907.6	22.56	19.70
	DC-HSDPA Subtest 2	9262	1852.4	22.79	19.83
		9400	1880.0	22.66	19.70
		9538	1907.6	22.63	19.61
	DC-HSDPA Subtest 3	9262	1852.4	22.27	19.35
		9400	1880.0	22.15	19.17
		9538	1907.6	22.14	19.12
	DC-HSDPA Subtest 4	9262	1852.4	22.36	19.34
		9400	1880.0	22.15	19.20
		9538	1907.6	22.17	19.12

Band	Mode	UL Ch No.	Freq. (MHz)	Avg Pwr	
				Full Power	Reduced Power
UMTS Band II	HSUPA Subtest 1	9262	1852.4	22.50	19.05
		9400	1880.0	22.26	19.16
		9538	1907.6	22.27	19.22
	HSUPA Subtest 2	9262	1852.4	21.01	18.07
		9400	1880.0	21.07	18.05
		9538	1907.6	21.02	18.05
	HSUPA Subtest 3	9262	1852.4	21.30	18.37
		9400	1880.0	21.27	18.15
		9538	1907.6	21.38	18.32
	HSUPA Subtest 4	9262	1852.4	21.68	18.69
		9400	1880.0	21.53	18.45
		9538	1907.6	21.39	18.33
	HSUPA Subtest 5	9262	1852.4	22.70	19.81
		9400	1880.0	22.66	19.66
		9538	1907.6	22.65	19.57

Band	Mode	UL Ch No.	Freq. (MHz)	Avg Pwr	
				Full Power	Reduced Power
UMTS Band II	HSPA+ (16QAM) Subtest 1	9262	1852.4	20.84	17.60
		9400	1880.0	20.85	17.51
		9538	1907.6	20.85	17.71

Band	Mode	UL Ch No.	Freq. (MHz)	Avg Pwr (dBm)	
				Full Power	Reduced Power
UMTS Band IV	Rel 99 (RMC, 12.2 kbps)	1312	1712.4	23.47	20.82
		1413	1732.6	23.37	20.66
		1513	1752.6	23.25	20.73

Band	Mode	UL Ch No.	Freq. (MHz)	Avg Pwr	
				Full Power	Reduced Power
UMTS Band IV	HSDPA Subtest 1	1312	1712.4	22.51	19.76
		1413	1732.6	22.38	19.61
		1513	1752.6	22.41	19.59
	HSDPA Subtest 2	1312	1712.4	22.50	19.75
		1413	1732.6	22.32	19.64
		1513	1752.6	22.40	19.70
	HSDPA Subtest 3	1312	1712.4	22.07	19.27
		1413	1732.6	21.92	19.20
		1513	1752.6	22.01	19.20
	HSDPA Subtest 4	1312	1712.4	22.07	19.29
		1413	1732.6	21.92	19.19
		1513	1752.6	22.01	19.20

Band	Mode	UL Ch No.	Freq. (MHz)	Avg Pwr	
				Full Power	Reduced Power
UMTS Band IV	DC-HSDPA Subtest 1	1312	1712.4	22.44	19.41
		1413	1732.6	22.09	19.26
		1513	1752.6	22.23	19.58
	DC-HSDPA Subtest 2	1312	1712.4	22.61	19.80
		1413	1732.6	22.44	19.62
		1513	1752.6	22.44	19.73
	DC-HSDPA Subtest 3	1312	1712.4	22.01	19.32
		1413	1732.6	21.95	19.26
		1513	1752.6	21.98	19.28
	DC-HSDPA Subtest 4	1312	1712.4	22.08	19.34
		1413	1732.6	21.95	19.26
		1513	1752.6	21.97	19.24

Band	Mode	UL Ch No.	Freq. (MHz)	Avg Pwr	
				Full Power	Reduced Power
UMTS Band IV	HSUPA Subtest 1	1312	1712.4	22.45	19.56
		1413	1732.6	22.33	19.14
		1513	1752.6	22.09	19.39
	HSUPA Subtest 2	1312	1712.4	21.58	18.73
		1413	1732.6	21.42	18.66
		1513	1752.6	21.40	18.67
	HSUPA Subtest 3	1312	1712.4	21.07	18.29
		1413	1732.6	20.95	18.18
		1513	1752.6	21.01	18.51
	HSUPA Subtest 4	1312	1712.4	22.07	19.24
		1413	1732.6	21.88	19.16
		1513	1752.6	21.86	19.14
	HSUPA Subtest 5	1312	1712.4	22.51	19.73
		1413	1732.6	22.39	19.56
		1513	1752.6	22.47	19.63

Band	Mode	UL Ch No.	Freq. (MHz)	Avg Pwr	
				Full Power	Reduced Power
UMTS Band IV	HSPA+ (16QAM) Subtest 1	1312	1712.4	20.71	17.65
		1413	1732.6	20.77	17.98
		1513	1752.6	20.56	17.71

Band	Mode	UL Ch No.	Freq. (MHz)	Avg Pwr (dBm)	
				Full Power	Reduced Power
UMTS Band V	Rel 99 (RMC, 12.2 kbps)	4132	826.4	23.78	-
		4183	836.6	23.65	-
		4233	846.6	23.66	-

Band	Mode	UL Ch No.	Freq. (MHz)	Avg Pwr	
				Full Power	Reduced Power
UMTS Band V	HSDPA Subtest 1	4132	826.4	22.81	-
		4183	836.6	22.74	-
		4233	846.6	22.64	-
	HSDPA Subtest 2	4132	826.4	22.80	-
		4183	836.6	22.73	-
		4233	846.6	22.63	-
	HSDPA Subtest 3	4132	826.4	22.30	-
		4183	836.6	22.24	-
		4233	846.6	22.14	-
	HSDPA Subtest 4	4132	826.4	22.30	-
		4183	836.6	22.24	-
		4233	846.6	22.13	-

Band	Mode	UL Ch No.	Freq. (MHz)	Avg Pwr	
				Full Power	Reduced Power
UMTS Band V	DC-HSDPA Subtest 1	4132	826.4	22.76	-
		4183	836.6	22.71	-
		4233	846.6	22.64	-
	DC-HSDPA Subtest 2	4132	826.4	22.85	-
		4183	836.6	22.77	-
		4233	846.6	22.72	-
	DC-HSDPA Subtest 3	4132	826.4	22.30	-
		4183	836.6	22.26	-
		4233	846.6	22.22	-
	DC-HSDPA Subtest 4	4132	826.4	22.30	-
		4183	836.6	22.26	-
		4233	846.6	22.22	-

Band	Mode	UL Ch No.	Freq. (MHz)	Avg Pwr	
				Full Power	Reduced Power
UMTS Band V	HSUPA Subtest 1	4132	826.4	22.65	-
		4183	836.6	22.45	-
		4233	846.6	22.27	-
	HSUPA Subtest 2	4132	826.4	21.13	-
		4183	836.6	21.11	-
		4233	846.6	21.04	-
	HSUPA Subtest 3	4132	826.4	21.35	-
		4183	836.6	21.33	-
		4233	846.6	21.27	-
	HSUPA Subtest 4	4132	826.4	22.26	-
		4183	836.6	21.44	-
		4233	846.6	21.36	-
	HSUPA Subtest 5	4132	826.4	22.77	-
		4183	836.6	22.75	-
		4233	846.6	22.63	-

Band	Mode	UL Ch No.	Freq. (MHz)	Avg Pwr	
				Full Power	Reduced Power
UMTS Band V	HSPA+ (16QAM) Subtest 1	4132	826.4	20.84	-
		4183	836.6	20.88	-
		4233	846.6	20.84	-

LTE Band 2, 20 MHz Bandwidth Output Power
Full Power (Tethering Off)

BW	Ch	Freq. (MHz)	Mode	UL RB Allocation	UL RB Start	Target MPR	Meas. MPR	Avg Pwr (dBm)
20	18700	1860	QPSK	1	0	0	0	22.96
				1	49	0	0	22.95
				1	99	0	0	22.84
				50	0	1	1	22.02
				50	24	1	1	22.06
				50	49	1	1	22.05
				100	0	1	1	22.04
			16QAM	1	0	1	1	22.14
				1	49	1	1	22.17
				1	99	1	1	22.06
				50	0	2	2	20.94
				50	24	2	2	21.02
				50	49	2	2	21.05
				100	0	2	2	21.04
	18900	1880	QPSK	1	0	0	0	22.70
				1	49	0	0	22.73
				1	99	0	0	22.66
				50	0	1	1	21.94
				50	24	1	1	21.87
				50	49	1	1	21.91
				100	0	1	1	21.85
			16QAM	1	0	1	1	21.92
				1	49	1	1	21.98
				1	99	1	1	21.92
				50	0	2	2	20.96
				50	24	2	2	20.89
				50	49	2	2	20.92
				100	0	2	2	20.88
	19100	1900	QPSK	1	0	0	0	22.59
				1	49	0	0	22.66
				1	99	0	0	22.77
				50	0	1	1	21.78
				50	24	1	1	21.80
				50	49	1	1	21.72
				100	0	1	1	21.85
			16QAM	1	0	1	1	21.81
				1	49	1	1	21.89
				1	99	1	1	22.03
				50	0	2	2	20.86
				50	24	2	2	20.85
				50	49	2	2	20.79
				100	0	2	2	20.91

Reduced Power (Tethering On)

BW	Ch	Freq. (MHz)	Mode	UL RB Allocation	UL RB Start	Target MPR	Meas. MPR	Avg Pwr (dBm)
20	18700	1860	QPSK	1	0	MPR is disabled when power reduction is enabled		20.45
				1	49			20.44
				1	99			20.37
				50	0			20.47
				50	24			20.48
				50	49			20.51
				100	0			20.55
			16QAM	1	0			20.62
				1	49			20.62
				1	99			20.54
				50	0			20.49
				50	24			20.55
				50	49			20.54
				100	0			20.59
	18900	1880	QPSK	1	0			20.15
				1	49			20.15
				1	99			20.14
				50	0			20.34
				50	24			20.27
				50	49			20.37
				100	0			20.32
			16QAM	1	0			20.44
				1	49			20.44
				1	99			20.35
				50	0			20.41
				50	24			20.32
				50	49			20.41
				100	0			20.37
	19100	1900	QPSK	1	0			20.01
				1	49			20.11
				1	99			20.25
				50	0			20.28
				50	24			20.28
				50	49			20.17
				100	0			20.29
			16QAM	1	0			20.27
				1	49			20.38
				1	99			20.45
				50	0			20.33
				50	24			20.27
				50	49			20.22
				100	0			20.34

LTE Band 2, 15 MHz Bandwidth Output Power
Full Power (Tethering Off)

BW	Ch	Freq. (MHz)	Mode	UL RB Allocation	UL RB Start	Target MPR	Meas. MPR	Avg Pwr (dBm)
15	18675	1857.5	QPSK	1	0	0	0	23.07
				1	37	0	0	23.00
				1	74	0	0	23.05
				36	0	1	1	22.02
				36	19	1	1	22.07
				36	39	1	1	22.17
				75	0	1	1	22.11
			16QAM	1	0	1	1	21.86
				1	37	1	1	21.87
				1	74	1	1	21.87
				36	0	2	2	20.92
				36	19	2	2	20.99
				36	39	2	2	21.05
				75	0	2	2	21.03
	18900	1880	QPSK	1	0	0	0	22.92
				1	37	0	0	22.89
				1	74	0	0	22.83
				36	0	1	1	21.88
				36	19	1	1	21.86
				36	39	1	1	21.88
				75	0	1	1	21.94
			16QAM	1	0	1	1	21.74
				1	37	1	1	21.67
				1	74	1	1	21.58
				36	0	2	2	20.80
				36	19	2	2	20.78
				36	39	2	2	20.82
				75	0	2	2	20.88
	19125	1902.5	QPSK	1	0	0	0	22.88
				1	37	0	0	22.80
				1	74	0	0	22.93
				36	0	1	1	21.79
				36	19	1	1	21.90
				36	39	1	1	21.84
				75	0	1	1	21.90
			16QAM	1	0	1	1	21.60
				1	37	1	1	21.51
				1	74	1	1	21.68
				36	0	2	2	20.77
				36	19	2	2	20.79
				36	39	2	2	20.76
				75	0	2	2	20.81

Reduced Power (Tethering On)

BW	Ch	Freq. (MHz)	Mode	UL RB Allocation	UL RB Start	Target MPR	Meas. MPR	Avg Pwr (dBm)
15	18675	1857.5	QPSK	1	0	MPR is disabled when power reduction is enabled		20.53
				1	37			20.46
				1	74			20.53
				36	0			20.47
				36	19			20.49
				36	39			20.58
				75	0			20.48
			16QAM	1	0			20.32
				1	37			20.27
				1	74			20.29
				36	0			20.43
				36	19			20.45
				36	39			20.53
				75	0			20.54
	18900	1880	QPSK	1	0			20.41
				1	37			20.35
				1	74			20.25
				36	0			20.30
				36	19			20.32
				36	39			20.38
				75	0			20.35
			16QAM	1	0			20.15
				1	37			20.11
				1	74			20.01
				36	0			20.23
				36	19			20.29
				36	39			20.28
				75	0			20.27
	19125	1902.5	QPSK	1	0			20.34
				1	37			20.17
				1	74			20.35
				36	0			20.30
				36	19			20.32
				36	39			20.21
				75	0			20.36
			16QAM	1	0			20.08
				1	37			19.94
				1	74			20.16
				36	0			20.20
				36	19			20.22
				36	39			20.19
				75	0			20.28

LTE Band 2, 10 MHz Bandwidth Output Power

Full Power (Tethering Off)

BW	Ch	Freq. (MHz)	Mode	UL RB Allocation	UL RB Start	Target MPR	Meas. MPR	Avg Pwr (dBm)
10	18650	1855	QPSK	1	0	0	0	23.11
				1	24	0	0	23.01
				1	49	0	0	23.14
				25	0	1	1	22.13
				25	12	1	1	22.04
				25	24	1	1	22.12
				50	0	1	1	22.05
			16QAM	1	0	1	1	21.86
				1	24	1	1	21.78
				1	49	1	1	21.96
				25	0	2	2	21.03
				25	12	2	2	20.93
				25	24	2	2	20.95
				50	0	2	2	20.95
	18900	1880	QPSK	1	0	0	0	22.96
				1	24	0	0	22.91
				1	49	0	0	22.86
				25	0	1	1	21.86
				25	12	1	1	21.81
				25	24	1	1	21.92
				50	0	1	1	21.90
			16QAM	1	0	1	1	21.73
				1	24	1	1	21.62
				1	49	1	1	21.55
				25	0	2	2	20.80
				25	12	2	2	20.85
				25	24	2	2	20.84
				50	0	2	2	20.80
	19150	1905	QPSK	1	0	0	0	22.83
				1	24	0	0	22.81
				1	49	0	0	23.02
				25	0	1	1	21.87
				25	12	1	1	21.80
				25	24	1	1	21.81
				50	0	1	1	21.80
			16QAM	1	0	1	1	21.65
				1	24	1	1	21.56
				1	49	1	1	21.68
				25	0	2	2	20.83
				25	12	2	2	20.74
				25	24	2	2	20.84
				50	0	2	2	20.81

Reduced Power (Tethering On)

BW	Ch	Freq. (MHz)	Mode	UL RB Allocation	UL RB Start	Target MPR	Meas. MPR	Avg Pwr (dBm)
10	18650	1855	QPSK	1	0	MPR is disabled when power reduction is enabled		20.55
				1	24			20.46
				1	49			20.58
				25	0			20.56
				25	12			20.48
				25	24			20.53
				50	0			20.41
			16QAM	1	0			20.34
				1	24			20.23
				1	49			20.36
				25	0			20.53
				25	12			20.41
				25	24			20.50
				50	0			20.44
	18900	1880	QPSK	1	0			20.41
				1	24			20.36
				1	49			20.34
				25	0			20.33
				25	12			20.29
				25	24			20.34
				50	0			20.33
			16QAM	1	0			20.20
				1	24			20.09
				1	49			20.01
				25	0			20.29
				25	12			20.27
				25	24			20.33
				50	0			20.34
	19150	1905	QPSK	1	0			20.31
				1	24			20.18
				1	49			20.42
				25	0			20.31
				25	12			20.17
				25	24			20.22
				50	0			20.19
			16QAM	1	0			20.05
				1	24			19.95
				1	49			20.13
				25	0			20.25
				25	12			20.16
				25	24			20.24
				50	0			20.19

LTE Band 2, 5 MHz Bandwidth Output Power
Full Power (Tethering Off)

BW	Ch	Freq. (MHz)	Mode	UL RB Allocation	UL RB Start	Target MPR	Meas. MPR	Avg Pwr (dBm)
5	18625	1852.5	QPSK	1	0	0	0	22.93
				1	12	0	0	22.94
				1	24	0	0	22.89
				12	0	1	1	22.04
				12	6	1	1	22.11
				12	11	1	1	22.10
				25	0	1	1	22.13
			16QAM	1	0	1	1	21.89
				1	12	1	1	21.88
				1	24	1	1	21.83
				12	0	2	2	21.02
				12	6	2	2	21.05
				12	11	2	2	21.05
				25	0	2	2	21.10
	18900	1880	QPSK	1	0	0	0	22.95
				1	12	0	0	22.87
				1	24	0	0	22.88
				12	0	1	1	21.87
				12	6	1	1	21.83
				12	11	1	1	21.83
				25	0	1	1	21.83
			16QAM	1	0	1	1	21.70
				1	12	1	1	21.63
				1	24	1	1	21.70
				12	0	2	2	20.88
				12	6	2	2	20.85
				12	11	2	2	20.85
				25	0	2	2	20.92
	19175	1907.5	QPSK	1	0	0	0	22.81
				1	12	0	0	22.81
				1	24	0	0	22.95
				12	0	1	1	21.83
				12	6	1	1	21.76
				12	11	1	1	21.85
				25	0	1	1	21.81
			16QAM	1	0	1	1	21.57
				1	12	1	1	21.57
				1	24	1	1	21.71
				12	0	2	2	20.83
				12	6	2	2	20.84
				12	11	2	2	20.87
				25	0	2	2	20.88

Reduced Power (Tethering On)

BW	Ch	Freq. (MHz)	Mode	UL RB Allocation	UL RB Start	Target MPR	Meas. MPR	Avg Pwr (dBm)
5	18625	1852.5	QPSK	1	0	MPR is disabled when power reduction is enabled		20.42
				1	12			20.39
				1	24			20.34
				12	0			20.51
				12	6			20.48
				12	11			20.48
				25	0			20.51
			16QAM	1	0			20.26
				1	12			20.29
				1	24			20.24
				12	0			20.55
				12	6			20.53
				12	11			20.54
				25	0			20.61
	18900	1880	QPSK	1	0			20.38
				1	12			20.31
				1	24			20.37
				12	0			20.34
				12	6			20.30
				12	11			20.29
				25	0			20.30
			16QAM	1	0			20.14
				1	12			20.05
				1	24			20.13
				12	0			20.30
				12	6			20.32
				12	11			20.31
				25	0			20.39
	19175	1907.5	QPSK	1	0			20.22
				1	12			20.27
				1	24			20.38
				12	0			20.21
				12	6			20.25
				12	11			20.26
				25	0			20.28
			16QAM	1	0			20.01
				1	12			20.03
				1	24			20.14
				12	0			20.27
				12	6			20.31
				12	11			20.31
				25	0			20.38

LTE Band 2, 3 MHz Bandwidth Output Power
Full Power (Tethering Sensor Off)

BW	Ch	Freq. (MHz)	Mode	UL RB Allocation	UL RB Start	Target MPR	Meas. MPR	Avg Pwr (dBm)
3	18615	1851.5	QPSK	1	0	0	0	23.13
				1	7	0	0	23.09
				1	14	0	0	23.21
				8	0	1	1	22.10
				8	4	1	1	22.06
				8	7	1	1	22.11
				15	0	1	1	22.14
			16QAM	1	0	1	1	21.93
				1	7	1	1	21.83
				1	14	1	1	21.91
				8	0	2	2	21.03
				8	4	2	2	21.04
				8	7	2	2	21.04
				15	0	2	2	21.04
	18900	1880	QPSK	1	0	0	0	22.90
				1	7	0	0	22.92
				1	14	0	0	22.94
				8	0	1	1	21.87
				8	4	1	1	21.85
				8	7	1	1	21.87
				15	0	1	1	21.84
			16QAM	1	0	1	1	21.68
				1	7	1	1	21.66
				1	14	1	1	21.66
				8	0	2	2	20.85
				8	4	2	2	20.84
				8	7	2	2	20.85
				15	0	2	2	20.88
	19185	1908.5	QPSK	1	0	0	0	22.88
				1	7	0	0	22.87
				1	14	0	0	23.03
				8	0	1	1	21.84
				8	4	1	1	21.83
				8	7	1	1	21.87
				15	0	1	1	21.82
			16QAM	1	0	1	1	21.63
				1	7	1	1	21.63
				1	14	1	1	21.69
				8	0	2	2	20.83
				8	4	2	2	20.83
				8	7	2	2	20.85
				15	0	2	2	20.87

Reduced Power (Tethering On)

BW	Ch	Freq. (MHz)	Mode	UL RB Allocation	UL RB Start	Target MPR	Meas. MPR	Avg Pwr (dBm)
3	18615	1851.5	QPSK	1	0	MPR is disabled when power reduction is enabled		20.58
				1	7			20.52
				1	14			20.58
				8	0			20.55
				8	4			20.52
				8	7			20.51
				15	0			20.52
			16QAM	1	0			20.35
				1	7			20.29
				1	14			20.33
				8	0			20.54
				8	4			20.52
				8	7			20.54
				15	0			20.54
	18900	1880	QPSK	1	0			20.41
				1	7			20.33
				1	14			20.46
				8	0			20.55
				8	4			20.52
				8	7			20.51
				15	0			20.52
			16QAM	1	0			20.11
				1	7			20.10
				1	14			20.12
				8	0			20.36
				8	4			20.30
				8	7			20.33
				15	0			20.33
	19185	1908.5	QPSK	1	0			20.31
				1	7			20.32
				1	14			20.44
				8	0			20.32
				8	4			20.33
				8	7			20.28
				15	0			20.31
			16QAM	1	0			20.08
				1	7			20.07
				1	14			20.18
				8	0			20.29
				8	4			20.28
				8	7			20.33
				15	0			20.34

LTE Band 2, 1.4 MHz Bandwidth Output Power
Full Power (Tethering Off)

BW	Ch	Freq. (MHz)	Mode	UL RB Allocation	UL RB Start	Target MPR	Meas. MPR	Avg Pwr (dBm)
1.4	18607	1850.7	QPSK	1	0	0	0	23.07
				1	2	0	0	22.99
				1	5	0	0	23.06
				3	0	0	0	23.13
				3	1	0	0	23.09
				3	3	0	0	23.01
				6	0	1	1	22.15
			16QAM	1	0	1	1	22.17
				1	2	1	1	22.12
				1	5	1	1	22.16
				3	0	1	1	22.04
				3	1	1	1	22.00
				3	3	1	1	22.00
				6	0	2	2	21.09
	18900	1880	QPSK	1	0	0	0	22.91
				1	2	0	0	22.80
				1	5	0	0	22.87
				3	0	0	0	22.86
				3	1	0	0	22.85
				3	3	0	0	22.86
				6	0	1	1	21.87
			16QAM	1	0	1	1	21.91
				1	2	1	1	21.86
				1	5	1	1	21.86
				3	0	1	1	21.78
				3	1	1	1	21.77
				3	3	1	1	21.75
				6	0	2	2	20.92
	19193	1909.3	QPSK	1	0	0	0	22.92
				1	2	0	0	22.83
				1	5	0	0	22.92
				3	0	0	0	22.86
				3	1	0	0	22.93
				3	3	0	0	22.90
				6	0	1	1	21.88
			16QAM	1	0	1	1	21.89
				1	2	1	1	21.85
				1	5	1	1	21.86
				3	0	1	1	21.81
				3	1	1	1	21.78
				3	3	1	1	21.77
				6	0	2	2	20.92

Reduced Power (Tethering On)

BW	Ch	Freq. (MHz)	Mode	UL RB Allocation	UL RB Start	Target MPR	Meas. MPR	Avg Pwr (dBm)
1.4	18607	1850.7	QPSK	1	0	MPR is disabled when power reduction is enabled		20.58
				1	2			20.45
				1	5			20.53
				3	0			20.57
				3	1			20.54
				3	3			20.52
				6	0			20.58
			16QAM	1	0			20.60
				1	2			20.55
				1	5			20.60
				3	0			20.48
				3	1			20.45
				3	3			20.44
				6	0			20.57
	18900	1880	QPSK	1	0			20.34
				1	2			20.30
				1	5			20.35
				3	0			20.34
				3	1			20.33
				3	3			20.32
				6	0			20.36
			16QAM	1	0			20.34
				1	2			20.32
				1	5			20.37
				3	0			20.25
				3	1			20.26
				3	3			20.26
				6	0			20.40
	19193	1909.3	QPSK	1	0			20.35
				1	2			20.27
				1	5			20.35
				3	0			20.30
				3	1			20.29
				3	3			20.32
				6	0			20.38
			16QAM	1	0			20.32
				1	2			20.29
				1	5			20.31
				3	0			20.23
				3	1			20.22
				3	3			20.22
				6	0			20.40

LTE Band 4, 20 MHz Bandwidth Output Power
Full Power (Tethering Off)

BW	Ch	Freq. (MHz)	Mode	UL RB Allocation	UL RB Start	Target MPR	Meas. MPR	Avg Pwr (dBm)
20	20050	1720	QPSK	1	0	0	0	22.79
				1	49	0	0	22.79
				1	99	0	0	22.87
				50	0	1	1	21.99
				50	24	1	1	21.87
				50	49	1	1	21.89
				100	0	1	1	21.88
			16QAM	1	0	1	1	21.97
				1	49	1	1	22.00
				1	99	1	1	22.06
				50	0	2	2	20.99
				50	24	2	2	20.93
				50	49	2	2	20.89
				100	0	2	2	20.91
	20175	1732.5	QPSK	1	0	0	0	22.67
				1	49	0	0	22.71
				1	99	0	0	22.78
				50	0	1	1	21.74
				50	24	1	1	21.88
				50	49	1	1	21.94
				100	0	1	1	21.90
			16QAM	1	0	1	1	21.94
				1	49	1	1	21.94
				1	99	1	1	22.06
				50	0	2	2	20.81
				50	24	2	2	20.90
				50	49	2	2	20.99
				100	0	2	2	20.87
	20300	1745	QPSK	1	0	0	0	22.64
				1	49	0	0	22.78
				1	99	0	0	22.74
				50	0	1	1	21.86
				50	24	1	1	21.87
				50	49	1	1	21.79
				100	0	1	1	21.88
			16QAM	1	0	1	1	21.87
				1	49	1	1	22.00
				1	99	1	1	21.94
				50	0	2	2	20.89
				50	24	2	2	20.95
				50	49	2	2	20.91
				100	0	2	2	20.93

Reduced Power (Tethering On)

BW	Ch	Freq. (MHz)	Mode	UL RB Allocation	UL RB Start	Target MPR	Meas. MPR	Avg Pwr (dBm)
20	20050	1720	QPSK	1	0	MPR is disabled when power reduction is enabled		20.29
				1	49			20.33
				1	99			20.42
				50	0			20.45
				50	24			20.40
				50	49			20.34
				100	0			20.45
			16QAM	1	0			20.50
				1	49			20.48
				1	99			20.58
				50	0			20.51
				50	24			20.42
				50	49			20.44
				100	0			20.45
	20175	1732.5	QPSK	1	0			20.17
				1	49			20.23
				1	99			20.22
				50	0			20.26
				50	24			20.37
				50	49			20.41
				100	0			20.36
			16QAM	1	0			20.41
				1	49			20.44
				1	99			20.52
				50	0			20.37
				50	24			20.39
				50	49			20.44
				100	0			20.39
	20300	1745	QPSK	1	0			20.10
				1	49			20.26
				1	99			20.18
				50	0			20.32
				50	24			20.42
				50	49			20.30
				100	0			20.37
			16QAM	1	0			20.34
				1	49			20.48
				1	99			20.43
				50	0			20.40
				50	24			20.45
				50	49			20.41
				100	0			20.42

LTE Band 4, 15 MHz Bandwidth Output Power
Full Power (Tethering Off)

BW	Ch	Freq. (MHz)	Mode	UL RB Allocation	UL RB Start	Target MPR	Meas. MPR	Avg Pwr (dBm)
15	20025	1717.5	QPSK	1	0	0	0	22.91
				1	37	0	0	22.82
				1	74	0	0	22.84
				36	0	1	1	22.02
				36	19	1	1	21.95
				36	39	1	1	21.89
				75	0	1	1	22.02
			16QAM	1	0	1	1	21.66
				1	37	1	1	21.71
				1	74	1	1	21.70
				36	0	2	2	20.89
				36	19	2	2	20.84
				36	39	2	2	20.79
				75	0	2	2	20.93
	20175	1732.5	QPSK	1	0	0	0	22.88
				1	37	0	0	22.83
				1	74	0	0	22.91
				36	0	1	1	21.76
				36	19	1	1	21.83
				36	39	1	1	21.91
				75	0	1	1	21.94
			16QAM	1	0	1	1	21.71
				1	37	1	1	21.66
				1	74	1	1	21.64
				36	0	2	2	20.78
				36	19	2	2	20.81
				36	39	2	2	20.91
				75	0	2	2	20.89
	20325	1747.5	QPSK	1	0	0	0	22.87
				1	37	0	0	22.84
				1	74	0	0	22.85
				36	0	1	1	21.85
				36	19	1	1	21.95
				36	39	1	1	21.84
				75	0	1	1	21.83
			16QAM	1	0	1	1	21.59
				1	37	1	1	21.60
				1	74	1	1	21.60
				36	0	2	2	20.89
				36	19	2	2	20.89
				36	39	2	2	20.84
				75	0	2	2	20.86

Reduced Power (Tethering On)

BW	Ch	Freq. (MHz)	Mode	UL RB Allocation	UL RB Start	Target MPR	Meas. MPR	Avg Pwr (dBm)
15	20025	1717.5	QPSK	1	0	MPR is disabled when power reduction is enabled		20.43
				1	37			20.43
				1	74			20.41
				36	0			20.47
				36	19			20.39
				36	39			20.33
				75	0			20.47
			16QAM	1	0			20.20
				1	37			20.16
				1	74			20.17
				36	0			20.43
				36	19			20.40
				36	39			20.34
				75	0			20.48
	20175	1732.5	QPSK	1	0			20.39
				1	37			20.33
				1	74			20.40
				36	0			20.31
				36	19			20.34
				36	39			20.41
				75	0			20.41
			16QAM	1	0			20.14
				1	37			20.11
				1	74			20.13
				36	0			20.31
				36	19			20.33
				36	39			20.40
				75	0			20.41
	20325	1747.5	QPSK	1	0			20.35
				1	37			20.31
				1	74			20.33
				36	0			20.37
				36	19			20.41
				36	39			20.32
				75	0			20.37
			16QAM	1	0			20.13
				1	37			20.09
				1	74			20.08
				36	0			20.35
				36	19			20.36
				36	39			20.32
				75	0			20.36

LTE Band 4, 10 MHz Bandwidth Output Power
Full Power (Tethering Off)

BW	Ch	Freq. (MHz)	Mode	UL RB Allocation	UL RB Start	Target MPR	Meas. MPR	Avg Pwr (dBm)
10	20000	1715	QPSK	1	0	0	0	22.95
				1	24	0	0	22.89
				1	49	0	0	23.00
				25	0	1	1	21.91
				25	12	1	1	21.96
				25	24	1	1	21.87
				50	0	1	1	21.98
			16QAM	1	0	1	1	21.73
				1	24	1	1	21.64
				1	49	1	1	21.78
				25	0	2	2	20.92
				25	12	2	2	20.90
				25	24	2	2	20.91
				50	0	2	2	20.98
	20175	1732.5	QPSK	1	0	0	0	22.88
				1	24	0	0	22.88
				1	49	0	0	22.92
				25	0	1	1	21.80
				25	12	1	1	21.85
				25	24	1	1	21.87
				50	0	1	1	21.88
			16QAM	1	0	1	1	21.69
				1	24	1	1	21.65
				1	49	1	1	21.64
				25	0	2	2	20.77
				25	12	2	2	20.84
				25	24	2	2	20.91
				50	0	2	2	20.85
	20350	1750	QPSK	1	0	0	0	22.90
				1	24	0	0	22.91
				1	49	0	0	22.88
				25	0	1	1	21.78
				25	12	1	1	21.82
				25	24	1	1	21.82
				50	0	1	1	21.85
			16QAM	1	0	1	1	21.67
				1	24	1	1	21.61
				1	49	1	1	21.53
				25	0	2	2	20.83
				25	12	2	2	20.79
				25	24	2	2	20.89
				50	0	2	2	20.87

Reduced Power (Tethering On)

BW	Ch	Freq. (MHz)	Mode	UL RB Allocation	UL RB Start	Target MPR	Meas. MPR	Avg Pwr (dBm)
10	20000	1715	QPSK	1	0	MPR is disabled when power reduction is enabled		20.51
				1	24			20.43
				1	49			20.50
				25	0			20.49
				25	12			20.50
				25	24			20.43
				50	0			20.51
			16QAM	1	0			20.25
				1	24			20.14
				1	49			20.22
				25	0			20.49
				25	12			20.44
				25	24			20.38
				50	0			20.51
	20175	1732.5	QPSK	1	0			20.47
				1	24			20.37
				1	49			20.38
				25	0			20.29
				25	12			20.38
				25	24			20.41
				50	0			20.38
			16QAM	1	0			20.19
				1	24			20.11
				1	49			20.16
				25	0			20.32
				25	12			20.31
				25	24			20.43
				50	0			20.38
	20350	1750	QPSK	1	0			20.43
				1	24			20.34
				1	49			20.36
				25	0			20.30
				25	12			20.33
				25	24			20.38
				50	0			20.29
			16QAM	1	0			20.14
				1	24			20.06
				1	49			20.07
				25	0			20.25
				25	12			20.31
				25	24			20.33
				50	0			20.30

LTE Band 4, 5 MHz Bandwidth Output Power
Full Power (Tethering Off)

BW	Ch	Freq. (MHz)	Mode	UL RB Allocation	UL RB Start	Target MPR	Meas. MPR	Avg Pwr (dBm)
5	19975	1712.5	QPSK	1	0	0	0	22.93
				1	12	0	0	22.94
				1	24	0	0	22.90
				12	0	1	1	21.91
				12	6	1	1	21.97
				12	11	1	1	21.99
				25	0	1	1	21.94
			16QAM	1	0	1	1	21.72
				1	12	1	1	21.72
				1	24	1	1	21.70
				12	0	2	2	20.99
				12	6	2	2	20.99
				12	11	2	2	20.99
				25	0	2	2	21.01
	20175	1732.5	QPSK	1	0	0	0	22.78
				1	12	0	0	22.80
				1	24	0	0	22.89
				12	0	1	1	21.86
				12	6	1	1	21.78
				12	11	1	1	21.88
				25	0	1	1	21.83
			16QAM	1	0	1	1	21.60
				1	12	1	1	21.59
				1	24	1	1	21.72
				12	0	2	2	20.88
				12	6	2	2	20.91
				12	11	2	2	20.90
				25	0	2	2	20.95
	20375	1752.5	QPSK	1	0	0	0	22.82
				1	12	0	0	22.86
				1	24	0	0	22.82
				12	0	1	1	21.81
				12	6	1	1	21.79
				12	11	1	1	21.75
				25	0	1	1	21.73
			16QAM	1	0	1	1	21.60
				1	12	1	1	21.62
				1	24	1	1	21.60
				12	0	2	2	20.91
				12	6	2	2	20.90
				12	11	2	2	20.81
				25	0	2	2	20.87

Reduced Power (Tethering On)

BW	Ch	Freq. (MHz)	Mode	UL RB Allocation	UL RB Start	Target MPR	Meas. MPR	Avg Pwr (dBm)
5	19975	1712.5	QPSK	1	0	MPR is disabled when power reduction is enabled		20.43
				1	12			20.44
				1	24			20.41
				12	0			20.44
				12	6			20.42
				12	11			20.49
				25	0			20.45
			16QAM	1	0			20.15
				1	12			20.18
				1	24			20.18
				12	0			20.48
				12	6			20.46
				12	11			20.51
				25	0			20.57
	20175	1732.5	QPSK	1	0			20.30
				1	12			20.33
				1	24			20.42
				12	0			20.34
				12	6			20.37
				12	11			20.38
				25	0			20.33
			16QAM	1	0			20.11
				1	12			20.10
				1	24			20.20
				12	0			20.38
				12	6			20.39
				12	11			20.40
				25	0			20.41
	20375	1752.5	QPSK	1	0			20.30
				1	12			20.31
				1	24			20.26
				12	0			20.31
				12	6			20.32
				12	11			20.27
				25	0			20.28
			16QAM	1	0			20.12
				1	12			20.11
				1	24			20.12
				12	0			20.36
				12	6			20.37
				12	11			20.30
				25	0			20.30

LTE Band 4, 3 MHz Bandwidth Output Power
Full Power (Tethering Off)

BW	Ch	Freq. (MHz)	Mode	UL RB Allocation	UL RB Start	Target MPR	Meas. MPR	Avg Pwr (dBm)
3	19965	1711.5	QPSK	1	0	0	0	22.96
				1	7	0	0	22.94
				1	14	0	0	23.06
				8	0	1	1	21.94
				8	4	1	1	21.91
				8	7	1	1	21.97
				15	0	1	1	21.98
			16QAM	1	0	1	1	21.78
				1	7	1	1	21.73
				1	14	1	1	21.78
				8	0	2	2	20.95
				8	4	2	2	20.93
				8	7	2	2	20.97
				15	0	2	2	20.96
	20175	1732.5	QPSK	1	0	0	0	22.90
				1	7	0	0	22.87
				1	14	0	0	22.97
				8	0	1	1	21.87
				8	4	1	1	21.84
				8	7	1	1	21.84
				15	0	1	1	21.86
			16QAM	1	0	1	1	21.68
				1	7	1	1	21.65
				1	14	1	1	21.71
				8	0	2	2	20.87
				8	4	2	2	20.86
				8	7	2	2	20.87
				15	0	2	2	20.89
	20385	1753.5	QPSK	1	0	0	0	22.95
				1	7	0	0	22.81
				1	14	0	0	22.89
				8	0	1	1	21.77
				8	4	1	1	21.65
				8	7	1	1	21.75
				15	0	1	1	21.71
			16QAM	1	0	1	1	21.68
				1	7	1	1	21.53
				1	14	1	1	21.60
				8	0	2	2	20.88
				8	4	2	2	20.77
				8	7	2	2	20.78
				15	0	2	2	20.78

Reduced Power (Tethering On)

BW	Ch	Freq. (MHz)	Mode	UL RB Allocation	UL RB Start	Target MPR	Meas. MPR	Avg Pwr (dBm)
3	19965	1711.5	QPSK	1	0	MPR is disabled when power reduction is enabled		20.48
				1	7			20.49
				1	14			20.53
				8	0			20.37
				8	4			20.35
				8	7			20.40
				15	0			20.46
			16QAM	1	0			20.22
				1	7			20.21
				1	14			20.26
				8	0			20.47
				8	4			20.45
				8	7			20.48
				15	0			20.47
	20175	1732.5	QPSK	1	0			20.34
				1	7			20.37
				1	14			20.43
				8	0			20.30
				8	4			20.33
				8	7			20.36
				15	0			20.34
			16QAM	1	0			20.13
				1	7			20.08
				1	14			20.17
				8	0			20.35
				8	4			20.34
				8	7			20.36
				15	0			20.35
	20385	1753.5	QPSK	1	0			20.36
				1	7			20.30
				1	14			20.32
				8	0			20.28
				8	4			20.18
				8	7			20.21
				15	0			20.19
			16QAM	1	0			20.12
				1	7			19.98
				1	14			20.06
				8	0			20.33
				8	4			20.19
				8	7			20.23
				15	0			20.22

LTE Band 4, 1.4 MHz Bandwidth Output Power
Full Power (Tethering Off)

BW	Ch	Freq. (MHz)	Mode	UL RB Allocation	UL RB Start	Target MPR	Meas. MPR	Avg Pwr (dBm)
1.4	19957	1710.7	QPSK	1	0	0	0	22.98
				1	2	0	0	22.89
				1	5	0	0	22.92
				3	0	0	0	22.96
				3	1	0	0	22.97
				3	3	0	0	22.89
				6	0	1	1	22.02
			16QAM	1	0	1	1	22.03
				1	2	1	1	21.97
				1	5	1	1	22.03
				3	0	1	1	21.94
				3	1	1	1	21.90
				3	3	1	1	21.88
				6	0	2	2	21.00
	20175	1732.5	QPSK	1	0	0	0	22.86
				1	2	0	0	22.81
				1	5	0	0	22.85
				3	0	0	0	22.83
				3	1	0	0	22.83
				3	3	0	0	22.84
				6	0	1	1	21.87
			16QAM	1	0	1	1	21.85
				1	2	1	1	21.82
				1	5	1	1	21.86
				3	0	1	1	21.78
				3	1	1	1	21.77
				3	3	1	1	21.78
				6	0	2	2	20.95
	20393	1754.3	QPSK	1	0	0	0	22.84
				1	2	0	0	22.74
				1	5	0	0	22.81
				3	0	0	0	22.80
				3	1	0	0	22.78
				3	3	0	0	22.79
				6	0	1	1	21.72
			16QAM	1	0	1	1	21.86
				1	2	1	1	21.82
				1	5	1	1	21.84
				3	0	1	1	21.74
				3	1	1	1	21.73
				3	3	1	1	21.72
				6	0	2	2	20.87

Reduced Power (Tethering On)

BW	Ch	Freq. (MHz)	Mode	UL RB Allocation	UL RB Start	Target MPR	Meas. MPR	Avg Pwr (dBm)
1.4	19957	1710.7	QPSK	1	0	MPR is disabled when power reduction is enabled		20.43
				1	2			20.38
				1	5			20.42
				3	0			20.46
				3	1			20.48
				3	3			20.41
				6	0			20.46
			16QAM	1	0			20.55
				1	2			20.48
				1	5			20.52
				3	0			20.40
				3	1			20.34
				3	3			20.38
				6	0			20.53
	20175	1732.5	QPSK	1	0			20.35
				1	2			20.31
				1	5			20.35
				3	0			20.29
				3	1			20.31
				3	3			20.35
				6	0			20.37
			16QAM	1	0			20.41
				1	2			20.35
				1	5			20.41
				3	0			20.32
				3	1			20.27
				3	3			20.27
				6	0			20.40
	20393	1754.3	QPSK	1	0			20.31
				1	2			20.23
				1	5			20.25
				3	0			20.25
				3	1			20.26
				3	3			20.26
				6	0			20.26
			16QAM	1	0			20.26
				1	2			20.26
				1	5			20.32
				3	0			20.16
				3	1			20.17
				3	3			20.16
				6	0			20.29

LTE Band 5, 10 MHz Bandwidth Output Power
Full Power

BW	Ch	Freq. (MHz)	Mode	UL RB Allocation	UL RB Start	Target MPR	Meas. MPR	Avg Pwr (dBm)
10	20450	829	QPSK	1	0	0	0	22.91
				1	24	0	0	22.74
				1	49	0	0	22.69
				25	0	1	1	21.69
				25	12	1	1	21.68
				25	24	1	1	21.65
				50	0	1	1	21.68
			16QAM	1	0	1	1	21.68
				1	24	1	1	21.48
				1	49	1	2	21.41
				25	0	2	2	20.74
				25	12	2	2	20.72
				25	24	2	2	20.70
				50	0	2	2	20.70
	20525	836.5	QPSK	1	0	0	0	22.62
				1	24	0	0	22.83
				1	49	0	0	22.74
				25	0	1	1	21.66
				25	12	1	1	21.65
				25	24	1	1	21.65
				50	0	1	1	21.64
			16QAM	1	0	1	1	21.39
				1	24	1	1	21.47
				1	49	1	1	21.53
				25	0	2	2	20.69
				25	12	2	2	20.63
				25	24	2	2	20.70
				50	0	2	2	20.64
	20600	844	QPSK	1	0	0	0	22.66
				1	24	0	0	22.70
				1	49	0	0	22.75
				25	0	1	1	21.61
				25	12	1	1	21.63
				25	24	1	1	21.65
				50	0	1	1	21.65
			16QAM	1	0	1	1	21.40
				1	24	1	1	21.39
				1	49	1	1	21.48
				25	0	2	2	20.64
				25	12	2	2	20.67
				25	24	2	2	20.70
				50	0	2	2	20.68

LTE Band 5, 5 MHz Bandwidth Output Power
Full Power

BW	Ch	Freq. (MHz)	Mode	UL RB Allocation	UL RB Start	Target MPR	Meas. MPR	Avg Pwr (dBm)
5	20425	826.5	QPSK	1	0	0	0	22.84
				1	12	0	0	22.67
				1	24	0	0	22.73
				12	0	1	1	21.76
				12	6	1	1	21.72
				12	11	1	1	21.72
				25	0	1	1	21.72
			16QAM	1	0	1	1	21.56
				1	12	1	1	21.49
				1	24	1	1	21.51
				12	0	2	2	20.77
				12	6	2	2	20.77
				12	11	2	2	20.78
				25	0	2	2	20.79
	20525	836.5	QPSK	1	0	0	0	22.58
				1	12	0	0	22.62
				1	24	0	0	22.72
				12	0	1	1	21.61
				12	6	1	1	21.64
				12	11	1	1	21.60
				25	0	1	1	21.60
			16QAM	1	0	1	2	21.34
				1	12	1	1	21.43
				1	24	1	1	21.48
				12	0	2	2	20.70
				12	6	2	2	20.69
				12	11	2	2	20.67
				25	0	2	2	20.86
	20625	846.5	QPSK	1	0	0	0	22.65
				1	12	0	0	22.66
				1	24	0	0	22.71
				12	0	1	1	21.58
				12	6	1	1	21.58
				12	11	1	1	21.65
				25	0	1	1	21.63
			16QAM	1	0	1	1	21.42
				1	12	1	1	21.39
				1	24	1	1	21.47
				12	0	2	2	20.68
				12	6	2	2	20.71
				12	11	2	2	20.72
				25	0	2	2	20.74

LTE Band 5, 3 MHz Bandwidth Output Power
Full Power

BW	Ch	Freq. (MHz)	Mode	UL RB Allocation	UL RB Start	Target MPR	Meas. MPR	Avg Pwr (dBm)
3	20415	825.5	QPSK	1	0	0	0	22.90
				1	7	0	0	22.76
				1	14	0	0	22.80
				8	0	1	1	21.65
				8	4	1	1	21.65
				8	7	1	1	21.70
				15	0	1	1	21.75
			16QAM	1	0	1	1	21.67
				1	7	1	1	21.52
				1	14	1	1	21.55
				8	0	2	2	20.74
				8	4	2	2	20.75
				8	7	2	2	20.78
				15	0	2	2	20.78
	20525	836.5	QPSK	1	0	0	0	22.74
				1	7	0	0	22.71
				1	14	0	0	22.76
				8	0	1	1	21.65
				8	4	1	1	21.65
				8	7	1	1	21.63
				15	0	1	1	21.63
			16QAM	1	0	1	1	21.53
				1	7	1	1	21.47
				1	14	1	1	21.48
				8	0	2	2	20.73
				8	4	2	2	20.67
				8	7	2	2	20.67
				15	0	2	2	20.70
	20635	847.5	QPSK	1	0	0	0	22.69
				1	7	0	0	22.69
				1	14	0	0	22.73
				8	0	1	1	21.66
				8	4	1	1	21.64
				8	7	1	1	21.63
				15	0	1	1	21.60
			16QAM	1	0	1	1	21.47
				1	7	1	1	21.42
				1	14	1	1	21.46
				8	0	2	2	20.67
				8	4	2	2	20.66
				8	7	2	2	20.70
				15	0	2	2	20.71

LTE Band 5, 1.4 MHz Bandwidth Output Power
Full Power

BW	Ch	Freq. (MHz)	Mode	UL RB Allocation	UL RB Start	Target MPR	Meas. MPR	Avg Pwr (dBm)
1.4	20407	824.7	QPSK	1	0	0	0	22.83
				1	2	0	0	22.79
				1	5	0	0	22.79
				3	0	0	0	22.88
				3	1	0	0	22.85
				3	3	0	0	22.75
				6	0	1	1	21.80
			16QAM	1	0	1	1	21.93
				1	2	1	1	21.84
				1	5	1	1	21.77
				3	0	1	1	21.82
				3	1	1	1	21.77
				3	3	1	1	21.63
				6	0	2	2	20.86
	20525	836.5	QPSK	1	0	0	0	22.68
				1	2	0	0	22.61
				1	5	0	0	22.68
				3	0	0	0	22.59
				3	1	0	0	22.62
				3	3	0	0	22.69
				6	0	1	1	21.71
			16QAM	1	0	1	1	21.67
				1	2	1	1	21.63
				1	5	1	1	21.66
				3	0	1	1	21.58
				3	1	1	1	21.57
				3	3	1	1	21.58
				6	0	2	2	20.75
	20643	848.3	QPSK	1	0	0	0	22.65
				1	2	0	0	22.58
				1	5	0	0	22.62
				3	0	0	0	22.60
				3	1	0	0	22.64
				3	3	0	0	22.63
				6	0	1	1	21.63
			16QAM	1	0	1	1	21.70
				1	2	1	1	21.64
				1	5	1	1	21.68
				3	0	1	1	21.55
				3	1	1	1	21.56
				3	3	1	1	21.55
				6	0	2	2	20.73

LTE Band 7, 20 MHz Bandwidth Output Power
Full Power (Tethering Off)

BW	Ch	Freq. (MHz)	Mode	UL RB Allocation	UL RB Start	Target MPR	Meas. MPR	Avg Pwr (dBm)
20	20850	2510	QPSK	1	0	0	0	22.83
				1	49	0	0	23.05
				1	99	0	0	22.94
				50	0	1	1	22.18
				50	24	1	1	22.20
				50	49	1	1	22.10
				100	0	1	1	22.14
			16QAM	1	0	1	1	22.32
				1	49	1	1	22.28
				1	99	1	1	22.28
				50	0	2	2	21.24
				50	24	2	2	21.23
				50	49	2	2	21.18
				100	0	2	2	21.19
	21100	2535	QPSK	1	0	0	0	22.73
				1	49	0	0	22.70
				1	99	0	0	22.91
				50	0	1	1	21.89
				50	24	1	1	21.93
				50	49	1	1	21.96
				100	0	1	1	22.01
			16QAM	1	0	1	1	22.03
				1	49	1	1	22.06
				1	99	1	1	22.18
				50	0	2	2	20.98
				50	24	2	2	20.98
				50	49	2	2	21.00
				100	0	2	2	20.97
	21350	2560	QPSK	1	0	0	0	22.73
				1	49	0	0	22.94
				1	99	0	0	23.02
				50	0	1	1	22.01
				50	24	1	1	22.12
				50	49	1	1	22.22
				100	0	1	1	22.12
			16QAM	1	0	1	1	22.02
				1	49	1	1	22.24
				1	99	1	1	22.38
				50	0	2	2	21.04
				50	24	2	2	21.12
				50	49	2	2	21.27
				100	0	2	2	21.12

Reduced Power (Tethering On)

BW	Ch	Freq. (MHz)	Mode	UL RB Allocation	UL RB Start	Target MPR	Meas. MPR	Avg Pwr (dBm)
20	20850	2510	QPSK	1	0	MPR is disabled when power reduction is enabled		18.11
				1	49			18.05
				1	99			17.96
				50	0			18.23
				50	24			18.17
				50	49			18.12
				100	0			18.16
			16QAM	1	0			18.35
				1	49			18.27
				1	99			18.22
				50	0			18.26
				50	24			18.19
				50	49			18.13
				100	0			18.15
	21100	2535	QPSK	1	0			17.76
				1	49			17.79
				1	99			17.94
				50	0			17.87
				50	24			17.95
				50	49			17.94
				100	0			17.94
			16QAM	1	0			17.98
				1	49			18.03
				1	99			18.23
				50	0			17.87
				50	24			17.97
				50	49			17.96
				100	0			17.94
	21350	2560	QPSK	1	0			17.81
				1	49			18.00
				1	99			18.10
				50	0			18.00
				50	24			18.11
				50	49			18.19
				100	0			18.07
			16QAM	1	0			18.01
				1	49			18.24
				1	99			18.41
				50	0			18.00
				50	24			18.10
				50	49			18.23
				100	0			18.09

LTE Band 7, 15 MHz Bandwidth Output Power
Full Power (Tethering Off)

BW	Ch	Freq. (MHz)	Mode	UL RB Allocation	UL RB Start	Target MPR	Meas. MPR	Avg Pwr (dBm)
15	20825	2507.5	QPSK	1	0	0	0	23.05
				1	37	0	0	23.20
				1	74	0	0	23.04
				36	0	1	1	22.20
				36	19	1	1	22.29
				36	39	1	1	22.25
				75	0	1	1	22.24
			16QAM	1	0	1	1	22.02
				1	37	1	1	22.11
				1	74	1	1	21.88
				36	0	2	2	21.21
				36	19	2	2	21.23
				36	39	2	2	21.17
				75	0	2	2	21.24
	21100	2535	QPSK	1	0	0	0	22.84
				1	37	0	0	22.89
				1	74	0	0	22.91
				36	0	1	1	21.98
				36	19	1	1	21.97
				36	39	1	1	21.99
				75	0	1	1	22.02
			16QAM	1	0	1	1	21.69
				1	37	1	1	21.77
				1	74	1	1	21.74
				36	0	2	2	20.99
				36	19	2	2	20.94
				36	39	2	2	20.96
				75	0	2	2	20.96
	21375	2562.5	QPSK	1	0	0	0	23.11
				1	37	0	0	23.05
				1	74	0	0	23.19
				36	0	1	1	22.16
				36	19	1	1	22.13
				36	39	1	1	22.29
				75	0	1	1	22.16
			16QAM	1	0	1	1	21.83
				1	37	1	1	21.87
				1	74	1	1	22.08
				36	0	2	2	21.05
				36	19	2	2	21.08
				36	39	2	2	21.25
				75	0	2	2	21.15

Reduced Power (Tethering On)

BW	Ch	Freq. (MHz)	Mode	UL RB Allocation	UL RB Start	Target MPR	Meas. MPR	Avg Pwr (dBm)
15	20825	2507.5	QPSK	1	0	MPR is disabled when power reduction is enabled		18.29
				1	37			18.19
				1	74			18.10
				36	0			18.24
				36	19			18.16
				36	39			18.14
				75	0			18.15
			16QAM	1	0			18.04
				1	37			17.98
				1	74			17.84
				36	0			18.15
				36	19			18.16
				36	39			18.08
				75	0			18.12
	21100	2535	QPSK	1	0			17.90
				1	37			17.91
				1	74			17.92
				36	0			17.96
				36	19			17.92
				36	39			17.94
				75	0			17.93
			16QAM	1	0			17.65
				1	37			17.73
				1	74			17.74
				36	0			17.91
				36	19			17.88
				36	39			17.92
				75	0			17.88
	21375	2562.5	QPSK	1	0			18.13
				1	37			18.15
				1	74			18.22
				36	0			18.10
				36	19			18.13
				36	39			18.25
				75	0			18.14
			16QAM	1	0			17.89
				1	37			17.95
				1	74			18.08
				36	0			18.07
				36	19			18.10
				36	39			18.20
				75	0			18.08

LTE Band 7, 10 MHz Bandwidth Output Power
Full Power (Tethering Off)

BW	Ch	Freq. (MHz)	Mode	UL RB Allocation	UL RB Start	Target MPR	Meas. MPR	Avg Pwr (dBm)
10	20800	2505	QPSK	1	0	0	0	23.03
				1	24	0	0	23.07
				1	49	0	0	23.51
				25	0	1	1	22.19
				25	12	1	1	22.23
				25	24	1	1	22.28
				50	0	1	1	22.24
			16QAM	1	0	1	1	22.04
				1	24	1	1	22.03
				1	49	1	1	22.02
				25	0	2	2	21.21
				25	12	2	2	21.30
				25	24	2	2	21.24
				50	0	2	2	21.27
	21100	2535	QPSK	1	0	0	0	22.85
				1	24	0	0	22.92
				1	49	0	0	22.98
				25	0	1	1	21.98
				25	12	1	1	21.95
				25	24	1	1	21.97
				50	0	1	1	21.94
			16QAM	1	0	1	1	21.69
				1	24	1	1	21.75
				1	49	1	1	21.80
				25	0	2	2	20.94
				25	12	2	2	20.98
				25	24	2	2	20.96
				50	0	2	2	20.97
	21400	2565	QPSK	1	0	0	0	23.06
				1	24	0	0	23.23
				1	49	0	0	23.24
				25	0	1	1	22.15
				25	12	1	1	22.23
				25	24	1	1	22.29
				50	0	1	1	22.26
			16QAM	1	0	1	1	21.91
				1	24	1	1	22.03
				1	49	1	1	22.07
				25	0	2	2	21.10
				25	12	2	2	21.17
				25	24	2	2	21.18
				50	0	2	2	21.22

Reduced Power (Tethering On)

BW	Ch	Freq. (MHz)	Mode	UL RB Allocation	UL RB Start	Target MPR	Meas. MPR	Avg Pwr (dBm)
10	20800	2505	QPSK	1	0	MPR is disabled when power reduction is enabled		18.32
				1	24			18.30
				1	49			18.27
				25	0			18.26
				25	12			18.25
				25	24			18.20
				50	0			18.25
			16QAM	1	0			18.08
				1	24			18.01
				1	49			18.01
				25	0			18.21
				25	12			18.23
				25	24			18.20
				50	0			18.24
	21100	2535	QPSK	1	0			17.87
				1	24			17.96
				1	49			18.02
				25	0			17.90
				25	12			17.92
				25	24			17.93
				50	0			17.95
			16QAM	1	0			17.66
				1	24			17.70
				1	49			17.75
				25	0			17.89
				25	12			17.91
				25	24			17.92
				50	0			17.91
	21400	2565	QPSK	1	0			18.14
				1	24			18.28
				1	49			18.29
				25	0			18.12
				25	12			18.18
				25	24			18.19
				50	0			18.20
			16QAM	1	0			17.90
				1	24			18.05
				1	49			18.07
				25	0			18.06
				25	12			18.18
				25	24			18.22
				50	0			18.18

LTE Band 7, 5 MHz Bandwidth Output Power
Full Power (Tethering Off)

BW	Ch	Freq. (MHz)	Mode	UL RB Allocation	UL RB Start	Target MPR	Meas. MPR	Avg Pwr (dBm)
5	20775	2502.5	QPSK	1	0	0	0	22.98
				1	12	0	0	22.97
				1	24	0	0	23.05
				12	0	1	1	22.15
				12	6	1	1	22.15
				12	11	1	1	22.17
				25	0	1	1	22.13
			16QAM	1	0	1	1	22.10
				1	12	1	1	22.07
				1	24	1	1	22.17
				12	0	2	2	21.19
				12	6	2	2	21.22
				12	11	2	2	21.22
				25	0	2	2	21.25
	21100	2535	QPSK	1	0	0	0	22.81
				1	12	0	0	22.86
				1	24	0	0	22.92
				12	0	1	1	22.01
				12	6	1	1	21.92
				12	11	1	1	21.98
				25	0	1	1	21.94
			16QAM	1	0	1	1	21.63
				1	12	1	1	21.69
				1	24	1	1	21.76
				12	0	2	2	20.99
				12	6	2	2	20.97
				12	11	2	2	21.01
				25	0	2	2	21.07
	21425	2567.5	QPSK	1	0	0	0	23.19
				1	12	0	0	23.14
				1	24	0	0	23.14
				12	0	1	1	22.23
				12	6	1	1	22.20
				12	11	1	1	22.18
				25	0	1	1	22.22
			16QAM	1	0	1	1	21.98
				1	12	1	1	21.98
				1	24	1	1	22.00
				12	0	2	2	21.23
				12	6	2	2	21.24
				12	11	2	2	21.24
				25	0	2	2	21.30

Reduced Power (Tethering On)

BW	Ch	Freq. (MHz)	Mode	UL RB Allocation	UL RB Start	Target MPR	Meas. MPR	Avg Pwr (dBm)
5	20775	2502.5	QPSK	1	0	MPR is disabled when power reduction is enabled		18.30
				1	12			18.26
				1	24			18.31
				12	0			18.26
				12	6			18.27
				12	11			18.25
				25	0			18.24
			16QAM	1	0			18.05
				1	12			18.01
				1	24			18.10
				12	0			18.29
				12	6			18.30
				12	11			18.29
				25	0			18.34
	21100	2535	QPSK	1	0			17.85
				1	12			17.89
				1	24			17.95
				12	0			17.97
				12	6			17.94
				12	11			17.92
				25	0			17.95
			16QAM	1	0			17.58
				1	12			17.66
				1	24			17.73
				12	0			17.96
				12	6			17.97
				12	11			17.95
				25	0			18.03
	21425	2567.5	QPSK	1	0			18.23
				1	12			18.19
				1	24			18.22
				12	0			18.19
				12	6			18.21
				12	11			18.17
				25	0			18.19
			16QAM	1	0			18.02
				1	12			18.02
				1	24			18.05
				12	0			18.19
				12	6			18.22
				12	11			18.25
				25	0			18.28

LTE Band 17, 10 MHz Bandwidth Output Power
Full Power

BW	Ch	Freq. (MHz)	Mode	UL RB Allocation	UL RB Start	Target MPR	Meas. MPR	Avg Pwr (dBm)
10	23780	709	QPSK	1	0	0	0	22.72
				1	24	0	0	22.69
				1	49	0	0	22.76
				25	0	1	1	21.63
				25	12	1	1	21.62
				25	24	1	1	21.64
				50	0	1	1	21.64
			16QAM	1	0	1	1	21.48
				1	24	1	1	21.48
				1	49	1	1	21.48
				25	0	2	2	20.64
				25	12	2	2	20.65
				25	24	2	2	20.62
				50	0	2	2	20.68
	23790	710	QPSK	1	0	0	0	22.73
				1	24	0	0	22.72
				1	49	0	0	22.71
				25	0	1	1	21.65
				25	12	1	1	21.64
				25	24	1	1	21.64
				50	0	1	1	21.63
			16QAM	1	0	1	1	21.46
				1	24	1	1	21.47
				1	49	1	1	21.46
				25	0	2	2	20.65
				25	12	2	2	20.60
				25	24	2	2	20.61
				50	0	2	2	20.68
	23800	711	QPSK	1	0	0	0	22.69
				1	24	0	0	22.66
				1	49	0	0	22.72
				25	0	1	1	21.62
				25	12	1	1	21.61
				25	24	1	1	21.61
				50	0	1	1	21.61
			16QAM	1	0	1	1	21.47
				1	24	1	1	21.39
				1	49	1	1	21.45
				25	0	2	2	20.65
				25	12	2	2	20.64
				25	24	2	2	20.62
				50	0	2	2	20.67

LTE Band 17, 5 MHz Bandwidth Output Power
Full Power

BW	Ch	Freq. (MHz)	Mode	UL RB Allocation	UL RB Start	Target MPR	Meas. MPR	Avg Pwr (dBm)
5	23755	706.5	QPSK	1	0	0	0	22.71
				1	12	0	0	22.64
				1	24	0	0	22.72
				12	0	1	1	21.71
				12	6	1	1	21.65
				12	11	1	1	21.70
				25	0	1	1	21.64
			16QAM	1	0	1	1	21.46
				1	12	1	1	21.43
				1	24	1	1	21.51
				12	0	2	2	20.71
				12	6	2	2	20.72
				12	11	2	2	20.73
				25	0	2	2	20.77
	23790	710	QPSK	1	0	0	0	22.64
				1	12	0	0	22.57
				1	24	0	0	22.65
				12	0	1	1	21.65
				12	6	1	1	21.65
				12	11	1	1	21.55
				25	0	1	1	21.66
			16QAM	1	0	1	1	21.40
				1	12	1	1	21.41
				1	24	1	1	21.48
				12	0	2	2	20.68
				12	6	2	2	20.66
				12	11	2	2	20.70
				25	0	2	2	20.75
	23825	713.5	QPSK	1	0	0	0	22.63
				1	12	0	0	22.55
				1	24	0	0	22.66
				12	0	1	1	21.58
				12	6	1	1	21.59
				12	11	1	1	21.61
				25	0	1	1	21.57
			16QAM	1	0	1	1	21.36
				1	12	1	1	21.36
				1	24	1	1	21.48
				12	0	2	2	20.67
				12	6	2	2	20.65
				12	11	2	2	20.66
				25	0	2	2	20.72

5.3 Confirmation after SAR testing

It was checked that the power drift [W] is within +/-5%.The verification of power drift during the SAR test is that DASY5 system calculates the power drift by measuring the e-filed at the same location at beginning and the end of the scan measurement for each test position.

DASY5 system calculation Power drift value[dB] =20log(Ea)/(Eb)
Before SAR testing : Eb[V/m]
After SAR testing : Ea[V/m]

Limit of power drift[W] =+/-5%
X[dB]=10log[P]=10log(1.05/1)=10log(1.05)-10log(1)=0.212dB

from E-filed relations with power.
p=E^2/η=E^2/
Therefore, The correlation of power and the E-filed
XdB=10log(P)=10log(E)^2=20log(E)

Therefore,
The calculated power drift of DASY5 System must be the less than +/-0.212dB.

SECTION 6 SAR test exclusion considerations

6.1 Standalone SAR test exclusion considerations

Test was performed on all the surfaces which distance to antenna is less than 50mm.

The following is based on KDB447498D01.
1) At 100 MHz to 6 GHz and for *test separation distances* > 50 mm, the SAR test exclusion threshold is determined according to the following.
a) [Threshold at 50 mm in step 1) + (test separation distance - 50 mm)·(f(MHz)/150)] mW, at 100 MHz to 1500 MHz
b) [Threshold at 50 mm in step 1) + (test separation distance - 50 mm)·10] mW at > 1500 MHz and ≤ 6 GHz

WWAN GSM850

Standalone SAR tested	Positiom	Upper frequency of band *1	Maximum tune-up tolerance limit	Min distance *2	Calculation of threshold
☐	Top	848.8 [MHz] (251ch)	25.98 [dBm] 396.28 [mW]	127 [mm]	598.5 [mW]

WWAN PCS1900

Standalone SAR tested	Positiom	Upper frequency of band *1	Maximum tune-up tolerance limit	Min distance *2	Calculation of threshold
☐	Top	1909.8 [MHz] (810ch)	22.78 [dBm] 189.67 [mW]	127 [mm]	878.5 [mW]

WWAN WCDMA II

Standalone SAR tested	Positiom	Upper frequency of band *1	Maximum tune-up tolerance limit	Min distance *2	Calculation of threshold
☐	Top	1907.6 [MHz] (9538ch)	24 [dBm] 251.19 [mW]	127 [mm]	878.6 [mW]

WWAN WCDMA IV

Standalone SAR tested	Positiom	Upper frequency of band *1	Maximum tune-up tolerance limit	Min distance *2	Calculation of threshold
☐	Top	1752.6 [MHz] (1513ch)	24 [dBm] 251.19 [mW]	127 [mm]	883.3 [mW]

WWAN WCDMA V

Standalone SAR tested	Positiom	Upper frequency of band *1	Maximum tune-up tolerance limit	Min distance *2	Calculation of threshold
☐	Top	846.6 [MHz] (4233ch)	24 [dBm] 251.19 [mW]	127 [mm]	597.6 [mW]

WWAN LTE II

Standalone SAR tested	Positiom	Upper frequency of band *1	Maximum tune-up tolerance limit	Min distance *2	Calculation of threshold
☐	Top	1900 [MHz] (19100ch)	24 [dBm] 251.19 [mW]	127 [mm]	878.8 [mW]

WWAN LTE IV

Standalone SAR tested	Positiom	Upper frequency of band *1	Maximum tune-up tolerance limit	Min distance *2	Calculation of threshold
☐	Top	1754.3 [MHz] (20393ch)	24 [dBm] 251.19 [mW]	127 [mm]	883.3 [mW]

WWAN LTE V

Standalone SAR tested	Positiom	Upper frequency of band *1	Maximum tune-up tolerance limit	Min distance *2	Calculation of threshold
☐	Top	844 [MHz] (20600ch)	24 [dBm] 251.19 [mW]	127 [mm]	596.5 [mW]

WWAN LTE VII

Standalone SAR tested	Positiom	Upper frequency of band *1	Maximum tune-up tolerance limit	Min distance *2	Calculation of threshold
☐	Top	2562.5 [MHz] (21375ch)	24 [dBm] 251.19 [mW]	127 [mm]	863.7 [mW]

WWAN LTE XVII

Standalone SAR tested	Positiom	Upper frequency of band *1	Maximum tune-up tolerance limit	Min distance *2	Calculation of threshold
☐	Top	711 [MHz] (23800ch)	24 [dBm] 251.19 [mW]	127 [mm]	542.9 [mW]

*1 The upper frequency of the frequency band was used in order to calculate standalone SAR test exclusion considerations.
*2 Based on KDB447498D01, When the minimum test separation distance is < 5 mm, a distance of 5 mm is applied to determine SAR test exclusion. Refer to Appendix 4.

SECTION 7: Description of the SAR measurement setup

7.1 Test position for Head setup

i)Procedure for SAR testing

The EUT was tested in accordance with IEEE 1528: 2003 for both the "Cheek/Touch" and "Ear/Tilt" positions at the left and right sides of the SAM phantom head region. The FCC KDB 648474 D01 was also incorporated.

ii)Test mode

GSM850/PCS1900	**Data transmission mode (GPRS)/ Voice mode (GSM)**
WCDMA II/IV/V	**12.2kRMC**
LTE II/IV/V/VII/XVII	**QPSK**

iii)Test position

No.	Phantom	Position	WWAN	
			Tested	Antenna
1	Left	Cheek	☑	Fixed
2	Left	Cheek	☑	Fixed
3	Right	Tilt	☑	Fixed
4	Right	Tilt	☑	Fixed

Initial ear position

A handset should be initially positioned with the earpiece region pressed against the ear spacer of a head phantom.

The device should be positioned parallel to the "N-F" line defined along the base of the ear spacer that contains the "ear reference point". The "test device reference point" is aligned to the "ear reference point" on the head phantom and the "vertical centerline" is aligned to the "phantom reference plane".

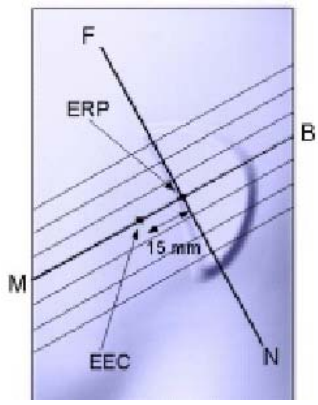

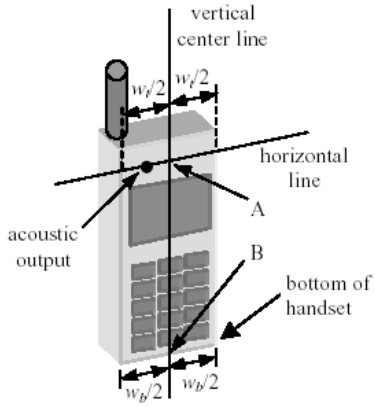

Cheek position

The device is brought toward the mouth of the head phantom by pivoting against the "ear reference point" or along the "N-F" line.

This test position is established:

i) When any point on the display, keypad or mouthpiece portions of the handset is in contact with the phantom.

ii) (or) When any portion of a foldout, sliding or similar keypad cover opened to its intended self-adjusting normal use position is in contact with the cheek or mouth of the phantom.

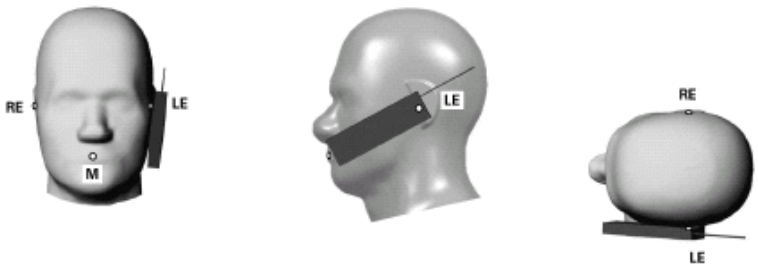

Tilt position

If the earpiece of the handset is not in full contact with the phantom's ear spacer and the peak SAR location for the "Cheek/Touch" position is located at the ear spacer region or corresponds to the earpiece region of the handset, the device should be returned to the "initial ear position" by rotating it away from the mouth until the earpiece is in full contact with the ear spacer. Otherwise the handset should be moved away from the cheek perpendicular to the line passes through both "ear reference points" for approximate 2-3 cm. While it is in this position, the handset is tilted away from the mouth with respect to the "test device reference point" by 15°. After the tilt, it is then moved back toward the head perpendicular to the line passes through both "ear reference points" until the device touches the phantom or the ear spacer. If the antenna touches the head first, the positioning process should be repeated with a tilt angle less than 15° so that the device and its antenna would touch the phantom simultaneously.

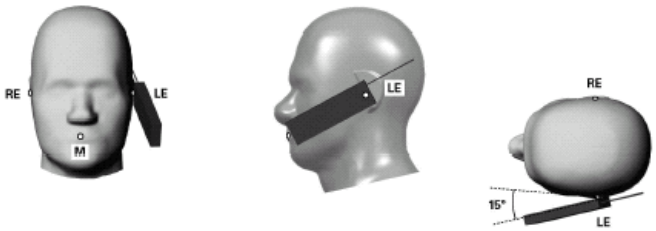

<Antenna position>

The antennas use for WWAN is integral part of the device.

7.2 Test position for Body-worn and Body(Hotspot) setup

i) Procedure for SAR testing

The tested procedure was performed according to The KDB 648474 D04. Test performed at 10 mm from the Flat phantom. According to KDB 941225 D06 Hotspot SAR procedure, test separation of Body-worn for WWAN is 10mm since the test separation distance (10mm) for hotspot mode is more conservative than Body-worn test(15mm).

ii) Test mode

GSM850/PCS1900	**Data transmission mode (GPRS)/ Voice mode (GSM)**
WCDMA II/IV/V	**12.2kRMC**
LTE II/IV/V/VII/XVII	**QPSK**

iii) Test position

No.	Position	WWAN			
		Tested	Antenna	Test separation distance (Separation of a flat phantom to EUT's surfaces and edges)	Only WCDMA Band2,4 and LTE Band2,4,7 with power reduction *1
1	Front	☑	Internal	10mm	☐ *2
2	Rear	☑	Internal	10mm	☐ *2
3	Top	☐	Internal	-	☐
4	Bottom	☑	Internal	10mm	☑
5	Right	☑	Internal	10mm	☑
6	Left	☑	Internal	10mm	☑

About test position, Refer to Appendix 4.

*1 When WLAN tethering function(Hotspot mode) is activated, WWAN transmit power is reduced.
This function is adapted to WCDMA Band 2, 4 and LTE Band 2, 4, 7.

*2 For the Front and Rear setup of above band, SAR was measured with Full power by considering with Body-worn SAR measurement.

SECTION 8 : Test surrounding

8.1 Measurement uncertainty

This measurement uncertainty budget is suggested by IEEE Std 1528(2013)[2] and determined by Schmid & Partner Engineering AG (DASY5 Uncertainty Budget[1]). Per KDB 865664 D01 SAR Measurement 100 MHz to 6 GHz v01r01 Section 2.8.1., when the highest measured SAR(1g) within a frequency band is < 1.5W/kg, the extensive SAR measurement uncertainty analysis described in IEEE Std.1528 (2013) is not required in SAR reports submitted for equipment approval.
<0.3 – 3GHz range>

Error Description	Uncertainty value ± %		Probability distribution	divisor	(ci) 1g	Standard Uncertainty (1g)		vi or veff
Measurement System								
Probe calibration	±	6.00	Normal	1	1	±	6.00	∞
Axial isotropy of the probe	±	4.7	Rectangular	√3	0.7	±	1.9	∞
Spherical isotropy of the probe	±	9.6	Rectangular	√3	0.7	±	3.9	∞
Boundary effects	±	1.0	Rectangular	√3	1	±	0.6	∞
Probe linearity	±	4.7	Rectangular	√3	1	±	2.7	∞
Detection limit	±	1.0	Rectangular	√3	1	±	0.6	∞
Modulation response	±	2.4	Rectangular	√3	1	±	1.4	∞
Readout electronics	±	0.3	Normal	1	1	±	0.3	∞
Response time	±	0.8	Rectangular	√3	1	±	0.5	∞
Integration time	±	2.6	Rectangular	√3	1	±	1.5	∞
RF ambient Noise	±	3.0	Rectangular	√3	1	±	1.7	∞
RF ambient Reflections	±	3.0	Rectangular	√3	1	±	1.7	∞
Probe Positioner	±	0.4	Rectangular	√3	1	±	0.2	∞
Probe positioning	±	2.9	Rectangular	√3	1	±	1.7	∞
Max.SAR Eval.	±	2.0	Rectangular	√3	1	±	1.2	∞
Test Sample Related								
Device positioning	±	2.9	Normal	1	1	±	2.9	8
Device holder uncertainty	±	3.6	Normal	1	1	±	3.6	162
Power drift	±	5.0	Rectangular	√3	1	±	2.9	∞
Power Scaling	+	0.0	Rectangular	√3	1	±	0.0	∞
Phantom and Setup								
Phantom uncertainty	±	6.1	Rectangular	√3	1	±	3.5	∞
Algorithm for correcting SAR for deviations in permittivity and conductivity	±	1.9	Normal	1	1	±	1.9	∞
Liquid conductivity (target.)	±	5.0	Rectangular	√3	0.78	±	2.3	∞
Liquid conductivity (meas.)	+	4.7	Rectangular	1	0.78	+	3.7	∞
Liquid permittivity (target.)	±	5.0	Rectangular	√3	0.23	+	0.7	
Liquid permittivity (meas.)	-	4.7	Rectangular	1	0.23	-	1.1	∞
Liquid conductivity - temp.unc (below 2deg.C.)	±	5.2	Rectangular	√3	0.78	±	2.3	∞
Liquid permittivity - temp.unc (below 2deg.C.)	±	0.8	Rectangular	√3	0.23	±	0.1	∞
Combined Standard Uncertainty						±	**12.122**	
Expanded Uncertainty (k=2)						±	**24.2**	

*. Table of uncertainties are listed for ISO/IEC 17025.

SECTION 9 : Measurement results

9.1 GSM850 Head SAR

(1) Method of measurement

Step.1 The searching for the worst position
The test was performed in the middle channel.
Step2. The changing mode
The test was performed with the worst position of Step.1.

Note:
1) The GPRS 2up mode was maximum time-based average power. The other slots SAR is not required for other mode because the maximum average output power for other mode is less than 1/4dB higher than that measured GPRS 2up mode.

2) According to KDB 447498 D01 General RF Exposure Guidance v05, testing of other required channels within the operating mode of a frequency band is not required when the reported 1-g or 10-g SAR for the mid-band or highest output power channel is
≤ 0.8 W/kg or 2.0 W/kg, for 1-g or 10-g respectively, when the transmission band is ≤ 100 MHz
≤ 0.6 W/kg or 1.5 W/kg, for 1-g or 10-g respectively, when the transmission band is between 100 MHz and 200 MHz
≤ 0.4 W/kg or 1.0 W/kg, for 1-g or 10-g respectively, when the transmission band is ≥ 200 MHz

3) Repeated measurement is not required when the original highest measured SAR is < 0.80 W/kg.
When the original highest measured SAR is ≥ 0.80 W/kg, repeat that measurement once.
Perform a second repeated measurement only if the ratio of largest to smallest SAR for the original and first repeated measurements is > 1.20 or when the original or repeated measurement is ≥ 1.45 W/kg (~ 10% from the 1-g SAR limit).

(2)Simulated Tissue Liquid Parameter confirmation

The dielectric parameters were checked prior to assessment using the R140 Reflectometer and DAKS-3.5 probe.
The dielectric parameters measurement is reported in each correspondent section.

DIELECTRIC PARAMETERS MEASUREMENT RESULTS											
Date	Ambient Temp. [deg.c]	Relative Humidity [%]	Liquid type	Liquid Temp. [deg.c]	Measured Frequency [MHz]	Parameters	Target Value	Measured	Deviation [%]	Limit [%]	Remark
-	-	-	-	-	835	εr	41.5	-	-	-	*1
						σ [mho/m]	0.90	-	-	-	
17-Jan	24.0	46	HSL900	23.5	836.6	εr	41.5	43.0	3.6	+/-5	*2
						σ [mho/m]	0.90	0.94	3.9	+/-5	
17-Jan	24.0	46	HSL900	23.5	900	εr	41.5	43.3	4.2	+/-5	*1
						σ [mho/m]	0.97	1.00	2.9	+/-5	

εr: Relative Permittivity / σ : Coductivity
*1 The Target value is a parameter defined in KDB 865664D01.
*2 The dielectric parameters should be linearly interpolated between the closest pair of target frequencies to determine the applicable dielectric parameters corresponding to the device test frequency.

(3)Result of Head SAR

HEAD SAR MEASUREMENT RESULTS													
Frequency		Modulation	Measured power		Maximum tune-up tolerance limit		Phantom Section	EUT Set-up Conditions			Measured SAR(1g) [W/kg]	Scaled factor	Reported SAR(1g) *1 [W/kg]
Channel	[MHz]		[dBm]	[mW]	[dBm]	[mW]		Antenna	Position	Separation [mm]			
Step.1 Worst position search													
190	836.6	GPRS 2slots	24.58	287.08	25.98	396.22	Flat	Inner	Left cheek	0	**0.305**	**1.380**	**0.421**
190	836.6	GPRS 2slots	24.58	287.08	25.98	396.22	Flat	Inner	Left tilt	0	**0.200**	**1.380**	**0.276**
190	836.6	GPRS 2slots	24.58	287.08	25.98	396.22	Flat	Inner	Right cheek	0	**0.302**	**1.380**	**0.417**
190	836.6	GPRS 2slots	24.58	287.08	25.98	396.22	Flat	Inner	Right tilt	0	**0.212**	**1.380**	**0.293**
190	836.6	GSM	23.33	215.28	24.97	313.99	Flat	Inner	Left cheek	0	**0.200**	**1.459**	**0.292**

*1 Reported SAR= Maximum tune-up tolerance limit [mW] / Measured power [mW] · Measured SAR [W/kg]

9.2 GSM850 Body-worn and Body(Hotspot) SAR

(1)Method of measurement

Step.1 The searching for the worst position
The test was performed in the middle channel.
Step2. The changing mode
The test was performed with the position which reported SAR>0.8W/kg of Step.1.
Step3. The changing to the other channels (Low, Mid)
The test was performed at the worst condition of Step1 and Step 2.

Note:
1) The GPRS 2up mode was maximum time-based average power. The other slots SAR is not required for other mode because the maximum average output power for other mode is less than 1/4dB higher than that measured GPRS 2up mode.

2) According to KDB 447498 D01 General RF Exposure Guidance v05, testing of other required channels within the operating mode of a frequency band is not required when the reported 1-g or 10-g SAR for the mid-band or highest output power channel is
≤ 0.8 W/kg or 2.0 W/kg, for 1-g or 10-g respectively, when the transmission band is ≤ 100 MHz
≤ 0.6 W/kg or 1.5 W/kg, for 1-g or 10-g respectively, when the transmission band is between 100 MHz and 200 MHz
≤ 0.4 W/kg or 1.0 W/kg, for 1-g or 10-g respectively, when the transmission band is ≥ 200 MHz

3) Repeated measurement is not required when the original highest measured SAR is < 0.80 W/kg.
When the original highest measured SAR is ≥ 0.80 W/kg, repeat that measurement once.
Perform a second repeated measurement only if the ratio of largest to smallest SAR for the original and first repeated measurements is > 1.20 or when the original or repeated measurement is ≥ 1.45 W/kg (~ 10% from the 1-g SAR limit).

(2)Simulated Tissue Liquid Parameter confirmation

The dielectric parameters were checked prior to assessment using the R140 Reflectometer and DAKS-3.5 probe.
The dielectric parameters measurement is reported in each correspondent section.

DIELECTRIC PARAMETERS MEASUREMENT RESULTS											
Date	Ambient Temp. [deg.c]	Relative Humidity [%]	Liquid type	Liquid Temp. [deg.c]	Measured Frequency [MHz]	Parameters	Target Value	Measured	Deviation [%]	Limit [%]	Remark
-	-	-	-	-	450	εr		-	-	-	*1
						σ [mho/m]		-	-	-	
6-Feb	24.0	45	MSL900	23.5	824.2	εr	55.2	54.0	-2.2	+/-5	*2
						σ [mho/m]	0.97	0.95	-1.9	+/-5	
-	-	-	-	-	835	εr	55.2	-	-	-	*1
						σ [mho/m]	0.97	-	-	-	
15-Jan	24.0	46	MSL900	23.5	836.6	εr	55.2	54.7	-0.9	+/-5	*2
						σ [mho/m]	0.97	0.96	-0.7	+/-5	
6-Feb	24.0	45	MSL900	23.5	836.6	εr	55.2	53.9	-2.4	+/-5	*2
						σ [mho/m]	0.97	0.97	-0.5	+/-5	
6-Feb	24.0	45	MSL900	23.5	848.6	εr	55.2	53.8	-2.5	+/-5	*2
						σ [mho/m]	0.99	0.98	-0.9	+/-5	
15-Jan	24.0	46	MSL900	23.5	900	εr	55.0	54.0	-1.8	+/-5	*1
						σ [mho/m]	1.05	1.03	-1.7	+/-5	
6-Feb	24.0	45	MSL900	23.5	900	εr	55.0	53.4	-2.9	+/-5	*1
						σ [mho/m]	1.05	1.05	0.0	+/-5	

εr: Relative Permittivity / σ : Coductivity
*1 The Target value is a parameter defined in KDB 865664D01.
*2 The dielectric parameters should be linearly interpolated between the closest pair of target frequencies to determine the applicable dielectric parameters corresponding to the device test frequency.

(3)Result of Body SAR

BODY SAR MEASUREMENT RESULTS													
Frequency		Modulation	Measured power		Maximum tune-up tolerance limit		Phantom Section	EUT Set-up Conditions			Measured SAR(1g) [W/kg]	Scaled factor	Reported SAR(1g) *1 [W/kg]
Channel	[MHz]		[dBm]	[mW]	[dBm]	[mW]		Antenna	Position	Separation [mm]			
Step.1 Worst position search													
189	836.6	GPRS 2slots	24.58	287.08	25.98	396.22	Flat	Inner	Front	10	**0.635**	**1.380**	**0.876**
189	836.6	GPRS 2slots	24.58	287.08	25.98	396.22	Flat	Inner	Rear	10	**0.440**	**1.380**	**0.607**
189	836.6	GPRS 2slots	24.58	287.08	25.98	396.22	Flat	Inner	Bottom	10	**0.139**	**1.380**	**0.192**
189	836.6	GPRS 2slots	24.58	287.08	25.98	396.22	Flat	Inner	Left	10	**0.215**	**1.380**	**0.297**
189	836.6	GPRS 2slots	24.58	287.08	25.98	396.22	Flat	Inner	Right	10	**0.549**	**1.380**	**0.758**
Step.2 Mode change													
189	836.6	GSM	23.33	215.28	24.97	313.99	Flat	Inner	Front(with earphone)	10	**0.485**	**1.459**	**0.707**
Step.3 Channel change													
128	824.2	GPRS 2slots	24.60	288.40	25.98	396.22	Flat	Inner	Front	10	**0.640**	**1.374**	**0.879**
251	848.8	GPRS 2slots	24.51	282.49	25.98	396.22	Flat	Inner	Front	10	**0.465**	**1.403**	**0.652**

*1 Reported SAR= Maximum tune-up tolerance limit [mW] / Measured power [mW] · Measured SAR [W/kg]

9.3 PCS1900 Head SAR

(1)Method of measurement

Step.1 The searching for the worst position
The test was performed in the middle channel.
Step2. The changing mode
The test was performed with the worst position of Step.1.

Note:
1) The GPRS 2up mode was maximum time-based average power. The other slots SAR is not required for other mode because the maximum average output power for other mode is less than 1/4dB higher than that measured GPRS 2up mode.

2) According to KDB 447498 D01 General RF Exposure Guidance v05, testing of other required channels within the operating mode of a frequency band is not required when the reported 1-g or 10-g SAR for the mid-band or highest output power channel is
≤ 0.8 W/kg or 2.0 W/kg, for 1-g or 10-g respectively, when the transmission band is ≤ 100 MHz
≤ 0.6 W/kg or 1.5 W/kg, for 1-g or 10-g respectively, when the transmission band is between 100 MHz and 200 MHz
≤ 0.4 W/kg or 1.0 W/kg, for 1-g or 10-g respectively, when the transmission band is ≥ 200 MHz

3) Repeated measurement is not required when the original highest measured SAR is < 0.80 W/kg.
When the original highest measured SAR is ≥ 0.80 W/kg, repeat that measurement once.
Perform a second repeated measurement only if the ratio of largest to smallest SAR for the original and first repeated measurements is > 1.20 or when the original or repeated measurement is ≥ 1.45 W/kg (~ 10% from the 1-g SAR limit).

(2)Simulated Tissue Liquid Parameter confirmation

The dielectric parameters were checked prior to assessment using the R140 Reflectometer and DAKS-3.5 probe.
The dielectric parameters measurement is reported in each correspondent section.

DIELECTRIC PARAMETERS MEASUREMENT RESULTS											
Date	Ambient Temp. [deg.c]	Relative Humidity [%]	Liquid type	Liquid Temp. [deg.c]	Measured Frequency [MHz]	Parameters	Target Value	Measured	Deviation [%]	Limit [%]	Remark
-	-	-	-	-	1800	εr	40.0	-	-	-	*1
						σ [mho/m]	1.40	-	-	-	
21-Jan	24.0	40	HSL1800	23.5	1880	εr	40.0	38.5	-3.7	+/-5	*2
						σ [mho/m]	1.40	1.46	4.4	+/-5	
-	-	-	-	-	1900	εr	40.0	-	-	-	*1
						σ [mho/m]	1.40	-	-	-	

εr: Relative Permittivity / σ : Coductivity
*1 The Target value is a parameter defined in KDB 865664D01.
*2 The dielectric parameters should be linearly interpolated between the closest pair of target frequencies to determine the applicable dielectric parameters corresponding to the device test frequency.

(3)Result of Head SAR

HEAD SAR MEASUREMENT RESULTS													
Frequency		Modulation	Measured power		Maximum tune-up tolerance limit		Phantom Section	EUT Set-up Conditions			Measured SAR(1g) [W/kg]	Scaled factor	Reported SAR(1g) *1 [W/kg]
Channel	[MHz]		[dBm]	[mW]	[dBm]	[mW]		Antenna	Position	Separation [mm]			
Step.1 Worst position search													
661	1880	GPRS 2slots	21.49	140.93	22.78	189.64	Flat	Inner	Left cheek	0	**0.339**	**1.346**	**0.456**
661	1880	GPRS 2slots	21.49	140.93	22.78	189.64	Flat	Inner	Left tilt	0	**0.058**	**1.346**	**0.078**
661	1880	GPRS 2slots	21.49	140.93	22.78	189.64	Flat	Inner	Right cheek	0	**0.150**	**1.346**	**0.202**
661	1880	GPRS 2slots	21.49	140.93	22.78	189.64	Flat	Inner	Right tilt	0	**0.043**	**1.346**	**0.058**
Step.2 Mode changge													
661	1880	GSM	19.89	97.50	21.97	157.37	Flat	Inner	Left cheek	0	**0.148**	**1.614**	**0.239**

*1 Reported SAR= Maximum tune-up tolerance limit [mW] / Measured power [mW] · Measured SAR [W/kg]

9.4 PCS1900 Body-worn and Body (Hotspot) SAR

(1)Method of measurement

Step.1 The searching for the worst position
The test was performed in the middle channel.
Step2. The changing mode
The test was performed with the worst position of Step1.
Step3. The changing to the other channels (Low, Mid)
The test was performed with the position which reported SAR>0.8W/kg of Step.1 and Step2.
Step4. With accessory
The test was performed at the worst condition of Step1, Step2 and Step3 since measured SAR>1.2W/kg.

Note:
1) The GPRS 2up mode was maximum time-based average power. The other slots SAR is not required for other mode because the maximum average output power for other mode is less than 1/4dB higher than that measured GPRS 2up mode.

2) According to KDB 447498 D01 General RF Exposure Guidance v05, testing of other required channels within the operating mode of a frequency band is not required when the reported 1-g or 10-g SAR for the mid-band or highest output power channel is
≤ 0.8 W/kg or 2.0 W/kg, for 1-g or 10-g respectively, when the transmission band is ≤ 100 MHz
≤ 0.6 W/kg or 1.5 W/kg, for 1-g or 10-g respectively, when the transmission band is between 100 MHz and 200 MHz
≤ 0.4 W/kg or 1.0 W/kg, for 1-g or 10-g respectively, when the transmission band is ≥ 200 MHz

3) Repeated measurement is not required when the original highest measured SAR is < 0.80 W/kg.
When the original highest measured SAR is ≥ 0.80 W/kg, repeat that measurement once.
Perform a second repeated measurement only if the ratio of largest to smallest SAR for the original and first repeated measurements is > 1.20 or when the original or repeated measurement is ≥ 1.45 W/kg (~ 10% from the 1-g SAR limit).

(2)Simulated Tissue Liquid Parameter confirmation

The dielectric parameters were checked prior to assessment using the R140 Reflectometer and DAKS-3.5 probe.
The dielectric parameters measurement is reported in each correspondent section.

DIELECTRIC PARAMETERS MEASUREMENT RESULTS

Date	Ambient Temp. [deg.c]	Relative Humidity [%]	Liquid type	Liquid Temp. [deg.c]	Measured Frequency [MHz]	Parameters	Target Value	Measured	Deviation [%]	Limit [%]	Remark
-	-	-	-	-	1800	εr	53.3	-	-	-	*1
						σ [mho/m]	1.52	-	-	-	
30-Jan	24.0	42	MLS1800	23.5	1850.2	εr	53.3	51.6	-3.1	+/-5	*2
						σ [mho/m]	1.52	1.54	1.5	+/-5	
30-Jan	24.0	42	MLS1800	23.5	1880	εr	53.3	51.6	-3.3	+/-5	*2
						σ [mho/m]	1.52	1.57	3.6	+/-5	
30-Jan	24.0	42	MLS1950	23.5	1909.8	εr	53.3	52.1	-2.3	+/-5	*2
						σ [mho/m]	1.52	1.48	-2.9	+/-5	
-	-	-	-	-	2000	εr	53.3	-	-	-	*1
						σ [mho/m]	1.52	-	-	-	

(3)Result of Body SAR

BODY SAR MEASUREMENT RESULTS													
Frequency		Modulation	Measured power		Maximum tune-up tolerance limit		Phantom Section	EUT Set-up Conditions			Measured SAR(1g) [W/kg]	Scaled factor	Reported SAR(1g) [W/kg]
Channel	[MHz]		[dBm]	[mW]	[dBm]	[mW]		Antenna	Position	Separatio [mm]			
Step.1 Worst position search													
661	1880	GPRS 2slot	21.49	140.93	22.78	189.64	Flat	Inner	Front	10	**0.633**	**1.346**	**0.852**
661	1880	GPRS 2slot	21.49	140.93	22.78	189.64	Flat	Inner	Rear	10	**0.592**	**1.346**	**0.797**
661	1880	GPRS 2slot	21.49	140.93	22.78	189.64	Flat	Inner	Bottom	10	**1.070**	**1.346**	**1.440**
661	1880	GPRS 2slot	21.49	140.93	22.78	189.64	Flat	Inner	Left	10	**0.130**	**1.346**	**0.175**
661	1880	GPRS 2slot	21.49	140.93	22.78	189.64	Flat	Inner	Right	10	**0.318**	**1.346**	**0.428**
Step.2 Mode changge													
661	1880	GSM	19.89	97.50	21.97	157.37	Flat	Inner	Front	10	**0.767**	**1.614**	**1.238**
Step.3 Channel changge													
512	1850.2	GPRS 2slot	21.47	140.28	22.78	189.64	Flat	Inner	Front	10	**0.585**	**1.352**	**0.791**
810	1909.8	GPRS 2slot	21.28	134.28	22.78	189.64	Flat	Inner	Front	10	**0.690**	**1.412**	**0.975**
512	1850.2	GPRS 2slot	21.47	140.28	22.78	189.64	Flat	Inner	Bottom	10	**0.883**	**1.352**	**1.194**
810	1909.8	GPRS 2slot	21.28	134.28	22.78	189.64	Flat	Inner	Bottom	10	**1.070**	**1.412**	**1.511**
512	1850.2	GSM	19.84	96.38	21.97	157.37	Flat	Inner	Front	10	**0.649**	**1.633**	**1.060**
810	1909.8	GSM	19.80	95.50	21.97	157.37	Flat	Inner	Front	10	**0.530**	**1.648**	**0.873**
Step.4 With accessory													
810	1909.8	GPRS 2slot	21.28	134.28	22.78	189.64	Flat	Inner	Bottom	10	**1.010**	**1.412**	**1.426**

*1 Reported SAR= Maximum tune-up tolerance limit [mW] / Measured power [mW] · Measured SAR [W/kg]

9.5 WCDMA Band II Head SAR

(1)Method of measurement

Step.1 The searching for the worst position
The test was performed in the middle channel.

Note:
1) The BODY SAR is not required for HSDPA mode because the maximum average output power for HSDPA mode is less than 1/4dB higher than that measured 12.2k RMC mode.

2) According to KDB 447498 D01 General RF Exposure Guidance v05, testing of other required channels within the operating mode of a frequency band is not required when the reported 1-g or 10-g SAR for the mid-band or highest output power channel is
≤ 0.8 W/kg or 2.0 W/kg, for 1-g or 10-g respectively, when the transmission band is ≤ 100 MHz
≤ 0.6 W/kg or 1.5 W/kg, for 1-g or 10-g respectively, when the transmission band is between 100 MHz and 200 MHz
≤ 0.4 W/kg or 1.0 W/kg, for 1-g or 10-g respectively, when the transmission band is ≥ 200 MHz

3) Repeated measurement is not required when the original highest measured SAR is < 0.80 W/kg.
When the original highest measured SAR is ≥ 0.80 W/kg, repeat that measurement once.
Perform a second repeated measurement only if the ratio of largest to smallest SAR for the original and first repeated measurements is > 1.20 or when the original or repeated measurement is ≥ 1.45 W/kg (~ 10% from the 1-g SAR limit).

(2)Simulated Tissue Liquid Parameter confirmation

The dielectric parameters were checked prior to assessment using the R140 Reflectometer and DAKS-3.5 probe.
The dielectric parameters measurement is reported in each correspondent section.

DIELECTRIC PARAMETERS MEASUREMENT RESULTS

Date	Ambient Temp. [deg.c]	Relative Humidity [%]	Liquid type	Liquid Temp. [deg.c]	Measured Frequency [MHz]	Parameters	Target Value	Measured	Deviation [%]	Limit [%]	Remark
-	-	-	-	-	1800	εr	40.0	-	-	-	*1
						σ [mho/m]	1.40	-	-	-	
23-Jan	24.0	46	HSL1800	23.5	1880	εr	40.0	39.4	-1.6	+/-5	*2
						σ [mho/m]	1.40	1.42	1.4	+/-5	
-	-	-	-	-	1900	εr	40.0	-	-	-	*1
						σ [mho/m]	1.40	-	-	-	

εr: Relative Permittivity / σ : Coductivity
*1 The Target value is a parameter defined in KDB 865664D01.
*2 The dielectric parameters should be linearly interpolated between the closest pair of target frequencies to determine the applicable dielectric parameters corresponding to the device test frequency.

(3)Result of Head SAR

HEAD SAR MEASUREMENT RESULTS

Frequency		Modulation	Measured power		Maximum tune-up tolerance limit		Phantom Section	EUT Set-up Conditions			Measured SAR(1g) [W/kg]	Scaled factor	Reported SAR(1g) *1 [W/kg]
Channel	[MHz]		[dBm]	[mW]	[dBm]	[mW]		Antenna	Position	Separation [mm]			
Step.1 Worst position search													
9400	1880	RMC 12.2kbps	23.68	233.35	24.00	251.19	Flat	Inner	Left cheek	0	**0.270**	**1.076**	**0.291**
9400	1880	RMC 12.2kbps	23.68	233.35	24.00	251.19	Flat	Inner	Left tilt	0	**0.074**	**1.076**	**0.080**
9400	1880	RMC 12.2kbps	23.68	233.35	24.00	251.19	Flat	Inner	Right cheek	0	**0.163**	**1.076**	**0.175**
9400	1880	RMC 12.2kbps	23.68	233.35	24.00	251.19	Flat	Inner	Right tilt	0	**0.087**	**1.076**	**0.094**

*1 Reported SAR= Maximum tune-up tolerance limit [mW] / Measured power [mW] · Measured SAR [W/kg]

9.6 WCDMA Band II Body-worn and Body(Hotspot) SAR

(1)Method of measurement

Step.1 The searching for the worst position
The test was performed in the middle channel.
Step2. The changing to the other channels (Low, Mid)
The test was performed with the position which reported SAR>0.8W/kg of Step.1.
Step3. With accessory
The test was performed at the worst condition of Step1 and Step2 since measured SAR>1.2W/kg.
Step4. The repeated measurement
The test was performed at the worst condition of 1900MHz Band.

Note:
1) The GPRS 2up mode was maximum time-based average power. The other slots SAR is not required for other mode because the maximum average output power for other mode is less than 1/4dB higher than that measured GPRS 2up mode.

2) According to KDB 447498 D01 General RF Exposure Guidance v05, testing of other required channels within the operating mode of a frequency band is not required when the reported 1-g or 10-g SAR for the mid-band or highest output power channel is
≤ 0.8 W/kg or 2.0 W/kg, for 1-g or 10-g respectively, when the transmission band is ≤ 100 MHz
≤ 0.6 W/kg or 1.5 W/kg, for 1-g or 10-g respectively, when the transmission band is between 100 MHz and 200 MHz
≤ 0.4 W/kg or 1.0 W/kg, for 1-g or 10-g respectively, when the transmission band is ≥ 200 MHz

3) Repeated measurement is not required when the original highest measured SAR is < 0.80 W/kg.
When the original highest measured SAR is ≥ 0.80 W/kg, repeat that measurement once.
Perform a second repeated measurement only if the ratio of largest to smallest SAR for the original and first repeated measurements is > 1.20 or when the original or repeated measurement is ≥ 1.45 W/kg (~ 10% from the 1-g SAR limit).

(2)Simulated Tissue Liquid Parameter confirmation

The dielectric parameters were checked prior to assessment using the R140 Reflectometer and DAKS-3.5 probe.
The dielectric parameters measurement is reported in each correspondent section.

DIELECTRIC PARAMETERS MEASUREMENT RESULTS											
Date	Ambient Temp. [deg.c]	Relative Humidity [%]	Liquid type	Liquid Temp. [deg.c]	Measured Frequency [MHz]	Parameters	Target Value	Measured	Deviation [%]	Limit [%]	Remark
-	-	-	-	-	1800	εr	53.3	-	-	-	*1
						σ [mho/m]	1.52	-	-	-	
28-Jan	24.0	42	MSL1800	23.5	1852.4	εr	53.3	50.8	-4.6	+/-5	*2
						σ [mho/m]	1.52	1.58	3.9	+/-5	
30-Jan	24.0	40	MSL1800	23.5	1852.4	εr	53.3	51.6	-3.2	+/-5	*2
						σ [mho/m]	1.52	1.54	1.3	+/-5	
28-Jan	24.0	40	MSL1800	23.5	1880	εr	53.3	50.8	-4.6	+/-5	*2
						σ [mho/m]	1.52	1.58	3.9	+/-5	
30-Jan	24.0	40	MSL1800	23.5	1880	εr	53.3	51.6	-3.3	+/-5	*2
						σ [mho/m]	1.52	1.57	3.6	+/-5	
30-Jan	24.0	40	MSL1950	23.5	1907.6	εr	53.3	52.1	-2.3	+/-5	*2
						σ [mho/m]	1.52	1.48	-3.0	+/-5	
30-Jan	24.0	40	MSL1950	23.5	2000	εr	53.3	51.7	-3.0	+/-5	*1
						σ [mho/m]	1.52	1.57	3.6	+/-5	

εr: Relative Permittivity / σ : Coductivity
*1 The Target value is a parameter defined in KDB 865664D01.
*2 The dielectric parameters should be linearly interpolated between the closest pair of target frequencies to determine the applicable dielectric parameters corresponding to the device test frequency.

(3)Result of Body SAR

BODY SAR MEASUREMENT RESULTS													
Frequency		Modulation	Measured power		Maximum tune-up tolerance limit		Phantom Section	EUT Set-up Conditions			Measured SAR(1g) [W/kg]	Scaled factor	Reported SAR(1g) *1 [W/kg]
Channel	[MHz]		[dBm]	[mW]	[dBm]	[mW]		Antenna	Position	Separation [mm]			
Step.1 Worst position search													
9400	1880	RMC 12.2k	23.68	233.35	24.00	251.19	Flat	Inner	Front	10	**1.100**	**1.076**	**1.184**
9400	1880	RMC 12.2k	23.68	233.35	24.00	251.19	Flat	Inner	Rear	10	**1.080**	**1.076**	**1.163**
9400	1880	RMC 12.2k	20.66	116.41	21.50	141.25	Flat	Inner	Bottom	10	**0.893**	**1.213**	**1.084**
9400	1880	RMC 12.2k	20.66	116.41	21.50	141.25	Flat	Inner	Left	10	**0.529**	**1.213**	**0.642**
9400	1880	RMC 12.2k	20.66	116.41	21.50	141.25	Flat	Inner	Right	10	**0.080**	**1.213**	**0.097**
Step.2 Channel change													
9262	1852.4	RMC 12.2k	23.88	244.34	24.00	251.19	Flat	Inner	Front	10	**1.190**	**1.028**	**1.223**
9538	1907.6	RMC 12.2k	23.55	226.46	24.00	251.19	Flat	Inner	Front	10	**0.962**	**1.109**	**1.067**
9262	1852.4	RMC 12.2k	23.88	244.34	24.00	251.19	Flat	Inner	Rear	10	**0.966**	**1.028**	**0.993**
9538	1907.6	RMC 12.2k	23.55	226.46	24.00	251.19	Flat	Inner	Rear	10	**1.010**	**1.109**	**1.120**
9262	1852.4	RMC 12.2k	20.86	121.90	21.50	141.25	Flat	Inner	Bottom	10	**0.758**	**1.159**	**0.878**
9538	1907.6	RMC 12.2k	20.69	117.22	21.50	141.25	Flat	Inner	Bottom	10	**0.880**	**1.205**	**1.060**
Step.3 With accessory													
9262	1852.4	RMC 12.2k	23.88	244.34	24.00	251.19	Flat	Inner	Front	10	**1.140**	**1.028**	**1.172**
Step.4 Repeat measurement													
9262	1852.4	RMC 12.2k	23.88	244.34	24.00	251.19	Flat	Inner	Front	10	**1.030**	**1.028**	**1.059**

*1 Reported SAR= Maximum tune-up tolerance limit [mW] / Measured power [mW] · Measured SAR [W/kg]
*2 For Bottom, Left and Right positions, SAR is measured with power reduction mode

9.7 WCDMA Band IV Head SAR

(1)Method of measurement

Step.1 The searching for the worst position
The test was performed in the middle channel.

Note:
1) The BODY SAR is not required for HSDPA mode because the maximum average output power for HSDPA mode is less than 1/4dB higher than that measured 12.2k RMC mode.

2) According to KDB 447498 D01 General RF Exposure Guidance v05, testing of other required channels within the operating mode of a frequency band is not required when the reported 1-g or 10-g SAR for the mid-band or highest output power channel is
≤ 0.8 W/kg or 2.0 W/kg, for 1-g or 10-g respectively, when the transmission band is ≤ 100 MHz
≤ 0.6 W/kg or 1.5 W/kg, for 1-g or 10-g respectively, when the transmission band is between 100 MHz and 200 MHz
≤ 0.4 W/kg or 1.0 W/kg, for 1-g or 10-g respectively, when the transmission band is ≥ 200 MHz

3) Repeated measurement is not required when the original highest measured SAR is < 0.80 W/kg.
When the original highest measured SAR is ≥ 0.80 W/kg, repeat that measurement once.
Perform a second repeated measurement only if the ratio of largest to smallest SAR for the original and first repeated measurements is > 1.20 or when the original or repeated measurement is ≥ 1.45 W/kg (~ 10% from the 1-g SAR limit).

(2)Simulated Tissue Liquid Parameter confirmation

The dielectric parameters were checked prior to assessment using the R140 Reflectometer and DAKS-3.5 probe.
The dielectric parameters measurement is reported in each correspondent section.

DIELECTRIC PARAMETERS MEASUREMENT RESULTS

Date	Ambient Temp. [deg.c]	Relative Humidity [%]	Liquid type	Liquid Temp. [deg.c]	Measured Frequency [MHz]	Parameters	Target Value	Measured	Deviation [%]	Limit [%]	Remark
-	-	-	-	-	1450	εr	40.5	-	-	-	*1
						σ [mho/m]	1.20	-	-	-	
24-Jan	24.0	40	HSL1800	23.0	1732.6	εr	40.1	40.2	0.2	+/-5	*2
						σ [mho/m]	1.36	1.34	-1.3	+/-5	
-	-	-	-	-	1800	εr	40.0	-	-	-	*1
						σ [mho/m]	1.40	-	-	-	

εr: Relative Permittivity / σ : Coductivity
*1 The Target value is a parameter defined in KDB 865664D01.
*2 The dielectric parameters should be linearly interpolated between the closest pair of target frequencies to determine the applicable

(3)Result of Head SAR

HEAD SAR MEASUREMENT RESULTS

Frequency		Modulation	Measured power		Maximum tune-up tolerance limit		Phantom Section	EUT Set-up Conditions			Measured SAR(1g) [W/kg]	Scaled factor	Reported SAR(1g) *1 [W/kg]
Channel	[MHz]		[dBm]	[mW]	[dBm]	[mW]		Antenna	Position	Separation [mm]			
Step.1 Worst position search													
1413	1732.6	RMC 12.2kbps	23.37	217.27	24.00	251.19	Flat	Inner	Left cheek	0	**0.401**	**1.156**	**0.464**
1413	1732.6	RMC 12.2kbps	23.37	217.27	24.00	251.19	Flat	Inner	Left tilt	0	**0.084**	**1.156**	**0.098**
1413	1732.6	RMC 12.2kbps	23.37	217.27	24.00	251.19	Flat	Inner	Right cheek	0	**0.238**	**1.156**	**0.275**
1413	1732.6	RMC 12.2kbps	23.37	217.27	24.00	251.19	Flat	Inner	Right tilt	0	**0.113**	**1.156**	**0.131**

*1 Reported SAR= Maximum tune-up tolerance limit [mW] / Measured power [mW] · Measured SAR [W/kg]

9.8 WCDMA Band IV Body-Worn and Body(Hotspot) SAR

(1)Method of measurement

Step.1 The searching for the worst position
The test was performed in the middle channel.
Step2. The changing to the other channels (Low, Mid)
The test was performed with the position which reported SAR>0.8W/kg of Step.1.
Step3. The repeated measurement
The test was performed at the worst condition of 1750MHz Band.

Note:
1) The GPRS 2up mode was maximum time-based average power. The other slots SAR is not required for other mode because the maximum average output power for other mode is less than 1/4dB higher than that measured GPRS 2up mode.

2) According to KDB 447498 D01 General RF Exposure Guidance v05, testing of other required channels within the operating mode of a frequency band is not required when the reported 1-g or 10-g SAR for the mid-band or highest output power channel is
≤ 0.8 W/kg or 2.0 W/kg, for 1-g or 10-g respectively, when the transmission band is ≤ 100 MHz
≤ 0.6 W/kg or 1.5 W/kg, for 1-g or 10-g respectively, when the transmission band is between 100 MHz and 200 MHz
≤ 0.4 W/kg or 1.0 W/kg, for 1-g or 10-g respectively, when the transmission band is ≥ 200 MHz

3) Repeated measurement is not required when the original highest measured SAR is < 0.80 W/kg.
When the original highest measured SAR is ≥ 0.80 W/kg, repeat that measurement once.
Perform a second repeated measurement only if the ratio of largest to smallest SAR for the original and first repeated measurements is > 1.20 or when the original or repeated measurement is ≥ 1.45 W/kg (~ 10% from the 1-g SAR limit).

(2)Simulated Tissue Liquid Parameter confirmation

The dielectric parameters were checked prior to assessment using the R140 Reflectometer and DAKS-3.5 probe.
The dielectric parameters measurement is reported in each correspondent section.

DIELECTRIC PARAMETERS MEASUREMENT RESULTS											
Date	Ambient Temp. [deg.c]	Relative Humidity [%]	Liquid type	Liquid Temp. [deg.c]	Measured Frequency [MHz]	Parameters	Target Value	Measured	Deviation [%]	Limit [%]	Remark
-	-	-	-	-	1610	εr	53.8	-	-	-	*1
						σ [mho/m]	1.40	-	-	-	
29-Jan	24.0	40	MLS1800	23.5	1712.4	εr	53.5	51.6	-3.6	+/-5	*2
						σ [mho/m]	1.46	1.40	-3.8	+/-5	
29-Jan	24.0	46	MLS1800	23.5	1732.6	εr	53.5	51.6	-3.5	+/-5	*2
						σ [mho/m]	1.48	1.42	-4.4	+/-5	
3-Feb	24.0	46	MLS1800	23.5	1732.6	εr	53.5	51.4	-3.8	+/-5	*2
						σ [mho/m]	1.48	1.42	-4.2	+/-5	
29-Jan	24.0	46	MLS1800	23.5	1752.6	εr	53.4	51.5	-3.6	+/-5	*2
						σ [mho/m]	1.49	1.45	-2.9	+/-5	
-	-	-	-	-	1800	εr	53.3	-	-	-	*1
						σ [mho/m]	1.52	-	-	-	

(3)Result of Body SAR

BODY SAR MEASUREMENT RESULTS													
Frequency		Modulation	Measured power		Maximum tune-up tolerance limit		Phantom Section	EUT Set-up Conditions			Measured [W/kg]	Scaled factor	Reported SAR(1g) *1 [W/kg]
Channel	[MHz]		[dBm]	[mW]	[dBm]	[mW]		Antenna	Position	Separation [mm]			
Step.1 Worst position search													
1413	1732.6	RMC 12.2k	23.37	217.27	24.00	251.19	Flat	Inner	Front	10	**0.791**	**1.156**	**0.914**
1413	1732.6	RMC 12.2k	23.37	217.27	24.00	251.19	Flat	Inner	Rear	10	**0.969**	**1.156**	**1.120**
1413	1732.6	RMC 12.2k	20.66	116.41	21.50	141.25	Flat	Inner	Bottom	10	**0.798**	**1.213**	**0.968**
1413	1732.6	RMC 12.2k	20.66	116.41	21.50	141.25	Flat	Inner	Left	10	**0.112**	**1.213**	**0.136**
1413	1732.6	RMC 12.2k	20.66	116.41	21.50	141.25	Flat	Inner	Right	10	**0.144**	**1.213**	**0.175**
Step.2 Channel change													
1312	1712.4	RMC 12.2k	23.47	222.33	24.00	251.19	Flat	Inner	Front	10	**0.657**	**1.130**	**0.742**
1513	1752.6	RMC 12.2k	23.25	211.35	24.00	251.19	Flat	Inner	Front	10	**0.830**	**1.189**	**0.986**
1312	1712.4	RMC 12.2k	23.47	222.33	24.00	251.19	Flat	Inner	Rear	10	**0.944**	**1.130**	**1.067**
1513	1752.6	RMC 12.2k	23.25	211.35	24.00	251.19	Flat	Inner	Rear	10	**0.937**	**1.189**	**1.114**
1312	1712.4	RMC 12.2k	20.82	120.78	21.50	141.25	Flat	Inner	Bottom	10	**0.832**	**1.169**	**0.973**
1513	1752.6	RMC 12.2k	20.73	118.30	21.50	141.25	Flat	Inner	Bottom	10	**0.807**	**1.194**	**0.964**
Step.3 Repeat measurement													
1413	1732.6	RMC 12.2k	23.37	217.27	24.00	251.19	Flat	Inner	Rear	10	**0.962**	**1.156**	**1.112**

*1 Reported SAR= Maximum tune-up tolerance limit [mW] / Measured power [mW] · Measured SAR [W/kg]
*2 For Bottom, Left and Right positions, SAR is measured with power reduction mode

9.9 WCDMA Band V Head SAR

(1)Method of measurement

Step.1 The searching for the worst position
The test was performed in the middle channel.

Note:
1) The BODY SAR is not required for HSDPA mode because the maximum average output power for HSDPA mode is less than 1/4dB higher than that measured 12.2k RMC mode.

2) According to KDB 447498 D01 General RF Exposure Guidance v05, testing of other required channels within the operating mode of a frequency band is not required when the reported 1-g or 10-g SAR for the mid-band or highest output power channel is
≤ 0.8 W/kg or 2.0 W/kg, for 1-g or 10-g respectively, when the transmission band is ≤ 100 MHz
≤ 0.6 W/kg or 1.5 W/kg, for 1-g or 10-g respectively, when the transmission band is between 100 MHz and 200 MHz
≤ 0.4 W/kg or 1.0 W/kg, for 1-g or 10-g respectively, when the transmission band is ≥ 200 MHz

3) Repeated measurement is not required when the original highest measured SAR is < 0.80 W/kg.
When the original highest measured SAR is ≥ 0.80 W/kg, repeat that measurement once.
Perform a second repeated measurement only if the ratio of largest to smallest SAR for the original and first repeated measurements is > 1.20 or when the original or repeated measurement is ≥ 1.45 W/kg (~ 10% from the 1-g SAR limit).

(2)Simulated Tissue Liquid Parameter confirmation

The dielectric parameters were checked prior to assessment using the R140 Reflectometer and DAKS-3.5 probe.
The dielectric parameters measurement is reported in each correspondent section.

DIELECTRIC PARAMETERS MEASUREMENT RESULTS

Date	Ambient Temp. [deg.c]	Relative Humidity [%]	Liquid type	Liquid Temp. [deg.c]	Measured Frequency [MHz]	Parameters	Target Value	Measured	Deviation [%]	Limit [%]	Remark
-	-	-	-	-	835	εr	41.5	-	-	-	*1
						σ [mho/m]	0.90	-	-	-	
17-Jan	24.0	46	HSL900	23.5	836.6	εr	41.5	43.0	3.6	+/-5	*2
						σ [mho/m]	0.90	0.94	3.9	+/-5	
17-Jan	24.0	46	HSL900	23.5	900	εr	41.5	42.3	1.8	+/-5	*1
						σ [mho/m]	0.97	1.00	2.9	+/-5	

εr: Relative Permittivity / σ : Coductivity
*1 The Target value is a parameter defined in KDB 865664D01.
*2 The dielectric parameters should be linearly interpolated between the closest pair of target frequencies to determine the applicable dielectric parameters corresponding to the device test frequency.

(3)Result of Head SAR

HEAD SAR MEASUREMENT RESULTS

Frequency		Modulation	Measured power		Maximum tune-up tolerance limit		Phantom Section	EUT Set-up Conditions			Measured SAR(1g) [W/kg]	Scaled factor	Reported SAR(1g) *1 [W/kg]
Channel	[MHz]		[dBm]	[mW]	[dBm]	[mW]		Antenna	Position	Separation [mm]			
Step.1 Worst position search													
4183	836.6	RMC 12.2kbps	23.65	231.74	24.00	251.19	Flat	Inner	Left cheek	0	**0.280**	**1.084**	**0.303**
4183	836.6	RMC 12.2kbps	23.65	231.74	24.00	251.19	Flat	Inner	Left tilt	0	**0.182**	**1.084**	**0.197**
4183	836.6	RMC 12.2kbps	23.65	231.74	24.00	251.19	Flat	Inner	Right cheek	0	**0.327**	**1.084**	**0.354**
4183	836.6	RMC 12.2kbps	23.65	231.74	24.00	251.19	Flat	Inner	Right tilt	0	**0.229**	**1.084**	**0.248**

*1 Reported SAR= Maximum tune-up tolerance limit [mW] / Measured power [mW] · Measured SAR [W/kg]

9.10 WCDMA Band V Body-worn and Body(Hotspot) SAR

(1) Method of measurement

Step.1 The searching for the worst position
The test was performed in the middle channel.
Step2. The changing to the other channels (Low, Mid)
The test was performed with the position which reported SAR>0.8W/kg of Step.1.
Step3. The repeated measurement
The test was performed at the worst condition of 850MHz Band.

Note:
1) The BODY SAR is not required for HSDPA mode because the maximum average output power for HSDPA mode is less than 1/4dB higher than that measured 12.2k RMC mode.

2) According to KDB 447498 D01 General RF Exposure Guidance v05, testing of other required channels within the operating mode of a frequency band is not required when the reported 1-g or 10-g SAR for the mid-band or highest output power channel is
≤ 0.8 W/kg or 2.0 W/kg, for 1-g or 10-g respectively, when the transmission band is ≤ 100 MHz
≤ 0.6 W/kg or 1.5 W/kg, for 1-g or 10-g respectively, when the transmission band is between 100 MHz and 200 MHz
≤ 0.4 W/kg or 1.0 W/kg, for 1-g or 10-g respectively, when the transmission band is ≥ 200 MHz

3) Repeated measurement is not required when the original highest measured SAR is < 0.80 W/kg.
When the original highest measured SAR is ≥ 0.80 W/kg, repeat that measurement once.
Perform a second repeated measurement only if the ratio of largest to smallest SAR for the original and first repeated measurements is > 1.20 or when the original or repeated measurement is ≥ 1.45 W/kg (~ 10% from the 1-g SAR limit).

(2)Simulated Tissue Liquid Parameter confirmation

The dielectric parameters were checked prior to assessment using the R140 Reflectometer and DAKS-3.5 probe.
The dielectric parameters measurement is reported in each correspondent section.

DIELECTRIC PARAMETERS MEASUREMENT RESULTS

Date	Ambient Temp. [deg.c]	Relative Humidity [%]	Liquid type	Liquid Temp. [deg.c]	Measured Frequency [MHz]	Parameters	Target Value	Measured	Deviation [%]	Limit [%]	Remark
-	-	-	-	-	450	εr		-	-	-	*1
						σ [mho/m]		-	-	-	
15-Jan	24.5	46	MSL900	23.5	826.4	εr	55.2	54.8	-0.8	+/-5	*2
						σ [mho/m]	0.97	0.95	-1.8	+/-5	
-	-	-	-	-	835	εr	55.2	-	-	-	*1
						σ [mho/m]	0.97	-	-	-	
15-Jan	24.5	46	MSL900	23.5	836.6	εr	55.2	54.7	-0.9	+/-5	*2
						σ [mho/m]	0.97	0.96	-0.7	+/-5	
15-Jan	24.5	46	MSL900	23.5	846.6	εr	55.2	54.6	-1.1	+/-5	*2
						σ [mho/m]	0.99	0.97	-1.7	+/-5	
15-Jan	24.5	46	MSL900	23.5	900	εr	55.0	54.0	-1.8	+/-5	*1
						σ [mho/m]	1.05	1.03	-1.7	+/-5	

εr: Relative Permittivity / σ : Coductivity
*1 The Target value is a parameter defined in KDB 865664D01.
*2 The dielectric parameters should be linearly interpolated between the closest pair of target frequencies to determine the applicable dielectric parameters corresponding to the device test frequency.

(3)Result of Body-worn and Body(Hotspot) SAR

BODY SAR MEASUREMENT RESULTS													
Frequency		Modulation	Measured power		Maximum tune-up tolerance limit		Phantom Section	EUT Set-up Conditions			Measured SAR(1g) [W/kg]	Scaled factor	Reported SAR(1g) *1 [W/kg]
Channel	[MHz]		[dBm]	[mW]	[dBm]	[mW]		Antenna	Position	Separation [mm]			
Step.1 Worst position search													
4183	836.6	RMC 12.2kbps	23.65	231.74	24.00	251.19	Flat	Inner	Front	10	**0.652**	**1.084**	**0.707**
4183	836.6	RMC 12.2kbps	23.65	231.74	24.00	251.19	Flat	Inner	Rear	10	**0.494**	**1.084**	**0.535**
4183	836.6	RMC 12.2kbps	23.65	231.74	24.00	251.19	Flat	Inner	Bottom	0	**0.151**	**1.084**	**0.164**
4183	836.6	RMC 12.2kbps	23.65	231.74	24.00	251.19	Flat	Inner	Left	0	**0.769**	**1.084**	**0.834**
4183	836.6	RMC 12.2kbps	23.65	231.74	24.00	251.19	Flat	Inner	Right	0	**0.215**	**1.084**	**0.233**
Step.2 Channel changge													
4132	826.4	RMC 12.2kbps	23.78	238.78	24.00	251.19	Flat	Inner	Left	0	**0.877**	**1.052**	**0.923**
4233	846.6	RMC 12.2kbps	23.66	232.27	24.00	251.19	Flat	Inner	Left	0	**0.823**	**1.081**	**0.890**
Step.3 Repeat													
4132	826.4	RMC 12.2kbps	23.78	238.78	24.00	251.19	Flat	Inner	Left	0	**0.859**	**1.052**	**0.904**

*1 Reported SAR= Maximum tune-up tolerance limit [mW] / Measured power [mW] · Measured SAR [W/kg]

9.11 LTE Band II Head SAR

Step.1 The searching for the worst position

QPSK modulation at the largest channel bandwidth, testing for 1 RB allocation configurations is initially performed for the channel/RB offset combination with the highest output power among 1 RB allocation configurations.

Step.2 Mode change

QPSK modulation at the largest channel bandwidth, testing for 50% RB allocation configurations is initially performed for the channel/RB offset combination with the highest output power among 1 RB allocation configurations.

Note:

1) Per KDB 941225 D05 SAR for LTE Devices v02, SAR test reduction is applied using the following criteria:
   - Beginning with QPSK modulation at the largest channel bandwidth, testing for 1 RB allocation configurations is initially performed for the channel/RB offset combination with the highest output power among 1 RB allocation configurations.
     - When the reported SAR for the initial measurement is < 0.8 W/kg, no further assessment is required for 1 RB allocation configurations.
     - When the reported SAR for the initial measurement is > 0.8 W/kg, the remaining channels are evaluated using the RB offset with the highest output power within the respective channels.
     - For all reported SAR that is > 1.45 W/kg, SAR, SAR is required for the remaining RB offset configurations of the same channel.
   - The same procedures apply to QPSK 50% RB allocation configurations at the largest channel bandwidth.
   - Testing for 100% RB allocation configurations at the largest channel bandwidth is performed for the channel, across low, mid and high, with the highest output power, when the highest reported SAR for either 1 RB or 50% RB is ≥ 0.8 W/kg, or when the maximum output power among 100% RB allocation configurations is greater than the maximum output power among either 1 RB or 25% RB allocation configurations.
     - Testing for the remaining channels in 100% RB allocation configurations is required only when reported SAR for the initial 100% RB allocation configuration is > 1.45 W/kg.
   - Testing for higher order modulations (16-QAM or 64-QAM) is required only when the highest reported SAR for QPSK is > 1.45 W/Kg or if its output power is more than 0.5 dB higher than that of QPSK.
   - Testing for the other channel bandwidths is required only when the highest reported SAR for the highest channel bandwidth is > 1.45 W/Kg or if its output power is more than 0.5 dB higher than that of the highest channel bandwidth.

2) According to KDB 447498 D01 General RF Exposure Guidance v05, testing of other required channels within the operating mode of a frequency band is not required when the reported 1-g or 10-g SAR for the mid-band or highest output power channel is

≤ 0.8 W/kg or 2.0 W/kg, for 1-g or 10-g respectively, when the transmission band is ≤ 100 MHz
≤ 0.6 W/kg or 1.5 W/kg, for 1-g or 10-g respectively, when the transmission band is between 100 MHz and 200 MHz
≤ 0.4 W/kg or 1.0 W/kg, for 1-g or 10-g respectively, when the transmission band is ≥ 200 MHz

3) Repeated measurement is not required when the original highest measured SAR is < 0.80 W/kg.
When the original highest measured SAR is ≥ 0.80 W/kg, repeat that measurement once.
Perform a second repeated measurement only if the ratio of largest to smallest SAR for the original and first repeated measurements is > 1.20 or when the original or repeated measurement is ≥ 1.45 W/kg (~ 10% from the 1-g SAR limit).

(2)Simulated Tissue Liquid Parameter confirmation

The dielectric parameters were checked prior to assessment using the R140 Reflectometer and DAKS-3.5 probe.
The dielectric parameters measurement is reported in each correspondent section.

DIELECTRIC PARAMETERS MEASUREMENT RESULTS											
Date	Ambient Temp. [deg.c]	Relative Humidity [%]	Liquid type	Liquid Temp. [deg.c]	Measured Frequency [MHz]	Parameters	Target Value	Measured	Deviation [%]	Limit [%]	Remark
-	-	-	-	-	1800	εr	40.0	-	-	-	*1
						σ [mho/m]	1.40	-	-	-	
26-Jan	24.0	40	HSL1800	23.5	1860	εr	40.0	39.7	-0.7	+/-5	*2
						σ [mho/m]	1.40	1.45	3.7	+/-5	
-	-	-	-	-	2000	εr	40.0	-	-	-	*1
						σ [mho/m]	1.40	-	-	-	

εr: Relative Permittivity / σ : Coductivity
*1 The Target value is a parameter defined in KDB 865664D01.
*2 The dielectric parameters should be linearly interpolated between the closest pair of target frequencies to determine the applicable dielectric parameters corresponding to the device test frequency.

(3)Result of Head SAR

HEAD SAR MEASUREMENT RESULTS															
Frequency		Modulation	UL RB Allocation	UL RB Start	Measured power		Maximum tune-up tolerance limit		Phantom Section	EUT Set-up Conditions			Measured SAR(1g) [W/kg]	Scaled factor	Reported SAR(1g) *1 [W/kg]
Channel	[MHz]				[dBm]	[mW]	[dBm]	[mW]		Antenna	Position	Separation [mm]			
Step.1 Worst position search															
18700	1860	QPSK	1	0	22.96	197.70	24.00	251.19	Flat	Inner	Left cheek	0	**0.199**	**1.271**	**0.253**
18700	1860	QPSK	1	0	22.96	197.70	24.00	251.19	Flat	Inner	Left tilt	0	**0.048**	**1.271**	**0.061**
18700	1860	QPSK	1	0	22.96	197.70	24.00	251.19	Flat	Inner	Right cheek	0	**0.138**	**1.271**	**0.175**
18700	1860	QPSK	1	0	22.96	197.70	24.00	251.19	Flat	Inner	Right tilt	0	**0.067**	**1.271**	**0.084**
Step.2 Mode changge															
18700	1860	QPSK	50	24	22.06	160.69	24.00	251.19	Flat	Inner	Left cheek	0	**0.165**	**1.563**	**0.258**

*1 Reported SAR= Maximum tune-up tolerance limit [mW] / Measured power [mW] · Measured SAR [W/kg]

9.12 LTE Band II Body-worn and Body(Hotspot) SAR

(1)Method of measurement

Step.1 The searching for the worst position

QPSK modulation at the largest channel bandwidth, testing for 1 RB allocation configurations is initially performed for the channel/RB offset combination with the highest output power among 1 RB allocation configurations.

Step.2 Mode change

QPSK modulation at the largest channel bandwidth, testing for 50% RB and 100%RB allocation configurations is initially performed for the channel/RB offset combination with the highest output power among for 50% RB and 100%RB allocation configurations.

Step.3 The changing to the other channels

The test was performed at the worst condition of Step1 and Step 2.

Step4. With accessory

The test was performed at the worst condition of Step1 to Step3 since measured SAR>1.2W/kg.

Note:

1) Per KDB 941225 D05 SAR for LTE Devices v02, SAR test reduction is applied using the following criteria:
   - Beginning with QPSK modulation at the largest channel bandwidth, testing for 1 RB allocation configurations is initially performed for the channel/RB offset combination with the highest output power among 1 RB allocation configurations.
     - When the reported SAR for the initial measurement is < 0.8 W/kg, no further assessment is required for 1 RB allocation configurations.
     - When the reported SAR for the initial measurement is > 0.8 W/kg, the remaining channels are evaluated using the RB offset with the highest output power within the respective channels.
     - For all reported SAR that is > 1.45 W/kg, SAR, SAR is required for the remaining RB offset configurations of the same channel.
   - The same procedures apply to QPSK 50% RB allocation configurations at the largest channel bandwidth.
   - Testing for 100% RB allocation configurations at the largest channel bandwidth is performed for the channel, across low, mid and high, with the highest output power, when the highest reported SAR for either 1 RB or 50% RB is ≥ 0.8 W/kg, or when the maximum output power among 100% RB allocation configurations is greater than the maximum output power among either 1 RB or 25% RB allocation configurations.
     - Testing for the remaining channels in 100% RB allocation configurations is required only when reported SAR for the initial 100% RB allocation configuration is > 1.45 W/kg.
   - Testing for higher order modulations (16-QAM or 64-QAM) is required only when the highest reported SAR for QPSK is > 1.45 W/Kg or if its output power is more than 0.5 dB higher than that of QPSK.
   - Testing for the other channel bandwidths is required only when the highest reported SAR for the highest channel bandwidth is > 1.45 W/Kg or if its output power is more than 0.5 dB higher than that of the highest channel bandwidth.

2) According to KDB 447498 D01 General RF Exposure Guidance v05, testing of other required channels within the operating mode of a frequency band is not required when the reported 1-g or 10-g SAR for the mid-band or highest output power channel is

≤ 0.8 W/kg or 2.0 W/kg, for 1-g or 10-g respectively, when the transmission band is ≤ 100 MHz
≤ 0.6 W/kg or 1.5 W/kg, for 1-g or 10-g respectively, when the transmission band is between 100 MHz and 200 MHz
≤ 0.4 W/kg or 1.0 W/kg, for 1-g or 10-g respectively, when the transmission band is ≥ 200 MHz

3) Repeated measurement is not required when the original highest measured SAR is < 0.80 W/kg.
When the original highest measured SAR is ≥ 0.80 W/kg, repeat that measurement once.
Perform a second repeated measurement only if the ratio of largest to smallest SAR for the original and first repeated measurements is > 1.20 or when the original or repeated measurement is ≥ 1.45 W/kg (~ 10% from the 1-g SAR limit).

(2)Simulated Tissue Liquid Parameter confirmation

The dielectric parameters were checked prior to assessment using the R140 Reflectometer and DAKS-3.5 probe.
The dielectric parameters measurement is reported in each correspondent section.

DIELECTRIC PARAMETERS MEASUREMENT RESULTS											
Date	Ambient Temp. [deg.c]	Relative Humidity [%]	Liquid type	Liquid Temp. [deg.c]	Measured Frequency [MHz]	Parameters	Target Value	Measured	Deviation [%]	Limit [%]	Remark
29-Jan	24.5	42	MSL1800	23.5	1800	εr	53.3	51.4	-3.6	+/-5	*1
						σ [mho/m]	1.52	1.48	-2.8	+/-5	
30-Jan	24.5	40	MSL1800	23.5	1800	εr	53.3	52.0	-2.4	+/-5	*1
						σ [mho/m]	1.52	1.50	-1.6	+/-5	
29-Jan	24.5	42	MSL1800	23.5	1860	εr	53.3	51.1	-4.0	+/-5	*2
						σ [mho/m]	1.52	1.55	2.0	+/-5	
3-Feb	24.5	33	MSL1800	23.5	1860	εr	53.3	50.8	-4.7	+/-5	*2
						σ [mho/m]	1.52	1.56	2.6	+/-5	
29-Jan	24.5	42	MSL1800	23.5	1880	εr	53.3	51.1	-4.2	+/-5	*2
						σ [mho/m]	1.52	1.58	3.6	+/-5	
30-Jan	24.5	40	MSL1800	23.5	1880	εr	53.3	51.6	-3.3	+/-5	*2
						σ [mho/m]	1.52	1.57	3.6	+/-5	
29-Jan	24.5	42	MSL1800	23.5	1900	εr	53.3	51.0	-4.3	+/-5	*2
						σ [mho/m]	1.52	1.59	4.7	+/-5	
30-Jan	24.5	40	MSL1800	23.5	1900	εr	53.3	51.4	-3.5	+/-5	*2
						σ [mho/m]	1.52	1.58	4.0	+/-5	
-	-	-	-	-	2000	εr	53.3	-	-	-	*1
						σ [mho/m]	1.52	-	-	-	

εr: Relative Permittivity / σ : Coductivity
*1 The Target value is a parameter defined in KDB 865664D01.
*2 The dielectric parameters should be linearly interpolated between the closest pair of target frequencies to determine the applicable dielectric parameters corresponding to the device test frequency.

(3)Result of Body and Hotspot SAR

SAR MEASUREMENT RESULTS															
Frequency		Modulation	UL RB Allocation	UL RB Start	Measured power		Maximum tune-up tolerance limit		Phantom Section	EUT Set-up Conditions			Measured SAR(1g) [W/kg]	Scaled factor	Reported SAR(1g) *1 [W/kg]
Channel	[MHz]				[dBm]	[mW]	[dBm]	[mW]		Antenna	Position	Separation [mm]			
Step.1 Worst position search															
18700	1860	QPSK	1	0	22.96	197.70	24.00	251.19	Flat	Inner	Front	10	**0.826**	**1.271**	**1.049**
18700	1860	QPSK	1	0	22.96	197.70	24.00	251.19	Flat	Inner	Rear	10	**0.704**	**1.271**	**0.894**
18700	1860	QPSK	1	0	20.45	110.92	21.50	141.25	Flat	Inner	Bottom	10	**0.753**	**1.274**	**0.959**
18700	1860	QPSK	1	0	20.45	110.92	21.50	141.25	Flat	Inner	Left	10	**0.188**	**1.274**	**0.239**
18700	1860	QPSK	1	0	20.45	110.92	21.50	141.25	Flat	Inner	Right	10	**0.105**	**1.274**	**0.134**
Step.2 Mode changge															
18700	1860	QPSK	50	24	22.06	160.69	23.00	199.53	Flat	Inner	Front	10	**0.914**	**1.242**	**1.135**
18700	1860	QPSK	100	0	22.04	159.96	23.00	199.53	Flat	Inner	Front	10	**0.892**	**1.247**	**1.113**
Step.3 Channel change															
18900	1880	QPSK	1	49	22.73	187.50	24.00	251.19	Flat	Inner	Front	10	**0.884**	**1.340**	**1.184**
19100	1900	QPSK	1	99	22.77	189.23	24.00	251.19	Flat	Inner	Front	10	**0.981**	**1.327**	**1.302**
18900	1880	QPSK	1	49	22.73	187.50	24.00	251.19	Flat	Inner	Rear	10	**0.726**	**1.340**	**0.973**
19100	1900	QPSK	1	99	22.77	189.23	24.00	251.19	Flat	Inner	Rear	10	**0.870**	**1.327**	**1.155**
18900	1880	QPSK	1	49	20.15	103.51	21.50	141.25	Flat	Inner	Bottom	10	**0.679**	**1.365**	**0.927**
19100	1900	QPSK	1	99	20.25	105.93	21.50	141.25	Flat	Inner	Bottom	10	**0.816**	**1.334**	**1.088**
18900	1880	QPSK	50	0	21.94	156.31	23.00	199.53	Flat	Inner	Front	10	**0.757**	**1.276**	**0.966**
19100	1900	QPSK	50	24	21.80	151.36	23.00	199.53	Flat	Inner	Front	10	**0.856**	**1.318**	**1.128**
Step.4 With accessory															
19100	1900	QPSK	1	99	22.77	189.23	24.00	251.19	Flat	Inner	Front	10	**0.985**	**1.327**	**1.307**

*1 Reported SAR= Maximum tune-up tolerance limit [mW] / Measured power [mW] · Measured SAR [W/kg]
*2 For Bottom, Left and Right positions, SAR is measured with power reduction mode

9.13 LTE Band IV Head SAR

Step.1 The searching for the worst position

QPSK modulation at the largest channel bandwidth, testing for 1 RB allocation configurations is initially performed for the channel/RB offset combination with the highest output power among 1 RB allocation configurations.

Step.2 Mode change

QPSK modulation at the largest channel bandwidth, testing for 50% RB allocation configurations is initially performed for the channel/RB offset combination with the highest output power among 50% RB allocation configurations.

Note:

1) Per KDB 941225 D05 SAR for LTE Devices v02, SAR test reduction is applied using the following criteria:
   - Beginning with QPSK modulation at the largest channel bandwidth, testing for 1 RB allocation configurations is initially performed for the channel/RB offset combination with the highest output power among 1 RB allocation configurations.
     - When the reported SAR for the initial measurement is < 0.8 W/kg, no further assessment is required for 1 RB allocation configurations.
     - When the reported SAR for the initial measurement is > 0.8 W/kg, the remaining channels are evaluated using the RB offset with the highest output power within the respective channels.
     - For all reported SAR that is > 1.45 W/kg, SAR, SAR is required for the remaining RB offset configurations of the same channel.
   - The same procedures apply to QPSK 50% RB allocation configurations at the largest channel bandwidth.
   - Testing for 100% RB allocation configurations at the largest channel bandwidth is performed for the channel, across low, mid and high, with the highest output power, when the highest reported SAR for either 1 RB or 50% RB is ≥ 0.8 W/kg, or when the maximum output power among 100% RB allocation configurations is greater than the maximum output power among either 1 RB or 25% RB allocation configurations.
     - Testing for the remaining channels in 100% RB allocation configurations is required only when reported SAR for the initial 100% RB allocation configuration is > 1.45 W/kg.
   - Testing for higher order modulations (16-QAM or 64-QAM) is required only when the highest reported SAR for QPSK is > 1.45 W/Kg or if its output power is more than 0.5 dB higher than that of QPSK.
   - Testing for the other channel bandwidths is required only when the highest reported SAR for the highest channel bandwidth is > 1.45 W/Kg or if its output power is more than 0.5 dB higher than that of the highest channel bandwidth.

2) According to KDB 447498 D01 General RF Exposure Guidance v05, testing of other required channels within the operating mode of a frequency band is not required when the reported 1-g or 10-g SAR for the mid-band or highest output power channel is

≤ 0.8 W/kg or 2.0 W/kg, for 1-g or 10-g respectively, when the transmission band is ≤ 100 MHz
≤ 0.6 W/kg or 1.5 W/kg, for 1-g or 10-g respectively, when the transmission band is between 100 MHz and 200 MHz
≤ 0.4 W/kg or 1.0 W/kg, for 1-g or 10-g respectively, when the transmission band is ≥ 200 MHz

3) Repeated measurement is not required when the original highest measured SAR is < 0.80 W/kg.
When the original highest measured SAR is ≥ 0.80 W/kg, repeat that measurement once.
Perform a second repeated measurement only if the ratio of largest to smallest SAR for the original and first repeated measurements is > 1.20 or when the original or repeated measurement is ≥ 1.45 W/kg (~ 10% from the 1-g SAR limit).

(2)Simulated Tissue Liquid Parameter confirmation

The dielectric parameters were checked prior to assessment using the R140 Reflectometer and DAKS-3.5 probe.
The dielectric parameters measurement is reported in each correspondent section.

DIELECTRIC PARAMETERS MEASUREMENT RESULTS

Date	Ambient Temp. [deg.c]	Relative Humidity [%]	Liquid type	Liquid Temp. [deg.c]	Measured Frequency [MHz]	Parameters	Target Value	Measured	Deviation [%]	Limit [%]	Remark
-	-	-	-	-	1610	εr	40.3	-	-	-	*1
						σ [mho/m]	1.29	-	-	-	
2-Feb	24.5	33	HSL1800	23.5	1720	εr	40.1	39.6	-1.4	+/-5	*2
						σ [mho/m]	1.35	1.36	0.4	+/-5	
2-Feb	24.5	33	HSL1800	23.5	1800	εr	40.0	39.2	-1.9	+/-5	*1
						σ [mho/m]	1.40	1.43	2.4	+/-5	

εr: Relative Permittivity / σ : Coductivity
*1 The Target value is a parameter defined in KDB 865664D01.
*2 The dielectric parameters should be linearly interpolated between the closest pair of target frequencies to determine the applicable dielectric parameters corresponding to the device test frequency.

(3)Result of Head SAR

HEAD SAR MEASUREMENT RESULTS

Frequency		Modulation	UL RB Allocation	UL RB Start	Measured power		Maximum tune-up tolerance limit		Phantom Section	EUT Set-up Conditions			Measured SAR(1g) [W/kg]	Scaled factor	Reported SAR(1g) *1 [W/kg]
Channel	[MHz]				[dBm]	[mW]	[dBm]	[mW]		Antenna	Position	Separation [mm]			
Step.1 Worst position search															
20050	1720	QPSK	1	99	22.87	193.64	24.00	251.19	Flat	Inner	Left cheek	0	**0.333**	**1.297**	**0.432**
20050	1720	QPSK	1	99	22.87	193.64	24.00	251.19	Flat	Inner	Left tilt	0	**0.080**	**1.297**	**0.104**
20050	1720	QPSK	1	99	22.87	193.64	24.00	251.19	Flat	Inner	Right cheek	0	**0.170**	**1.297**	**0.221**
20050	1720	QPSK	1	99	22.87	193.64	24.00	251.19	Flat	Inner	Right tilt	0	**0.089**	**1.297**	**0.115**
Step.2 Mode changge															
20050	1720	QPSK	50	0	21.99	158.12	24.00	251.19	Flat	Inner	Left cheek	0	**0.281**	**1.589**	**0.446**

*1 Reported SAR= Maximum tune-up tolerance limit [mW] / Measured power [mW] · Measured SAR [W/kg]

9.14 LTE Band IV Body-worn and Body(Hotspot) SAR

(1)Method of measurement

Step.1 The searching for the worst position

QPSK modulation at the largest channel bandwidth, testing for 1 RB allocation configurations is initially performed for the channel/RB offset combination with the highest output power among 1 RB allocation configurations.

Step.2 Mode change

QPSK modulation at the largest channel bandwidth, testing for 50% RB and 100%RB allocation configurations is initially performed for the channel/RB offset combination with the highest output power among 50% RB and 100%RB allocation configurations.

Step.3 The changing to the other channels

The test was performed at the worst condition of Step1 and Step 2.

Note:

1) Per KDB 941225 D05 SAR for LTE Devices v02, SAR test reduction is applied using the following criteria:
   - Beginning with QPSK modulation at the largest channel bandwidth, testing for 1 RB allocation configurations is initially performed for the channel/RB offset combination with the highest output power among 1 RB allocation configurations.
     - When the reported SAR for the initial measurement is < 0.8 W/kg, no further assessment is required for 1 RB allocation configurations.
     - When the reported SAR for the initial measurement is > 0.8 W/kg, the remaining channels are evaluated using the RB offset with the highest output power within the respective channels.
     - For all reported SAR that is > 1.45 W/kg, SAR, SAR is required for the remaining RB offset configurations of the same channel.
   - The same procedures apply to QPSK 50% RB allocation configurations at the largest channel bandwidth.
   - Testing for 100% RB allocation configurations at the largest channel bandwidth is performed for the channel, across low, mid and high, with the highest output power, when the highest reported SAR for either 1 RB or 50% RB is ≥ 0.8 W/kg, or when the maximum output power among 100% RB allocation configurations is greater than the maximum output power among either 1 RB or 25% RB allocation configurations.
     - Testing for the remaining channels in 100% RB allocation configurations is required only when reported SAR for the initial 100% RB allocation configuration is > 1.45 W/kg.
   - Testing for higher order modulations (16-QAM or 64-QAM) is required only when the highest reported SAR for QPSK is > 1.45 W/Kg or if its output power is more than 0.5 dB higher than that of QPSK.
   - Testing for the other channel bandwidths is required only when the highest reported SAR for the highest channel bandwidth is > 1.45 W/Kg or if its output power is more than 0.5 dB higher than that of the highest channel bandwidth.

2) According to KDB 447498 D01 General RF Exposure Guidance v05, testing of other required channels within the operating mode of a frequency band is not required when the reported 1-g or 10-g SAR for the mid-band or highest output power channel is

≤ 0.8 W/kg or 2.0 W/kg, for 1-g or 10-g respectively, when the transmission band is ≤ 100 MHz
≤ 0.6 W/kg or 1.5 W/kg, for 1-g or 10-g respectively, when the transmission band is between 100 MHz and 200 MHz
≤ 0.4 W/kg or 1.0 W/kg, for 1-g or 10-g respectively, when the transmission band is ≥ 200 MHz

3) Repeated measurement is not required when the original highest measured SAR is < 0.80 W/kg.
When the original highest measured SAR is ≥ 0.80 W/kg, repeat that measurement once.
Perform a second repeated measurement only if the ratio of largest to smallest SAR for the original and first repeated measurements is > 1.20 or when the original or repeated measurement is ≥ 1.45 W/kg (~ 10% from the 1-g SAR limit).

(2)Simulated Tissue Liquid Parameter confirmation

The dielectric parameters were checked prior to assessment using the R140 Reflectometer and DAKS-3.5 probe.
The dielectric parameters measurement is reported in each correspondent section.

DIELECTRIC PARAMETERS MEASUREMENT RESULTS

Date	Ambient Temp. [deg.c]	Relative Humidity [%]	Liquid type	Liquid Temp. [deg.c]	Measured Frequency [MHz]	Parameters	Target Value	Measured	Deviation [%]	Limit [%]	Remark
-	-	-	-	-	1610	εr	53.8	-	-	-	*1
						σ [mho/m]	1.40	-	-	-	
3-Feb	24.0	33	MSL1800	23.5	1720	εr	53.5	51.5	-3.8	+/-5	*2
						σ [mho/m]	1.47	1.41	-4.3	+/-5	
3-Feb	24.0	33	MSL1800	23.5	1732.5	εr	53.5	51.4	-3.8	+/-5	*2
						σ [mho/m]	1.48	1.42	-4.1	+/-5	
3-Feb	24.0	33	MSL1800	23.5	1745	εr	53.4	51.4	-3.9	+/-5	*2
						σ [mho/m]	1.49	1.43	-3.9	+/-5	
-	-	-	-	-	1800	εr	53.3	-	-	-	*1
						σ [mho/m]	1.52	-	-	-	

εr: Relative Permittivity / σ : Coductivity
*1 The Target value is a parameter defined in KDB 865664D01.
*2 The dielectric parameters should be linearly interpolated between the closest pair of target frequencies to determine the applicable dielectric parameters corresponding to the device test frequency.

(3)Result of Body-worn and Body(Hotspot) SAR

SAR MEASUREMENT RESULTS

Frequency		Modulation	UL RB Allocation	UL RB Start	Measured power		Maximum tune-up tolerance limit		Phantom Section	EUT Set-up Conditions			Measured SAR(1g) [W/kg]	Scaled factor	Reported SAR(1g) *1 [W/kg]
Channel	[MHz]				[dBm]	[mW]	[dBm]	[mW]		Antenna	Position	Separation [mm]			
Step.1 Worst position search															
20050	1720	QPSK	1	99	22.87	193.64	24.00	251.19	Flat	Inner	Front	10	**0.629**	**1.297**	**0.816**
20050	1720	QPSK	1	99	22.87	193.64	24.00	251.19	Flat	Inner	Rear	10	**0.668**	**1.297**	**0.867**
20050	1720	QPSK	1	99	20.42	110.15	21.50	141.25	Flat	Inner	Bottom	10	**0.919**	**1.282**	**1.178**
20050	1720	QPSK	1	99	20.42	110.15	21.50	141.25	Flat	Inner	Left	10	**0.097**	**1.282**	**0.124**
20050	1720	QPSK	1	99	20.42	110.15	21.50	141.25	Flat	Inner	Right	10	**0.197**	**1.282**	**0.253**
Step2. Mode change															
20050	1720	QPSK	50	0	20.45	110.92	21.50	141.25	Flat	Inner	Bottom	10	**0.923**	**1.274**	**1.175**
20050	1720	QPSK	100	0	20.45	110.92	21.50	141.25	Flat	Inner	Bottom	10	**0.897**	**1.274**	**1.142**
Step.3 Channel changge															
20175	1732.5	QPSK	1	99	22.78	189.67	24.00	251.19	Flat	Inner	Front	10	**0.652**	**1.324**	**0.863**
20300	1745	QPSK	1	49	22.78	189.67	24.00	251.19	Flat	Inner	Front	10	**0.687**	**1.324**	**0.910**
20175	1732.5	QPSK	1	99	22.78	189.67	24.00	251.19	Flat	Inner	Rear	10	**0.691**	**1.324**	**0.915**
20300	1745	QPSK	1	49	22.78	189.67	24.00	251.19	Flat	Inner	Rear	10	**0.712**	**1.324**	**0.943**
20175	1732.5	QPSK	1	49	20.23	105.44	21.50	141.25	Flat	Inner	Bottom	10	**0.834**	**1.340**	**1.117**
20300	1745	QPSK	1	49	20.26	106.17	21.50	141.25	Flat	Inner	Bottom	10	**0.835**	**1.330**	**1.111**
20175	1732.5	QPSK	50	49	20.41	109.90	21.50	141.25	Flat	Inner	Bottom	10	**0.809**	**1.285**	**1.040**
20300	1745	QPSK	50	24	20.42	110.15	21.50	141.25	Flat	Inner	Bottom	10	**0.829**	**1.282**	**1.063**

*1 Reported SAR= Maximum tune-up tolerance limit [mW] / Measured power [mW] · Measured SAR [W/kg]
*2 For Bottom, Left and Right positions, SAR is measured with power reduction mode

9.15 LTE Band V Head SAR

(1)Method of measurement

Step.1 The searching for the worst position

QPSK modulation at the largest channel bandwidth, testing for 1 RB allocation configurations is initially performed for the channel/RB offset combination with the highest output power among 1 RB allocation configurations.

Step.2 Mode change

QPSK modulation at the largest channel bandwidth, testing for 50% RB allocation configurations is initially performed for the channel/RB offset combination with the highest output power among 1 RB allocation configurations.

Step.3 The changing to the other channels

The test was performed at the worst condition of Step1 and Step 2.

Note:

1) Per KDB 941225 D05 SAR for LTE Devices v02, SAR test reduction is applied using the following criteria:
   - Beginning with QPSK modulation at the largest channel bandwidth, testing for 1 RB allocation configurations is initially performed for the channel/RB offset combination with the highest output power among 1 RB allocation configurations.
     - When the reported SAR for the initial measurement is < 0.8 W/kg, no further assessment is required for 1 RB allocation configurations.
     - When the reported SAR for the initial measurement is > 0.8 W/kg, the remaining channels are evaluated using the RB offset with the highest output power within the respective channels.
     - For all reported SAR that is > 1.45 W/kg, SAR, SAR is required for the remaining RB offset configurations of the same channel.
   - The same procedures apply to QPSK 50% RB allocation configurations at the largest channel bandwidth.
   - Testing for 100% RB allocation configurations at the largest channel bandwidth is performed for the channel, across low, mid and high, with the highest output power, when the highest reported SAR for either 1 RB or 50% RB is ≥ 0.8 W/kg, or when the maximum output power among 100% RB allocation configurations is greater than the maximum output power among either 1 RB or 25% RB allocation configurations.
     - Testing for the remaining channels in 100% RB allocation configurations is required only when reported SAR for the initial 100% RB allocation configuration is > 1.45 W/kg.
   - Testing for higher order modulations (16-QAM or 64-QAM) is required only when the highest reported SAR for QPSK is > 1.45 W/Kg or if its output power is more than 0.5 dB higher than that of QPSK.
   - Testing for the other channel bandwidths is required only when the highest reported SAR for the highest channel bandwidth is > 1.45 W/Kg or if its output power is more than 0.5 dB higher than that of the highest channel bandwidth.

2) According to KDB 447498 D01 General RF Exposure Guidance v05, testing of other required channels within the operating mode of a frequency band is not required when the reported 1-g or 10-g SAR for the mid-band or highest output power channel is

≤ 0.8 W/kg or 2.0 W/kg, for 1-g or 10-g respectively, when the transmission band is ≤ 100 MHz
≤ 0.6 W/kg or 1.5 W/kg, for 1-g or 10-g respectively, when the transmission band is between 100 MHz and 200 MHz
≤ 0.4 W/kg or 1.0 W/kg, for 1-g or 10-g respectively, when the transmission band is ≥ 200 MHz

3) Repeated measurement is not required when the original highest measured SAR is < 0.80 W/kg.
When the original highest measured SAR is ≥ 0.80 W/kg, repeat that measurement once.
Perform a second repeated measurement only if the ratio of largest to smallest SAR for the original and first repeated measurements is > 1.20 or when the original or repeated measurement is ≥ 1.45 W/kg (~ 10% from the 1-g SAR limit).

(2)Simulated Tissue Liquid Parameter confirmation

The dielectric parameters were checked prior to assessment using the R140 Reflectometer and DAKS-3.5 probe.
The dielectric parameters measurement is reported in each correspondent section.

DIELECTRIC PARAMETERS MEASUREMENT RESULTS											
Date	Ambient Temp. [deg.c]	Relative Humidity [%]	Liquid type	Liquid Temp. [deg.c]	Measured Frequency [MHz]	Parameters	Target Value	Measured	Deviation [%]	Limit [%]	Remark
-	-	-	-	-	450	εr	43.5	-	-	-	*1
						σ [mho/m]	0.87	-	-	-	
17-Jan	24.5	46	HSL900	23.5	829	εr	41.5	43.1	3.8	+/-5	*2
						σ [mho/m]	0.90	0.93	2.9	+/-5	
17-Jan	24.5	46	HSL900	23.5	900	εr	41.5	42.3	1.8	+/-5	*1
						σ [mho/m]	0.97	1.00	2.9	+/-5	

εr: Relative Permittivity / σ : Coductivity
*1 The Target value is a parameter defined in KDB 865664D01.
*2 The dielectric parameters should be linearly interpolated between the closest pair of target frequencies to determine the applicable dielectric parameters corresponding to the device test frequency.

(3)Result of Head SAR

HEAD SAR MEASUREMENT RESULTS															
Frequency		Modulation	UL RB Allocation	UL RB Start	Measured power		Maximum tune-up tolerance limit		Phantom Section	EUT Set-up Conditions			Measured SAR(1g) [W/kg]	Scaled factor	Reported SAR(1g) *1 [W/kg]
Channel	[MHz]				[dBm]	[mW]	[dBm]	[mW]		Antenna	Position	Separation [mm]			
Step.1 Worst position search															
20400	829	QPSK	1	0	22.91	195.43	24.00	251.19	Flat	Inner	Left cheek	0	**0.243**	**1.285**	**0.312**
20400	829	QPSK	1	0	22.91	195.43	24.00	251.19	Flat	Inner	Left tilt	0	**0.180**	**1.285**	**0.231**
20400	829	QPSK	1	0	22.91	195.43	24.00	251.19	Flat	Inner	Right cheek	0	**0.276**	**1.285**	**0.355**
20400	829	QPSK	1	0	22.91	195.43	24.00	251.19	Flat	Inner	Right tilt	0	**0.199**	**1.285**	**0.256**
Step.2 Mode changge															
20400	829	QPSK	25	0	21.69	147.57	23.00	199.53	Flat	Inner	Right cheek	0	**0.197**	**1.352**	**0.266**

*1 Reported SAR= Maximum tune-up tolerance limit [mW] / Measured power [mW] · Measured SAR [W/kg]

9.16 LTE Band V Body-worn and Body(Hotspot) SAR

(1)Method of measurement

Step.1 The searching for the worst position

QPSK modulation at the largest channel bandwidth, testing for 1 RB allocation configurations is initially performed for the channel/RB offset combination with the highest output power among 1 RB allocation configurations.

Step.2 Mode change

QPSK modulation at the largest channel bandwidth, testing for 50% RB and 100%RB allocation configurations is initially performed for the channel/RB offset combination with the highest output power among 50% RB and 100%RB allocation configurations.

Step.3 The changing to the other channels

The test was performed at the worst condition of Step1 and Step 2.

Note:

1) Per KDB 941225 D05 SAR for LTE Devices v02, SAR test reduction is applied using the following criteria:
   - Beginning with QPSK modulation at the largest channel bandwidth, testing for 1 RB allocation configurations is initially performed for the channel/RB offset combination with the highest output power among 1 RB allocation configurations.
     - When the reported SAR for the initial measurement is < 0.8 W/kg, no further assessment is required for 1 RB allocation configurations.
     - When the reported SAR for the initial measurement is > 0.8 W/kg, the remaining channels are evaluated using the RB offset with the highest output power within the respective channels.
     - For all reported SAR that is > 1.45 W/kg, SAR, SAR is required for the remaining RB offset configurations of the same channel.
   - The same procedures apply to QPSK 50% RB allocation configurations at the largest channel bandwidth.
   - Testing for 100% RB allocation configurations at the largest channel bandwidth is performed for the channel, across low, mid and high, with the highest output power, when the highest reported SAR for either 1 RB or 50% RB is ≥ 0.8 W/kg, or when the maximum output power among 100% RB allocation configurations is greater than the maximum output power among either 1 RB or 25% RB allocation configurations.
     - Testing for the remaining channels in 100% RB allocation configurations is required only when reported SAR for the initial 100% RB allocation configuration is > 1.45 W/kg.
   - Testing for higher order modulations (16-QAM or 64-QAM) is required only when the highest reported SAR for QPSK is > 1.45 W/Kg or if its output power is more than 0.5 dB higher than that of QPSK.
   - Testing for the other channel bandwidths is required only when the highest reported SAR for the highest channel bandwidth is > 1.45 W/Kg or if its output power is more than 0.5 dB higher than that of the highest channel bandwidth.

2) According to KDB 447498 D01 General RF Exposure Guidance v05, testing of other required channels within the operating mode of a frequency band is not required when the reported 1-g or 10-g SAR for the mid-band or highest output power channel is

≤ 0.8 W/kg or 2.0 W/kg, for 1-g or 10-g respectively, when the transmission band is ≤ 100 MHz
≤ 0.6 W/kg or 1.5 W/kg, for 1-g or 10-g respectively, when the transmission band is between 100 MHz and 200 MHz
≤ 0.4 W/kg or 1.0 W/kg, for 1-g or 10-g respectively, when the transmission band is ≥ 200 MHz

3) Repeated measurement is not required when the original highest measured SAR is < 0.80 W/kg.
When the original highest measured SAR is ≥ 0.80 W/kg, repeat that measurement once.
Perform a second repeated measurement only if the ratio of largest to smallest SAR for the original and first repeated measurements is > 1.20 or when the original or repeated measurement is ≥ 1.45 W/kg (~ 10% from the 1-g SAR limit).

(2)Simulated Tissue Liquid Parameter confirmation

The dielectric parameters were checked prior to assessment using the R140 Reflectometer and DAKS-3.5 probe.
The dielectric parameters measurement is reported in each correspondent section.

DIELECTRIC PARAMETERS MEASUREMENT RESULTS											
Date	Ambient Temp. [deg.c]	Relative Humidity [%]	Liquid type	Liquid Temp. [deg.c]	Measured Frequency [MHz]	Parameters	Target Value	Measured	Deviation [%]	Limit [%]	Remark
-	-	-	-	-	450	εr		-	-	-	*1
						σ [mho/m]		-	-	-	
27-Jan	24.5	40	MSL900	23.5	829	εr	55.2	54.8	-0.7	+/-5	*2
						σ [mho/m]	0.97	0.96	-1.4	+/-5	
6-Feb	24.5	45	MSL900	23.5	829	εr	55.2	54.0	-2.1	+/-5	*2
						σ [mho/m]	0.97	0.96	-1.2	+/-5	
-	-	-	-	-	835	εr	55.2	-	-	-	*1
						σ [mho/m]	0.97	-	-	-	
6-Feb	24.5	45	MSL900	23.5	836.5	εr	55.2	53.9	-2.4	+/-5	*2
						σ [mho/m]	0.97	0.97	-0.4	+/-5	
6-Feb	24.5	45	MSL900	23.5	844	εr	55.2	53.8	-2.4	+/-5	*2
						σ [mho/m]	0.98	0.97	-0.6	+/-5	
27-Jan	24.5	40	MSL900	23.5	900	εr	55.0	54.1	-1.6	+/-5	*1
						σ [mho/m]	1.05	1.04	-1.4	+/-5	
6-Feb	24.5	40	MSL900	23.5	900	εr	55.0	53.4	-2.9	+/-5	*1
						σ [mho/m]	1.05	1.03	-1.8	+/-5	

εr: Relative Permittivity / σ : Coductivity
*1 The Target value is a parameter defined in KDB 865664D01.
*2 The dielectric parameters should be linearly interpolated between the closest pair of target frequencies to determine the applicable dielectric parameters corresponding to the device test frequency.

(2) Result of Body-worn and Body(Hotspot) SAR

SAR MEASUREMENT RESULTS															
Frequency		Modulation	UL RB Allocation	UL RB Start	Measured power		Maximum tune-up tolerance limit		Phantom Section	EUT Set-up Conditions			Measured SAR(1g) [W/kg]	Scaled factor	Reported SAR(1g) *1 [W/kg]
Channel	[MHz]				[dBm]	[mW]	[dBm]	[mW]		Antenna	Position	Separation [mm]			
Step.1 Worst position search															
20400	829	QPSK	1	0	22.91	195.43	24.00	251.19	Flat	Inner	Front	10	**0.452**	**1.285**	**0.581**
20400	829	QPSK	1	0	22.91	195.43	24.00	251.19	Flat	Inner	Rear	10	**0.450**	**1.285**	**0.578**
20400	829	QPSK	1	0	22.91	195.43	24.00	251.19	Flat	Inner	Bottom	10	**0.105**	**1.285**	**0.135**
20400	829	QPSK	1	0	22.91	195.43	24.00	251.19	Flat	Inner	Left	10	**0.135**	**1.285**	**0.174**
20400	829	QPSK	1	0	22.91	195.43	24.00	251.19	Flat	Inner	Right	10	**0.669**	**1.285**	**0.860**
Step.2 Mode change															
20400	829	QPSK	25	0	21.69	147.57	23.00	199.53	Flat	Inner	Right	0	**0.498**	**1.352**	**0.673**
20400	829	QPSK	50	0	21.68	147.23	23.00	199.53	Flat	Inner	Right	0	**0.494**	**1.355**	**0.669**
Step.3 Channel change															
20525	836.5	QPSK	1	24	22.83	191.87	24.00	251.19	Flat	Inner	Left	0	**0.562**	**1.309**	**0.736**
20600	844	QPSK	1	49	22.75	188.36	24.00	251.19	Flat	Inner	Left	0	**0.432**	**1.334**	**0.576**

*1 Reported SAR= Maximum tune-up tolerance limit [mW] / Measured power [mW] · Measured SAR [W/kg]

9.17 LTE Band VII Head SAR

Step.1 The searching for the worst position

QPSK modulation at the largest channel bandwidth, testing for 1 RB allocation configurations is initially performed for the channel/RB offset combination with the highest output power among 1 RB allocation configurations.

Step.2 Mode change

QPSK modulation at the largest channel bandwidth, testing for 50% RB allocation configurations is initially performed for the channel/RB offset combination with the highest output power among 1 RB allocation configurations.

Note:

1) Per KDB 941225 D05 SAR for LTE Devices v02, SAR test reduction is applied using the following criteria:
   - Beginning with QPSK modulation at the largest channel bandwidth, testing for 1 RB allocation configurations is initially performed for the channel/RB offset combination with the highest output power among 1 RB allocation configurations.
     - When the reported SAR for the initial measurement is < 0.8 W/kg, no further assessment is required for 1 RB allocation configurations.
     - When the reported SAR for the initial measurement is > 0.8 W/kg, the remaining channels are evaluated using the RB offset with the highest output power within the respective channels.
     - For all reported SAR that is > 1.45 W/kg, SAR, SAR is required for the remaining RB offset configurations of the same channel.
   - The same procedures apply to QPSK 50% RB allocation configurations at the largest channel bandwidth.
   - Testing for 100% RB allocation configurations at the largest channel bandwidth is performed for the channel, across low, mid and high, with the highest output power, when the highest reported SAR for either 1 RB or 50% RB is ≥ 0.8 W/kg, or when the maximum output power among 100% RB allocation configurations is greater than the maximum output power among either 1 RB or 25% RB allocation configurations.
     - Testing for the remaining channels in 100% RB allocation configurations is required only when reported SAR for the initial 100% RB allocation configuration is > 1.45 W/kg.
   - Testing for higher order modulations (16-QAM or 64-QAM) is required only when the highest reported SAR for QPSK is > 1.45 W/Kg or if its output power is more than 0.5 dB higher than that of QPSK.
   - Testing for the other channel bandwidths is required only when the highest reported SAR for the highest channel bandwidth is > 1.45 W/Kg or if its output power is more than 0.5 dB higher than that of the highest channel bandwidth.

2) According to KDB 447498 D01 General RF Exposure Guidance v05, testing of other required channels within the operating mode of a frequency band is not required when the reported 1-g or 10-g SAR for the mid-band or highest output power channel is

≤ 0.8 W/kg or 2.0 W/kg, for 1-g or 10-g respectively, when the transmission band is ≤ 100 MHz
≤ 0.6 W/kg or 1.5 W/kg, for 1-g or 10-g respectively, when the transmission band is between 100 MHz and 200 MHz
≤ 0.4 W/kg or 1.0 W/kg, for 1-g or 10-g respectively, when the transmission band is ≥ 200 MHz

3) Repeated measurement is not required when the original highest measured SAR is < 0.80 W/kg.
When the original highest measured SAR is ≥ 0.80 W/kg, repeat that measurement once.
Perform a second repeated measurement only if the ratio of largest to smallest SAR for the original and first repeated measurements is > 1.20 or when the original or repeated measurement is ≥ 1.45 W/kg (~ 10% from the 1-g SAR limit).

(2)Simulated Tissue Liquid Parameter confirmation

The dielectric parameters were checked prior to assessment using the R140 Reflectometer and DAKS-3.5 probe.
The dielectric parameters measurement is reported in each correspondent section.

DIELECTRIC PARAMETERS MEASUREMENT RESULTS											
Date	Ambient Temp. [deg.c]	Relative Humidity [%]	Liquid type	Liquid Temp. [deg.c]	Measured Frequency [MHz]	Parameters	Target Value	Measured	Deviation [%]	Limit [%]	Remark
1-Feb	24.5	33	HSL2450	23.5	2450	εr	39.2	39.1	-0.2	+/-5	*1
						σ [mho/m]	1.80	1.84	2.4	+/-5	
1-Feb	24.5	33	HSL2450	23.5	2510	εr	39.1	39.0	-0.3	+/-5	*2
						σ [mho/m]	1.87	1.93	3.4	+/-5	
-	-	-	-	-	3000	εr	38.5	-	-	-	*1
						σ [mho/m]	2.40	-	-	-	

εr: Relative Permittivity / σ : Coductivity
*1 The Target value is a parameter defined in KDB 865664D01.
*2 The dielectric parameters should be linearly interpolated between the closest pair of target frequencies to determine the applicable dielectric parameters corresponding to the device test frequency.

(3)Result of Head SAR

HEAD SAR MEASUREMENT RESULTS															
Frequency		Modulation	UL RB Allocation	UL RB Start	Measured power		Maximum tune-up tolerance limit		Phantom Section	EUT Set-up Conditions			Measured SAR(1g) [W/kg]	Scaled factor	Reported SAR(1g) *1 [W/kg]
Channel	[MHz]				[dBm]	[mW]	[dBm]	[mW]		Antenna	Position	Separation [mm]			
Step.1 Worst position search															
20850	2510	QPSK	1	49	23.05	201.84	24.00	251.19	Flat	Inner	Left cheek	0	**0.345**	**1.245**	**0.429**
20850	2510	QPSK	1	49	23.05	201.84	24.00	251.19	Flat	Inner	Left tilt	0	**0.127**	**1.245**	**0.158**
20850	2510	QPSK	1	49	23.05	201.84	24.00	251.19	Flat	Inner	Right cheek	0	**0.185**	**1.245**	**0.230**
20850	2510	QPSK	1	49	23.05	201.84	24.00	251.19	Flat	Inner	Right tilt	0	**0.152**	**1.245**	**0.189**
Step.2 Mode changge															
20850	2510	QPSK	50	24	22.20	165.96	24.00	251.19	Flat	Inner	Left cheek	0	**0.309**	**1.514**	**0.468**

*1 Reported SAR= Maximum tune-up tolerance limit [mW] / Measured power [mW] · Measured SAR [W/kg]

9.18 LTE Band VII Body-worn and Body(Hotspot) SAR

(1)Method of measurement

Step.1 The searching for the worst position

QPSK modulation at the largest channel bandwidth, testing for 1 RB allocation configurations is initially performed for the channel/RB offset combination with the highest output power among 1 RB allocation configurations.

Step.2 Mode change

QPSK modulation at the largest channel bandwidth, testing for 50% RB and 100%RB allocation configurations is initially performed for the channel/RB offset combination with the highest output power among 50% RB and 100%RB allocation configurations.

Step.3 The changing to the other channels

The test was performed at the worst condition of Step1 and Step 2.

Step4 The repeated measurement

The test was performed at the worst condition of 2600MHz Band.

Note:

1) Per KDB 941225 D05 SAR for LTE Devices v02, SAR test reduction is applied using the following criteria:

- Beginning with QPSK modulation at the largest channel bandwidth, testing for 1 RB allocation configurations is initially performed for the channel/RB offset combination with the highest output power among 1 RB allocation configurations.
  - When the reported SAR for the initial measurement is < 0.8 W/kg, no further assessment is required for 1 RB allocation configurations.
  - When the reported SAR for the initial measurement is > 0.8 W/kg, the remaining channels are evaluated using the RB offset with the highest output power within the respective channels.
  - For all reported SAR that is > 1.45 W/kg, SAR, SAR is required for the remaining RB offset configurations of the same channel.
- The same procedures apply to QPSK 50% RB allocation configurations at the largest channel bandwidth.
- Testing for 100% RB allocation configurations at the largest channel bandwidth is performed for the channel, across low, mid and high, with the highest output power, when the highest reported SAR for either 1 RB or 50% RB is ≥ 0.8 W/kg, or when the maximum output power among 100% RB allocation configurations is greater than the maximum output power among either 1 RB or 25% RB allocation configurations.
  - Testing for the remaining channels in 100% RB allocation configurations is required only when reported SAR for the initial 100% RB allocation configuration is > 1.45 W/kg.
- Testing for higher order modulations (16-QAM or 64-QAM) is required only when the highest reported SAR for QPSK is > 1.45 W/Kg or if its output power is more than 0.5 dB higher than that of QPSK.
- Testing for the other channel bandwidths is required only when the highest reported SAR for the highest channel bandwidth is > 1.45 W/Kg or if its output power is more than 0.5 dB higher than that of the highest channel bandwidth.

2) According to KDB 447498 D01 General RF Exposure Guidance v05, testing of other required channels within the operating mode of a frequency band is not required when the reported 1-g or 10-g SAR for the mid-band or highest output power channel is

≤ 0.8 W/kg or 2.0 W/kg, for 1-g or 10-g respectively, when the transmission band is ≤ 100 MHz
≤ 0.6 W/kg or 1.5 W/kg, for 1-g or 10-g respectively, when the transmission band is between 100 MHz and 200 MHz
≤ 0.4 W/kg or 1.0 W/kg, for 1-g or 10-g respectively, when the transmission band is ≥ 200 MHz

3) Repeated measurement is not required when the original highest measured SAR is < 0.80 W/kg.
When the original highest measured SAR is ≥ 0.80 W/kg, repeat that measurement once.
Perform a second repeated measurement only if the ratio of largest to smallest SAR for the original and first repeated measurements is > 1.20 or when the original or repeated measurement is ≥ 1.45 W/kg (~ 10% from the 1-g SAR limit).

(2)Simulated Tissue Liquid Parameter confirmation

The dielectric parameters were checked prior to assessment using the R140 Reflectometer and DAKS-3.5 probe.
The dielectric parameters measurement is reported in each correspondent section.

DIELECTRIC PARAMETERS MEASUREMENT RESULTS											
Date	Ambient Temp. [deg.c]	Relative Humidity [%]	Liquid type	Liquid Temp. [deg.c]	Measured Frequency [MHz]	Parameters	Target Value	Measured	Deviation [%]	Limit [%]	Remark
1-Feb	24.5	33	MSL2450	23.5	2450	εr	52.7	51.2	-2.9	+/-5	*1
						σ [mho/m]	1.95	1.97	0.9	+/-5	
1-Feb	24.5	33	MSL2450	23.5	2510	εr	52.6	51.1	-3.0	+/-5	*2
						σ [mho/m]	2.04	2.07	1.4	+/-5	
2-Feb	24.5	33	MSL2450	23.5	2510	εr	52.6	50.6	-3.9	+/-5	*2
						σ [mho/m]	2.04	2.08	1.9	+/-5	
2-Feb	24.5	33	MSL2450	23.5	2535	εr	50.6	50.5	-0.2	+/-5	*2
						σ [mho/m]	2.07	2.11	2.0	+/-5	
2-Feb	24.5	33	MSL2450	23.5	2560	εr	52.6	50.4	-4.2	+/-5	*2
						σ [mho/m]	2.11	2.14	1.6	+/-5	
-	-	-	-	-	3000	εr	52.0	-	-	-	*1
						σ [mho/m]	2.73	-	-	-	

εr: Relative Permittivity / σ : Coductivity
*1 The Target value is a parameter defined in KDB 865664D01.
*2 The dielectric parameters should be linearly interpolated between the closest pair of target frequencies to determine the applicable

(3)Result of Body and Hotspot SAR

SAR MEASUREMENT RESULTS															
Frequency		Modulation	UL RB Allocation	UL RB Start	Measured power		Maximum tune-up tolerance limit		Phantom Section	EUT Set-up Conditions			Measured SAR(1g) [W/kg]	Scaled factor	Reported SAR(1g) *1 [W/kg]
Channel	[MHz]				[dBm]	[mW]	[dBm]	[mW]		Antenna	Position	Separation [mm]			
Step.1 Worst position search															
20850	2510	QPSK	1	49	23.05	201.84	24.00	251.19	Flat	Inner	Front	10	**0.770**	**1.245**	**0.958**
20850	2510	QPSK	1	49	23.05	201.84	24.00	251.19	Flat	Inner	Rear	10	**0.731**	**1.245**	**0.910**
20850	2510	QPSK	1	0	18.11	64.71	19.00	79.43	Flat	Inner	Bottom	10	**0.857**	**1.227**	**1.052**
20850	2510	QPSK	1	0	18.11	64.71	19.00	79.43	Flat	Inner	Left	10	**0.021**	**1.227**	**0.026**
20850	2510	QPSK	1	0	18.11	64.71	19.00	79.43	Flat	Inner	Right	10	**0.207**	**1.227**	**0.254**
Step2. Mode change															
20850	2510	QPSK	50	0	18.23	66.53	19.00	79.43	Flat	Inner	Bottom	10	**0.733**	**1.194**	**0.875**
20850	2510	QPSK	100	0	18.16	65.46	19.00	79.43	Flat	Inner	Bottom	10	**0.709**	**1.213**	**0.860**
Step.3 Channel changge															
21100	2535	QPSK	1	99	22.91	195.43	24.00	251.19	Flat	Inner	Front	10	**0.760**	**1.285**	**0.977**
21350	2560	QPSK	1	99	23.02	200.45	24.00	251.19	Flat	Inner	Front	10	**0.787**	**1.253**	**0.986**
21100	2535	QPSK	1	99	22.91	195.43	24.00	251.19	Flat	Inner	Rear	10	**0.472**	**1.285**	**0.607**
21350	2560	QPSK	1	99	23.02	200.45	24.00	251.19	Flat	Inner	Rear	10	**0.425**	**1.253**	**0.533**
21100	2535	QPSK	1	99	17.94	62.23	19.00	79.43	Flat	Inner	Bottom	10	**0.630**	**1.276**	**0.804**
21350	2560	QPSK	1	99	18.10	64.57	19.00	79.43	Flat	Inner	Bottom	10	**0.648**	**1.230**	**0.797**
21100	2535	QPSK	50	24	17.95	62.37	19.00	79.43	Flat	Inner	Bottom	10	**0.664**	**1.274**	**0.846**
21350	2560	QPSK	50	49	18.19	65.92	19.00	79.43	Flat	Inner	Bottom	10	**0.656**	**1.205**	**0.791**
Step4. Repeat Measurement															
20850	2510	QPSK	1	0	18.11	64.71	19.00	79.43	Flat	Inner	Bottom	10	**0.843**	**1.227**	**1.035**

*1 Reported SAR= Maximum tune-up tolerance limit [mW] / Measured power [mW] · Measured SAR [W/kg]
*2 For Bottom, Left and Right positions, SAR is measured with power reduction mode

9.19 LTE Band XVII Head SAR

Step.1 The searching for the worst position

QPSK modulation at the largest channel bandwidth, testing for 1 RB allocation configurations is initially performed for the channel/RB offset combination with the highest output power among 1 RB allocation configurations.

Step.2 Mode change

QPSK modulation at the largest channel bandwidth, testing for 50% RB allocation configurations is initially performed for the channel/RB offset combination with the highest output power among 1 RB allocation configurations.

Note:

1) Per KDB 941225 D05 SAR for LTE Devices v02, SAR test reduction is applied using the following criteria:
   - Beginning with QPSK modulation at the largest channel bandwidth, testing for 1 RB allocation configurations is initially performed for the channel/RB offset combination with the highest output power among 1 RB allocation configurations.
     - When the reported SAR for the initial measurement is < 0.8 W/kg, no further assessment is required for 1 RB allocation configurations.
     - When the reported SAR for the initial measurement is > 0.8 W/kg, the remaining channels are evaluated using the RB offset with the highest output power within the respective channels.
     - For all reported SAR that is > 1.45 W/kg, SAR, SAR is required for the remaining RB offset configurations of the same channel.
   - The same procedures apply to QPSK 50% RB allocation configurations at the largest channel bandwidth.
   - Testing for 100% RB allocation configurations at the largest channel bandwidth is performed for the channel, across low, mid and high, with the highest output power, when the highest reported SAR for either 1 RB or 50% RB is ≥ 0.8 W/kg, or when the maximum output power among 100% RB allocation configurations is greater than the maximum output power among either 1 RB or 25% RB allocation configurations.
     - Testing for the remaining channels in 100% RB allocation configurations is required only when reported SAR for the initial 100% RB allocation configuration is > 1.45 W/kg.
   - Testing for higher order modulations (16-QAM or 64-QAM) is required only when the highest reported SAR for QPSK is > 1.45 W/Kg or if its output power is more than 0.5 dB higher than that of QPSK.
   - Testing for the other channel bandwidths is required only when the highest reported SAR for the highest channel bandwidth is > 1.45 W/Kg or if its output power is more than 0.5 dB higher than that of the highest channel bandwidth.

2) According to KDB 447498 D01 General RF Exposure Guidance v05, testing of other required channels within the operating mode of a frequency band is not required when the reported 1-g or 10-g SAR for the mid-band or highest output power channel is

≤ 0.8 W/kg or 2.0 W/kg, for 1-g or 10-g respectively, when the transmission band is ≤ 100 MHz
≤ 0.6 W/kg or 1.5 W/kg, for 1-g or 10-g respectively, when the transmission band is between 100 MHz and 200 MHz
≤ 0.4 W/kg or 1.0 W/kg, for 1-g or 10-g respectively, when the transmission band is ≥ 200 MHz

3) Repeated measurement is not required when the original highest measured SAR is < 0.80 W/kg.
When the original highest measured SAR is ≥ 0.80 W/kg, repeat that measurement once.
Perform a second repeated measurement only if the ratio of largest to smallest SAR for the original and first repeated measurements is > 1.20 or when the original or repeated measurement is ≥ 1.45 W/kg (~ 10% from the 1-g SAR limit).

(2)Simulated Tissue Liquid Parameter confirmation

The dielectric parameters were checked prior to assessment using the R140 Reflectometer and DAKS-3.5 probe.
The dielectric parameters measurement is reported in each correspondent section.

DIELECTRIC PARAMETERS MEASUREMENT RESULTS											
Date	Ambient Temp. [deg.c]	Relative Humidity [%]	Liquid type	Liquid Temp. [deg.c]	Measured Frequency [MHz]	Parameters	Target Value	Measured	Deviation [%]	Limit [%]	Remark
-	-	-	-	-	450	εr	43.5	-	-	-	*1
						σ [mho/m]	0.87	-	-	-	
4-Feb	24.0	30	HSL750	23.5	709	εr	42.2	41.5	-1.6	+/-5	*2
						σ [mho/m]	0.89	0.89	-0.5	+/-5	
4-Feb	24.0	30	HSL750	23.5	710	εr	42.2	41.4	-1.8	+/-5	*2
						σ [mho/m]	0.89	0.89	-0.3	+/-5	
-	-	-	-	-	835	εr	41.5	-	-	-	*1
						σ [mho/m]	0.90	-	-	-	

εr: Relative Permittivity / σ : Coductivity
*1 The Target value is a parameter defined in KDB865664D01.
*2 The dielectric parameters should be linearly interpolated between the closest pair of target frequencies to determine the applicable dielectric parameters corresponding to the device test frequency.

(3)Result of Head SAR

HEAD SAR MEASUREMENT RESULTS															
Frequency		Modulation	UL RB Allocation	UL RB Start	Measured power		Maximum tune-up tolerance limit		Phantom Section	EUT Set-up Conditions			Measured SAR(1g) [W/kg]	Scaled factor	Reported SAR(1g) *1 [W/kg]
Channel	[MHz]				[dBm]	[mW]	[dBm]	[mW]		Antenna	Position	Separation [mm]			
Step.1 Worst position search															
23780	709	QPSK	1	49	22.76	188.80	24.00	251.19	Flat	Inner	Left cheek	0	**0.341**	**1.330**	**0.454**
23780	709	QPSK	1	49	22.76	188.80	24.00	251.19	Flat	Inner	Left tilt	0	**0.198**	**1.330**	**0.263**
23780	709	QPSK	1	49	22.76	188.80	24.00	251.19	Flat	Inner	Right cheek	0	**0.312**	**1.330**	**0.415**
23780	709	QPSK	1	49	22.76	188.80	24.00	251.19	Flat	Inner	Right tilt	0	**0.173**	**1.330**	**0.230**
Step.2 Mode changge															
23790	710	QPSK	25	0	21.65	146.22	23.00	199.53	Flat	Inner	Left cheek	0	**0.232**	**1.365**	**0.317**

*1 Reported SAR= Maximum tune-up tolerance limit [mW] / Measured power [mW] · Measured SAR [W/kg]

9.20 LTE Band XVII Body-worn and Body(Hotspot) SAR

(1)Method of measurement

Step.1 The searching for the worst position

QPSK modulation at the largest channel bandwidth, testing for 1 RB allocation configurations is initially performed for the channel/RB offset combination with the highest output power among 1 RB allocation configurations.

Step.2 Mode change

QPSK modulation at the largest channel bandwidth, testing for 50% RB allocation configurations is initially performed for the channel/RB offset combination with the highest output power among 1 RB allocation configurations.

Step.3 The changing to the other channels

The test was performed at the worst condition of Step1 and Step 2.

Note:

1) Per KDB 941225 D05 SAR for LTE Devices v02, SAR test reduction is applied using the following criteria:

- Beginning with QPSK modulation at the largest channel bandwidth, testing for 1 RB allocation configurations is initially performed for the channel/RB offset combination with the highest output power among 1 RB allocation configurations.
  - When the reported SAR for the initial measurement is < 0.8 W/kg, no further assessment is required for 1 RB allocation configurations.
  - When the reported SAR for the initial measurement is > 0.8 W/kg, the remaining channels are evaluated using the RB offset with the highest output power within the respective channels.
  - For all reported SAR that is > 1.45 W/kg, SAR, SAR is required for the remaining RB offset configurations of the same channel.
- The same procedures apply to QPSK 50% RB allocation configurations at the largest channel bandwidth.
- Testing for 100% RB allocation configurations at the largest channel bandwidth is performed for the channel, across low, mid and high, with the highest output power, when the highest reported SAR for either 1 RB or 50% RB is ≥ 0.8 W/kg, or when the maximum output power among 100% RB allocation configurations is greater than the maximum output power among either 1 RB or 25% RB allocation configurations.
  - Testing for the remaining channels in 100% RB allocation configurations is required only when reported SAR for the initial 100% RB allocation configuration is > 1.45 W/kg.
- Testing for higher order modulations (16-QAM or 64-QAM) is required only when the highest reported SAR for QPSK is > 1.45 W/Kg or if its output power is more than 0.5 dB higher than that of QPSK.
- Testing for the other channel bandwidths is required only when the highest reported SAR for the highest channel bandwidth is > 1.45 W/Kg or if its output power is more than 0.5 dB higher than that of the highest channel bandwidth.

2) According to KDB 447498 D01 General RF Exposure Guidance v05, testing of other required channels within the operating mode of a frequency band is not required when the reported 1-g or 10-g SAR for the mid-band or highest output power channel is

≤ 0.8 W/kg or 2.0 W/kg, for 1-g or 10-g respectively, when the transmission band is ≤ 100 MHz
≤ 0.6 W/kg or 1.5 W/kg, for 1-g or 10-g respectively, when the transmission band is between 100 MHz and 200 MHz
≤ 0.4 W/kg or 1.0 W/kg, for 1-g or 10-g respectively, when the transmission band is ≥ 200 MHz

3) Repeated measurement is not required when the original highest measured SAR is < 0.80 W/kg.
When the original highest measured SAR is ≥ 0.80 W/kg, repeat that measurement once.
Perform a second repeated measurement only if the ratio of largest to smallest SAR for the original and first repeated measurements is > 1.20 or when the original or repeated measurement is ≥ 1.45 W/kg (~ 10% from the 1-g SAR limit).

(2)Simulated Tissue Liquid Parameter confirmation

The dielectric parameters were checked prior to assessment using the R140 Reflectometer and DAKS-3.5 probe.
The dielectric parameters measurement is reported in each correspondent section.

DIELECTRIC PARAMETERS MEASUREMENT RESULTS											
Date	Ambient Temp. [deg.c]	Relative Humidity [%]	Liquid type	Liquid Temp. [deg.c]	Measured Frequency [MHz]	Parameters	Target Value	Measured	Deviation [%]	Limit [%]	Remark
-	-	-	-	-	450	εr	56.7	-	-	-	*1
						σ [mho/m]	0.94	-	-	-	
4-Feb	24.0	30	MSL750	23.5	709	εr	55.7	54.2	-2.7	+/-5	*2
						σ [mho/m]	0.96	0.92	-4.4	+/-5	
4-Feb	24.0	30	MSL750	23.5	710	εr	55.7	54.1	-2.8	+/-5	*2
						σ [mho/m]	0.96	0.92	-4.2	+/-5	
-	-	-	-	-	835	εr	55.2	-	-	-	*1
						σ [mho/m]	0.97	-	-	-	

εr: Relative Permittivity / σ : Coductivity
*1 The Target value is a parameter defined in KDB865664D01.
*2 The dielectric parameters should be linearly interpolated between the closest pair of target frequencies to determine the applicable dielectric parameters corresponding to the device test frequency.

(3) Result of Body-worn and Body(Hotspot) SAR

SAR MEASUREMENT RESULTS															
Frequency		Modulation	UL RB Allocation	UL RB Start	Measured power		Maximum tune-up tolerance limit		Phantom Section	EUT Set-up Conditions			Measured SAR(1g) [W/kg]	Scaled factor	Reported SAR(1g) *1 [W/kg]
Channel	[MHz]				[dBm]	[mW]	[dBm]	[mW]		Antenna	Position	Separation [mm]			
Step.1 Worst position search															
23780	709	QPSK	1	49	22.76	188.80	24.00	251.19	Flat	Inner	Front	10	**0.482**	**1.330**	**0.641**
23780	709	QPSK	1	49	22.76	188.80	24.00	251.19	Flat	Inner	Rear	10	**0.409**	**1.330**	**0.544**
23780	709	QPSK	1	0	22.76	188.80	24.00	251.19	Flat	Inner	Bottom	10	**0.106**	**1.330**	**0.141**
23780	709	QPSK	1	0	22.76	188.80	24.00	251.19	Flat	Inner	Left	10	**0.295**	**1.330**	**0.392**
23780	709	QPSK	1	0	22.76	188.80	24.00	251.19	Flat	Inner	Right	10	**0.247**	**1.330**	**0.329**
Step2. Mode change															
23780	709	QPSK	25(50%)	0	21.65	146.22	23.00	199.53	Flat	Inner	Front	10	**0.427**	**1.365**	**0.583**

SECTION 10 Simultaneous transmission analysis

All Wi-Fi 1-g SAR values were taken from results recorded in SAR report 10636726H-J

All Simultaneous Transmission SAR analysis applies scaling in accordance with the scaled values documented in this report (for the WWAN radios) and the aforementioned SAR report (10636726H-J) with scaling applied (for the WLAN radios).

WLAN 5GHz and WWAN cannot be transmitted simultaneously.

10.1 Sum of the SAR for GSM & WLAN

Test Position	Data			Σ 1-g SAR [W/kg]
	GSM850 [W/kg]	GSM1900 [W/kg]	WiFi [W/kg]	
Left cheek	0.421		0.234	0.655
		0.456	0.234	0.690
Left tilt	0.276		0.150	0.426
		0.078	0.150	0.228
Right cheek	0.417		0.077	0.494
		0.202	0.077	0.279
Right tilt	0.273		0.078	0.351
		0.058	0.078	0.136
Front	0.879		0.031	0.910
		0.975	0.031	1.006
Rear	0.607		0.031	0.638
		0.797	0.031	0.828
Bottom	0.192		0.002	0.194
		1.511	0.002	1.513
Left	0.297		0.028	0.325
		0.175	0.028	0.203
Right	0.758		0.012	0.770
		0.428	0.012	0.440

Conclusion:
Simultaneous transmission SAR measurement (Volume Scan) is not required because the either sum of the 1-g SAR is < 1.6 W/kg or the SPLSR is < 0.04 for all circumstances that require SPLSR calculation.

10.2 Sum of the SAR for WCDMA & WLAN

Test Position	Data				Σ 1-g SAR [W/kg]
	Band II [W/kg]	Band IV [W/kg]	Band V [W/kg]	WiFi [W/kg]	
Left cheek	0.291			0.234	0.525
		0.464		0.234	0.698
			0.303	0.234	0.537
Left tilt	0.080			0.150	0.230
		0.098		0.150	0.248
			0.197	0.150	0.347
Right cheek	0.175			0.077	0.252
		0.275		0.077	0.352
			0.354	0.077	0.431
Right tilt	0.094			0.078	0.172
		0.131		0.078	0.209
			0.248	0.078	0.326
Front	1.223			0.031	1.254
		0.914		0.031	0.945
			0.707	0.031	0.738
Rear	1.163			0.031	1.194
		1.120		0.031	1.151
			0.535	0.031	0.566
Bottom	1.084			0.002	1.086
		0.973		0.002	0.975
			0.164	0.002	0.166
Left	0.642			0.028	0.670
		0.136		0.028	0.164
			0.923	0.028	0.951
Right	0.097			0.012	0.109
		0.175		0.012	0.187
			0.233	0.012	0.245

Conclusion:

Simultaneous transmission SAR measurement (Volume Scan) is not required because the either sum of the 1-g SAR is < 1.6 W/kg or the SPLSR is < 0.04 for all circumstances that require SPLSR calculation.

10.3 Sum of the SAR for LTE Band II, IV & WLAN

Test Position	Data			Σ 1-g SAR [W/kg]
	Band II [W/kg]	Band IV [W/kg]	WiFi [W/kg]	
Left cheek	0.258		0.234	0.492
		0.446	0.234	0.680
Left tilt	0.061		0.150	0.211
		0.104	0.150	0.254
Right cheek	0.175		0.077	0.252
		0.221	0.077	0.298
Right tilt	0.084		0.078	0.162
		0.115	0.078	0.193
Front	1.307		0.031	1.338
		0.910	0.031	0.941
Rear	1.155		0.031	1.186
		0.943	0.031	0.974
Bottom	1.088		0.002	1.090
		1.178	0.002	1.180
Left	0.239		0.028	0.267
		0.124	0.028	0.152
Right	0.134		0.012	0.146
		0.253	0.012	0.265

Conclusion:

Simultaneous transmission SAR measurement (Volume Scan) is not required because the either sum of the 1-g SAR is < 1.6 W/kg or the SPLSR is < 0.04 for all circumstances that require SPLSR calculation.

10.4 Sum of the SAR for LTE Band V, VII, XVII & WLAN

Test Position	Data				Σ 1-g SAR [W/kg]
	Band V [W/kg]	Band VII [W/kg]	Band XVII [W/kg]	WiFi [W/kg]	
Left cheek	0.312			0.234	0.546
		0.468		0.234	0.702
			0.454	0.234	0.688
Left tilt	0.231			0.150	0.381
		0.158		0.150	0.308
			0.263	0.150	0.413
Right cheek	0.355			0.077	0.432
		0.230		0.077	0.307
			0.415	0.077	0.492
Right tilt	0.256			0.078	0.334
		0.189		0.078	0.267
			0.230	0.078	0.308
Front	0.581			0.031	0.612
		0.986		0.031	1.017
			0.641	0.031	0.672
Rear	0.578			0.031	0.609
		0.910		0.031	0.941
			0.544	0.031	0.575
Bottom	0.135			0.002	0.137
		1.052		0.002	1.054
			0.141	0.002	0.143
Left	0.174			0.028	0.202
		0.026		0.028	0.054
			0.392	0.028	0.420
Right	0.860			0.012	0.872
		0.254		0.012	0.266
			0.329	0.012	0.341

Conclusion:

Simultaneous transmission SAR measurement (Volume Scan) is not required because the either sum of the 1-g SAR is < 1.6 W/kg or the SPLSR is < 0.04 for all circumstances that require SPLSR calculation.

SECTION 11 Test instruments

Control No.	Instrument	Manufacturer	Model No	Serial No	Test Item	Calibration Date * Interval(month)
MOS-37	Digital thermometer	LKM electronic	DTM3000	-	SAR	2014/07/06 * 12
MDPK-03	Dielectric assessment kit	Schmid&Partner Engineering AG	DAK-3.5	0008	SAR	2014/03/04 * 12
COTS-MSAR-04	Dielectric assessment kit	Schmid&Partner Engineering AG	DAK		SAR	-
MDAE-02	Data Acquisition Electronics	Schmid&Partner Engineering AG	DAE4	1369	SAR	2014/05/14 * 12
MPB-08	Dosimetric E-Field Probe	Schmid&Partner Engineering AG	EX3DV4	3917	SAR	2014/05/14 * 12
MPSAM-04	SAM Phantom	Schmid&Partner Engineering AG	QD000P40CD	1762	SAR	2014/06/03 * 12
MPF-05	2mm Oval Flat Phantom	Schmid&Partner Engineering AG	QDOVA001BB	1095	SAR	2015/01/14 * 12
MDH-04	Device holder	Schmid&Partner Engineering AG	Mounting device for transmitter	-	SAR	Pre Check
MOS-30	Thermo-Hygrometer	Custom	CTH-201	3001	SAR	2014/07/06 * 12
MOS-35	Digital thermometer	HANNA	Checktemp 4	-	SAR	2014/07/06 * 12
COTS-MSAR-03	Dasy5	Schmid&Partner Engineering AG	DASY5	-	SAR	-
MRBT-03	SAR robot	Schmid&Partner Engineering AG	TX60 Lspeag	F13/5PP1D1/A/01	SAR	2014/06/24 * 12
MDAE-03	Data Acquisition Electronics	Schmid&Partner Engineering AG	DAE4	1372	SAR	2014/06/18 * 12
MPB-09	Dosimetric E-Field Probe	Schmid&Partner Engineering AG	EX3DV4	3922	SAR	2014/06/13 * 12
MPSAM-03	SAM Phantom	Schmid&Partner Engineering AG	QD000P40CD	1764	SAR	2014/06/03 * 12
MPF-03	2mm Oval Flat Phantom	Schmid&Partner Engineering AG	QDOVA001BB	1203	SAR	2014/06/03 * 12
MDH-03	Device holder	Schmid&Partner Engineering AG	Mounting device for transmitter	-	SAR	Pre Check
MRBT-04	SAR robot	Schmid&Partner Engineering AG	TX60 Lspeag	F13/5PP1A1/A/01	SAR	2014/06/23 * 12
MDAE-01	Data Acquisition Electronics	Schmid&Partner Engineering AG	DAE4	509	SAR	2014/07/28 * 12
MPB-07	Dosimetric E-Field Probe	Schmid&Partner Engineering AG	EX3DV4	3825	SAR	2014/12/16 * 12
MPSAM-02	SAM Phantom	Schmid&Partner Engineering AG	QD000P40CB	1333	SAR	2014/05/30 * 12
MPF-02	2mm Oval Flat Phantom	Schmid&Partner Engineering AG	QDOVA001BB	1045	SAR	2014/05/30 * 12
MDH-01	Device holder	Schmid&Partner Engineering AG	Mounting device for transmitter	-	SAR	Pre Check
MOS-10	Digtal thermometer	HANNA	Checktemp-2	MOS-10	SAR	2014/08/06 * 12
MOS-26	Thermo-Hygrometer	CUSTOM	CTH-201	A08Q29	SAR	2014/05/20 * 12
MRBT-02	SAR robot	Schmid&Partner Engineering AG	TX60 Lspeag	F10/5E3LA1/A/01	SAR	2014/05/09 * 12
MPM-15	Power Meter	Agilent	N1914A	MY53060017	SAR	2014/06/20 * 12
MPSE-20	Power sensor	Agilent	N8482H	MY53050001	SAR	2014/06/20 * 12
MPSE-21	Power sensor	Agilent	N8482H	MY52460010	SAR	2014/07/02 * 12
MHDC-21	Dual Directional Coupler	Agilent	778D	MY52180243	SAR(0.1-2GHz)	Pre Check
MHDC-22	Directional Coupler	Agilent	87300B	14893A	SAR(2-18GHz)	Pre Check
MRFA-24	Pre Amplifier	R&K	R&K CGA020M602-2633R	B30550	SAR	2014/06/19 * 12

Control No.	Instrument	Manufacturer	Model No	Serial No	Test Item	Calibration Date * Interval(month)
MSG-13	Signal Generator	Rohde & Schwarz	SMA 100A	103764	SAR	2014/06/19 * 12
MDA-05	Dipole Antenna	Schmid&Partner Engineering AG	D900V2	155	SAR(D900)	2013/12/06 * 24
MDA-06	Dipole Antenna	Schmid&Partner Engineering AG	D1800V2	2d040	SAR(D1800)	2014/12/25 * 24
MDA-07	Dipole Antenna	Schmid&Partner Engineering AG	D2450V2	713	SAR(D2450)	2013/09/10 * 24
MDA-10	Dipole Antenna	Schmid&Partner Engineering AG	D2000V2	1029	SAR(D2000)	2012/06/15 * 36
MDA-19	Dipole Antenna	Schmid&Partner Engineering AG	D2600V2	1030	SAR(D2600)	2013/04/23 * 24
MDA-20	Dipole Antenna	Schmid&Partner Engineering AG	D750V3	1058	SAR(D750)	2014/05/30 * 12
HSL750				Daily check Target value ± 5%		
MSL750				Daily check Target value ± 5%		
HSL900				Daily check Target value ± 5%		
MSL900				Daily check Target value ± 5%		
HSL1800				Daily check Target value ± 5%		
MSL1800				Daily check Target value ± 5%		
MSL1950				Daily check Target value ± 5%		
HSL2450				Daily check Target value ± 5%		
MSL2450				Daily check Target value ± 5%		
SAR room				Daily check Ambient Noise<0.012W/kg		

The expiration date of the calibration is the end of the expired month.
All equipment is calibrated with valid calibrations. Each measurement data is traceable to the national or international standards.

As for some calibrations performed after the tested dates, those test equipment have been controlled by means of an unbroken chains of calibrations.

APPENDIX 1 : SAR Measurement data

1. Evaluation procedure

The evaluation was performed with the following procedure:

Step 1: Measurement of the E-field at a fixed location above the ear point or central position of flat phantom was used as a reference value for assessing the power drop.

Step 2: The SAR distribution at the exposed side of head or body position was measured at a distance of each device from the inner surface of the shell. The area covered the entire dimension of the antenna of EUT and the horizontal grid spacing was 15 mm x 15 mm, 12 mm x 12 mm or 10mm x 10mm. Based on these data, the area of the maximum absorption was determined by spline interpolation.

Step 3: Around this point found in the Step 2 (area scan), a volume of 30mm x 30mm x 30mm or more was assessed by measuring 7 x 7 x 7 points at least for below 3GHz and a volume of 28 mm x 28mm x 22.5mm or more was assessed by measuring 8 x 8 x 6(ratio step method (*1)) points at least for 5GHz band.

And for any secondary peaks found in the Step2 which are within 2dB of maximum peak and not with this Step3 (Zoom scan) is repeated. On the basis of this data set, the spatial peak SAR value was evaluated under the following procedure:

(1). The data at the surface were extrapolated, since the center of the dipoles is 1mm(EX3DV4) away from the tip of the probe and the distance between the surface and the lowest measuring point is 1.3 mm. The extrapolation was based on a least square algorithm [4]. A polynomial of the fourth order was calculated through the points in z-axes.
This polynomial was then used to evaluate the points between the surface and the probe tip.

(2). The maximum interpolated value was searched with a straightforward algorithm. Around this maximum the SAR values averaged over the spatial volumes (1 g or 10 g) were computed by the 3D-Spline interpolation algorithm. The 3D-Spline is composed of three one-dimensional splines with the “Not a knot"-condition (in x, y and z-directions) [4], [5]. The volume was integrated with the trapezoidal-algorithm. One thousand points (10 x 10 x 10) were interpolated to calculate the average.

(3). All neighboring volumes were evaluated until no neighboring volume with a higher average value was found.

Step 4: Re-measurement of the E-field at the same location as in Step 1.

***1. Ratio step method parameters used;**
The first measurement point: 2mm from the phantom surface, the initial grid separation: 2mm, subsequent graded grid ratio: 1.5
These parameters comply with the requirement of the KDB 865664D01.

2. Measurement data

1. GSM850 Head

GSM850 GPRS 2slots 836.6MHz Left cheek
Communication System: UID 0, Generic GSM (0); Communication System Band: GSM 850 (824.0 - 849.0 MHz);
Frequency: 836.6 MHz;Duty Cycle: 1:4.19952
Medium parameters used: f = 837 MHz; σ = 0.935 S/m; εr = 43.002; ρ = 1000 kg/m^3
Phantom section: Left Section
Measurement Standard: DASY5 (IEEE/IEC/ANSI C63.19-2011)
DASY Configuration:
Probe: EX3DV4 - SN3917; ConvF(9.75, 9.75, 9.75); Calibrated: 2014/05/14;
Sensor-Surface: 2mm (Mechanical Surface Detection)
Electronics: DAE4 Sn509; Calibrated: 2014/07/28
Phantom: SAM (30deg probe tilt) with CRP v4.0; Type: QD000P40CB; Serial: TP:1333
DASY52 52.8.8(1222); SEMCAD X 14.6.10(7331)

Area Scan 2 2 (61x81x1): Interpolated grid: dx=1.500 mm, dy=1.500 mm
Maximum value of SAR (interpolated) = 0.318 W/kg

Zoom Scan 2 (9x9x7)/Cube 0: Measurement grid: dx=5mm, dy=5mm, dz=5mm
Reference Value = 4.441 V/m; Power Drift = -0.12 dB
Peak SAR (extrapolated) = 0.567 W/kg
SAR(1 g) = 0.305 W/kg; SAR(10 g) = 0.214 W/kg
Maximum value of SAR (measured) = 0.311 W/kg
Date: 2015/01/17
Ambient Temp. : 24.0 degree.C. Liquid Temp.; 23.5 degree.C.

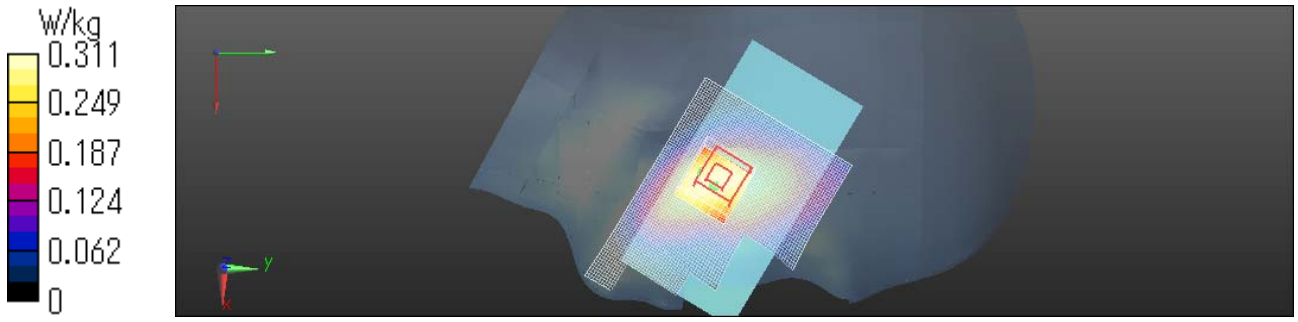

GSM850 GPRS 2slots 836.6MHz Left tilt
Communication System: UID 0, Generic GSM (0); Communication System Band: GSM 850 (824.0 - 849.0 MHz);
Frequency: 836.6 MHz;Duty Cycle: 1:4.19952
Medium parameters used: f = 837 MHz; σ = 0.935 S/m; εr = 43.002; ρ = 1000 kg/m^3
Phantom section: Left Section
Measurement Standard: DASY5 (IEEE/IEC/ANSI C63.19-2011)
DASY Configuration:
Probe: EX3DV4 - SN3917; ConvF(9.75, 9.75, 9.75); Calibrated: 2014/05/14;
Sensor-Surface: 2mm (Mechanical Surface Detection)
Electronics: DAE4 Sn509; Calibrated: 2014/07/28
Phantom: SAM (30deg probe tilt) with CRP v4.0; Type: QD000P40CB; Serial: TP:1333
DASY52 52.8.8(1222); SEMCAD X 14.6.10(7331)

Area Scan 2 2 (61x81x1): Interpolated grid: dx=1.500 mm, dy=1.500 mm
Maximum value of SAR (interpolated) = 0.224 W/kg

Zoom Scan 2 (7x7x7)/Cube 0: Measurement grid: dx=5mm, dy=5mm, dz=5mm
Reference Value = 8.352 V/m; Power Drift = 0.12 dB
Peak SAR (extrapolated) = 0.249 W/kg
SAR(1 g) = 0.200 W/kg; SAR(10 g) = 0.154 W/kg

Maximum value of SAR (measured) = 0.228 W/kg
Date: 2015/01/17
Ambient Temp. : 24.0 degree.C. Liquid Temp.; 23.5 degree.C.

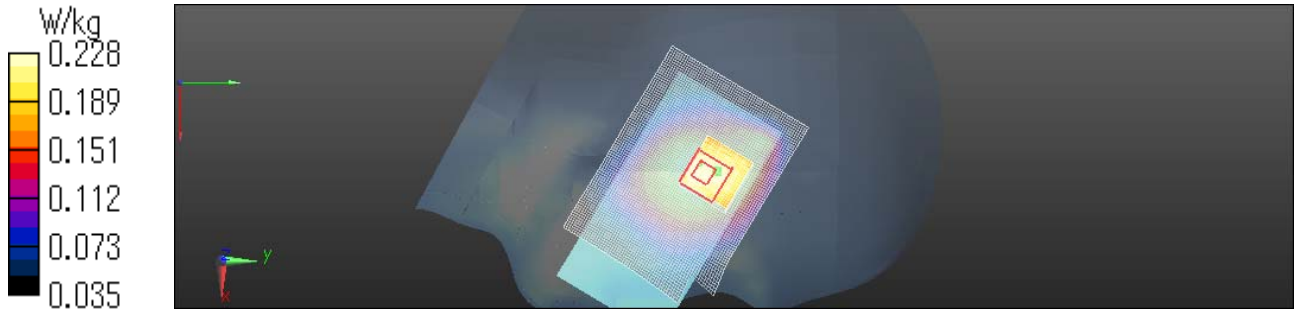

GSM850 GPRS 2slots 836.6MHz Right cheek
Communication System: UID 0, Generic GSM (0); Communication System Band: GSM 850 (824.0 - 849.0 MHz);
Frequency: 836.6 MHz;Duty Cycle: 1:4.19952
Medium parameters used: f = 837 MHz; σ = 0.935 S/m; εr = 43.002; ρ = 1000 kg/m^3
Phantom section: Right Section
Measurement Standard: DASY5 (IEEE/IEC/ANSI C63.19-2011)
DASY Configuration:
Probe: EX3DV4 - SN3917; ConvF(9.75, 9.75, 9.75); Calibrated: 2014/05/14;
Sensor-Surface: 2mm (Mechanical Surface Detection)
Electronics: DAE4 Sn509; Calibrated: 2014/07/28
Phantom: SAM (30deg probe tilt) with CRP v4.0; Type: QD000P40CB; Serial: TP:1333
DASY52 52.8.8(1222); SEMCAD X 14.6.10(7331)

Area Scan 2 2 2 (61x81x1): Interpolated grid: dx=1.500 mm, dy=1.500 mm
Maximum value of SAR (interpolated) = 0.340 W/kg

Zoom Scan (8x7x7)/Cube 0: Measurement grid: dx=5mm, dy=5mm, dz=5mm
Reference Value = 4.922 V/m; Power Drift = -0.12 dB
Peak SAR (extrapolated) = 0.366 W/kg
SAR(1 g) = 0.302 W/kg; SAR(10 g) = 0.235 W/kg
Maximum value of SAR (measured) = 0.339 W/kg
Date: 2015/01/17
Ambient Temp. : 24.0 degree.C. Liquid Temp.; 23.5 degree.C.

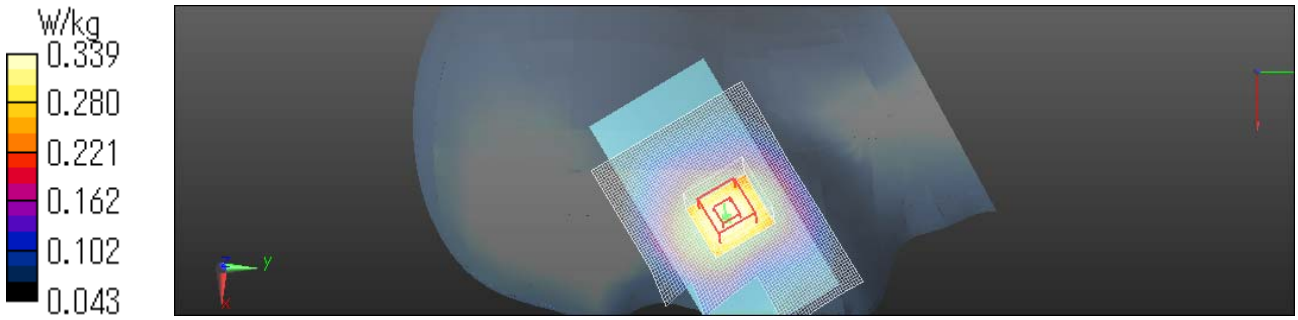

GSM850 GPRS 2slots 836.6MHz Right tilt
Communication System: UID 0, Generic GSM (0); Communication System Band: GSM 850 (824.0 - 849.0 MHz);
Frequency: 836.6 MHz;Duty Cycle: 1:4.19952
Medium parameters used: f = 837 MHz; σ = 0.935 S/m; εr = 43.002; ρ = 1000 kg/m^3
Phantom section: Right Section
Measurement Standard: DASY5 (IEEE/IEC/ANSI C63.19-2011)
DASY Configuration:
Probe: EX3DV4 - SN3917; ConvF(9.75, 9.75, 9.75); Calibrated: 2014/05/14;
Sensor-Surface: 2mm (Mechanical Surface Detection)
Electronics: DAE4 Sn509; Calibrated: 2014/07/28
Phantom: SAM (30deg probe tilt) with CRP v4.0; Type: QD000P40CB; Serial: TP:1333
DASY52 52.8.8(1222); SEMCAD X 14.6.10(7331)

Area Scan 2 2 (61x81x1): Interpolated grid: dx=1.500 mm, dy=1.500 mm
Maximum value of SAR (interpolated) = 0.240 W/kg

Zoom Scan (8x8x7)/Cube 0: Measurement grid: dx=5mm, dy=5mm, dz=5mm
Reference Value = 4.3640 V/m; Power Drift = 0.10 dB
Peak SAR (extrapolated) = 0.335 W/kg
SAR(1 g) = 0.212 W/kg; SAR(10 g) = 0.168 W/kg
Maximum value of SAR (measured) = 0.239 W/kg
Date: 2015/01/17
Ambient Temp. : 24.0 degree.C. Liquid Temp.; 23.5 degree.C.

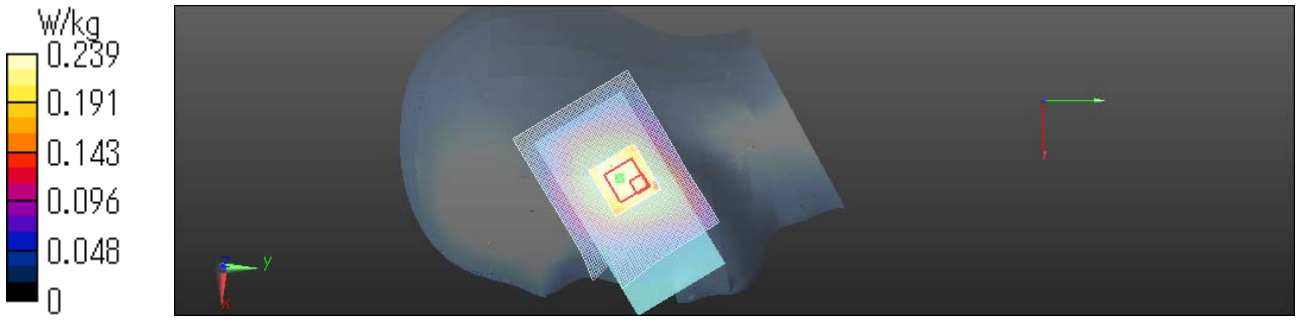

GSM850 GSM 836.6MHz Left cheek
Communication System: UID 0, Generic GSM (0); Communication System Band: GSM 850 (824.0 - 849.0 MHz);
Frequency: 836.6 MHz;Duty Cycle: 1:8.30042
Medium parameters used: f = 837 MHz; σ = 0.935 S/m; εr = 43.002; ρ = 1000 kg/m^3
Phantom section: Left Section
Measurement Standard: DASY5 (IEEE/IEC/ANSI C63.19-2011)
DASY Configuration:
Probe: EX3DV4 - SN3917; ConvF(9.75, 9.75, 9.75); Calibrated: 2014/05/14;
Sensor-Surface: 2mm (Mechanical Surface Detection (Locations From Previous Scan Used)), Sensor-Surface: 2mm (Mechanical Surface Detection)
Electronics: DAE4 Sn509; Calibrated: 2014/07/28
Phantom: SAM (30deg probe tilt) with CRP v4.0; Type: QD000P40CB; Serial: TP:1333
DASY52 52.8.8(1222); SEMCAD X 14.6.10(7331)

Area Scan 2 2 (61x81x1): Interpolated grid: dx=1.500 mm, dy=1.500 mm
Maximum value of SAR (interpolated) = 0.235 W/kg

Zoom Scan 2 (7x7x7)/Cube 0: Measurement grid: dx=5mm, dy=5mm, dz=5mm
Reference Value = 3.627 V/m; Power Drift = 0.12 dB
Peak SAR (extrapolated) = 0.256 W/kg
SAR(1 g) = 0.200 W/kg; SAR(10 g) = 0.145 W/kg

Maximum value of SAR (measured) = 0.231 W/kg
Date: 2015/01/17
Ambient Temp. : 24.0 degree.C. Liquid Temp.; 23.5 degree.C.

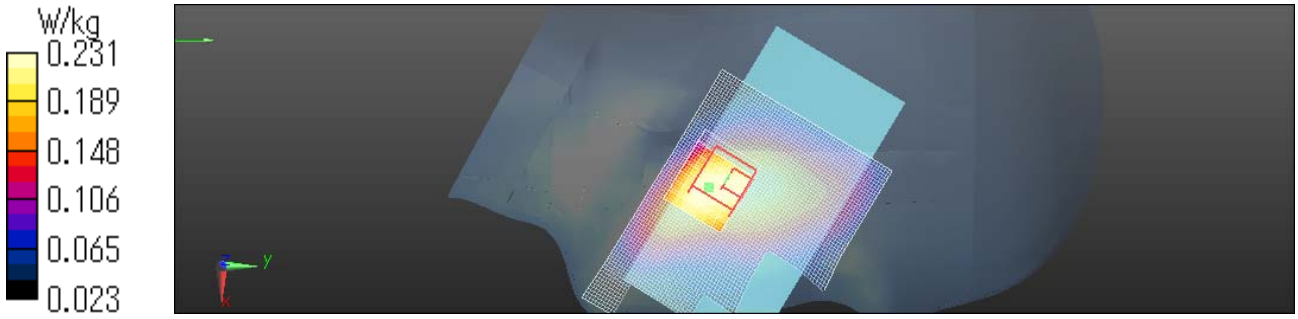

2. GSM850 Body

GSM850 GPRS 2slot 836.6MHz Front side 10mm
Communication System: UID 0, Generic GSM (0); Communication System Band: GSM 850 (824.0 - 849.0 MHz);
Frequency: 836.6 MHz; Duty Cycle: 1:4.19952
Medium parameters used: f = 837 MHz; σ = 0.963 S/m; ε_r = 54.69; ρ = 1000 kg/m^3
Phantom section: Flat Section
Measurement Standard: DASY5 (IEEE/IEC/ANSI C63.19-2011)
DASY5 Configuration
Probe: EX3DV4 - SN3917; ConvF(9.64, 9.64, 9.64); Calibrated: 2014/05/14;
Sensor-Surface: 2mm (Mechanical Surface Detection (Locations From Previous Scan Used)), Sensor-Surface: 2mm (Mechanical Surface Detection)
Electronics: DAE4 Sn509; Calibrated: 2014/07/28
Phantom: ELI v4.0 (20deg probe tilt); Type: QDOVA001BB; Serial: TP:1045
Measurement SW: DASY52, Version 52.8 (8); SEMCAD X Version 14.6.10 (7331)

Area Scan (61x81x1): Interpolated grid: dx=1.500 mm, dy=1.500 mm
Maximum value of SAR (interpolated) = 0.777 W/kg

Zoom Scan (7x7x7)/Cube 0: Measurement grid: dx=5mm, dy=5mm, dz=5mm
Reference Value = 28.85 V/m; Power Drift = -0.19 dB
Peak SAR (extrapolated) = 0.834 W/kg
SAR(1 g) = 0.635 W/kg; SAR(10 g) = 0.465 W/kg
Maximum value of SAR (measured) = 0.739 W/kg
Zoom Scan 2 (7x7x7)/Cube 0: Measurement grid: dx=5mm, dy=5mm, dz=5mm
Reference Value = 28.85 V/m; Power Drift = -0.19 dB
Peak SAR (extrapolated) = 0.768 W/kg
SAR(1 g) = 0.610 W/kg; SAR(10 g) = 0.478 W/kg
Maximum value of SAR (measured) = 0.700 W/kg
Zoom Scan 3 (7x7x7)/Cube 0: Measurement grid: dx=5mm, dy=5mm, dz=5mm
Reference Value = 28.85 V/m; Power Drift = -0.19 dB
Peak SAR (extrapolated) = 0.771 W/kg
SAR(1 g) = 0.488 W/kg; SAR(10 g) = 0.280 W/kg

Maximum value of SAR (measured) = 0.665 W/kg
Date: 2015/01/15
Ambient Temp. : 24.0 degree.C. Liquid Temp.; 23.5 degree.C.

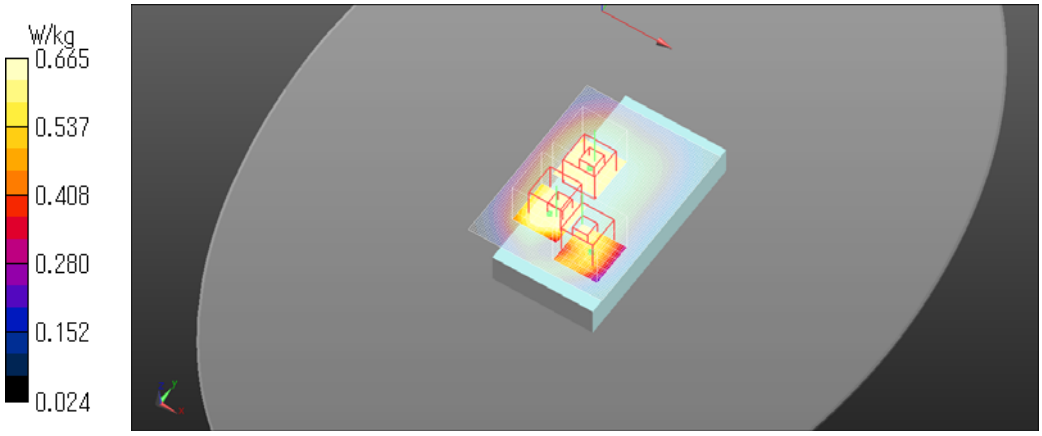

GSM850 GPRS 2slots 836.6MHz Rear side 10mm
Communication System: UID 0, Generic GSM (0); Communication System Band: GSM 850 (824.0 - 849.0 MHz);
Frequency: 836.6 MHz; Duty Cycle: 1:4.19952
Medium parameters used (interpolated): f = 836.6 MHz; σ = 0.963 S/m; ε_r = 54.69; ρ = 1000 kg/m^3
Phantom section: Flat Section
Measurement Standard: DASY5 (IEEE/IEC/ANSI C63.19-2011)
DASY5 Configuration
Probe: EX3DV4 - SN3917; ConvF(9.64, 9.64, 9.64); Calibrated: 2014/05/14;
Sensor-Surface: 2mm (Mechanical Surface Detection)
Electronics: DAE4 Sn509; Calibrated: 2014/07/28
Phantom: ELI v4.0 (20deg probe tilt); Type: QDOVA001BB; Serial: TP:1045
Measurement SW: DASY52, Version 52.8 (8); SEMCAD X Version 14.6.10 (7331)

Area Scan (111x111x1): Interpolated grid: dx=1.500 mm, dy=1.500 mm
Maximum value of SAR (interpolated) = 0.516 W/kg

Zoom Scan (7x7x7)/Cube 0: Measurement grid: dx=5mm, dy=5mm, dz=5mm
Reference Value = 22.63 V/m; Power Drift = -0.03 dB
Peak SAR (extrapolated) = 0.596 W/kg
SAR(1 g) = 0.440 W/kg; SAR(10 g) = 0.328 W/kg
Maximum value of SAR (measured) = 0.524 W/kg

Date: 2015/01/15
Ambient Temp. : 24.0 degree.C. Liquid Temp.; 23.5 degree.C.

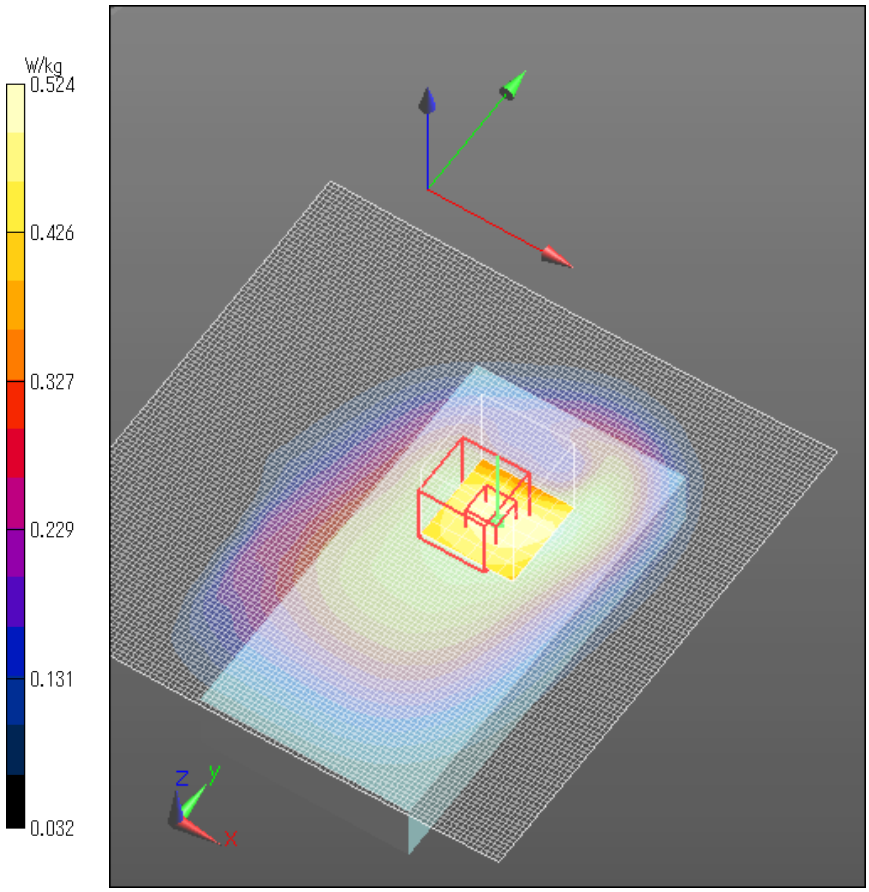

GSM850 GPRS 2slot 836.6MHz Bottom side 10mm
Communication System: UID 0, Generic GSM (0); Communication System Band: GSM 850 (824.0 - 849.0 MHz);
Frequency: 836.6 MHz; Duty Cycle: 1:4.19952
Medium parameters used: f = 837 MHz; σ = 0.963 S/m; ε_r = 54.69; ρ = 1000 kg/m^3
Phantom section: Flat Section
Measurement Standard: DASY5 (IEEE/IEC/ANSI C63.19-2011)
DASY5 Configuration
Probe: EX3DV4 - SN3917; ConvF(9.64, 9.64, 9.64); Calibrated: 2014/05/14;
Sensor-Surface: 2mm (Mechanical Surface Detection (Locations From Previous Scan Used)), Sensor-Surface: 2mm (Mechanical Surface Detection)
Electronics: DAE4 Sn509; Calibrated: 2014/07/28
Phantom: ELI v4.0 (20deg probe tilt); Type: QDOVA001BB; Serial: TP:1045
Measurement SW: DASY52, Version 52.8 (8); SEMCAD X Version 14.6.10 (7331)

Area Scan 2 (81x81x1): Interpolated grid: dx=1.500 mm, dy=1.500 mm
Maximum value of SAR (interpolated) = 0.184 W/kg

Zoom Scan (7x7x7)/Cube 0: Measurement grid: dx=5mm, dy=5mm, dz=5mm
Reference Value = 14.10 V/m; Power Drift = -0.11 dB
Peak SAR (extrapolated) = 0.214 W/kg
SAR(1 g) = 0.139 W/kg; SAR(10 g) = 0.085 W/kg
Maximum value of SAR (measured) = 0.181 W/kg
Date: 2015/01/15
Ambient Temp. : 24.0 degree.C. Liquid Temp.; 23.5 degree.C.

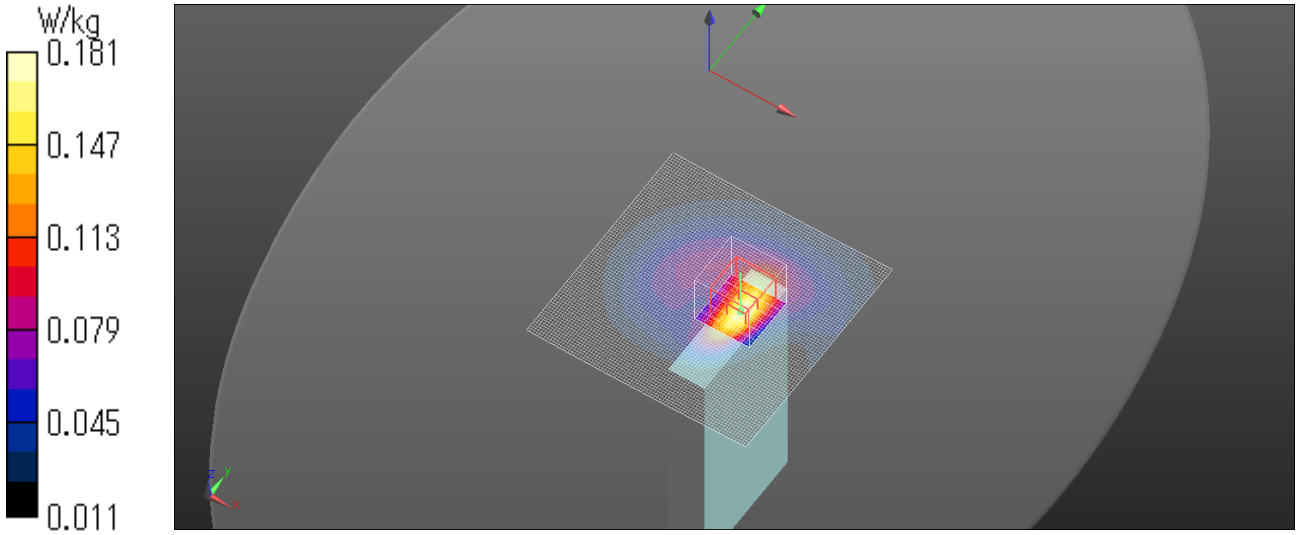

GSM850 GPRS 2slots 836.6MHz Left side 10mm
Communication System: UID 0, Generic GSM (0); Communication System Band: GSM 850 (824.0 - 849.0 MHz);
Frequency: 836.6 MHz; Duty Cycle: 1:4.19952
Medium parameters used: f = 837 MHz; σ = 0.965 S/m; ε_r = 53.891; ρ = 1000 kg/m^3
Phantom section: Flat Section
Measurement Standard: DASY5 (IEEE/IEC/ANSI C63.19-2011)
DASY5 Configuration
Probe: EX3DV4 - SN3922; ConvF(9.98, 9.98, 9.98); Calibrated: 2014/06/13;
Sensor-Surface: 2mm (Mechanical Surface Detection)
Electronics: DAE4 Sn1372; Calibrated: 2014/06/18
Phantom: ELI v5.0 TP1207 (30deg probe tilt); Type: QDOVA002AA; Serial: TP:1207
Measurement SW: DASY52, Version 52.8 (8); SEMCAD X Version 14.6.10 (7331)

Area Scan 2 (81x81x1): Interpolated grid: dx=1.500 mm, dy=1.500 mm
Maximum value of SAR (interpolated) = 0.261 W/kg

Zoom Scan (7x7x7)/Cube 0: Measurement grid: dx=5mm, dy=5mm, dz=5mm
Reference Value = 16.
85 V/m; Power Drift = -0.01 dB
Peak SAR (extrapolated) = 0.295 W/kg
SAR(1 g) = 0.215 W/kg; SAR(10 g) = 0.150 W/kg
Maximum value of SAR (measured) = 0.261 W/kg
Date: 2015/02/06
Ambient Temp. : 24.0 degree.C. Liquid Temp.; 23.5 degree.C.

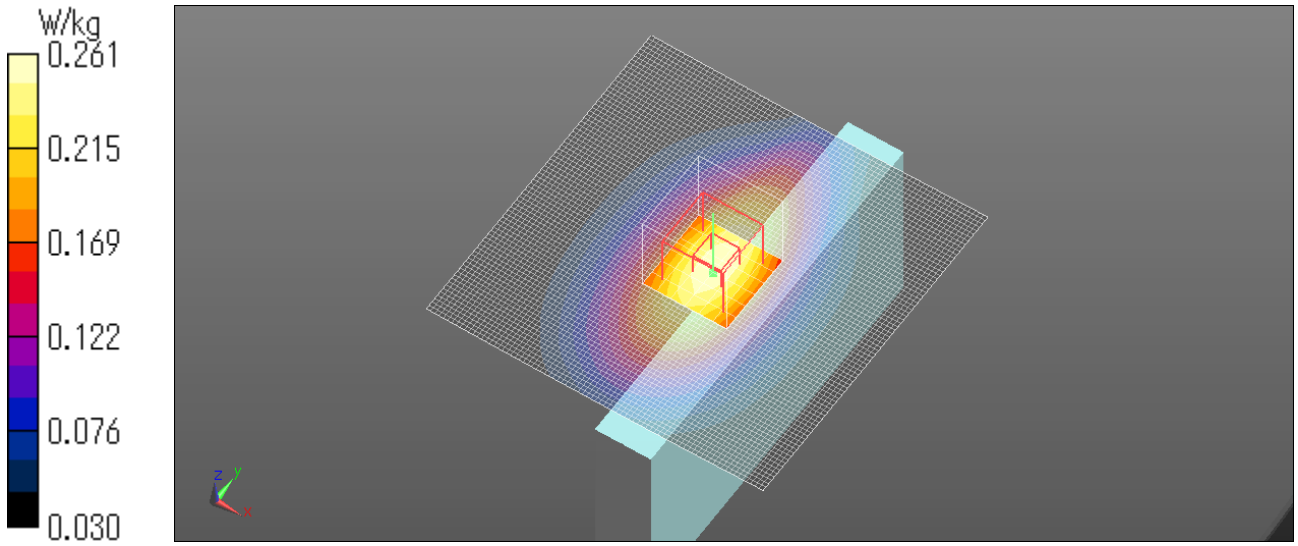

GSM850 GPRS 2slots 836.6MHz Right side 10mm
Communication System: UID 0, Generic GSM (0); Communication System Band: GSM 850 (824.0 - 849.0 MHz);
Frequency: 836.6 MHz; Duty Cycle: 1:4.19952
Medium parameters used: f = 837 MHz; σ = 0.965 S/m; ε_r = 53.891; ρ = 1000 kg/m^3
Phantom section: Flat Section
Measurement Standard: DASY5 (IEEE/IEC/ANSI C63.19-2011)
DASY5 Configuration
Probe: EX3DV4 - SN3922; ConvF(9.98, 9.98, 9.98); Calibrated: 2014/06/13;
Sensor-Surface: 2mm (Mechanical Surface Detection (Locations From Previous Scan Used)), Sensor-Surface: 2mm (Mechanical Surface Detection)
Electronics: DAE4 Sn1372; Calibrated: 2014/06/18
Phantom: ELI v5.0 TP1207 (30deg probe tilt); Type: QDOVA002AA; Serial: TP:1207
Measurement SW: DASY52, Version 52.8 (8); SEMCAD X Version 14.6.10 (7331)

Area Scan 2 (81x81x1): Interpolated grid: dx=1.500 mm, dy=1.500 mm
Maximum value of SAR (interpolated) = 0.678 W/kg

Zoom Scan (7x7x7)/Cube 0: Measurement grid: dx=5mm, dy=5mm, dz=5mm
Reference Value = 27.04 V/m; Power Drift = -0.03 dB
Peak SAR (extrapolated) = 0.757 W/kg
SAR(1 g) = 0.549 W/kg; SAR(10 g) = 0.380 W/kg
Maximum value of SAR (measured) = 0.670 W/kg
Date: 2015/02/06
Ambient Temp. : 24.0 degree.C. Liquid Temp.; 23.5 degree.C.

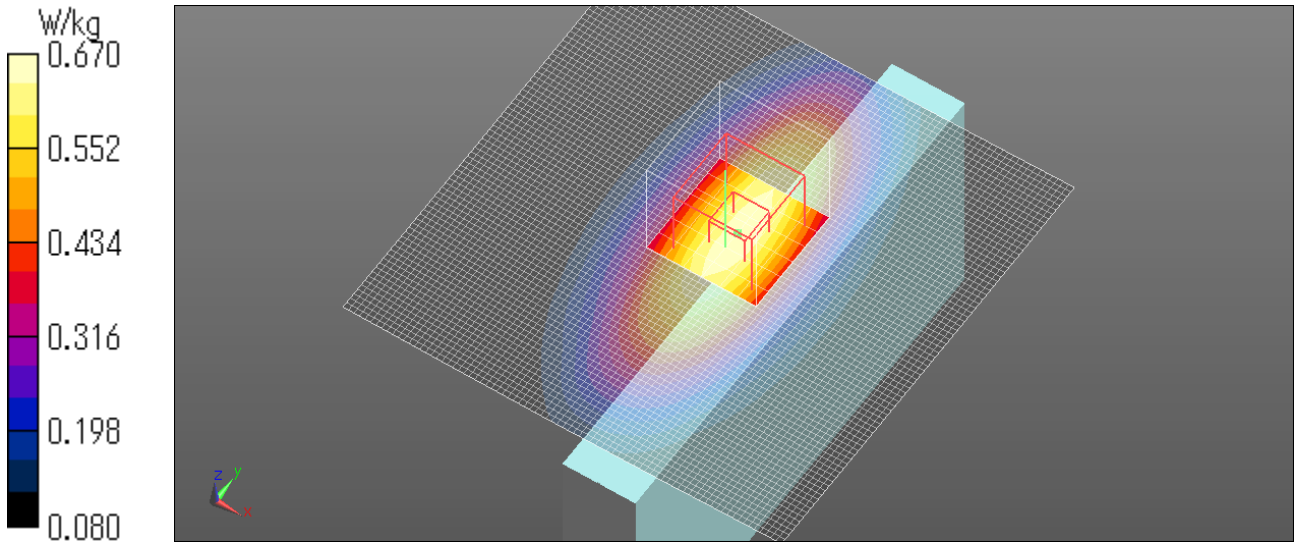

GSM850 GSM 836.6MHz Front side 10mm with accessory
Communication System: UID 0, Generic GSM (0); Communication System Band: GSM 850 (824.0 - 849.0 MHz);
Frequency: 836.6 MHz; Duty Cycle: 1:8.30042
Medium parameters used: f = 837 MHz; σ = 0.965 S/m; ε_r = 53.891; ρ = 1000 kg/m^3
Phantom section: Flat Section
Measurement Standard: DASY5 (IEEE/IEC/ANSI C63.19-2011)
DASY5 Configuration
Probe: EX3DV4 - SN3922; ConvF(9.98, 9.98, 9.98); Calibrated: 2014/06/13;
Sensor-Surface: 2mm (Mechanical Surface Detection)
Electronics: DAE4 Sn1372; Calibrated: 2014/06/18
Phantom: ELI v5.0 TP1207 (30deg probe tilt); Type: QDOVA002AA; Serial: TP:1207
Measurement SW: DASY52, Version 52.8 (8); SEMCAD X Version 14.6.10 (7331)

Area Scan 3 (71x101x1): Interpolated grid: dx=1.200 mm, dy=1.200 mm
Maximum value of SAR (interpolated) = 0.570 W/kg

Zoom Scan (7x7x7)/Cube 0: Measurement grid: dx=5mm, dy=5mm, dz=5mm
Reference Value = 24.91 V/m; Power Drift = -0.07 dB
Peak SAR (extrapolated) = 0.628 W/kg
SAR(1 g) = 0.485 W/kg; SAR(10 g) = 0.363 W/kg

Maximum value of SAR (measured) = 0.568 W/kg
Date: 2015/02/06
Ambient Temp. : 24.0 degree.C. Liquid Temp.; 23.5 degree.C.

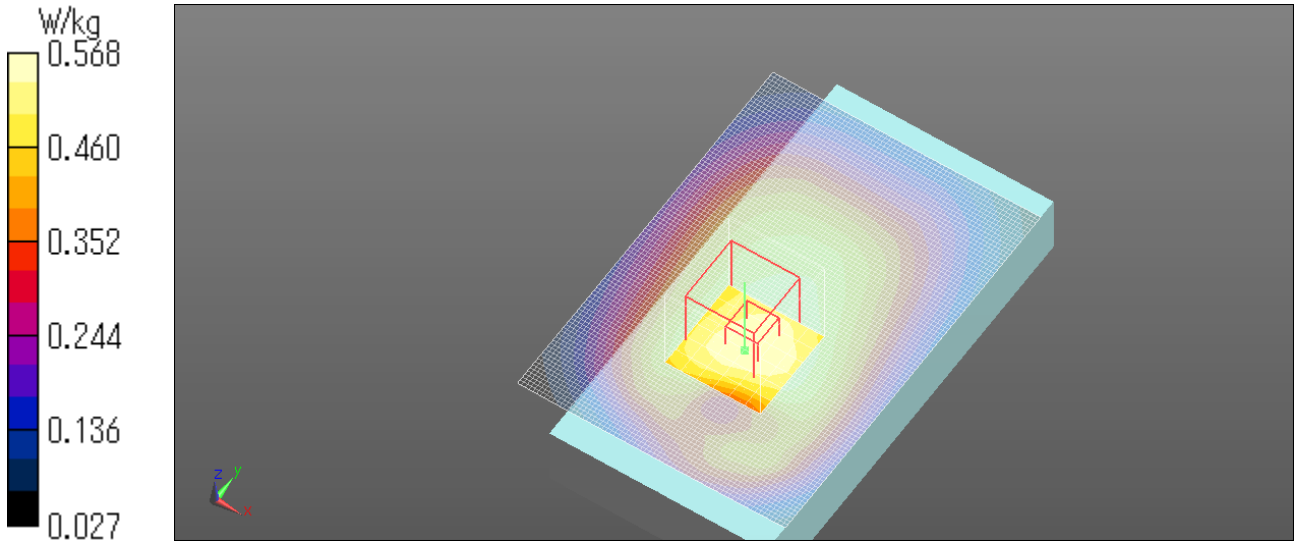

GSM850 GPRS 2slots 824.2MHz Front side 10mm
Communication System: UID 0, Generic GSM (0); Communication System Band: GSM 850 (824.0 - 849.0 MHz);
Frequency: 824.2 MHz; Duty Cycle: 1:4.19952
Medium parameters used (interpolated): f = 824.2 MHz; σ = 0.952 S/m; ε_r = 54.045; ρ = 1000 kg/m^3
Phantom section: Flat Section
Measurement Standard: DASY5 (IEEE/IEC/ANSI C63.19-2011)
DASY5 Configuration
Probe: EX3DV4 - SN3922; ConvF(9.98, 9.98, 9.98); Calibrated: 2014/06/13;
Sensor-Surface: 2mm (Mechanical Surface Detection (Locations From Previous Scan Used)), Sensor-Surface: 2mm (Mechanical Surface Detection)
Electronics: DAE4 Sn1372; Calibrated: 2014/06/18
Phantom: ELI v5.0 TP1207 (30deg probe tilt); Type: QDOVA002AA; Serial: TP:1207
Measurement SW: DASY52, Version 52.8 (8); SEMCAD X Version 14.6.10 (7331)

Area Scan 3 (71x101x1): Interpolated grid: dx=1.200 mm, dy=1.200 mm
Maximum value of SAR (interpolated) = 0.742 W/kg

Zoom Scan (7x7x7)/Cube 0: Measurement grid: dx=5mm, dy=5mm, dz=5mm
Reference Value = 28.19 V/m; Power Drift = 0.14 dB
Peak SAR (extrapolated) = 0.856 W/kg
SAR(1 g) = 0.640 W/kg; SAR(10 g) = 0.465 W/kg
Maximum value of SAR (measured) = 0.761 W/kg
Zoom Scan 2 (7x7x7)/Cube 0: Measurement grid: dx=5mm, dy=5mm, dz=5mm
Reference Value = 28.19 V/m; Power Drift = 0.14 dB
Peak SAR (extrapolated) = 0.823 W/kg
SAR(1 g) = 0.486 W/kg; SAR(10 g) = 0.301 W/kg
Maximum value of SAR (measured) = 0.656 W/kg
Zoom Scan 2 2 (7x7x7)/Cube 0: Measurement grid: dx=5mm, dy=5mm, dz=5mm
Reference Value = 28.19 V/m; Power Drift = 0.14 dB
Peak SAR (extrapolated) = 0.681 W/kg
SAR(1 g) = 0.541 W/kg; SAR(10 g) = 0.422 W/kg
Maximum value of SAR (measured) = 0.619 W/kg
Date: 2015/02/06
Ambient Temp. : 24.0 degree.C. Liquid Temp.; 23.5 degree.C.

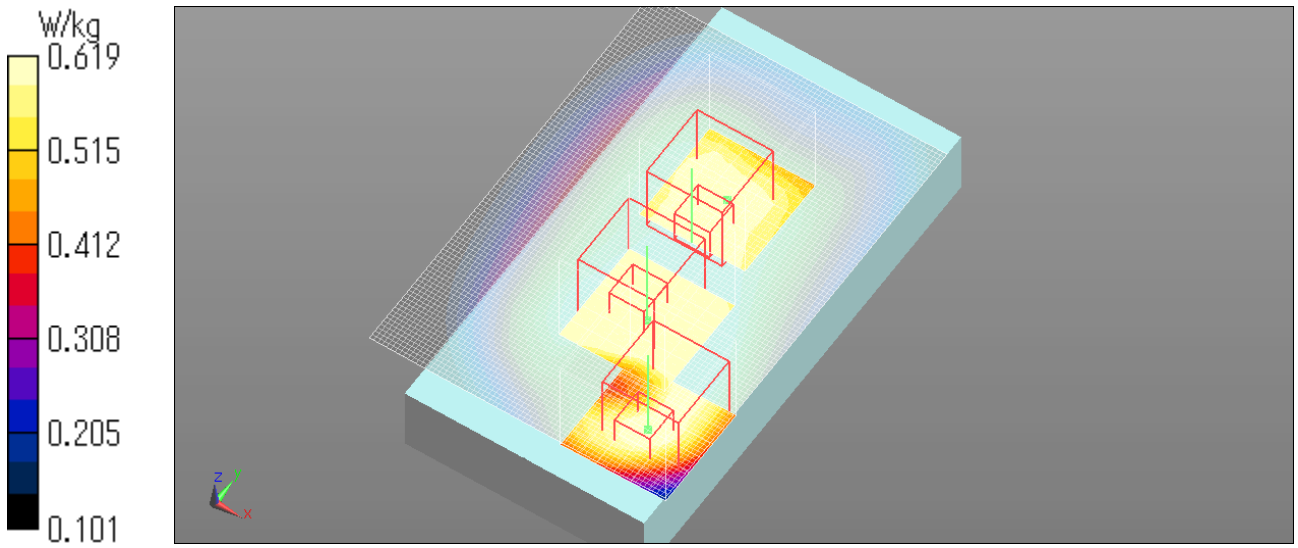

GSM850 GPRS 2slots 848.8MHz Front side 10mm
Communication System: UID 0, Generic GSM (0); Communication System Band: GSM 850 (824.0 - 849.0 MHz);
Frequency: 848.8 MHz; Duty Cycle: 1:4.19952
Medium parameters used: f = 849 MHz; σ = 0.981 S/m; ε_r = 53.783; ρ = 1000 kg/m^3
Phantom section: Flat Section
Measurement Standard: DASY5 (IEEE/IEC/ANSI C63.19-2011)
DASY5 Configuration
Probe: EX3DV4 - SN3922; ConvF(9.98, 9.98, 9.98); Calibrated: 2014/06/13;
Sensor-Surface: 2mm (Mechanical Surface Detection (Locations From Previous Scan Used)), Sensor-Surface: 2mm (Mechanical Surface Detection)
Electronics: DAE4 Sn1372; Calibrated: 2014/06/18
Phantom: ELI v5.0 TP1207 (30deg probe tilt); Type: QDOVA002AA; Serial: TP:1207
Measurement SW: DASY52, Version 52.8 (8); SEMCAD X Version 14.6.10 (7331)

Area Scan 3 (71x101x1): Interpolated grid: dx=1.200 mm, dy=1.200 mm
Maximum value of SAR (interpolated) = 0.551 W/kg

Zoom Scan (7x7x7)/Cube 0: Measurement grid: dx=5mm, dy=5mm, dz=5mm
Reference Value = 24.20 V/m; Power Drift = 0.14 dB
Peak SAR (extrapolated) = 0.635 W/kg
SAR(1 g) = 0.465 W/kg; SAR(10 g) = 0.342 W/kg

Maximum value of SAR (measured) = 0.554 W/kg

Zoom Scan 2 (7x7x7)/Cube 0: Measurement grid: dx=5mm, dy=5mm, dz=5mm
Reference Value = 24.20 V/m; Power Drift = 0.14 dB
Peak SAR (extrapolated) = 0.643 W/kg
SAR(1 g) = 0.376 W/kg; SAR(10 g) = 0.226 W/kg

Maximum value of SAR (measured) = 0.514 W/kg
Date: 2015/02/06
Ambient Temp. : 24.0 degree.C. Liquid Temp.; 23.5 degree.C.

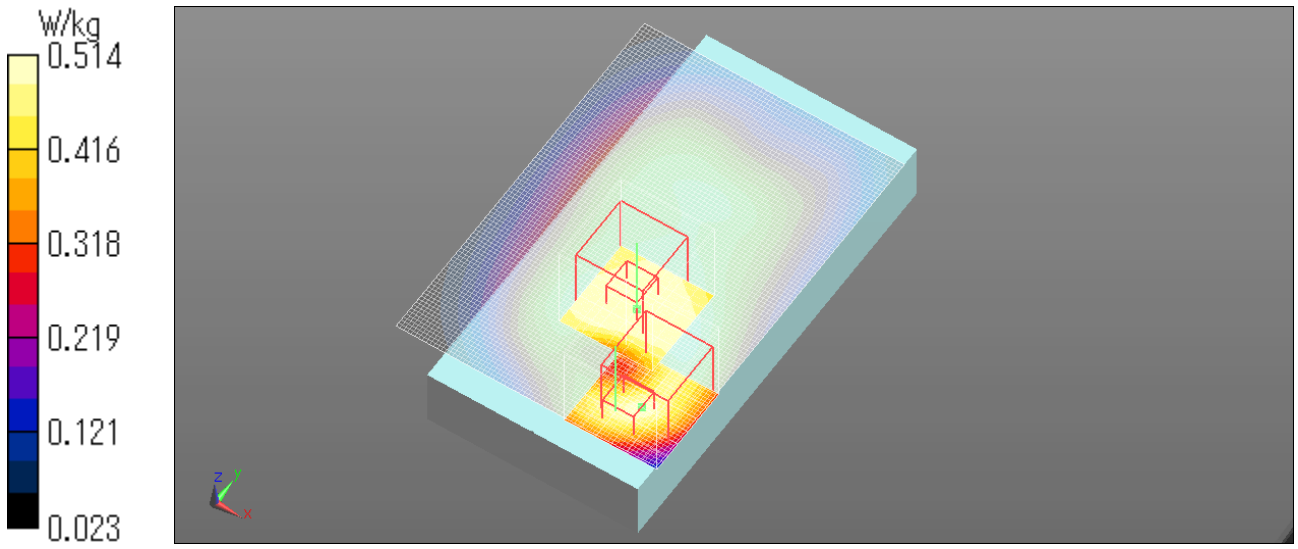

3. PCS1900 Head

GSM1900 GPRS 2slot 1880MHz Left Cheek 10mm
Communication System: UID 0, Generic GSM (0); Communication System Band: PCS 1900 (1850.0 - 1910.0 MHz);
Frequency: 1880 MHz;Duty Cycle: 1:4.19952
Medium parameters used: f = 1880 MHz; σ = 1.461 S/m; ε_r = 38.536; ρ = 1000 kg/m^3
Phantom section: Left Section
Measurement Standard: DASY5 (IEEE/IEC/ANSI C63.19-2011)
DASY Configuration:
Probe: EX3DV4 - SN3825; ConvF(7.95, 7.95, 7.95); Calibrated: 2014/12/16;
Sensor-Surface: 2mm (Mechanical Surface Detection)
Electronics: DAE4 Sn509; Calibrated: 2014/07/28
Phantom: SAM (30deg probe tilt) with CRP v4.0; Type: QD000P40CB; Serial: TP:1333
DASY52 52.8.8(1222); SEMCAD X 14.6.10(7331)

Area Scan (61x111x1): Interpolated grid: dx=1.500 mm, dy=1.500 mm
Maximum value of SAR (interpolated) = 0.440 W/kg

Zoom Scan (7x7x7)/Cube 0: Measurement grid: dx=5mm, dy=5mm, dz=5mm
Reference Value = 4.923 V/m; Power Drift = 0.19 dB
Peak SAR (extrapolated) = 0.543 W/kg
SAR(1 g) = 0.339 W/kg; SAR(10 g) = 0.198 W/kg
Maximum value of SAR (measured) = 0.446 W/kg
Date: 2015/01/21
Ambient Temp. : 24.0 degree.C. Liquid Temp.; 23.5 degree.C.

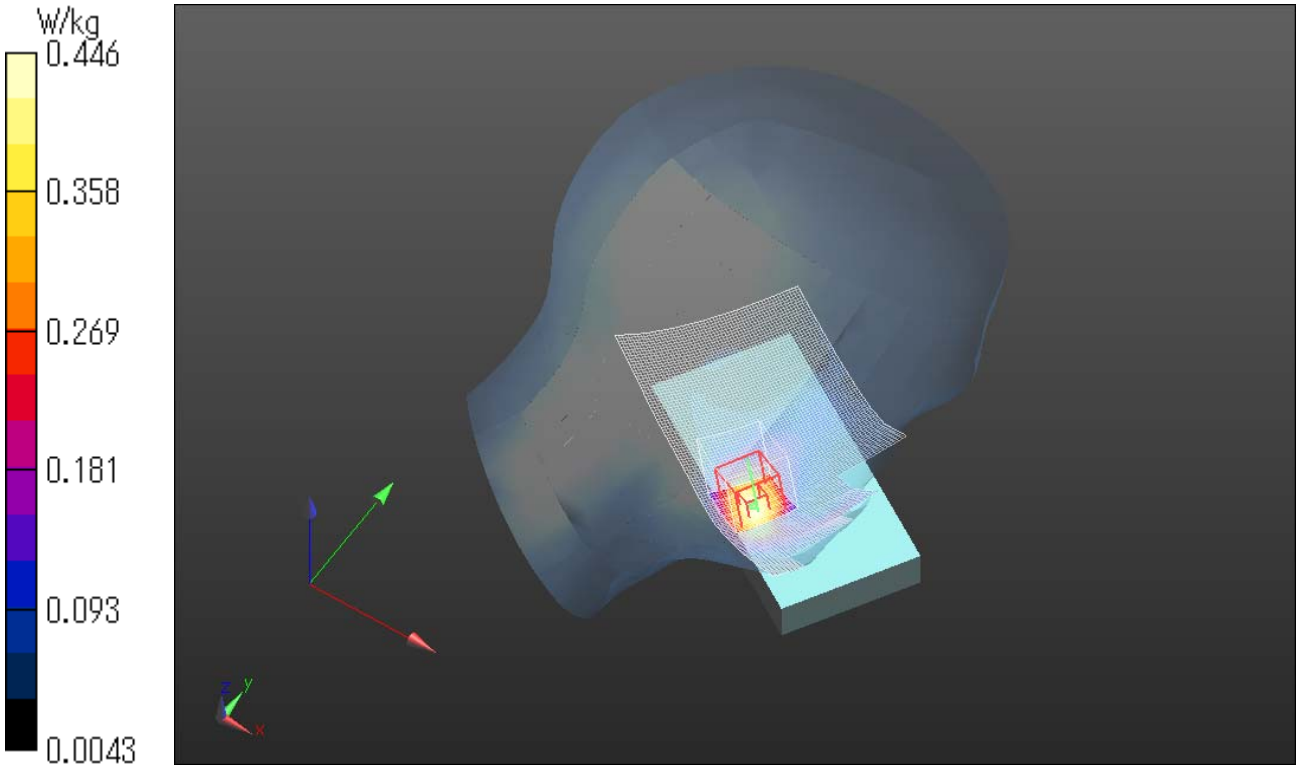

GSM1900 GPRS 2slot 1880MHz Left tilt 10mm
Communication System: UID 0, Generic GSM (0); Communication System Band: PCS 1900 (1850.0 - 1910.0 MHz);
Frequency: 1880 MHz;Duty Cycle: 1:4.19952
Medium parameters used: f = 1880 MHz; σ = 1.461 S/m; ε_r = 38.536; ρ = 1000 kg/m^3
Phantom section: Left Section
Measurement Standard: DASY5 (IEEE/IEC/ANSI C63.19-2011)
DASY Configuration:
Probe: EX3DV4 - SN3825; ConvF(7.95, 7.95, 7.95); Calibrated: 2014/12/16;
Sensor-Surface: 2mm (Mechanical Surface Detection)
Electronics: DAE4 Sn509; Calibrated: 2014/07/28
Phantom: SAM (30deg probe tilt) with CRP v4.0; Type: QD000P40CB; Serial: TP:1333
DASY52 52.8.8(1222); SEMCAD X 14.6.10(7331)

Area Scan (61x111x1): Interpolated grid: dx=1.500 mm, dy=1.500 mm
Maximum value of SAR (interpolated) = 0.0980 W/kg

Zoom Scan (7x7x7)/Cube 0: Measurement grid: dx=5mm, dy=5mm, dz=5mm
Reference Value = 6.733 V/m; Power Drift = 0.16 dB
Peak SAR (extrapolated) = 0.0920 W/kg
SAR(1 g) = 0.058 W/kg; SAR(10 g) = 0.032 W/kg
Maximum value of SAR (measured) = 0.0760 W/kg
Date: 2015/01/21
Ambient Temp. : 24.0 degree.C. Liquid Temp.; 23.5 degree.C.

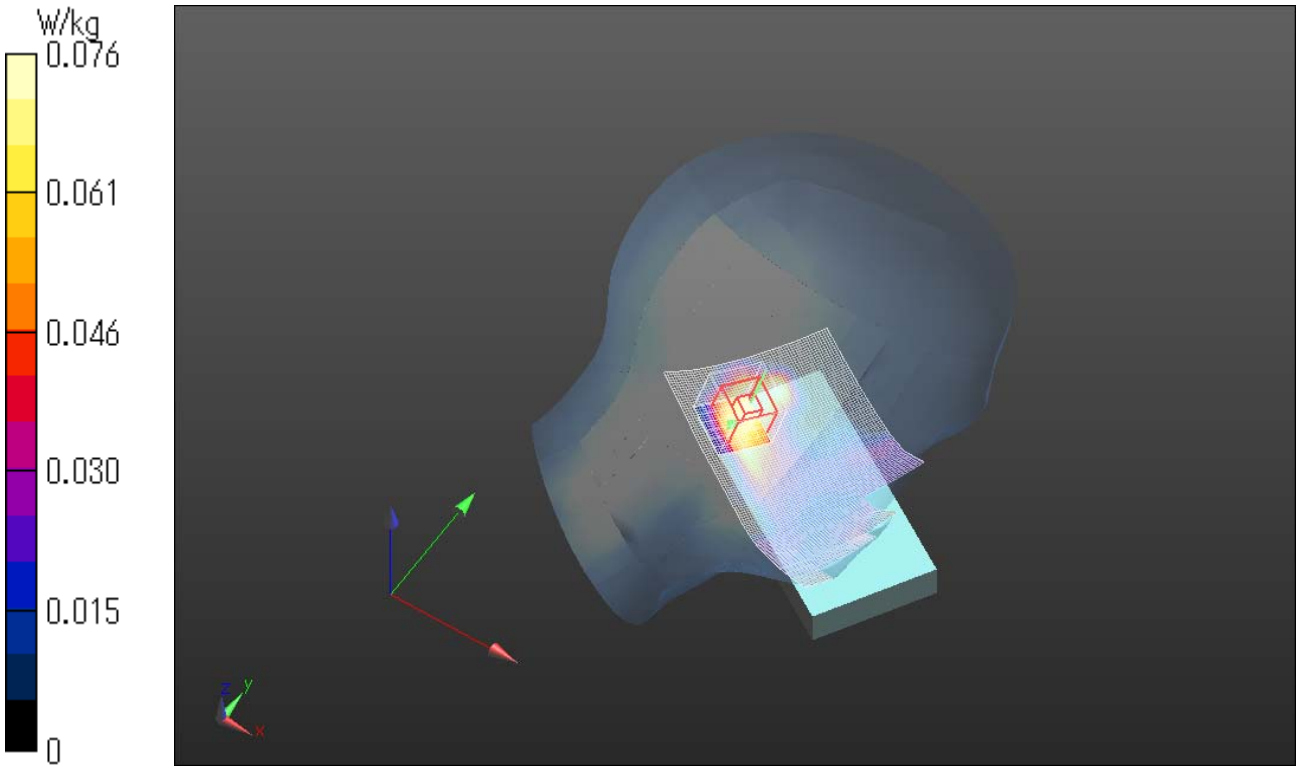

GSM1900 GPRS 2slot 1880MHz Right cheek 10mm
Communication System: UID 0, Generic GSM (0); Communication System Band: PCS 1900 (1850.0 - 1910.0 MHz);
Frequency: 1880 MHz;Duty Cycle: 1:4.19952
Medium parameters used: f = 1880 MHz; σ = 1.461 S/m; ε_r = 38.536; ρ = 1000 kg/m^3
Phantom section: Right Section
Measurement Standard: DASY5 (IEEE/IEC/ANSI C63.19-2011)
DASY Configuration:
Probe: EX3DV4 - SN3825; ConvF(7.95, 7.95, 7.95); Calibrated: 2014/12/16;
Sensor-Surface: 2mm (Mechanical Surface Detection)
Electronics: DAE4 Sn509; Calibrated: 2014/07/28
Phantom: SAM (30deg probe tilt) with CRP v4.0; Type: QD000P40CB; Serial: TP:1333
DASY52 52.8.8(1222); SEMCAD X 14.6.10(7331)

Area Scan (91x111x1): Interpolated grid: dx=1.500 mm, dy=1.500 mm
Maximum value of SAR (interpolated) = 0.182 W/kg

Zoom Scan (8x7x7)/Cube 0: Measurement grid: dx=5mm, dy=5mm, dz=5mm
Reference Value = 3.703 V/m; Power Drift = 0.16 dB
Peak SAR (extrapolated) = 0.257 W/kg
SAR(1 g) = 0.150 W/kg; SAR(10 g) = 0.079 W/kg
Maximum value of SAR (measured) = 0.209 W/kg
Date: 2015/01/21
Ambient Temp. : 24.0 degree.C. Liquid Temp.; 23.5 degree.C.

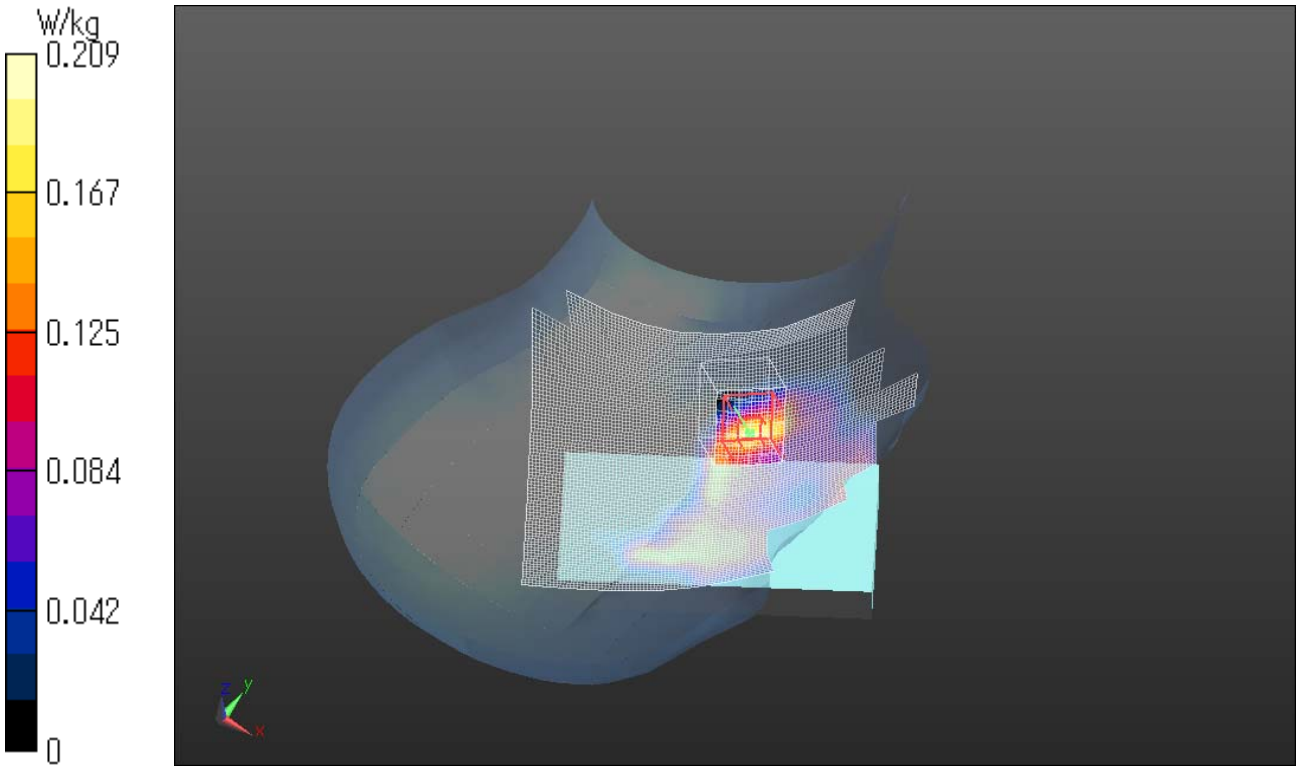

GSM1900 GPRS 2slot 1880MHz Right tilt 10mm
Communication System: UID 0, Generic GSM (0); Communication System Band: PCS 1900 (1850.0 - 1910.0 MHz);
Frequency: 1880 MHz;Duty Cycle: 1:4.19952
Medium parameters used: f = 1880 MHz; σ = 1.461 S/m; ε_r = 38.536; ρ = 1000 kg/m^3
Phantom section: Right Section
Measurement Standard: DASY5 (IEEE/IEC/ANSI C63.19-2011)
DASY Configuration:
Probe: EX3DV4 - SN3825; ConvF(7.95, 7.95, 7.95); Calibrated: 2014/12/16;
Sensor-Surface: 2mm (Mechanical Surface Detection)
Electronics: DAE4 Sn509; Calibrated: 2014/07/28
Phantom: SAM (30deg probe tilt) with CRP v4.0; Type: QD000P40CB; Serial: TP:1333
DASY52 52.8.8(1222); SEMCAD X 14.6.10(7331)

Area Scan (91x111x1): Interpolated grid: dx=1.500 mm, dy=1.500 mm
Maximum value of SAR (interpolated) = 0.0635 W/kg

Zoom Scan (8x7x7)/Cube 0: Measurement grid: dx=5mm, dy=5mm, dz=5mm
Reference Value = 5.095 V/m; Power Drift = -0.13 dB
Peak SAR (extrapolated) = 0.0750 W/kg
SAR(1 g) = 0.043 W/kg; SAR(10 g) = 0.026 W/kg
Maximum value of SAR (measured) = 0.0597 W/kg
Date: 2015/01/21
Ambient Temp. : 24.0 degree.C. Liquid Temp.; 23.5 degree.C.

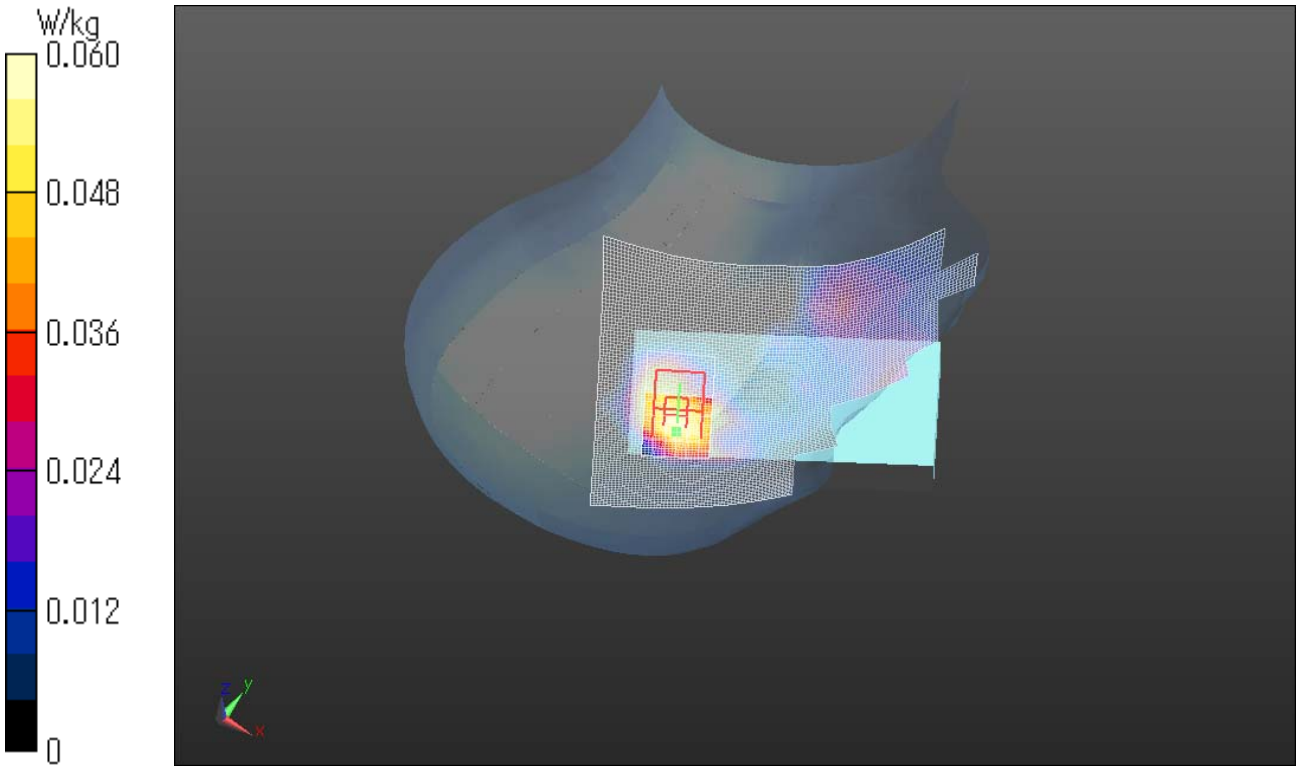

GSM1900 GSM 1880MHz Left cheek 10mm
Communication System: UID 0, Generic GSM (0); Communication System Band: PCS 1900 (1850.0 - 1910.0 MHz);
Frequency: 1880 MHz;Duty Cycle: 1:8.30042
Medium parameters used: f = 1880 MHz; σ = 1.461 S/m; ε_r = 38.536; ρ = 1000 kg/m^3
Phantom section: Left Section
Measurement Standard: DASY5 (IEEE/IEC/ANSI C63.19-2011)
DASY Configuration:
Probe: EX3DV4 - SN3825; ConvF(7.95, 7.95, 7.95); Calibrated: 2014/12/16;
Sensor-Surface: 2mm (Mechanical Surface Detection)
Electronics: DAE4 Sn509; Calibrated: 2014/07/28
Phantom: SAM (30deg probe tilt) with CRP v4.0; Type: QD000P40CB; Serial: TP:1333
DASY52 52.8.8(1222); SEMCAD X 14.6.10(7331)

Area Scan (61x111x1): Interpolated grid: dx=1.500 mm, dy=1.500 mm
Maximum value of SAR (interpolated) = 0.181 W/kg

Zoom Scan 2 (7x7x7)/Cube 0: Measurement grid: dx=5mm, dy=5mm, dz=5mm
Reference Value = 3.652 V/m; Power Drift = 0.15 dB
Peak SAR (extrapolated) = 0.239 W/kg
SAR(1 g) = 0.148 W/kg; SAR(10 g) = 0.087 W/kg
Maximum value of SAR (measured) = 0.196 W/kg
Date: 2015/01/21
Ambient Temp. : 24.0 degree.C. Liquid Temp.; 23.5 degree.C.

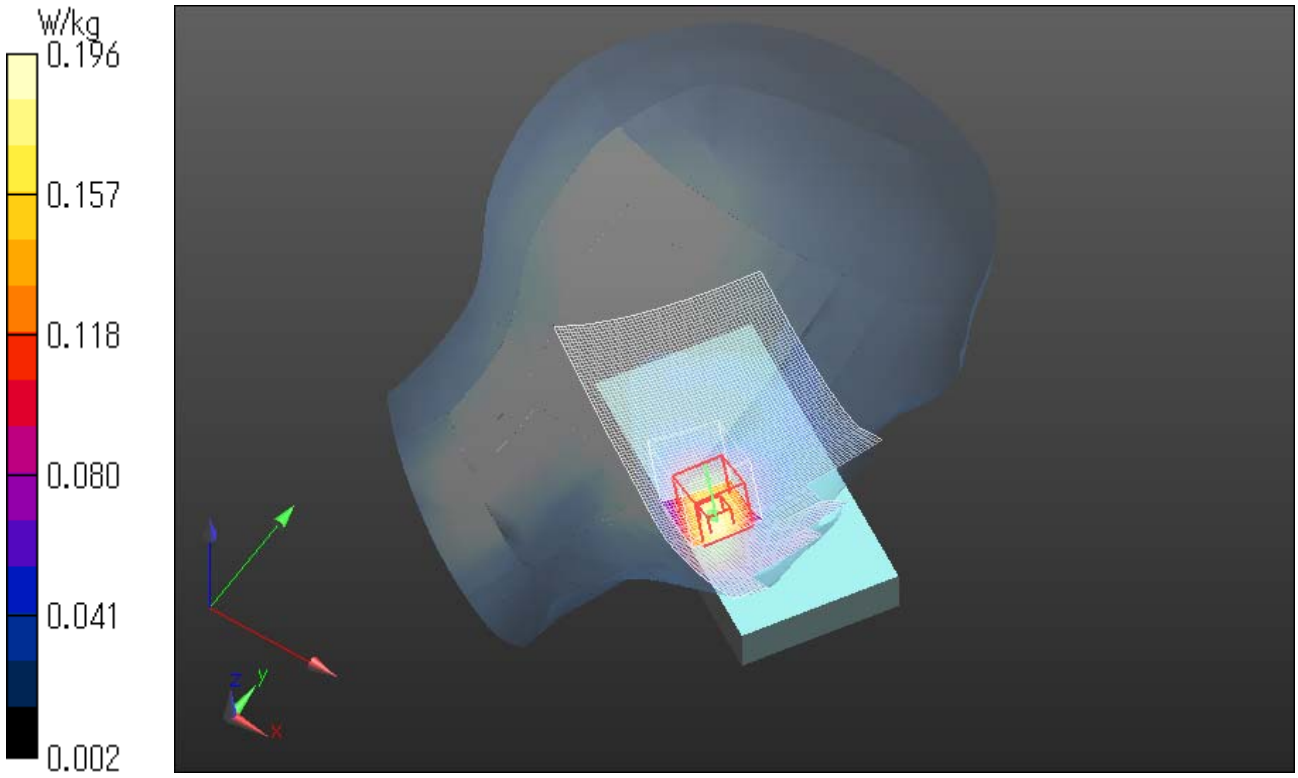

4. PCS1900 Body

GSM1900 GPRS 2slot 1880MHz Front side
Communication System: UID 0, Generic GSM (0); Communication System Band: PCS 1900 (1850.0 - 1910.0 MHz);
Frequency: 1880 MHz;Duty Cycle: 1:4.19952
Medium parameters used: f = 1880 MHz; σ = 1.574 S/m; ε_r = 51.555; ρ = 1000 kg/m^3
Phantom section: Flat Section
Measurement Standard: DASY5 (IEEE/IEC/ANSI C63.19-2011)
DASY Configuration:
Probe: EX3DV4 - SN3825; ConvF(7.62, 7.62, 7.62); Calibrated: 2014/12/16;
Sensor-Surface: 2mm (Mechanical Surface Detection)
Electronics: DAE4 Sn509; Calibrated: 2014/07/28
Phantom: ELI v4.0 (20deg probe tilt); Type: QDOVA001BB; Serial: TP:1045
DASY52 52.8.8(1222); SEMCAD X 14.6.10(7331)

Area Scan 3 (71x121x1): Interpolated grid: dx=1.200 mm, dy=1.200 mm
Maximum value of SAR (interpolated) = 0.860 W/kg

Zoom Scan (7x7x7)/Cube 0: Measurement grid: dx=5mm, dy=5mm, dz=5mm
Reference Value = 20.23 V/m; Power Drift = 0.15 dB
Peak SAR (extrapolated) = 1.06 W/kg
SAR(1 g) = 0.633 W/kg; SAR(10 g) = 0.350 W/kg
Maximum value of SAR (measured) = 0.861 W/kg
Date: 2015/01/30
Ambient Temp. : 24.0 degree.C. Liquid Temp.; 23.5 degree.C.

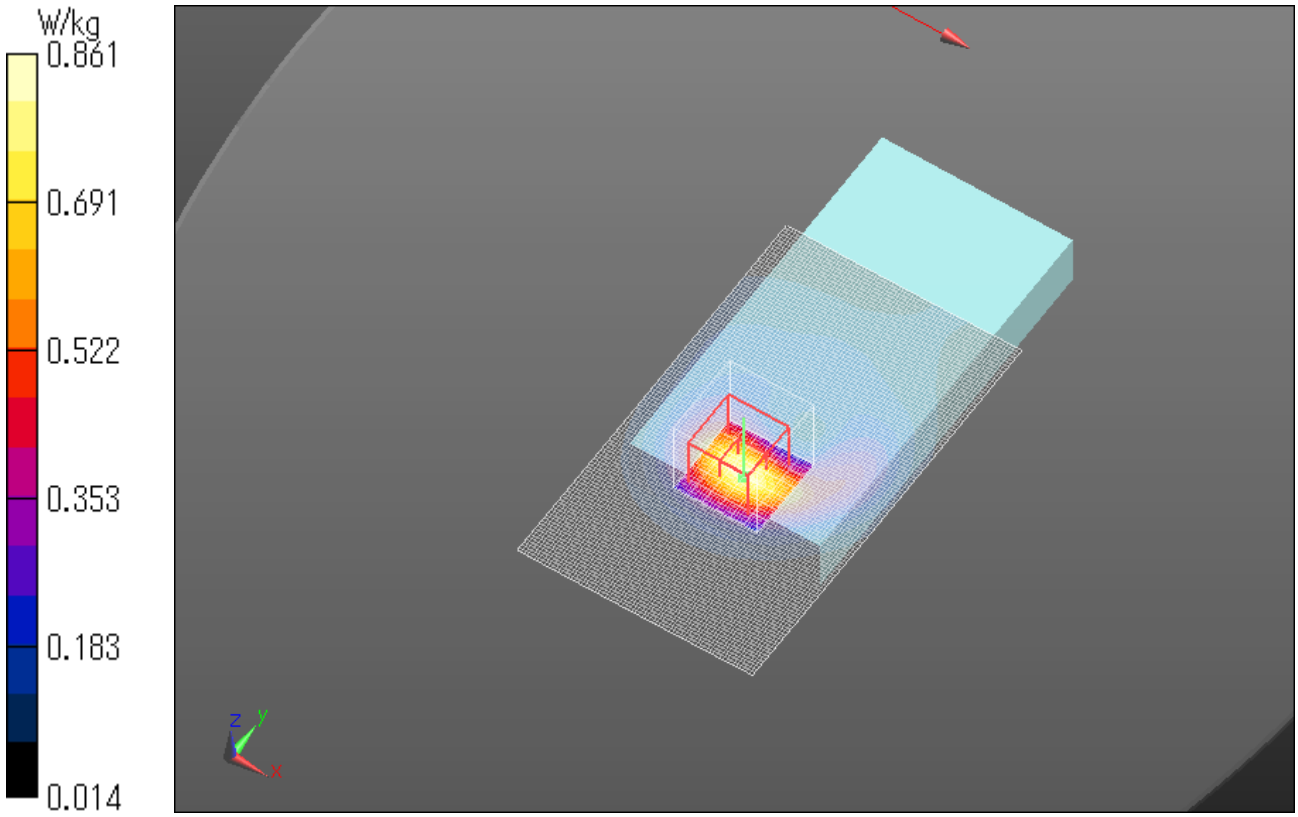

GSM1900 GPRS 2slot 1880MHz Rear side
Communication System: UID 0, Generic GSM (0); Communication System Band: PCS 1900 (1850.0 - 1910.0 MHz);
Frequency: 1880 MHz;Duty Cycle: 1:4.19952
Medium parameters used: f = 1880 MHz; σ = 1.574 S/m; ε_r = 51.555; ρ = 1000 kg/m^3
Phantom section: Flat Section
Measurement Standard: DASY5 (IEEE/IEC/ANSI C63.19-2011)
DASY Configuration:
Probe: EX3DV4 - SN3825; ConvF(7.62, 7.62, 7.62); Calibrated: 2014/12/16;
Sensor-Surface: 2mm (Mechanical Surface Detection (Locations From Previous Scan Used)), Sensor-Surface: 2mm (Mechanical Surface Detection)
Electronics: DAE4 Sn509; Calibrated: 2014/07/28
Phantom: ELI v4.0 (20deg probe tilt); Type: QDOVA001BB; Serial: TP:1045
DASY52 52.8.8(1222); SEMCAD X 14.6.10(7331)

Area Scan (71x101x1): Interpolated grid: dx=1.200 mm, dy=1.200 mm
Maximum value of SAR (interpolated) = 0.817 W/kg

Zoom Scan (7x7x7)/Cube 0: Measurement grid: dx=5mm, dy=5mm, dz=5mm
Reference Value = 22.70 V/m; Power Drift = -0.00 dB
Peak SAR (extrapolated) = 0.980 W/kg
SAR(1 g) = 0.592 W/kg; SAR(10 g) = 0.334 W/kg
Maximum value of SAR (measured) = 0.798 W/kg
Date: 2015/01/30
Ambient Temp. : 24.0 degree.C. Liquid Temp.; 23.5 degree.C.

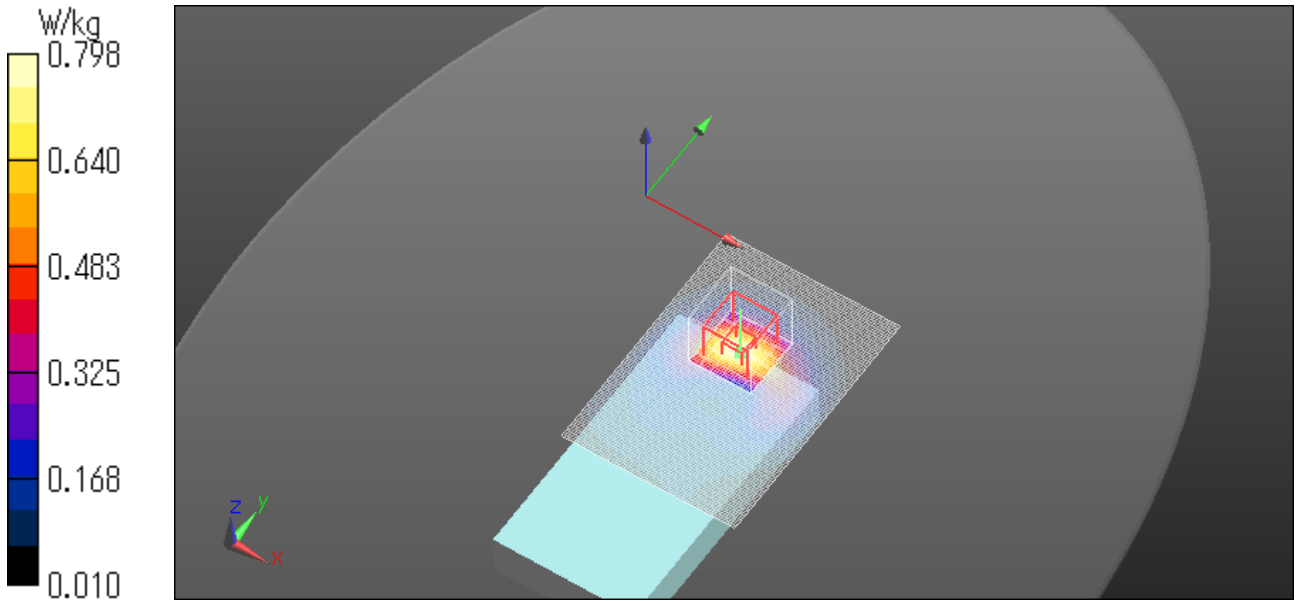

GSM1900 GPRS 2slot 1880MHz Bottom side
Communication System: UID 0, Generic GSM (0); Communication System Band: PCS 1900 (1850.0 - 1910.0 MHz);
Frequency: 1880 MHz;Duty Cycle: 1:4.19952
Medium parameters used: f = 1880 MHz; σ = 1.574 S/m; ε_r = 51.555; ρ = 1000 kg/m^3
Phantom section: Flat Section
Measurement Standard: DASY5 (IEEE/IEC/ANSI C63.19-2011)
DASY Configuration:
Probe: EX3DV4 - SN3825; ConvF(7.62, 7.62, 7.62); Calibrated: 2014/12/16;
Sensor-Surface: 2mm (Mechanical Surface Detection)
Electronics: DAE4 Sn509; Calibrated: 2014/07/28
Phantom: ELI v4.0 (20deg probe tilt); Type: QDOVA001BB; Serial: TP:1045
DASY52 52.8.8(1222); SEMCAD X 14.6.10(7331)

Area Scan (71x121x1): Interpolated grid: dx=1.200 mm, dy=1.200 mm
Maximum value of SAR (interpolated) = 1.56 W/kg

Zoom Scan (7x7x7)/Cube 0: Measurement grid: dx=5mm, dy=5mm, dz=5mm
Reference Value = 31.34 V/m; Power Drift = -0.09 dB
Peak SAR (extrapolated) = 1.88 W/kg
SAR(1 g) = 1.07 W/kg; SAR(10 g) = 0.552 W/kg
Maximum value of SAR (measured) = 1.51 W/kg
Date: 2015/01/30
Ambient Temp. : 24.0 degree.C. Liquid Temp.; 23.5 degree.C.

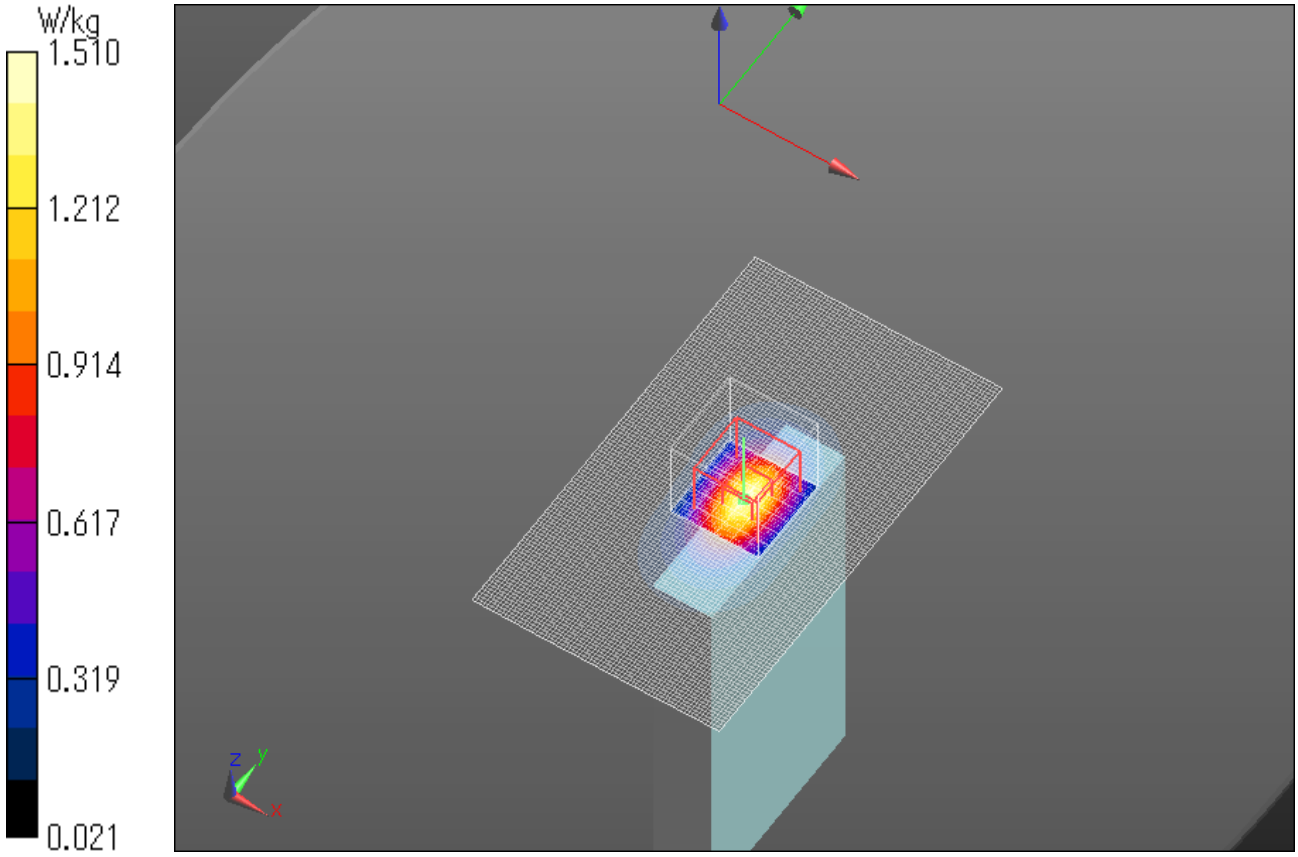

GSM1900 GPRS 2slot 1880MHz Left side
Communication System: UID 0, Generic GSM (0); Communication System Band: PCS 1900 (1850.0 - 1910.0 MHz);
Frequency: 1880 MHz;Duty Cycle: 1:4.19952
Medium parameters used: f = 1880 MHz; σ = 1.574 S/m; ε_r = 51.555; ρ = 1000 kg/m^3
Phantom section: Flat Section
Measurement Standard: DASY5 (IEEE/IEC/ANSI C63.19-2011)
DASY Configuration:
Probe: EX3DV4 - SN3825; ConvF(7.62, 7.62, 7.62); Calibrated: 2014/12/16;
Sensor-Surface: 2mm (Mechanical Surface Detection)
Electronics: DAE4 Sn509; Calibrated: 2014/07/28
Phantom: ELI v4.0 (20deg probe tilt); Type: QDOVA001BB; Serial: TP:1045
DASY52 52.8.8(1222); SEMCAD X 14.6.10(7331)

Area Scan (71x151x1): Interpolated grid: dx=1.200 mm, dy=1.200 mm
Maximum value of SAR (interpolated) = 0.184 W/kg

Zoom Scan (7x7x7)/Cube 0: Measurement grid: dx=5mm, dy=5mm, dz=5mm
Reference Value = 10.97 V/m; Power Drift = -0.11 dB
Peak SAR (extrapolated) = 0.229 W/kg
SAR(1 g) = 0.130 W/kg; SAR(10 g) = 0.069 W/kg
Maximum value of SAR (measured) = 0.183 W/kg
Date: 2015/01/30
Ambient Temp. : 24.0 degree.C. Liquid Temp.; 23.5 degree.C.

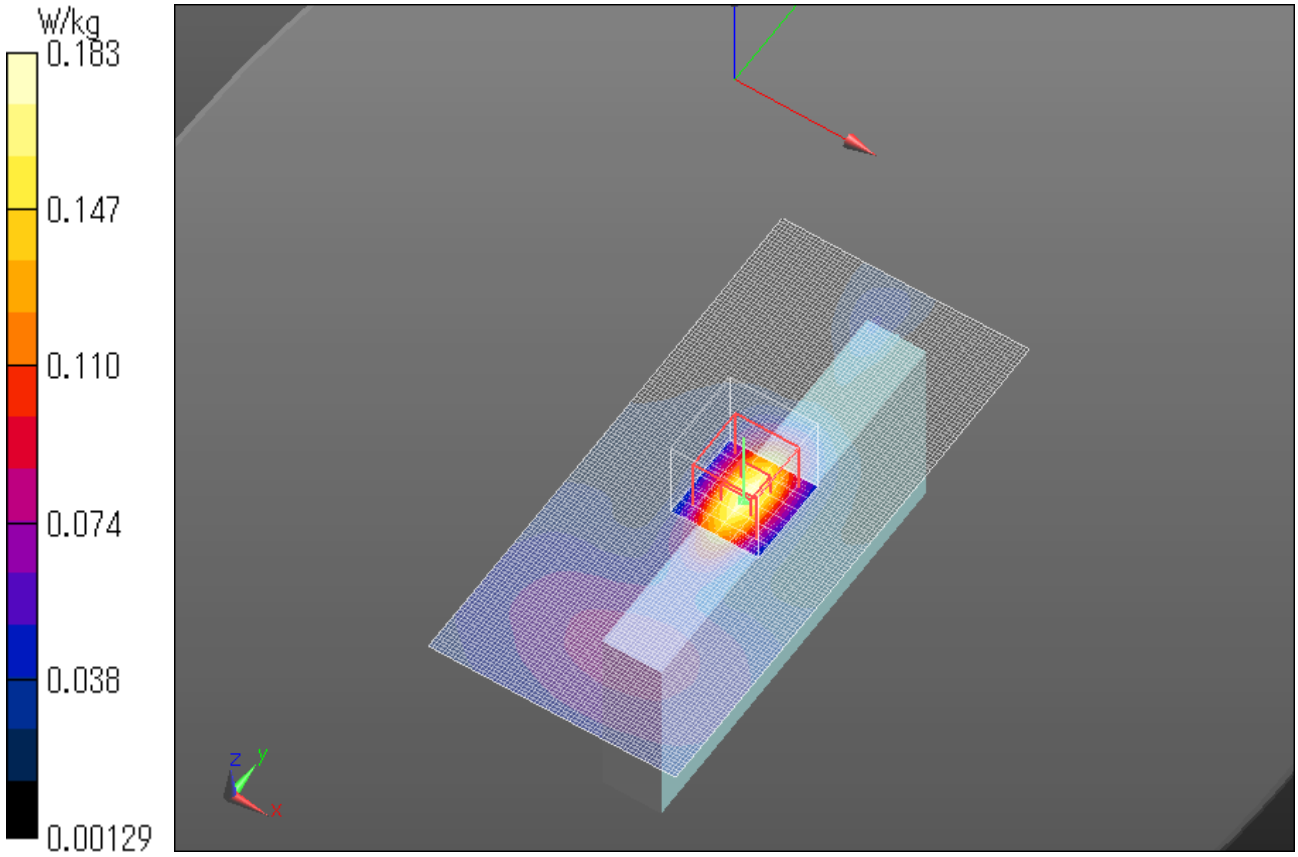

GSM1900 GPRS 2slot 1880MHz Right side
Communication System: UID 0, Generic GSM (0); Communication System Band: PCS 1900 (1850.0 - 1910.0 MHz);
Frequency: 1880 MHz;Duty Cycle: 1:4.19952
Medium parameters used: f = 1880 MHz; σ = 1.574 S/m; ε_r = 51.555; ρ = 1000 kg/m^3
Phantom section: Flat Section
Measurement Standard: DASY5 (IEEE/IEC/ANSI C63.19-2011)
DASY Configuration:
Probe: EX3DV4 - SN3825; ConvF(7.62, 7.62, 7.62); Calibrated: 2014/12/16;
Sensor-Surface: 2mm (Mechanical Surface Detection)
Electronics: DAE4 Sn509; Calibrated: 2014/07/28
Phantom: ELI v4.0 (20deg probe tilt); Type: QDOVA001BB; Serial: TP:1045
DASY52 52.8.8(1222); SEMCAD X 14.6.10(7331)

Area Scan (71x151x1): Interpolated grid: dx=1.200 mm, dy=1.200 mm
Maximum value of SAR (interpolated) = 0.442 W/kg

Zoom Scan (7x7x7)/Cube 0: Measurement grid: dx=5mm, dy=5mm, dz=5mm
Reference Value = 16.87 V/m; Power Drift = -0.07 dB
Peak SAR (extrapolated) = 0.533 W/kg
SAR(1 g) = 0.318 W/kg; SAR(10 g) = 0.175 W/kg
Maximum value of SAR (measured) = 0.435 W/kg
Date: 2015/01/30
Ambient Temp. : 24.0 degree.C. Liquid Temp.; 23.5 degree.C.

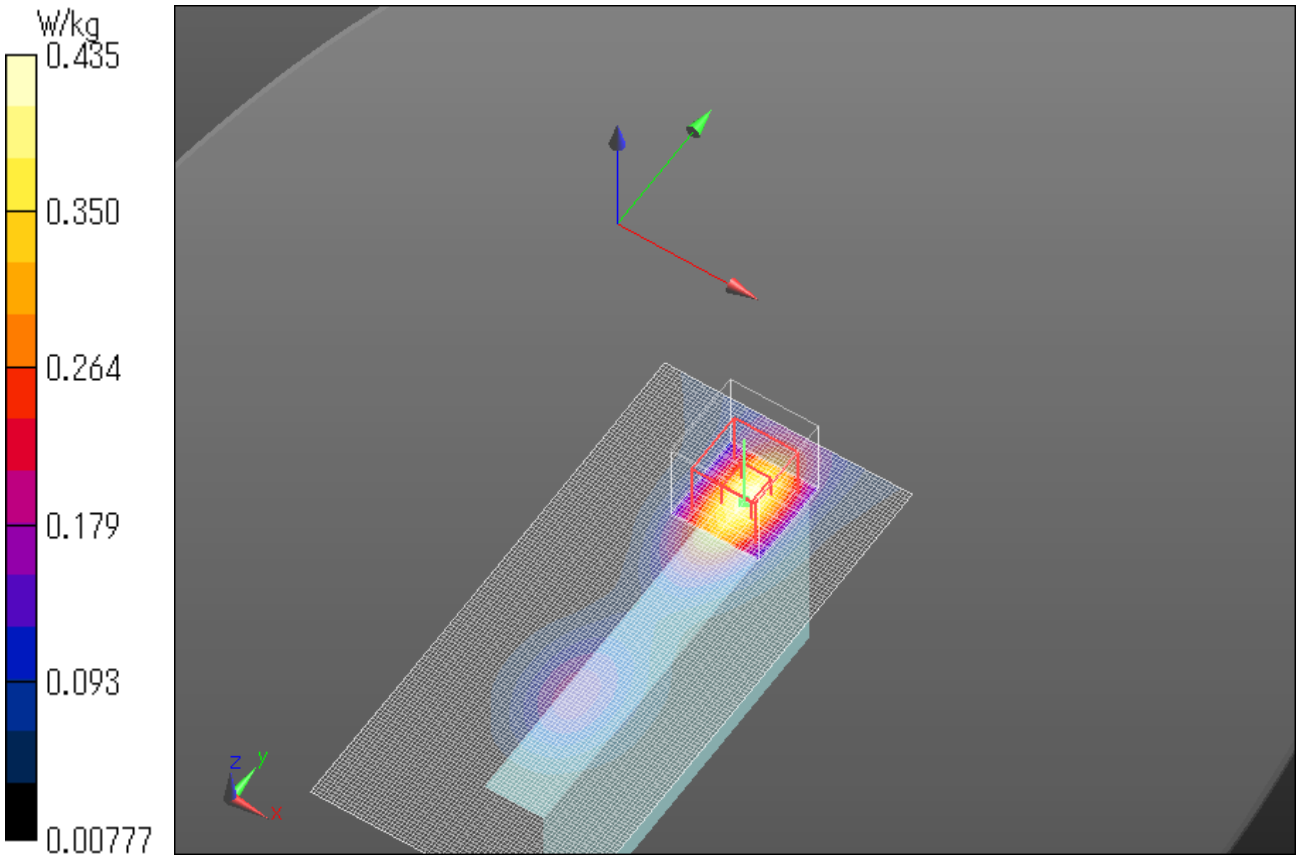

GSM1900 GSM 1880MHz Front side
Communication System: UID 0, Generic GSM (0); Communication System Band: PCS 1900 (1850.0 - 1910.0 MHz);
Frequency: 1880 MHz; Duty Cycle: 1:8.30042
Medium parameters used: f = 1880 MHz; σ = 1.574 S/m; ε_r = 51.555; ρ = 1000 kg/m^3
Phantom section: Flat Section
Measurement Standard: DASY5 (IEEE/IEC/ANSI C63.19-2011)
DASY5 Configuration
Probe: EX3DV4 - SN3825; ConvF(7.62, 7.62, 7.62); Calibrated: 2014/12/16;
Sensor-Surface: 2mm (Mechanical Surface Detection
Electronics: DAE4 Sn509; Calibrated: 2014/07/28
Phantom: ELI v4.0 (20deg probe tilt); Type: QDOVA001BB; Serial: TP:1045
Measurement SW: DASY52, Version 52.8 (8); SEMCAD X Version 14.6.10 (7331)

Area Scan 3 (71x121x1): Interpolated grid: dx=1.200 mm, dy=1.200 mm
Maximum value of SAR (interpolated) = 1.04 W/kg

Zoom Scan (7x7x7)/Cube 0: Measurement grid: dx=5mm, dy=5mm, dz=5mm
Reference Value = 26.11 V/m; Power Drift = -0.02 dB
Peak SAR (extrapolated) = 1.30 W/kg
SAR(1 g) = 0.767 W/kg; SAR(10 g) = 0.412 W/kg
Maximum value of SAR (measured) = 1.05 W/kg
Date: 2015/01/30
Ambient Temp. : 24.0 degree.C. Liquid Temp.; 23.5 degree.C.

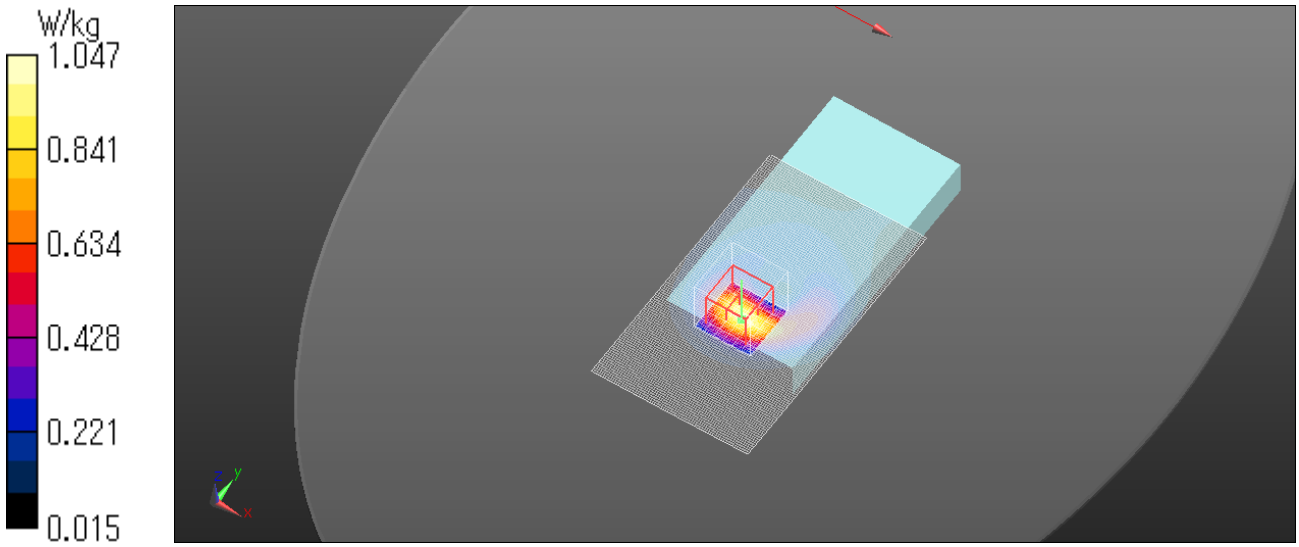

GSM1900 GPRS 2slot 1850.2MHz Front side
Communication System: UID 0, Generic GSM (0); Communication System Band: PCS 1900 (1850.0 - 1910.0 MHz);
Frequency: 1850.2 MHz;Duty Cycle: 1:4.19952
Medium parameters used (interpolated): f = 1850.2 MHz; σ = 1.543 S/m; ε_r = 51.646; ρ = 1000 kg/m^3
Phantom section: Flat Section
Measurement Standard: DASY5 (IEEE/IEC/ANSI C63.19-2011)
DASY Configuration:
Probe: EX3DV4 - SN3825; ConvF(7.62, 7.62, 7.62); Calibrated: 2014/12/16;
Sensor-Surface: 2mm (Mechanical Surface Detection)
Electronics: DAE4 Sn509; Calibrated: 2014/07/28
Phantom: ELI v4.0 (20deg probe tilt); Type: QDOVA001BB; Serial: TP:1045
DASY52 52.8.8(1222); SEMCAD X 14.6.10(7331)

Area Scan (71x121x1): Interpolated grid: dx=1.200 mm, dy=1.200 mm

Maximum value of SAR (interpolated) = 0.783 W/kg

Zoom Scan (7x7x7)/Cube 0: Measurement grid: dx=5mm, dy=5mm, dz=5mm
Reference Value = 22.75 V/m; Power Drift = 0.01 dB
Peak SAR (extrapolated) = 0.969 W/kg
SAR(1 g) = 0.585 W/kg; SAR(10 g) = 0.327 W/kg

Maximum value of SAR (measured) = 0.778 W/kg
Date: 2015/01/30
Ambient Temp. : 24.0 degree.C. Liquid Temp.; 23.5 degree.C.

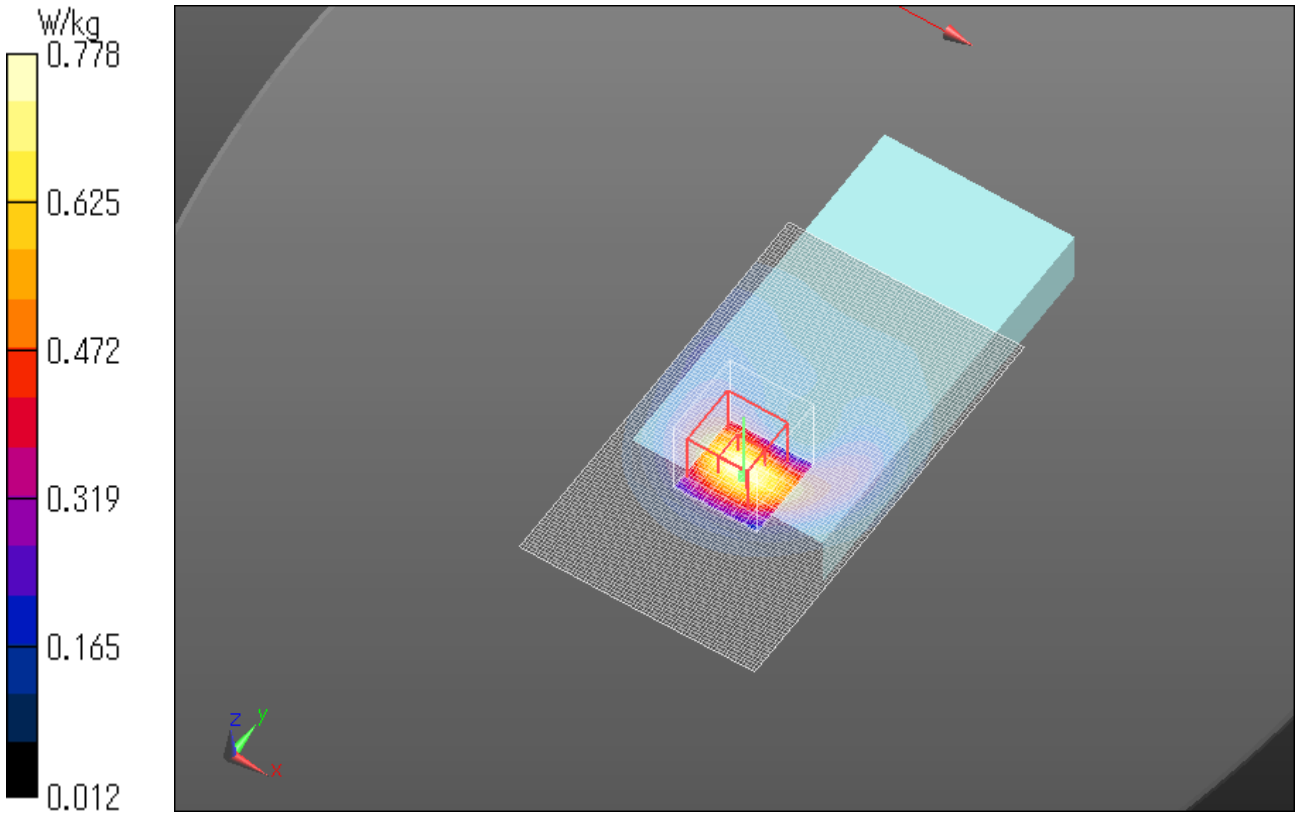

GSM1900 GPRS 2slot 1909.8MHz Front side
Communication System: UID 0, Generic GSM (0); Communication System Band: PCS 1900 (1850.0 - 1910.0 MHz);
Frequency: 1909.8 MHz; Duty Cycle: 1:4.19952
Medium parameters used: f = 1910 MHz; σ = 1.476 S/m; ε_r = 52.062; ρ = 1000 kg/m^3
Phantom section: Flat Section
Measurement Standard: DASY5 (IEEE/IEC/ANSI C63.19-2011)
DASY5 Configuration
Probe: EX3DV4 - SN3917; ConvF(7.68, 7.68, 7.68); Calibrated: 2014/05/14;
Sensor-Surface: 2mm (Mechanical Surface Detection)
Electronics: DAE4 Sn1369; Calibrated: 2014/05/14
Phantom: ELI v4.0 (20deg probe tilt); Type: QDOVA001BB; Serial: TP:1095
Measurement SW: DASY52, Version 52.8 (8); SEMCAD X Version 14.6.10 (7331)

Configuration/Unnamed procedure/Area Scan (71x121x1): Interpolated grid: dx=1.200 mm, dy=1.200 mm
Maximum value of SAR (interpolated) = 0.917 W/kg

Configuration/Unnamed procedure/Zoom Scan (7x7x7)/Cube 0: Measurement grid: dx=5mm, dy=5mm, dz=5mm
Reference Value = 25.55 V/m; Power Drift = -0.06 dB
Peak SAR (extrapolated) = 1.09 W/kg
SAR(1 g) = 0.690 W/kg; SAR(10 g) = 0.391 W/kg
Maximum value of SAR (measured) = 0.912 W/kg
Date: 2015/01/30
Ambient Temp. : 24.0 degree.C. Liquid Temp.; 23.5 degree.C.

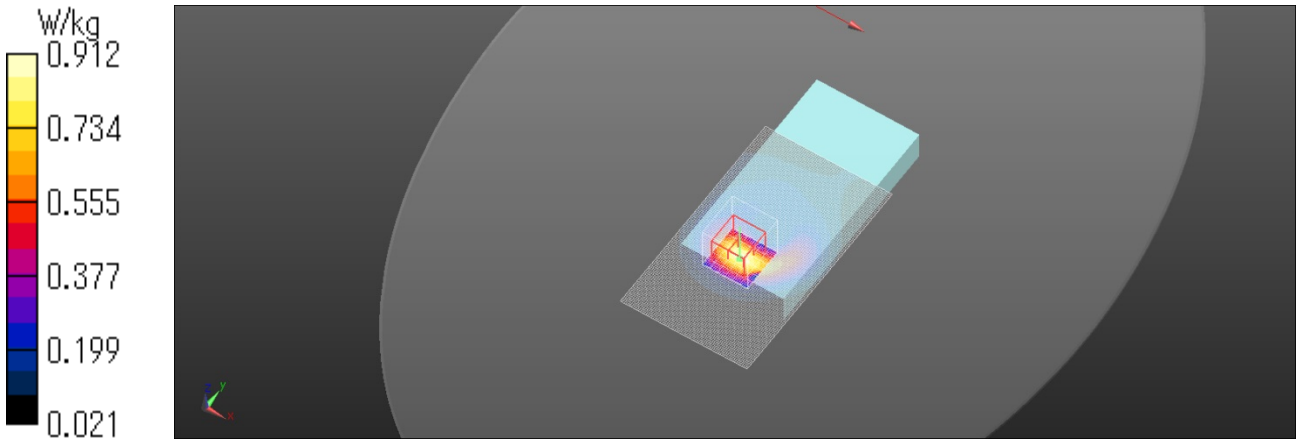

GSM1900 GPRS 2slot 1850.2MHz Bottom side
Communication System: UID 0, Generic GSM (0); Communication System Band: PCS 1900 (1850.0 - 1910.0 MHz);
Frequency: 1850.2 MHz;Duty Cycle: 1:4.19952
Medium parameters used (interpolated): f = 1850.2 MHz; σ = 1.543 S/m; ε_r = 51.646; ρ = 1000 kg/m^3
Phantom section: Flat Section
Measurement Standard: DASY5 (IEEE/IEC/ANSI C63.19-2011)
DASY Configuration:
Probe: EX3DV4 - SN3825; ConvF(7.62, 7.62, 7.62); Calibrated: 2014/12/16;
Sensor-Surface: 2mm (Mechanical Surface Detection)
Electronics: DAE4 Sn509; Calibrated: 2014/07/28
Phantom: ELI v4.0 (20deg probe tilt); Type: QDOVA001BB; Serial: TP:1045
DASY52 52.8.8(1222); SEMCAD X 14.6.10(7331)

Area Scan (71x121x1): Interpolated grid: dx=1.200 mm, dy=1.200 mm

Maximum value of SAR (interpolated) = 1.28 W/kg

Zoom Scan (7x7x7)/Cube 0: Measurement grid: dx=5mm, dy=5mm, dz=5mm
Reference Value = 28.69 V/m; Power Drift = -0.07 dB
Peak SAR (extrapolated) = 1.53 W/kg
SAR(1 g) = 0.883 W/kg; SAR(10 g) = 0.456 W/kg

Maximum value of SAR (measured) = 1.23 W/kg
Date: 2015/01/30
Ambient Temp. : 24.0 degree.C. Liquid Temp.; 23.5 degree.C.

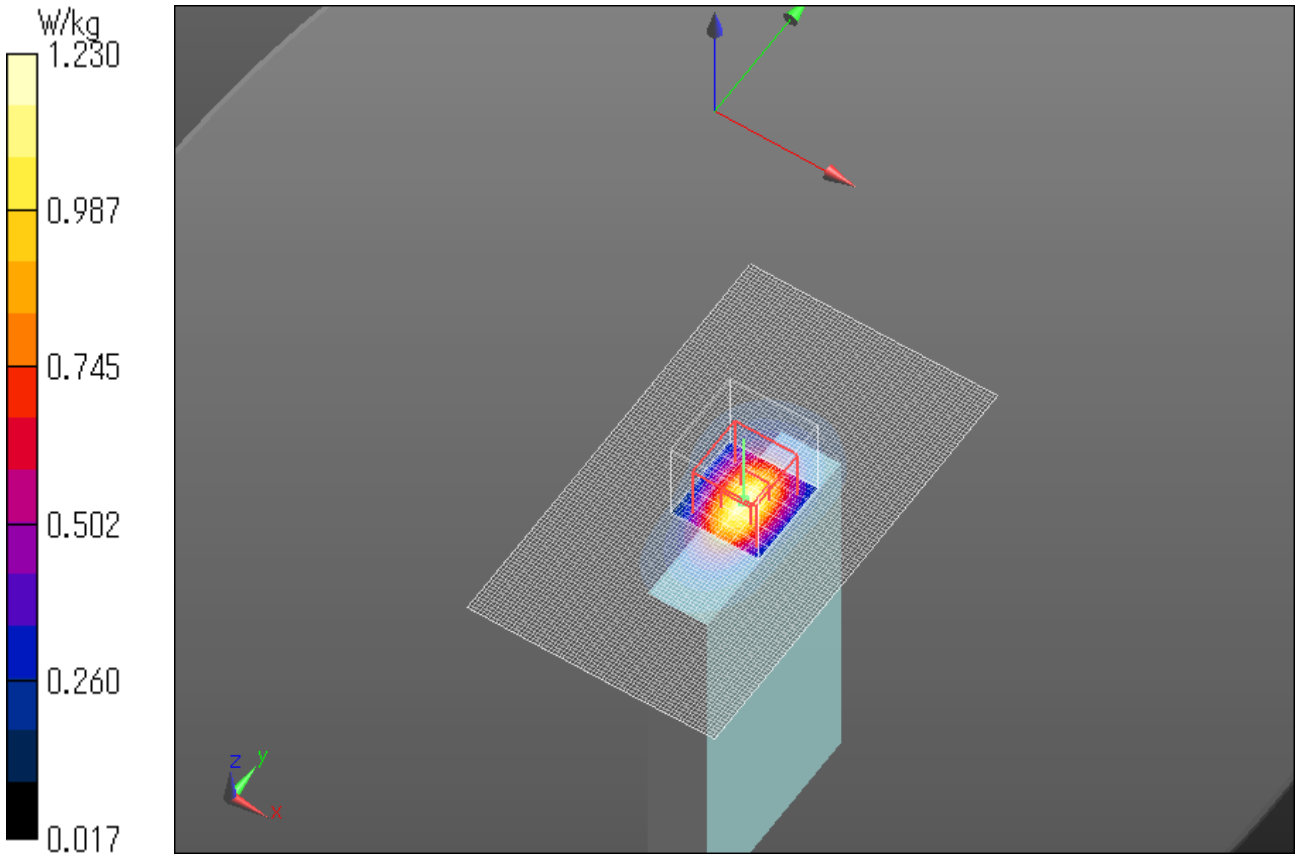

GSM1900 GPRS 2slot 1909.8MHz Bottom side
Communication System: UID 0, Generic GSM (0); Communication System Band: PCS 1900 (1850.0 - 1910.0 MHz);
Frequency: 1909.8 MHz; Duty Cycle: 1:4.19952
Medium parameters used: f = 1910 MHz; σ = 1.476 S/m; ε_r = 52.062; ρ = 1000 kg/m^3
Phantom section: Flat Section
Measurement Standard: DASY5 (IEEE/IEC/ANSI C63.19-2011)
DASY5 Configuration
Probe: EX3DV4 - SN3917; ConvF(7.68, 7.68, 7.68); Calibrated: 2014/05/14;
Sensor-Surface: 2mm (Mechanical Surface Detection)
Electronics: DAE4 Sn1369; Calibrated: 2014/05/14
Phantom: ELI v4.0 (20deg probe tilt); Type: QDOVA001BB; Serial: TP:1095
Measurement SW: DASY52, Version 52.8 (8); SEMCAD X Version 14.6.10 (7331)

Area Scan (71x121x1): Interpolated grid: dx=1.200 mm, dy=1.200 mm
Maximum value of SAR (interpolated) = 1.54 W/kg

Zoom Scan (7x7x7)/Cube 0: Measurement grid: dx=5mm, dy=5mm, dz=5mm
Reference Value = 32.31 V/m; Power Drift = -0.09 dB
Peak SAR (extrapolated) = 1.78 W/kg
SAR(1 g) = 1.07 W/kg; SAR(10 g) = 0.563 W/kg
Maximum value of SAR (measured) = 1.47 W/kg
Date: 2015/01/30
Ambient Temp. : 24.0 degree.C. Liquid Temp.; 23.5 degree.C.

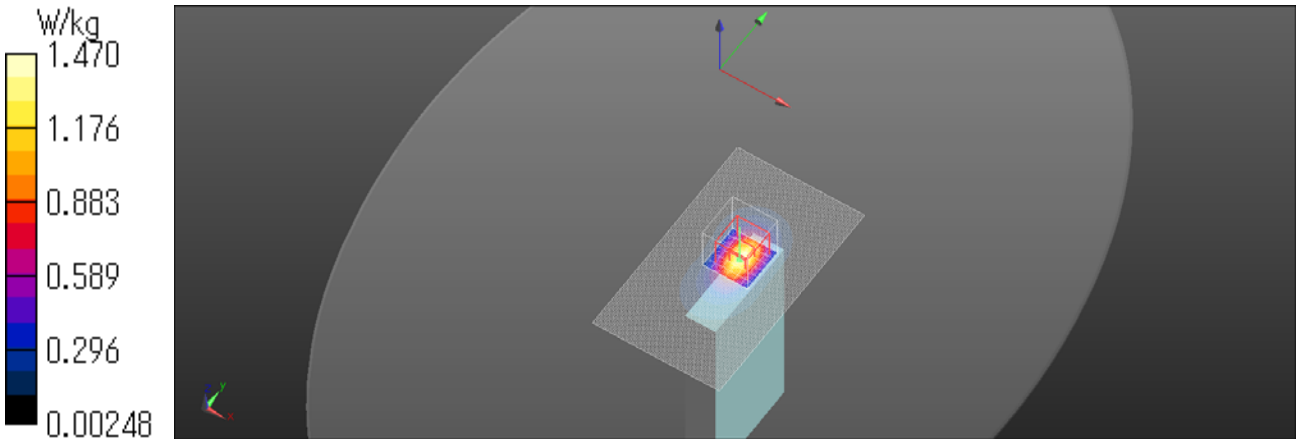

PCS1900 GSM Voice 1850.2MHz Front side 10mm
Communication System: UID 0, Generic GSM (0); Communication System Band: PCS 1900 (1850.0 - 1910.0 MHz);
Frequency: 1850.2 MHz;Duty Cycle: 1:8.30042
Medium parameters used (interpolated): f = 1850.2 MHz; σ = 1.543 S/m; ε_r = 51.646; ρ = 1000 kg/m^3
Phantom section: Flat Section
Measurement Standard: DASY5 (IEEE/IEC/ANSI C63.19-2011)
DASY Configuration:
Probe: EX3DV4 - SN3825; ConvF(7.62, 7.62, 7.62); Calibrated: 2014/12/16;
Sensor-Surface: 2mm (Mechanical Surface Detection (Locations From Previous Scan Used)), Sensor-Surface: 2mm (Mechanical Surface Detection)
Electronics: DAE4 Sn509; Calibrated: 2014/07/28
Phantom: ELI v4.0 (20deg probe tilt); Type: QDOVA001BB; Serial: TP:1045
DASY52 52.8.8(1222); SEMCAD X 14.6.10(7331)

Area Scan 3 (71x121x1): Interpolated grid: dx=1.200 mm, dy=1.200 mm
Maximum value of SAR (interpolated) = 0.890 W/kg

Zoom Scan (7x7x7)/Cube 0: Measurement grid: dx=5mm, dy=5mm, dz=5mm
Reference Value = 22.16 V/m; Power Drift = -0.05 dB
Peak SAR (extrapolated) = 1.09 W/kg
SAR(1 g) = 0.649 W/kg; SAR(10 g) = 0.353 W/kg
Maximum value of SAR (measured) = 0.884 W/kg

Date: 2015/01/30
Ambient Temp. : 24.0 degree.C. Liquid Temp.; 23.5 degree.C.

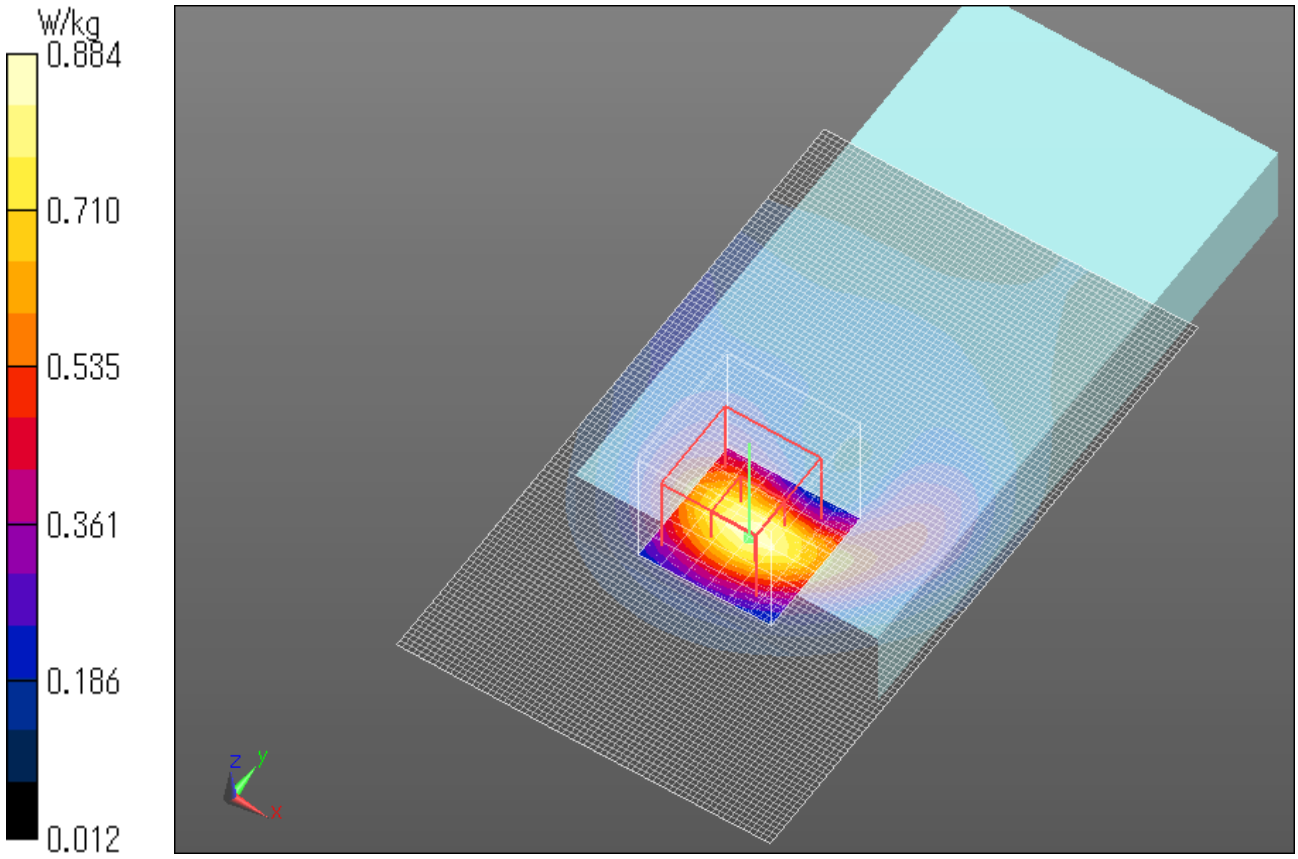

PCS1900 GSM Voice 1909.8MHz Front side 10mm
Communication System: UID 0, Generic GSM (0); Communication System Band: PCS 1900 (1850.0 - 1910.0 MHz); Frequency: 1909.8 MHz; Duty Cycle: 1:8.30042
Medium parameters used: f = 1910 MHz; σ = 1.476 S/m; ε_r = 52.062; ρ = 1000 kg/m^3
Phantom section: Flat Section
Measurement Standard: DASY5 (IEEE/IEC/ANSI C63.19-2011)
DASY5 Configuration
Probe: EX3DV4 - SN3917; ConvF(7.68, 7.68, 7.68); Calibrated: 2014/05/14;
Sensor-Surface: 2mm (Mechanical Surface Detection (Locations From Previous Scan Used)), Sensor-Surface: 2mm (Mechanical Surface Detection)
Electronics: DAE4 Sn1369; Calibrated: 2014/05/14
Phantom: ELI v4.0 (20deg probe tilt); Type: QDOVA001BB; Serial: TP:1095
Measurement SW: DASY52, Version 52.8 (8); SEMCAD X Version 14.6.10 (7331)

Area Scan (71x121x1): Interpolated grid: dx=1.200 mm, dy=1.200 mm
Maximum value of SAR (interpolated) = 0.697 W/kg

Zoom Scan (7x7x7)/Cube 0: Measurement grid: dx=5mm, dy=5mm, dz=5mm
Reference Value = 22.24 V/m; Power Drift = 0.04 dB
Peak SAR (extrapolated) = 0.833 W/kg
SAR(1 g) = 0.530 W/kg; SAR(10 g) = 0.302 W/kg
Maximum value of SAR (measured) = 0.700 W/kg

Date: 2015/01/30
Ambient Temp. : 24.0 degree.C. Liquid Temp.; 23.5 degree.C.

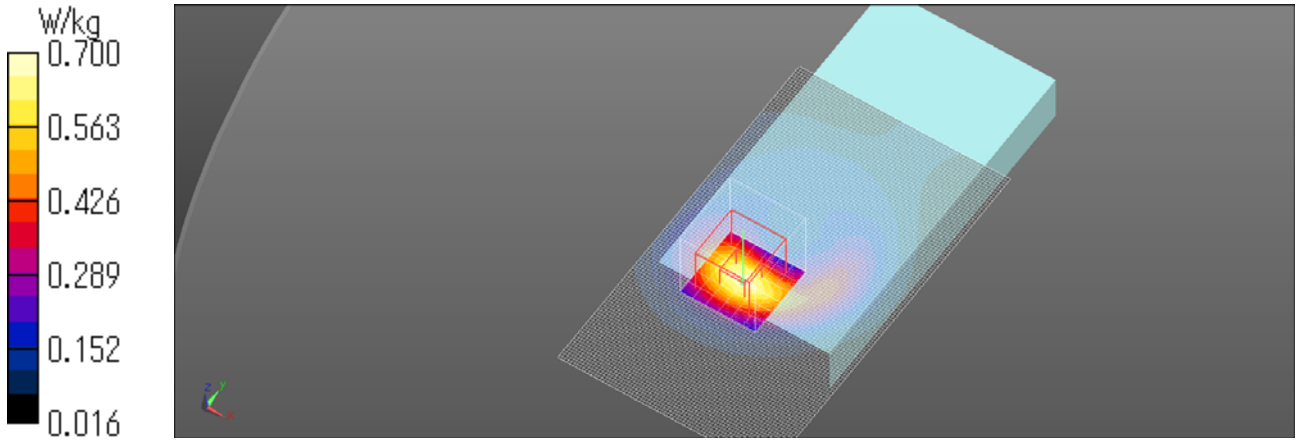

GSM1900 GPRS 2slot 1909.8MHz Bottom side with accessory
Communication System: UID 0, Generic GSM (0); Communication System Band: PCS 1900 (1850.0 - 1910.0 MHz);
Frequency: 1909.8 MHz; Duty Cycle: 1:4.19952
Medium parameters used: f = 1910 MHz; σ = 1.476 S/m; ε_r = 52.062; ρ = 1000 kg/m^3
Phantom section: Flat Section
Measurement Standard: DASY5 (IEEE/IEC/ANSI C63.19-2011)
DASY5 Configuration
Probe: EX3DV4 - SN3917; ConvF(7.68, 7.68, 7.68); Calibrated: 2014/05/14;
Sensor-Surface: 2mm (Mechanical Surface Detection (Locations From Previous Scan Used)), Sensor-Surface: 2mm (Mechanical Surface Detection)
Electronics: DAE4 Sn1369; Calibrated: 2014/05/14
Phantom: ELI v4.0 (20deg probe tilt); Type: QDOVA001BB; Serial: TP:1095
Measurement SW: DASY52, Version 52.8 (8); SEMCAD X Version 14.6.10 (7331)

Area Scan (71x121x1): Interpolated grid: dx=1.200 mm, dy=1.200 mm
Maximum value of SAR (interpolated) = 1.45 W/kg

Zoom Scan (7x7x7)/Cube 0: Measurement grid: dx=5mm, dy=5mm, dz=5mm
Reference Value = 31.93 V/m; Power Drift = -0.11 dB
Peak SAR (extrapolated) = 1.67 W/kg
SAR(1 g) = 1.01 W/kg; SAR(10 g) = 0.529 W/kg
Maximum value of SAR (measured) = 1.39 W/kg
Date: 2015/01/30
Ambient Temp. : 24.0 degree.C. Liquid Temp.; 23.5 degree.C.

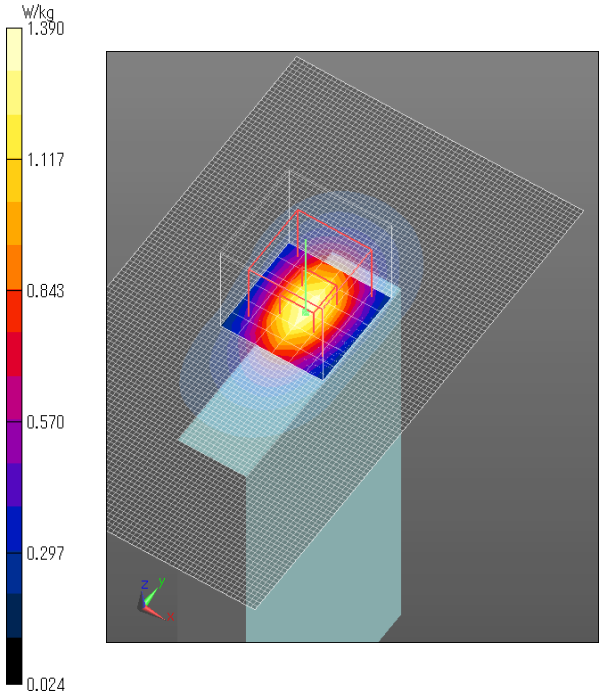

5. WCDMA Band II Head

WCDMA II RMC 12.2kbps 1880.0MHz Left Cheek
Communication System: UID 0, WCDMA (0); Communication System Band: Band II; Frequency: 1880 MHz;Duty Cycle: 1:1
Medium parameters used: f = 1880 MHz; σ = 1.42 S/m; ε_r = 39.366; ρ = 1000 kg/m^3
Phantom section: Left Section
Measurement Standard: DASY5 (IEEE/IEC/ANSI C63.19-2011)
DASY Configuration:
Probe: EX3DV4 - SN3825; ConvF(7.95, 7.95, 7.95); Calibrated: 2014/12/16;
Sensor-Surface: 2mm (Mechanical Surface Detection)
Electronics: DAE4 Sn509; Calibrated: 2014/07/28
Phantom: SAM (30deg probe tilt) with CRP v4.0; Type: QD000P40CB; Serial: TP:1333
DASY52 52.8.8(1222); SEMCAD X 14.6.10(7331)

Area Scan (61x111x1): Interpolated grid: dx=1.500 mm, dy=1.500 mm
Maximum value of SAR (interpolated) = 0.345 W/kg

Zoom Scan (7x7x7)/Cube 0: Measurement grid: dx=5mm, dy=5mm, dz=5mm
Reference Value = 5.129 V/m; Power Drift = 0.18 dB
Peak SAR (extrapolated) = 0.427 W/kg
SAR(1 g) = 0.270 W/kg; SAR(10 g) = 0.162 W/kg
Maximum value of SAR (measured) = 0.356 W/kg
Date: 2015/01/23
Ambient Temp. : 24.0 degree.C. Liquid Temp.; 23.5 degree.C.

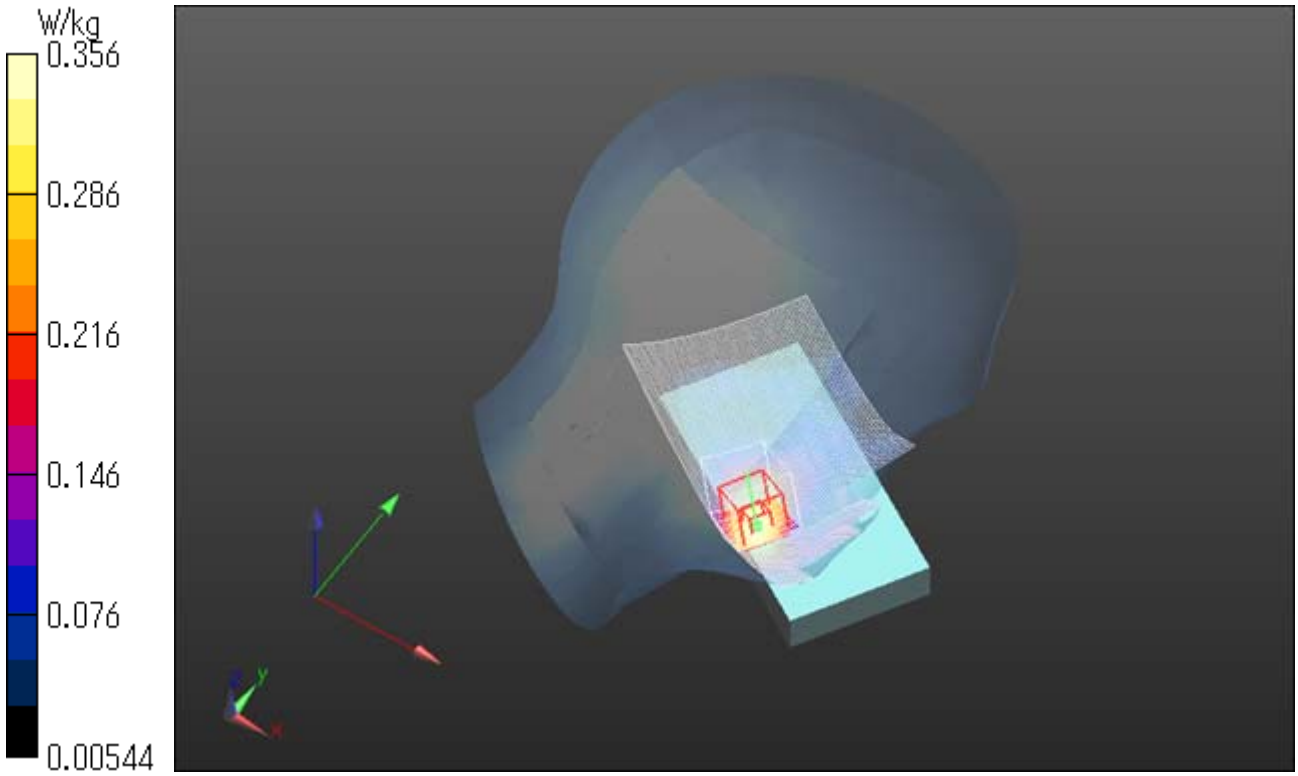

WCDMA II RMC 12.2kbps 1880.0MHz Left tilt
Communication System: UID 0, WCDMA (0); Communication System Band: Band II; Frequency: 1880 MHz;Duty Cycle: 1:1
Medium parameters used: f = 1880 MHz; σ = 1.42 S/m; ε_r = 39.366; ρ = 1000 kg/m^3
Phantom section: Left Section
Measurement Standard: DASY5 (IEEE/IEC/ANSI C63.19-2011)
DASY Configuration:
Probe: EX3DV4 - SN3825; ConvF(7.95, 7.95, 7.95); Calibrated: 2014/12/16;
Sensor-Surface: 2mm (Mechanical Surface Detection)
Electronics: DAE4 Sn509; Calibrated: 2014/07/28
Phantom: SAM (30deg probe tilt) with CRP v4.0; Type: QD000P40CB; Serial: TP:1333
DASY52 52.8.8(1222); SEMCAD X 14.6.10(7331)

Area Scan (71x111x1): Interpolated grid: dx=1.500 mm, dy=1.500 mm
Maximum value of SAR (interpolated) = 0.0997 W/kg

Zoom Scan (7x7x7)/Cube 0: Measurement grid: dx=5mm, dy=5mm, dz=5mm
Reference Value = 6.491 V/m; Power Drift = 0.00 dB
Peak SAR (extrapolated) = 0.116 W/kg
SAR(1 g) = 0.074 W/kg; SAR(10 g) = 0.044 W/kg
Maximum value of SAR (measured) = 0.0956 W/kg
Date: 2015/01/23
Ambient Temp. : 24.0 degree.C. Liquid Temp.; 23.5 degree.C.

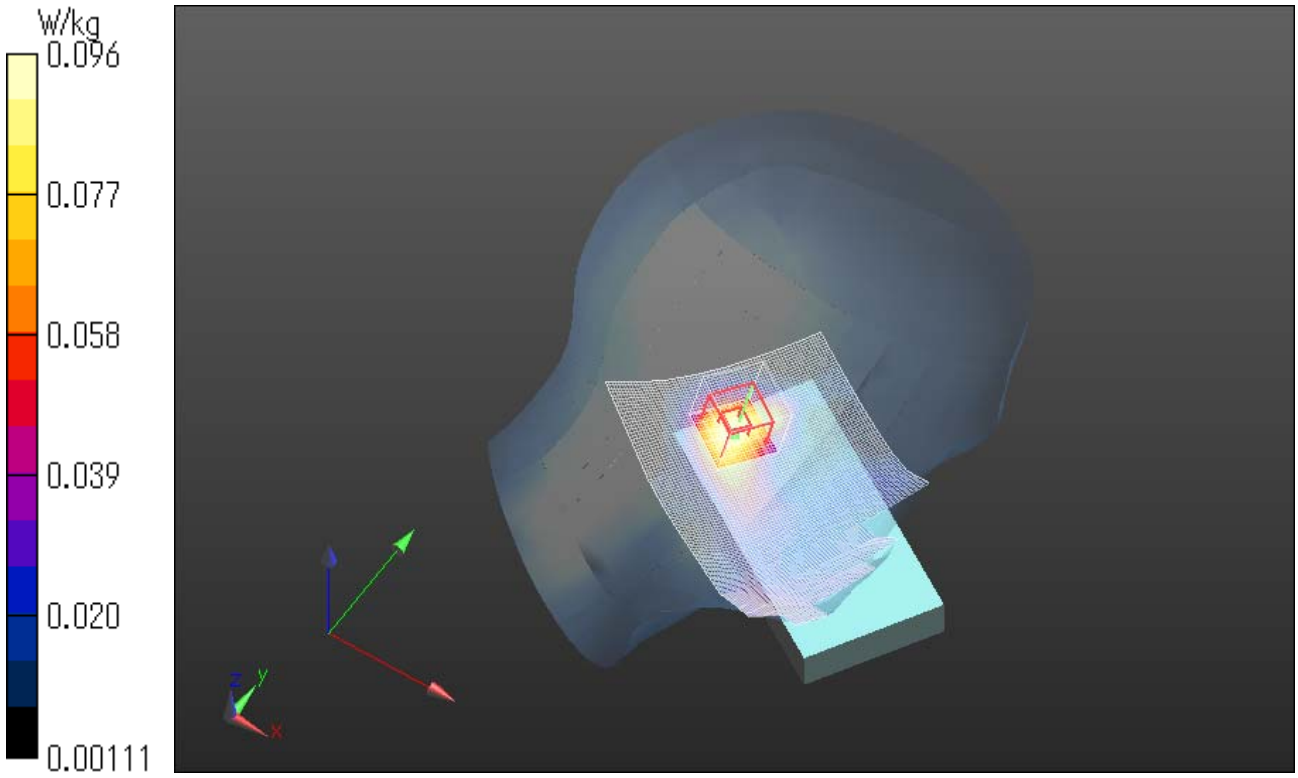

WCDMA II RMC 12.2kbps 1880.0MHz Right cheek
Communication System: UID 0, WCDMA (0); Communication System Band: Band II; Frequency: 1880 MHz;Duty Cycle: 1:1
Medium parameters used: f = 1880 MHz; σ = 1.42 S/m; ε_r = 39.366; ρ = 1000 kg/m^3
Phantom section: Right Section
Measurement Standard: DASY5 (IEEE/IEC/ANSI C63.19-2011)
DASY Configuration:
Probe: EX3DV4 - SN3825; ConvF(7.95, 7.95, 7.95); Calibrated: 2014/12/16;
Sensor-Surface: 2mm (Mechanical Surface Detection)
Electronics: DAE4 Sn509; Calibrated: 2014/07/28
Phantom: SAM (30deg probe tilt) with CRP v4.0; Type: QD000P40CB; Serial: TP:1333
DASY52 52.8.8(1222); SEMCAD X 14.6.10(7331)

Area Scan (91x111x1): Interpolated grid: dx=1.500 mm, dy=1.500 mm
Maximum value of SAR (interpolated) = 0.224 W/kg

Zoom Scan (9x8x7)/Cube 0: Measurement grid: dx=5mm, dy=5mm, dz=5mm
Reference Value = 4.208 V/m; Power Drift = 0.16 dB
Peak SAR (extrapolated) = 0.288 W/kg
SAR(1 g) = 0.163 W/kg; SAR(10 g) = 0.088 W/kg
Maximum value of SAR (measured) = 0.227 W/kg
Date: 2015/01/23
Ambient Temp. : 24.0 degree.C. Liquid Temp.; 23.5 degree.C.

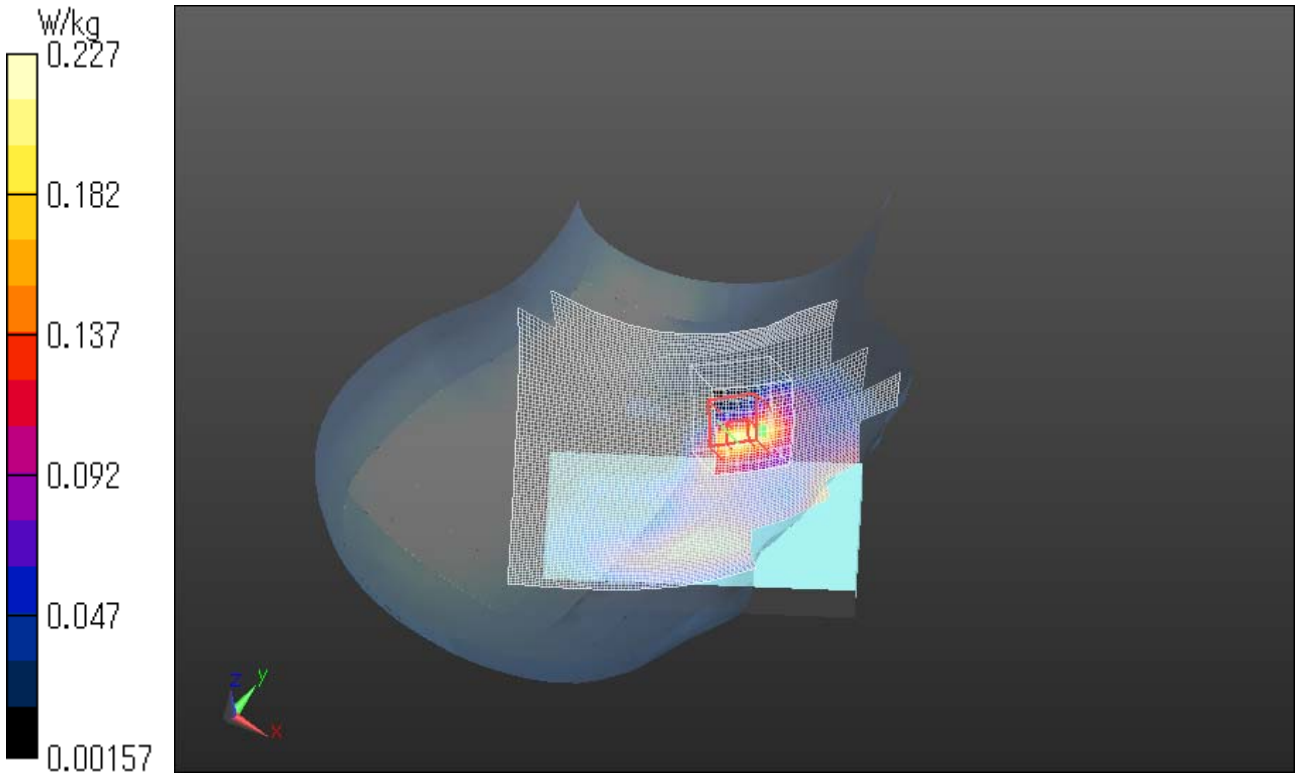

WCDMA II RMC 12.2kbps 1880.0MHz Right tilt
Communication System: UID 0, WCDMA (0); Communication System Band: Band II; Frequency: 1880 MHz;Duty Cycle: 1:1
Medium parameters used: f = 1880 MHz; σ = 1.42 S/m; ε_r = 39.366; ρ = 1000 kg/m^3
Phantom section: Right Section
Measurement Standard: DASY5 (IEEE/IEC/ANSI C63.19-2011)
DASY Configuration:
Probe: EX3DV4 - SN3825; ConvF(7.95, 7.95, 7.95); Calibrated: 2014/12/16;
Sensor-Surface: 2mm (Mechanical Surface Detection)
Electronics: DAE4 Sn509; Calibrated: 2014/07/28
Phantom: SAM (30deg probe tilt) with CRP v4.0; Type: QD000P40CB; Serial: TP:1333
DASY52 52.8.8(1222); SEMCAD X 14.6.10(7331)

Area Scan (91x111x1): Interpolated grid: dx=1.500 mm, dy=1.500 mm
Maximum value of SAR (interpolated) = 0.152 W/kg

Zoom Scan (10x8x7)/Cube 0: Measurement grid: dx=5mm, dy=5mm, dz=5mm
Reference Value = 5.880 V/m; Power Drift = -0.16 dB
Peak SAR (extrapolated) = 0.136 W/kg
SAR(1 g) = 0.087 W/kg; SAR(10 g) = 0.053 W/kg
Maximum value of SAR (measured) = 0.111 W/kg
Date: 2015/01/23
Ambient Temp. : 24.0 degree.C. Liquid Temp.; 23.5 degree.C.

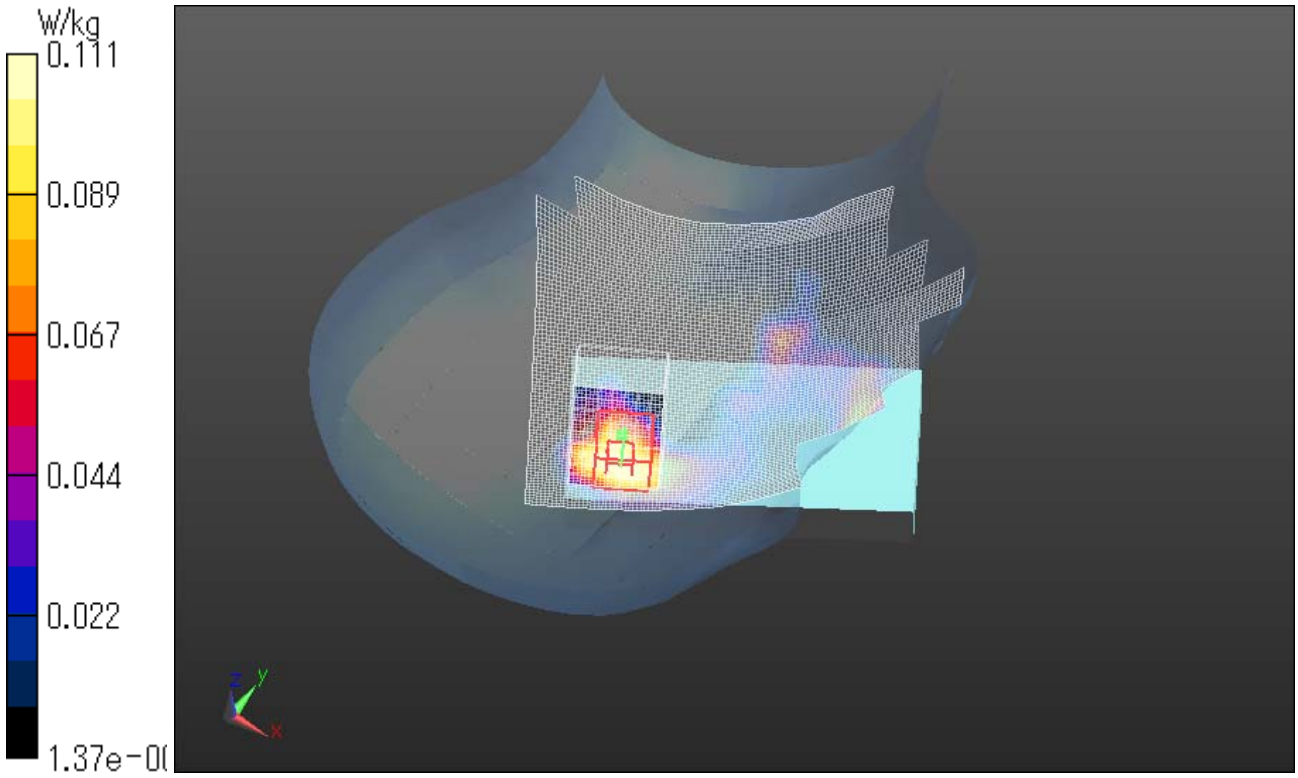

6. WCDMA Band II Body

WCDMA II RMC 12.2kbps 1880.0MHz Front side 10mm
Communication System: UID 0, WCDMA (0); Communication System Band: Band II; Frequency: 1880 MHz;Duty Cycle: 1:1
Medium parameters used: f = 1880 MHz; σ = 1.58 S/m; ε_r = 50.844; ρ = 1000 kg/m^3
Phantom section: Flat Section
Measurement Standard: DASY5 (IEEE/IEC/ANSI C63.19-2011)
DASY Configuration:
Probe: EX3DV4 - SN3825; ConvF(7.62, 7.62, 7.62); Calibrated: 2014/12/16;
Sensor-Surface: 2mm (Mechanical Surface Detection (Locations From Previous Scan Used)), Sensor-Surface: 2mm (Mechanical Surface Detection)
Electronics: DAE4 Sn509; Calibrated: 2014/07/28
Phantom: ELI v4.0 (20deg probe tilt); Type: QDOVA001BB; Serial: TP:1045
DASY52 52.8.8(1222); SEMCAD X 14.6.10(7331)

Area Scan (71x121x1): Interpolated grid: dx=1.200 mm, dy=1.200 mm
Maximum value of SAR (interpolated) = 1.48 W/kg

Zoom Scan (7x7x7)/Cube 0: Measurement grid: dx=5mm, dy=5mm, dz=5mm
Reference Value = 31.27 V/m; Power Drift = -0.01 dB
Peak SAR (extrapolated) = 1.85 W/kg
SAR(1 g) = 1.1 W/kg; SAR(10 g) = 0.604 W/kg
Maximum value of SAR (measured) = 1.50 W/kg

Date: 2015/01/28
Ambient Temp. : 24.0 degree.C. Liquid Temp.; 23.5 degree.C.

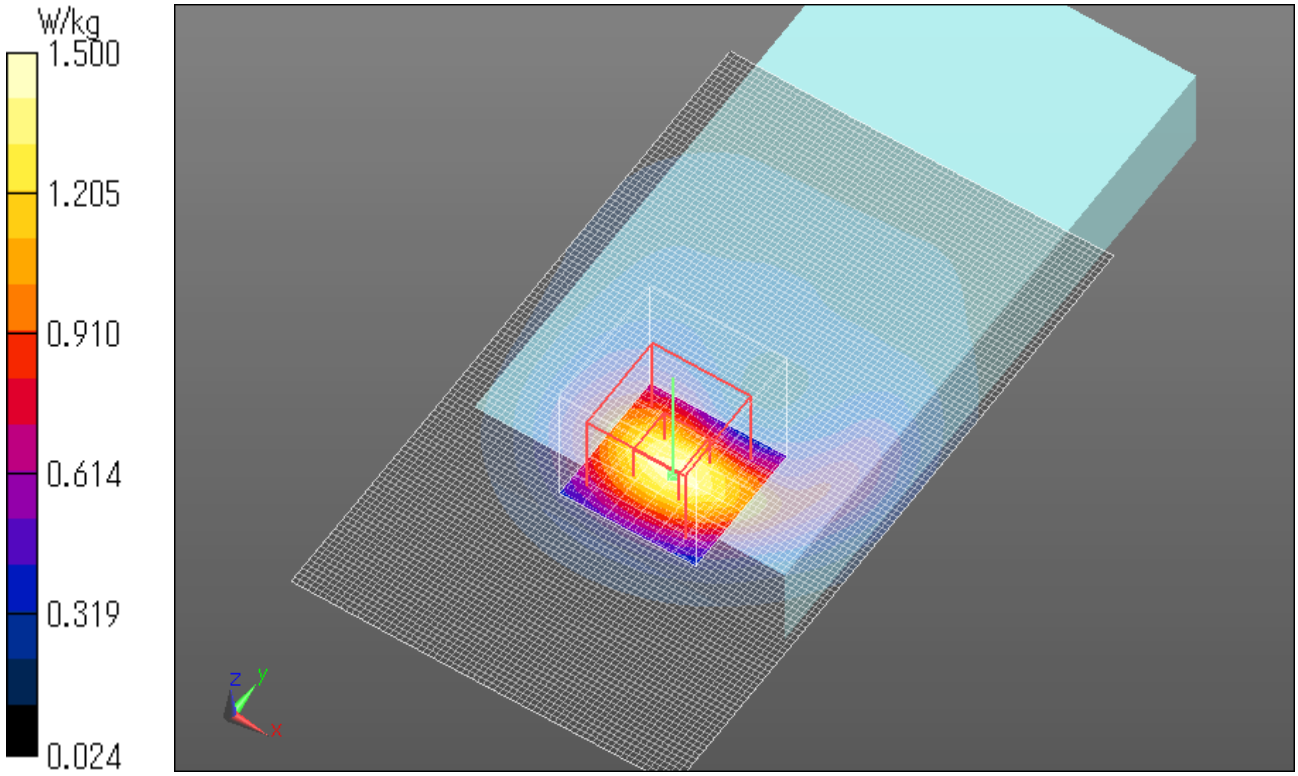

WCDMA II RMC 12.2kbps 1880.0MHz Rear side 10mm
Communication System: UID 0, WCDMA (0); Communication System Band: Band II; Frequency: 1880 MHz;Duty Cycle: 1:1
Medium parameters used: f = 1880 MHz; σ = 1.58 S/m; ε_r = 50.844; ρ = 1000 kg/m^3
Phantom section: Flat Section
Measurement Standard: DASY5 (IEEE/IEC/ANSI C63.19-2011)
DASY Configuration:
Probe: EX3DV4 - SN3825; ConvF(7.62, 7.62, 7.62); Calibrated: 2014/12/16;
Sensor-Surface: 2mm (Mechanical Surface Detection (Locations From Previous Scan Used)), Sensor-Surface: 2mm (Mechanical Surface Detection)
Electronics: DAE4 Sn509; Calibrated: 2014/07/28
Phantom: ELI v4.0 (20deg probe tilt); Type: QDOVA001BB; Serial: TP:1045
DASY52 52.8.8(1222); SEMCAD X 14.6.10(7331)

Area Scan 3 (71x101x1): Interpolated grid: dx=1.200 mm, dy=1.200 mm
Maximum value of SAR (interpolated) = 1.51 W/kg

Zoom Scan (7x7x7)/Cube 0: Measurement grid: dx=5mm, dy=5mm, dz=5mm
Reference Value = 31.08 V/m; Power Drift = -0.07 dB
Peak SAR (extrapolated) = 1.82 W/kg
SAR(1 g) = 1.08 W/kg; SAR(10 g) = 0.581 W/kg
Maximum value of SAR (measured) = 1.48 W/kg

Date: 2015/01/28
Ambient Temp. : 24.0 degree.C. Liquid Temp.; 23.5 degree.C.

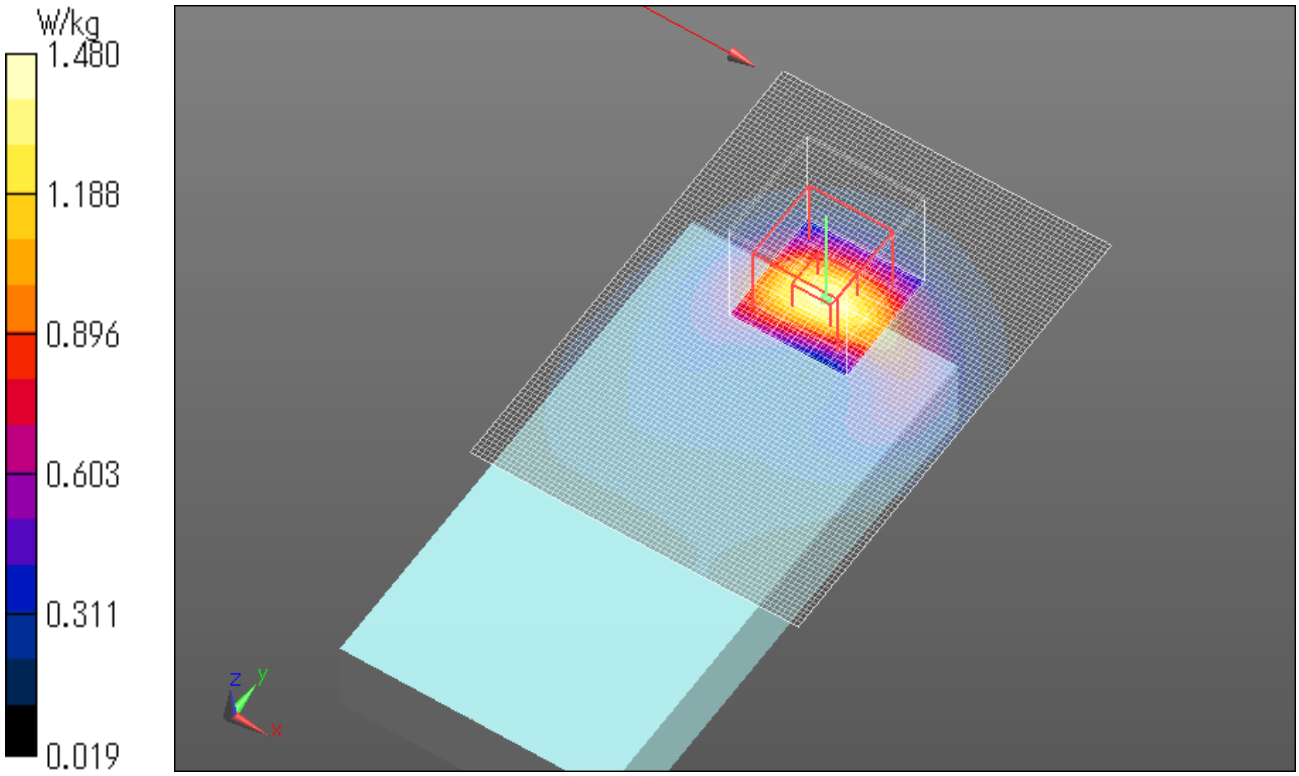

WCDMA II RMC 12.2kbps 1880.0MHz Bottom side 10mm
Communication System: UID 0, WCDMA (0); Communication System Band: Band II; Frequency: 1880 MHz;Duty Cycle: 1:1
Medium parameters used: f = 1880 MHz; σ = 1.58 S/m; ε_r = 50.844; ρ = 1000 kg/m^3
Phantom section: Flat Section
Measurement Standard: DASY5 (IEEE/IEC/ANSI C63.19-2011)
DASY Configuration:
Probe: EX3DV4 - SN3825; ConvF(7.62, 7.62, 7.62); Calibrated: 2014/12/16;
Sensor-Surface: 2mm (Mechanical Surface Detection)
Electronics: DAE4 Sn509; Calibrated: 2014/07/28
Phantom: ELI v4.0 (20deg probe tilt); Type: QDOVA001BB; Serial: TP:1045
DASY52 52.8.8(1222); SEMCAD X 14.6.10(7331)

Area Scan (71x121x1): Interpolated grid: dx=1.200 mm, dy=1.200 mm
Maximum value of SAR (interpolated) = 1.34 W/kg

Zoom Scan (7x7x7)/Cube 0: Measurement grid: dx=5mm, dy=5mm, dz=5mm
Reference Value = 28.81 V/m; Power Drift = -0.01 dB
Peak SAR (extrapolated) = 1.61 W/kg
SAR(1 g) = 0.893 W/kg; SAR(10 g) = 0.445 W/kg
Maximum value of SAR (measured) = 1.28 W/kg

Date: 2015/01/28
Ambient Temp. : 24.0 degree.C. Liquid Temp.; 23.5 degree.C.

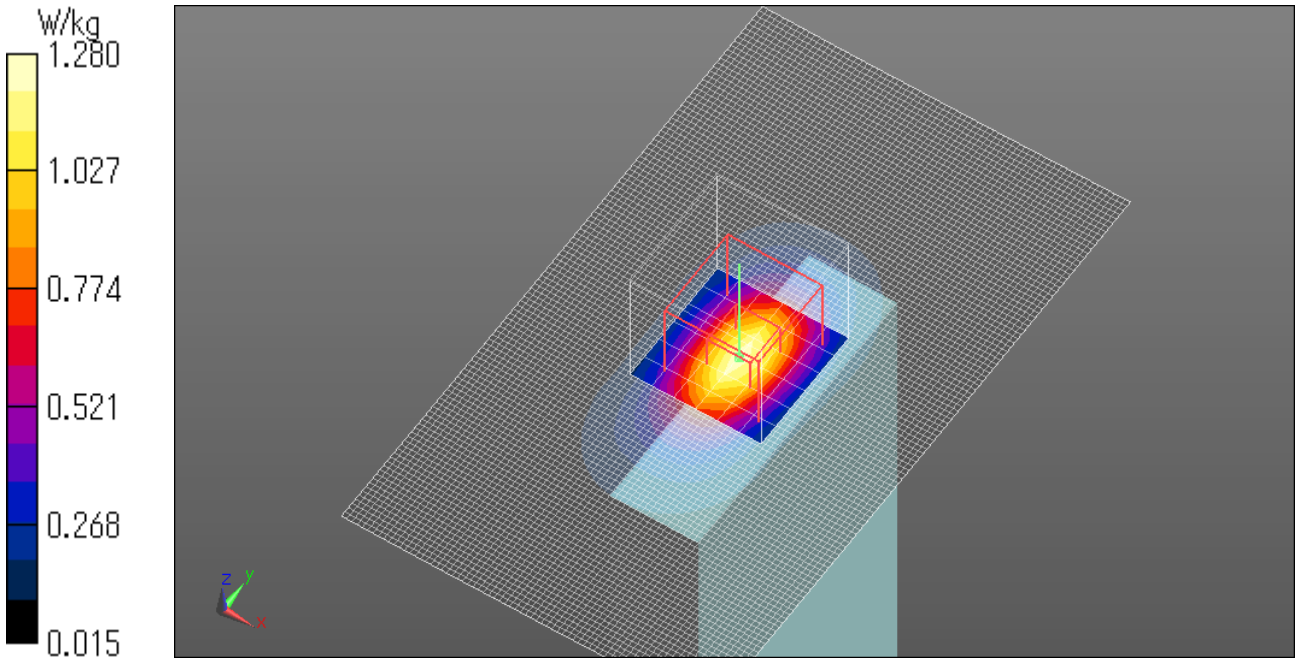

WCDMA II RMC 12.2kbps 1880MHz Left side 10mm
Communication System: UID 0, WCDMA (0); Communication System Band: Band II; Frequency: 1880 MHz;Duty Cycle: 1:1
Medium parameters used: f = 1880 MHz; σ = 1.58 S/m; ε_r = 50.844; ρ = 1000 kg/m^3
Phantom section: Flat Section
Measurement Standard: DASY5 (IEEE/IEC/ANSI C63.19-2011)
DASY Configuration:
Probe: EX3DV4 - SN3825; ConvF(7.62, 7.62, 7.62); Calibrated: 2014/12/16;
Sensor-Surface: 2mm (Mechanical Surface Detection)
Electronics: DAE4 Sn509; Calibrated: 2014/07/28
Phantom: ELI v4.0 (20deg probe tilt); Type: QDOVA001BB; Serial: TP:1045
DASY52 52.8.8(1222); SEMCAD X 14.6.10(7331)

Area Scan (71x151x1): Interpolated grid: dx=1.200 mm, dy=1.200 mm
Maximum value of SAR (interpolated) = 0.739 W/kg

Zoom Scan (7x7x7)/Cube 0: Measurement grid: dx=5mm, dy=5mm, dz=5mm
Reference Value = 21.85 V/m; Power Drift = -0.05 dB
Peak SAR (extrapolated) = 0.896 W/kg
SAR(1 g) = 0.529 W/kg; SAR(10 g) = 0.287 W/kg
Maximum value of SAR (measured) = 0.726 W/kg

Date: 2015/01/28
Ambient Temp. : 24.0 degree.C. Liquid Temp.; 23.5 degree.C.

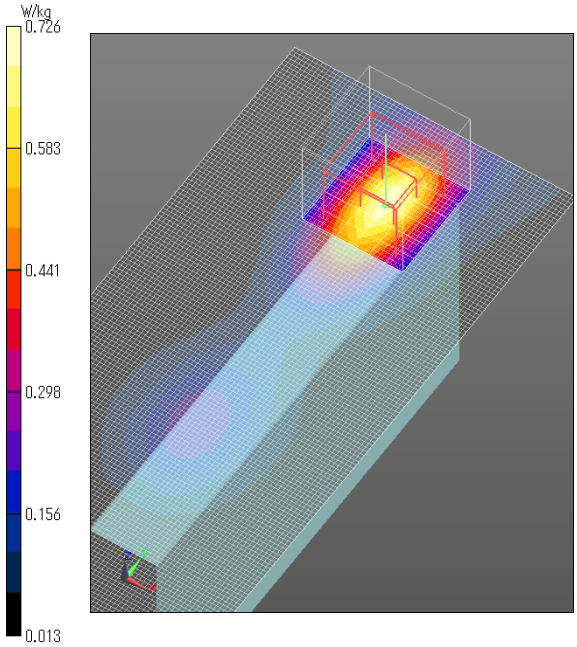

WCDMA II RMC 12.2kbps 1880.0MHz Right side 10mm
Communication System: UID 0, WCDMA (0); Communication System Band: Band II; Frequency: 1880 MHz;Duty Cycle: 1:1
Medium parameters used: f = 1880 MHz; σ = 1.58 S/m; ε_r = 50.844; ρ = 1000 kg/m^3
Phantom section: Flat Section
Measurement Standard: DASY5 (IEEE/IEC/ANSI C63.19-2011)
DASY Configuration:
Probe: EX3DV4 - SN3825; ConvF(7.62, 7.62, 7.62); Calibrated: 2014/12/16;
Sensor-Surface: 2mm (Mechanical Surface Detection (Locations From Previous Scan Used)), Sensor-Surface: 2mm (Mechanical Surface Detection)
Electronics: DAE4 Sn509; Calibrated: 2014/07/28
Phantom: ELI v4.0 (20deg probe tilt); Type: QDOVA001BB; Serial: TP:1045
DASY52 52.8.8(1222); SEMCAD X 14.6.10(7331)

Area Scan (71x151x1): Interpolated grid: dx=1.200 mm, dy=1.200 mm
Maximum value of SAR (interpolated) = 0.118 W/kg

Zoom Scan (7x7x7)/Cube 0: Measurement grid: dx=5mm, dy=5mm, dz=5mm
Reference Value = 8.619 V/m; Power Drift = -0.07 dB
Peak SAR (extrapolated) = 0.141 W/kg
SAR(1 g) = 0.080 W/kg; SAR(10 g) = 0.041 W/kg
Maximum value of SAR (measured) = 0.112 W/kg
Date: 2015/01/28
Ambient Temp. : 24.0 degree.C. Liquid Temp.; 23.5 degree.C.

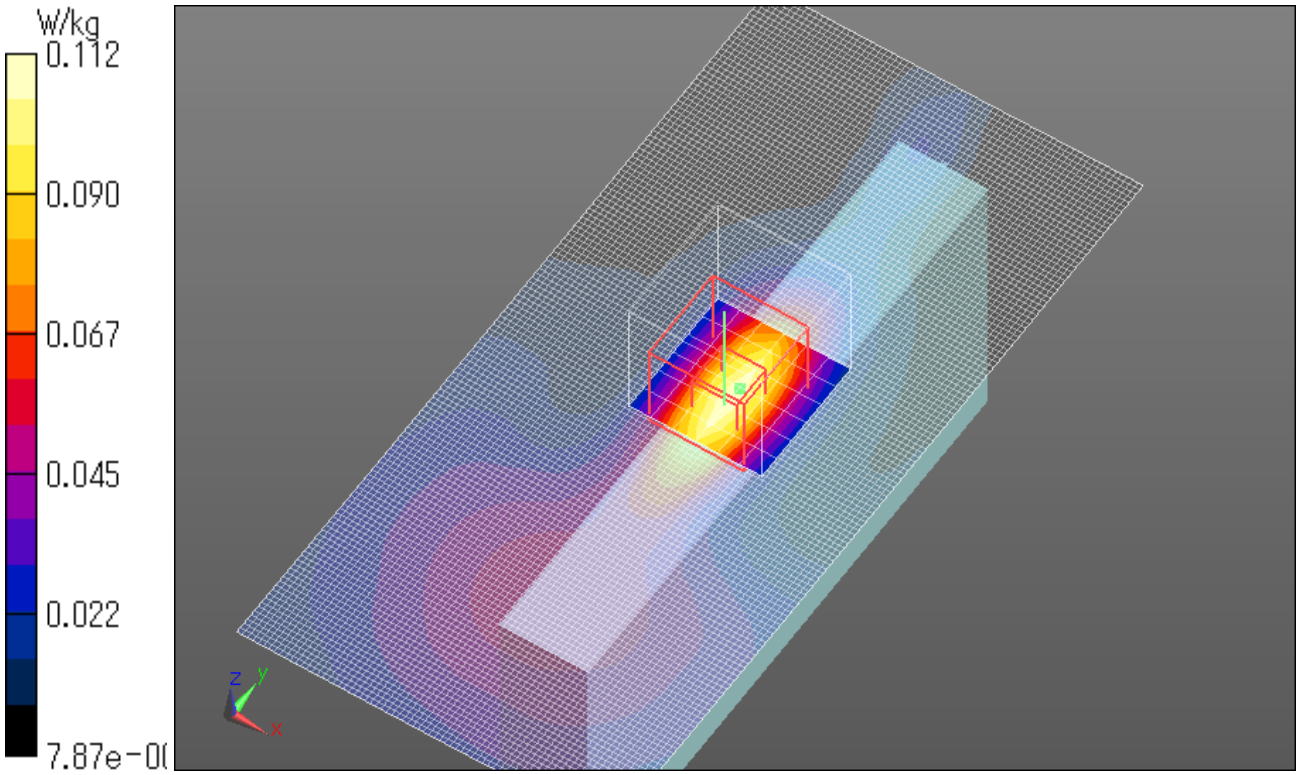

WCDMA II RMC 12.2kbps 1852.4MHz Front side 10mm
Communication System: UID 0, WCDMA (0); Communication System Band: Band II; Frequency: 1852.4 MHz;Duty Cycle: 1:1
Medium parameters used (interpolated): f = 1852.4 MHz; σ = 1.55 S/m; ε_r = 50.913; ρ = 1000 kg/m^3
Phantom section: Flat Section
Measurement Standard: DASY5 (IEEE/IEC/ANSI C63.19-2011)
DASY Configuration:
Probe: EX3DV4 - SN3825; ConvF(7.62, 7.62, 7.62); Calibrated: 2014/12/16;
Sensor-Surface: 2mm (Mechanical Surface Detection)
Electronics: DAE4 Sn509; Calibrated: 2014/07/28
Phantom: ELI v4.0 (20deg probe tilt); Type: QDOVA001BB; Serial: TP:1045
DASY52 52.8.8(1222); SEMCAD X 14.6.10(7331)

Area Scan 3 (71x121x1): Interpolated grid: dx=1.200 mm, dy=1.200 mm

Maximum value of SAR (interpolated) = 1.61 W/kg

Zoom Scan (7x7x7)/Cube 0: Measurement grid: dx=5mm, dy=5mm, dz=5mm
Reference Value = 28.06 V/m; Power Drift = 0.00 dB
Peak SAR (extrapolated) = 2.02 W/kg
SAR(1 g) = 1.19 W/kg; SAR(10 g) = 0.639 W/kg

Maximum value of SAR (measured) = 1.63 W/kg
Date: 2015/01/28
Ambient Temp. : 24.0 degree.C. Liquid Temp.; 23.5 degree.C.

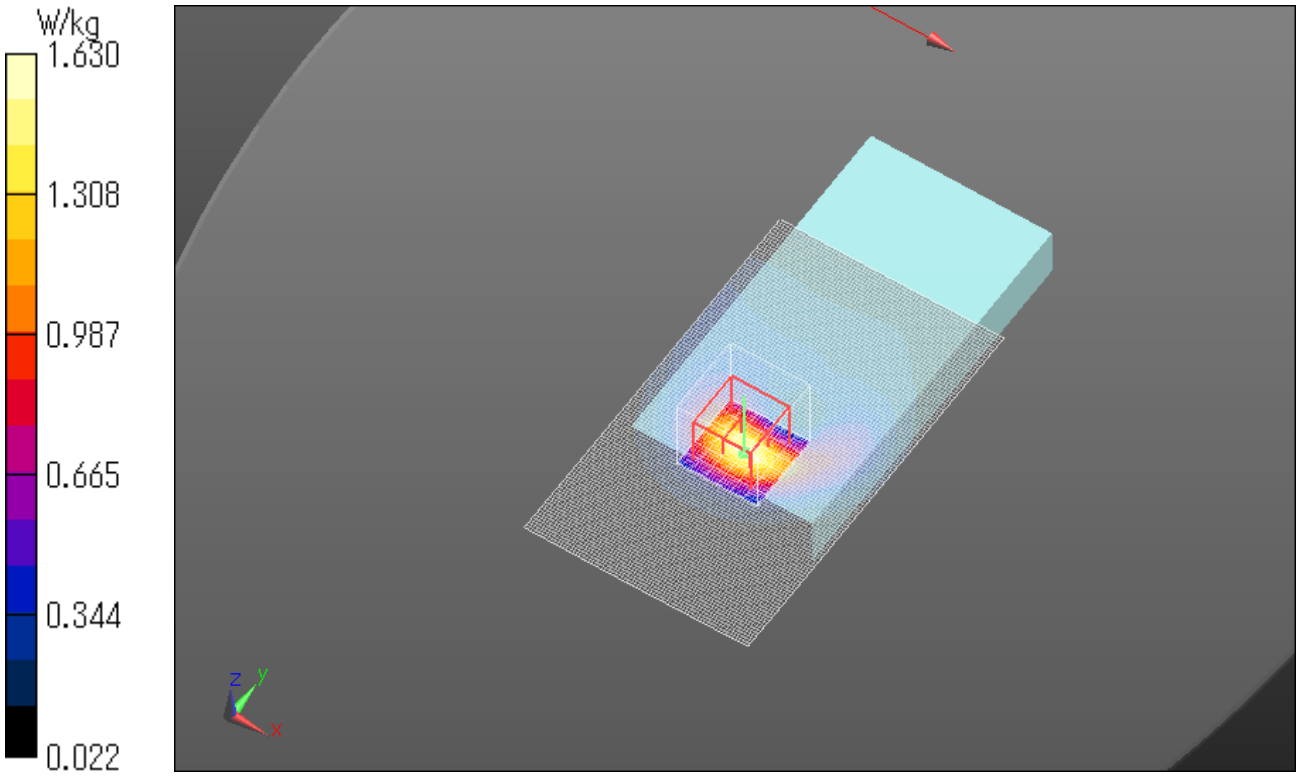

WCDMA II RMC 12.2kbps 1907.6MHz Front side 10mm
Communication System: UID 0, WCDMA (0); Communication System Band: Band II; Frequency: 1907.6 MHz; Duty Cycle: 1:1
Medium parameters used: f = 1908 MHz; σ = 1.475 S/m; ε_r = 52.072; ρ = 1000 kg/m^3
Phantom section: Flat Section
Measurement Standard: DASY5 (IEEE/IEC/ANSI C63.19-2011)
DASY5 Configuration
Probe: EX3DV4 - SN3917; ConvF(7.68, 7.68, 7.68); Calibrated: 2014/05/14;
Sensor-Surface: 2mm (Mechanical Surface Detection (Locations From Previous Scan Used)), Sensor-Surface: 2mm (Mechanical Surface Detection)
Electronics: DAE4 Sn1369; Calibrated: 2014/05/14
Phantom: ELI v4.0 (20deg probe tilt); Type: QDOVA001BB; Serial: TP:1095
Measurement SW: DASY52, Version 52.8 (8); SEMCAD X Version 14.6.10 (7331)

Area Scan (71x121x1): Interpolated grid: dx=1.200 mm, dy=1.200 mm
Maximum value of SAR (interpolated) = 1.26 W/kg

Zoom Scan (7x7x7)/Cube 0: Measurement grid: dx=5mm, dy=5mm, dz=5mm
Reference Value = 29.64 V/m; Power Drift = 0.08 dB
Peak SAR (extrapolated) = 1.52 W/kg
SAR(1 g) = 0.962 W/kg; SAR(10 g) = 0.549 W/kg
Maximum value of SAR (measured) = 1.27 W/kg
Date: 2015/01/30
Ambient Temp. : 24.0 degree.C. Liquid Temp.; 23.5 degree.C.

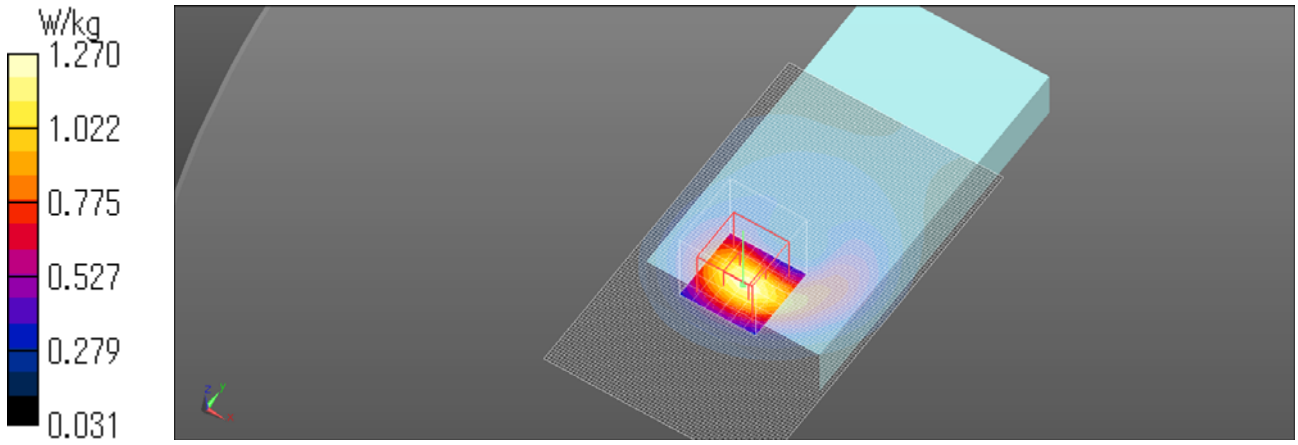

WCDMA II RMC 12.2kbps 1852.4MHz Rear side 10mm
Communication System: UID 0, WCDMA (0); Communication System Band: Band II; Frequency: 1852.4 MHz;Duty Cycle: 1:1
Medium parameters used (interpolated): f = 1852.4 MHz; σ = 1.55 S/m; ε_r = 50.913; ρ = 1000 kg/m^3
Phantom section: Flat Section
Measurement Standard: DASY5 (IEEE/IEC/ANSI C63.19-2011)
DASY Configuration:
Probe: EX3DV4 - SN3825; ConvF(7.62, 7.62, 7.62); Calibrated: 2014/12/16;
Sensor-Surface: 2mm (Mechanical Surface Detection)
Electronics: DAE4 Sn509; Calibrated: 2014/07/28
Phantom: ELI v4.0 (20deg probe tilt); Type: QDOVA001BB; Serial: TP:1045
DASY52 52.8.8(1222); SEMCAD X 14.6.10(7331)
Area Scan 3 (71x101x1): Interpolated grid: dx=1.200 mm, dy=1.200 mm

Maximum value of SAR (interpolated) = 1.36 W/kg

Zoom Scan (7x7x7)/Cube 0: Measurement grid: dx=5mm, dy=5mm, dz=5mm
Reference Value = 18.75 V/m; Power Drift = 0.03 dB
Peak SAR (extrapolated) = 1.61 W/kg
SAR(1 g) = 0.966 W/kg; SAR(10 g) = 0.531 W/kg

Maximum value of SAR (measured) = 1.31 W/kg
Date: 2015/01/28
Ambient Temp. : 24.0 degree.C. Liquid Temp.; 23.5 degree.C.

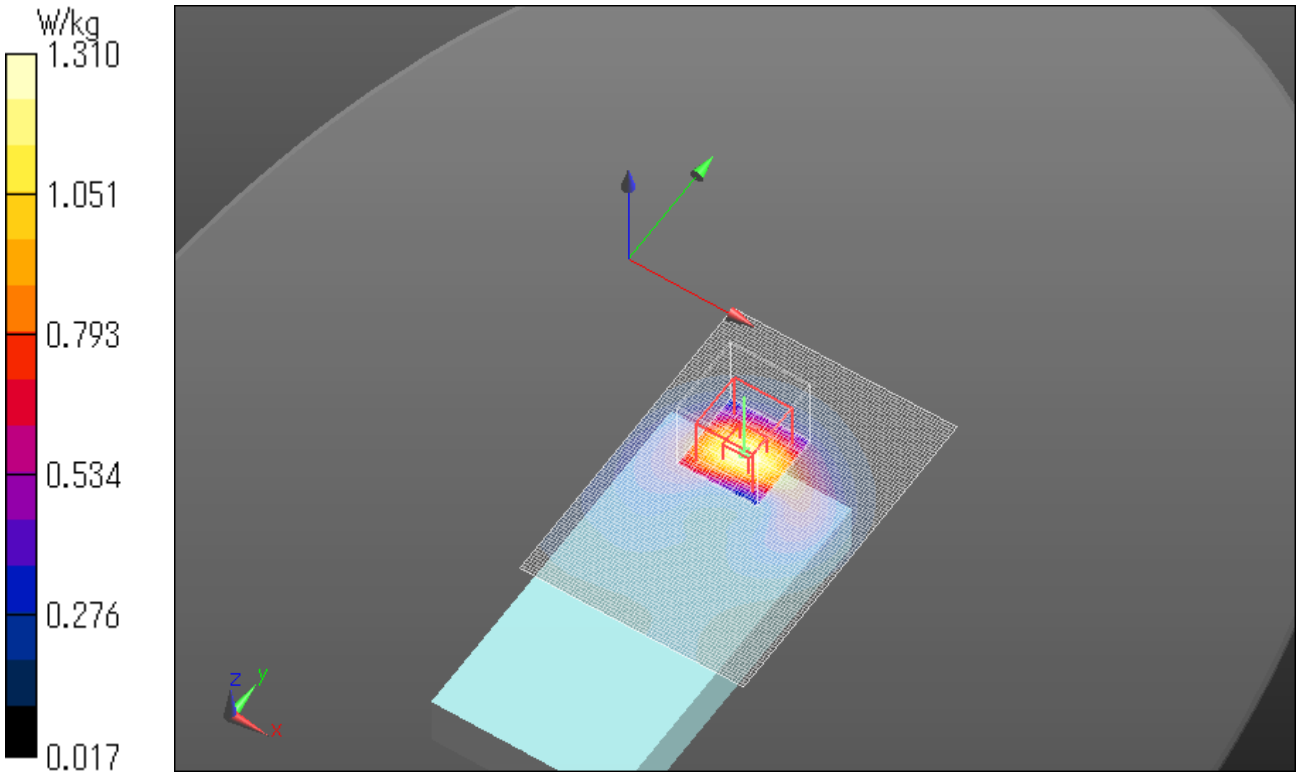

WCDMA II RMC 12.2kbps 1907.6MHz Rear side 10mm

Communication System: UID 0, WCDMA (0); Communication System Band: Band II; Frequency: 1907.6 MHz;Duty Cycle: 1:1
Medium parameters used: f = 1908 MHz; σ = 1.475 S/m; ε_r = 52.072; ρ = 1000 kg/m^3
Phantom section: Flat Section
Measurement Standard: DASY5 (IEEE/IEC/ANSI C63.19-2011)
DASY Configuration:
Probe: EX3DV4 - SN3917; ConvF(7.68, 7.68, 7.68); Calibrated: 2014/05/14;
Sensor-Surface: 2mm (Mechanical Surface Detection)
Electronics: DAE4 Sn1369; Calibrated: 2014/05/14
Phantom: ELI v4.0 (20deg probe tilt); Type: QDOVA001BB; Serial: TP:1095
DASY52 52.8.8(1222); SEMCAD X 14.6.10(7331)

Area Scan (71x101x1): Interpolated grid: dx=1.200 mm, dy=1.200 mm
Maximum value of SAR (interpolated) = 1.35 W/kg

Zoom Scan (7x7x7)/Cube 0: Measurement grid: dx=5mm, dy=5mm, dz=5mm
Reference Value = 30.66 V/m; Power Drift = -0.06 dB
Peak SAR (extrapolated) = 1.60 W/kg
SAR(1 g) = 1.01 W/kg; SAR(10 g) = 0.571 W/kg
Maximum value of SAR (measured) = 1.32 W/kg
Date: 2015/01/30
Ambient Temp. : 24.0 degree.C. Liquid Temp.; 23.5 degree.C.

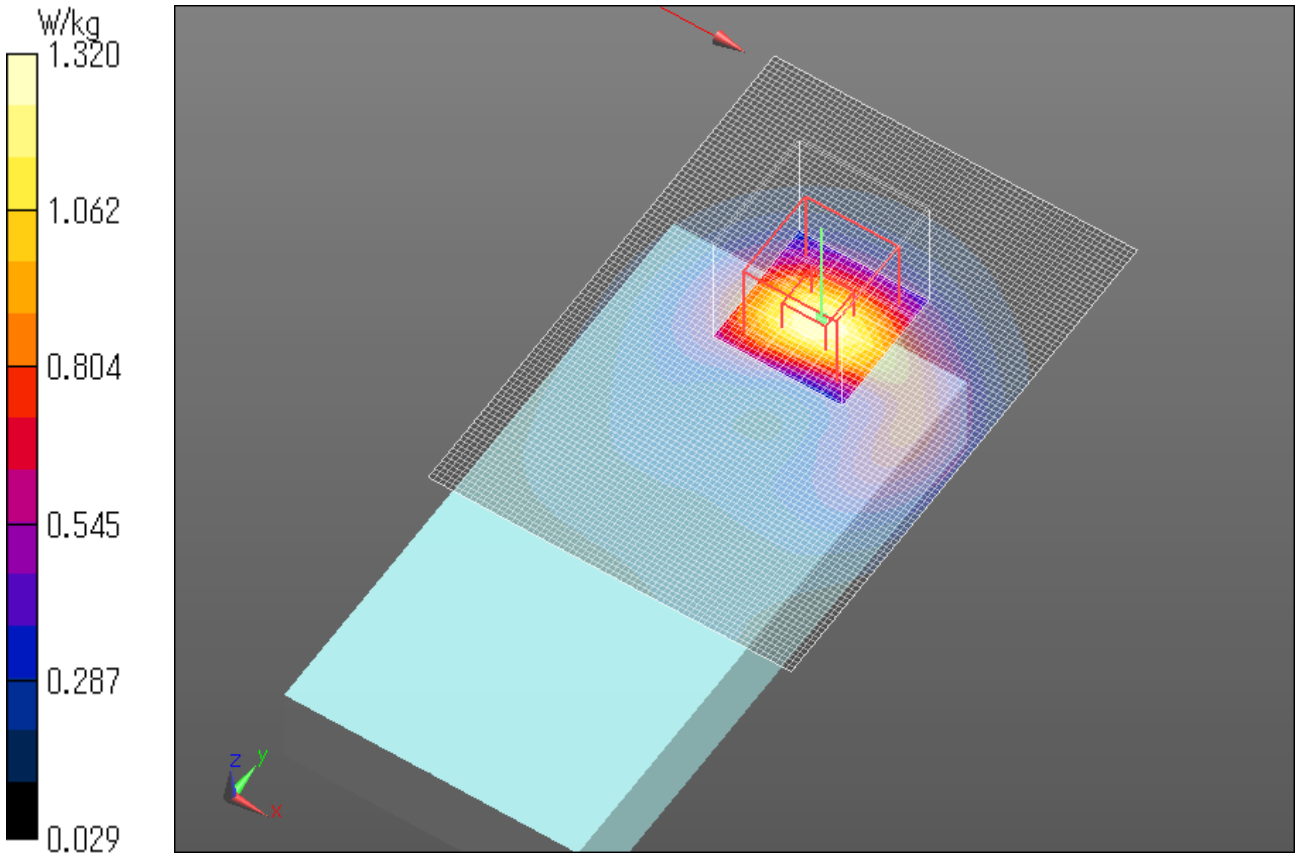

WCDMA II RMC 12.2kbps 1852.4MHz Bottom side 10mm
Communication System: UID 0, WCDMA (0); Communication System Band: Band II; Frequency: 1852.4 MHz;Duty Cycle: 1:1
Medium parameters used (interpolated): f = 1852.4 MHz; σ = 1.55 S/m; ε_r = 50.913; ρ = 1000 kg/m^3
Phantom section: Flat Section
Measurement Standard: DASY5 (IEEE/IEC/ANSI C63.19-2011)
DASY Configuration:
Probe: EX3DV4 - SN3825; ConvF(7.62, 7.62, 7.62); Calibrated: 2014/12/16;
Sensor-Surface: 2mm (Mechanical Surface Detection (Locations From Previous Scan Used)), Sensor-Surface: 2mm (Mechanical Surface Detection)
Electronics: DAE4 Sn509; Calibrated: 2014/07/28
Phantom: ELI v4.0 (20deg probe tilt); Type: QDOVA001BB; Serial: TP:1045
DASY52 52.8.8(1222); SEMCAD X 14.6.10(7331)

Area Scan (71x121x1): Interpolated grid: dx=1.200 mm, dy=1.200 mm
Maximum value of SAR (interpolated) = 1.10 W/kg

Zoom Scan (7x7x7)/Cube 0: Measurement grid: dx=5mm, dy=5mm, dz=5mm
Reference Value = 26.71 V/m; Power Drift = -0.01 dB
Peak SAR (extrapolated) = 1.34 W/kg
SAR(1 g) = 0.758 W/kg; SAR(10 g) = 0.389 W/kg
Maximum value of SAR (measured) = 1.07 W/kg

Date: 2015/01/28
Ambient Temp. : 24.0 degree.C. Liquid Temp.; 23.5 degree.C.

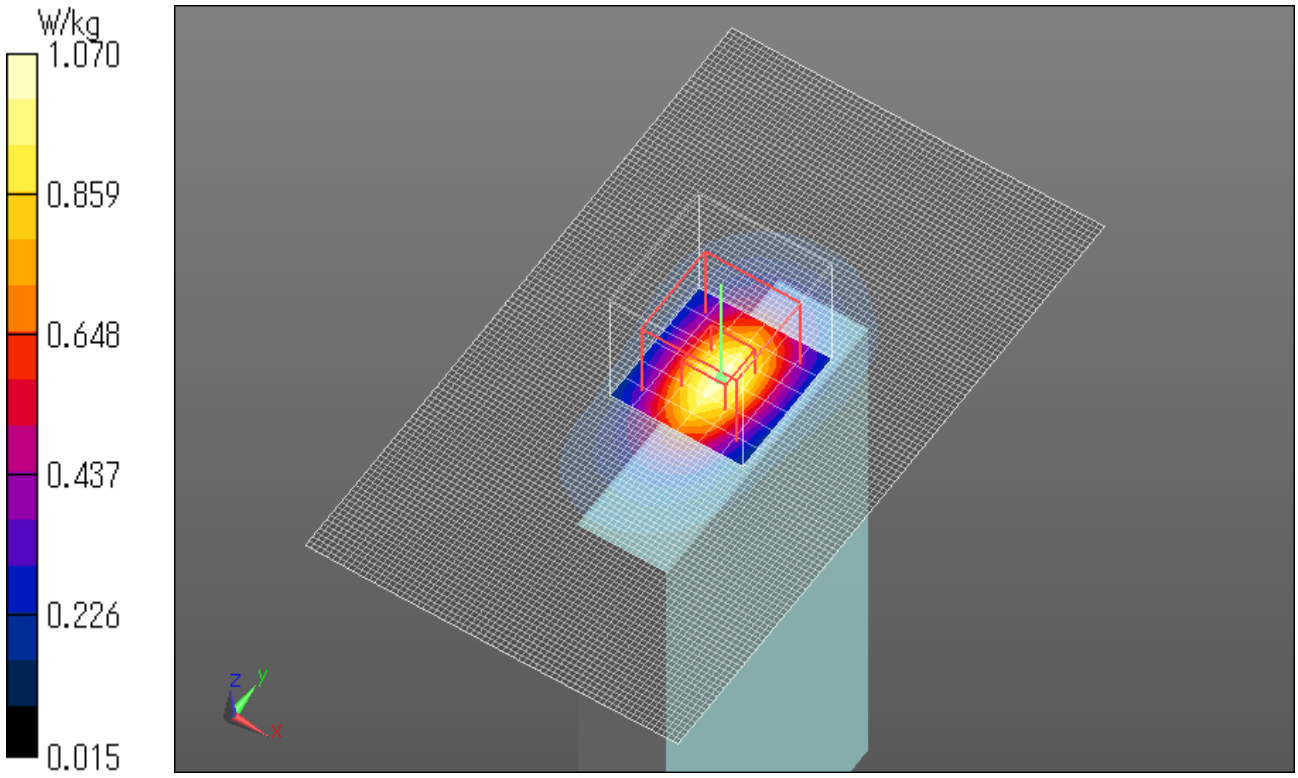

WCDMA II RMC 12.2kbps 1907.6MHz Bottom side 10mm
Communication System: UID 0, WCDMA (0); Communication System Band: Band II; Frequency: 1907.6 MHz;Duty Cycle: 1:1
Medium parameters used: f = 1908 MHz; σ = 1.475 S/m; ε_r = 52.072; ρ = 1000 kg/m^3
Phantom section: Flat Section
Measurement Standard: DASY5 (IEEE/IEC/ANSI C63.19-2011)
DASY Configuration:
Probe: EX3DV4 - SN3917; ConvF(7.68, 7.68, 7.68); Calibrated: 2014/05/14;
Sensor-Surface: 2mm (Mechanical Surface Detection (Locations From Previous Scan Used)), Sensor-Surface: 2mm (Mechanical Surface Detection)
Electronics: DAE4 Sn1369; Calibrated: 2014/05/14
Phantom: ELI v4.0 (20deg probe tilt); Type: QDOVA001BB; Serial: TP:1095
DASY52 52.8.8(1222); SEMCAD X 14.6.10(7331)

Area Scan (71x121x1): Interpolated grid: dx=1.200 mm, dy=1.200 mm
Maximum value of SAR (interpolated) = 1.24 W/kg

Zoom Scan (7x7x7)/Cube 0: Measurement grid: dx=5mm, dy=5mm, dz=5mm
Reference Value = 29.38 V/m; Power Drift = -0.05 dB
Peak SAR (extrapolated) = 1.47 W/kg
SAR(1 g) = 0.880 W/kg; SAR(10 g) = 0.464 W/kg
Maximum value of SAR (measured) = 1.22 W/kg
Date: 2015/01/30
Ambient Temp. : 24.0 degree.C. Liquid Temp.; 23.5 degree.C.

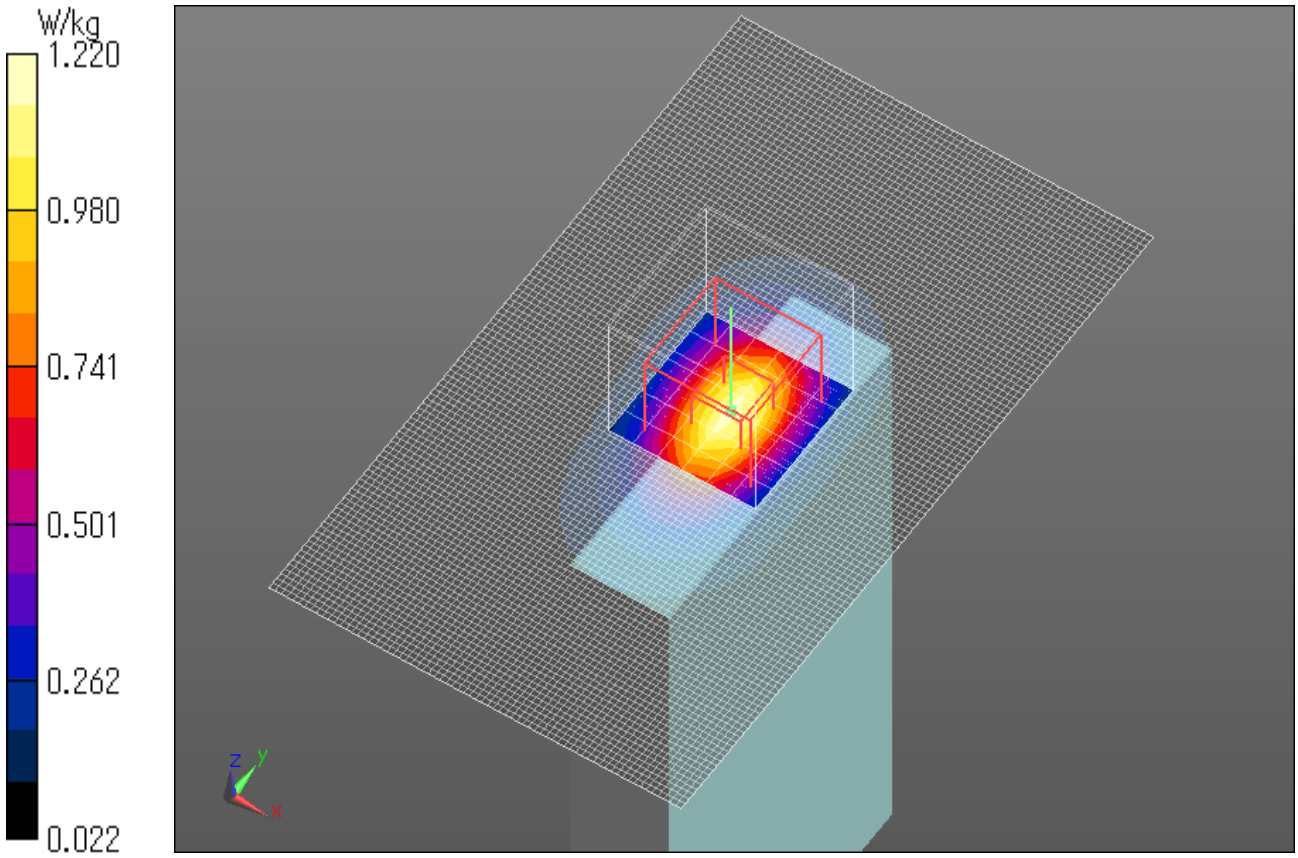

WCDMA II RMC 12.2kbps 1852.4MHz Front side 10mm with accessory
Communication System: UID 0, WCDMA (0); Communication System Band: Band II; Frequency: 1852.4 MHz;Duty Cycle: 1:1
Medium parameters used (interpolated): f = 1852.4 MHz; σ = 1.54 S/m; ε_r = 51.606; ρ = 1000 kg/m^3
Phantom section: Flat Section
Measurement Standard: DASY5 (IEEE/IEC/ANSI C63.19-2011)
DASY Configuration:
Probe: EX3DV4 - SN3825; ConvF(7.62, 7.62, 7.62); Calibrated: 2014/12/16;
Sensor-Surface: 2mm (Mechanical Surface Detection)
Electronics: DAE4 Sn509; Calibrated: 2014/07/28
Phantom: ELI v4.0 (20deg probe tilt); Type: QDOVA001BB; Serial: TP:1045
DASY52 52.8.8(1222); SEMCAD X 14.6.10(7331)

Area Scan 3 (71x121x1): Interpolated grid: dx=1.200 mm, dy=1.200 mm
Maximum value of SAR (interpolated) = 1.55 W/kg

Zoom Scan (7x7x7)/Cube 0: Measurement grid: dx=5mm, dy=5mm, dz=5mm
Reference Value = 32.33 V/m; Power Drift = 0.03 dB
Peak SAR (extrapolated) = 1.93 W/kg
SAR(1 g) = 1.14 W/kg; SAR(10 g) = 0.619 W/kg
Maximum value of SAR (measured) = 1.57 W/kg

Date: 2015/01/30
Ambient Temp. : 24.0 degree.C. Liquid Temp.; 23.5 degree.C.

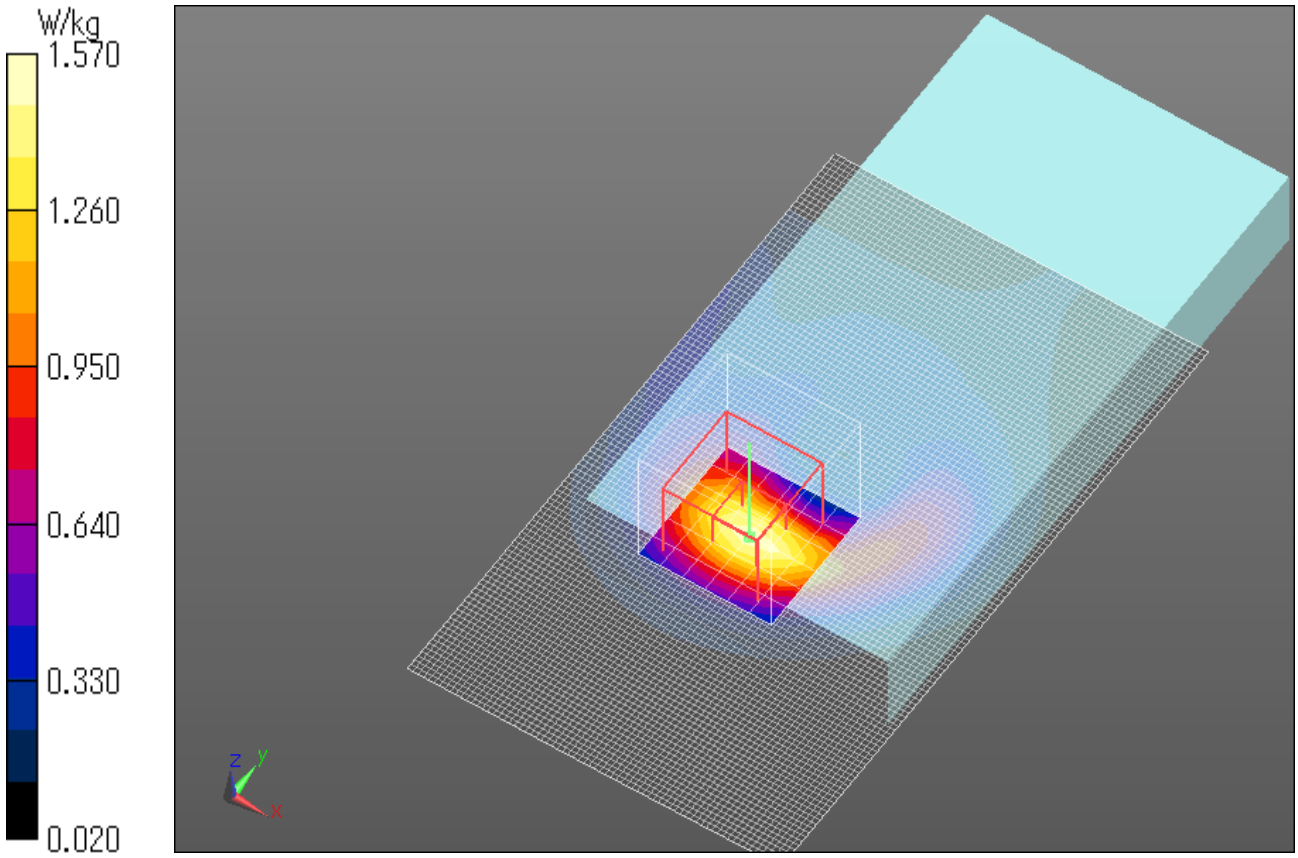

WCDMA II RMC 12.2kbps 1852.4MHz Front side 10mm Repeat
Communication System: UID 0, WCDMA (0); Communication System Band: Band II; Frequency: 1852.4 MHz;Duty Cycle: 1:1
Medium parameters used (interpolated): f = 1852.4 MHz; σ = 1.54 S/m; ε_r = 51.606; ρ = 1000 kg/m^3
Phantom section: Flat Section
Measurement Standard: DASY5 (IEEE/IEC/ANSI C63.19-2011)
DASY Configuration:
Probe: EX3DV4 - SN3825; ConvF(7.62, 7.62, 7.62); Calibrated: 2014/12/16;
Sensor-Surface: 2mm (Mechanical Surface Detection), Sensor-Surface: 2mm (Mechanical Surface Detection (Locations From Previous Scan Used))
Electronics: DAE4 Sn509; Calibrated: 2014/07/28
Phantom: ELI v4.0 (20deg probe tilt); Type: QDOVA001BB; Serial: TP:1045
DASY52 52.8.8(1222); SEMCAD X 14.6.10(7331)

Area Scan 3 (71x121x1): Interpolated grid: dx=1.200 mm, dy=1.200 mm
Maximum value of SAR (interpolated) = 1.42 W/kg

Zoom Scan (7x7x7)/Cube 0: Measurement grid: dx=5mm, dy=5mm, dz=5mm
Reference Value = 30.44 V/m; Power Drift = -0.02 dB
Peak SAR (extrapolated) = 1.73 W/kg
SAR(1 g) = 1.03 W/kg; SAR(10 g) = 0.567 W/kg
Maximum value of SAR (measured) = 1.39 W/kg

Date: 2015/01/30
Ambient Temp. : 24.0 degree.C. Liquid Temp.; 23.5 degree.C.

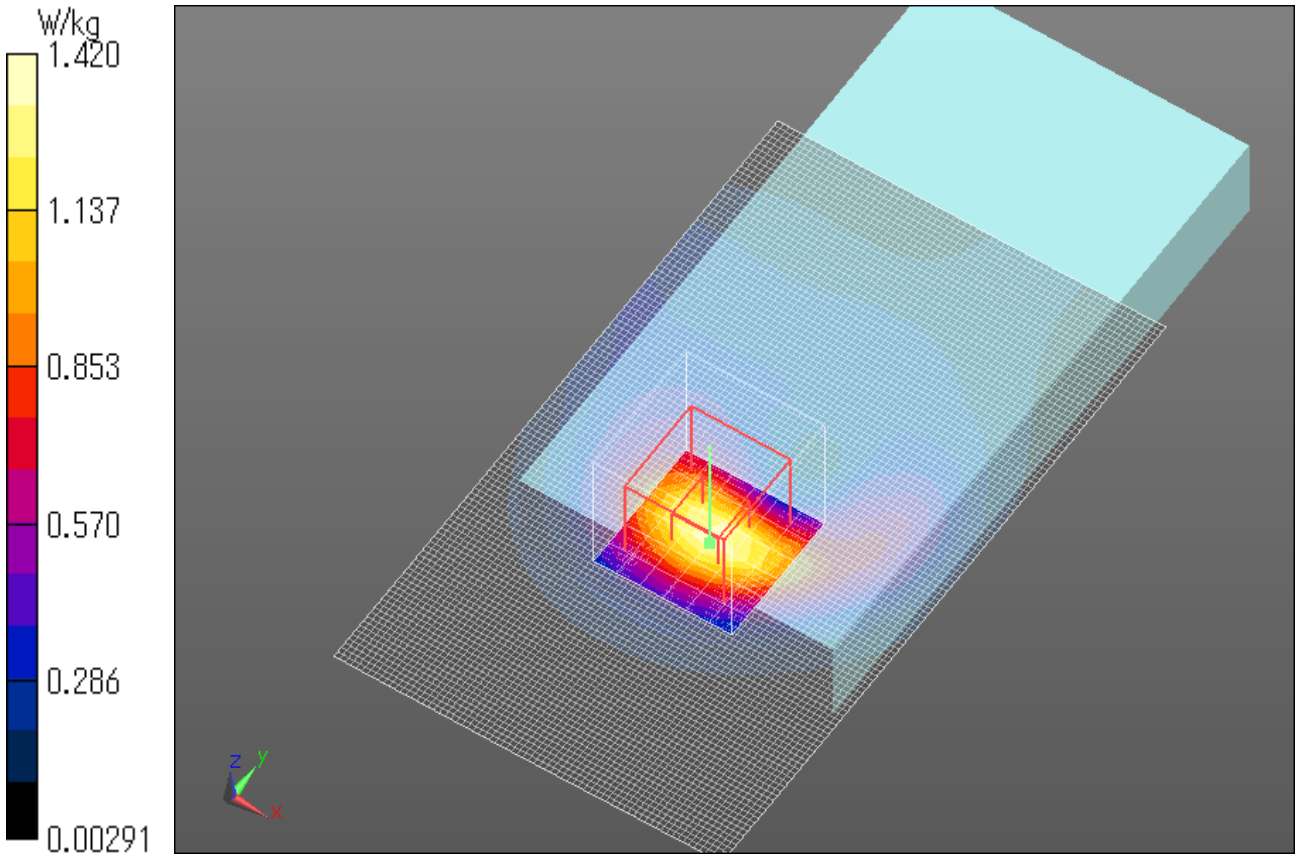

7. WCDMA Band IV Head

WCDMA IV RMC 12.2kbps 1732.6MHz Left Cheek
Communication System: UID 0, WCDMA (0); Communication System Band: Band IV; Frequency: 1732.6 MHz;Duty Cycle: 1:1
Medium parameters used: f = 1733 MHz; σ = 1.344 S/m; ε_r = 40.191; ρ = 1000 kg/m^3
Phantom section: Left Section
Measurement Standard: DASY5 (IEEE/IEC/ANSI C63.19-2011)
DASY Configuration:
Probe: EX3DV4 - SN3825; ConvF(8.46, 8.46, 8.46); Calibrated: 2014/12/16;
Sensor-Surface: 2mm (Mechanical Surface Detection)
Electronics: DAE4 Sn509; Calibrated: 2014/07/28
Phantom: SAM (30deg probe tilt) with CRP v4.0; Type: QD000P40CB; Serial: TP:1333
DASY52 52.8.8(1222); SEMCAD X 14.6.10(7331)

Area Scan (71x111x1): Interpolated grid: dx=1.500 mm, dy=1.500 mm
Maximum value of SAR (interpolated) = 0.544 W/kg

Zoom Scan (7x7x7)/Cube 0: Measurement grid: dx=5mm, dy=5mm, dz=5mm
Reference Value = 5.638 V/m; Power Drift = 0.18 dB
Peak SAR (extrapolated) = 0.605 W/kg
SAR(1 g) = 0.401 W/kg; SAR(10 g) = 0.255 W/kg
Maximum value of SAR (measured) = 0.509 W/kg
Date: 2015/01/24
Ambient Temp. : 24.0 degree.C. Liquid Temp.; 23.5 degree.C.

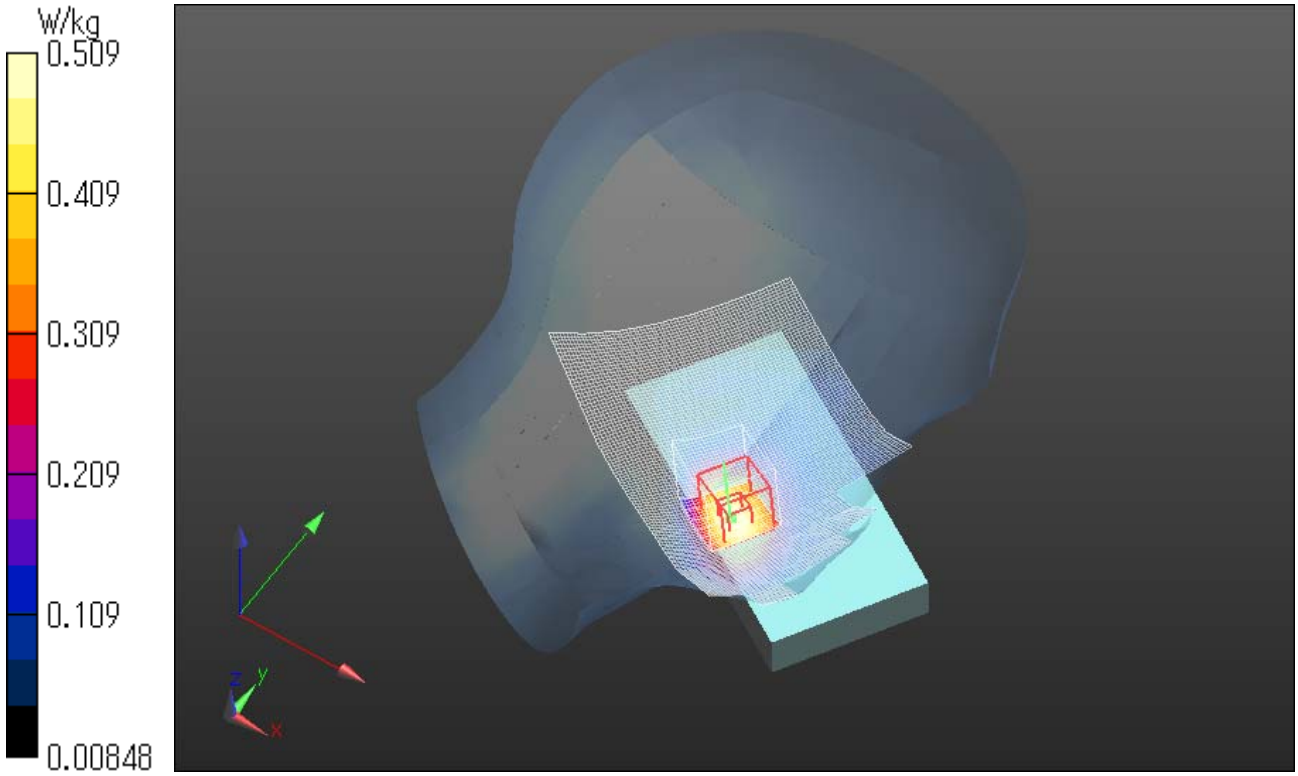

WCDMA IV RMC 12.2kbps 1732.6MHz Left tilt
Communication System: UID 0, WCDMA (0); Communication System Band: Band IV; Frequency: 1732.6 MHz;Duty Cycle: 1:1
Medium parameters used: f = 1733 MHz; σ = 1.344 S/m; ε_r = 40.191; ρ = 1000 kg/m^3
Phantom section: Left Section
Measurement Standard: DASY5 (IEEE/IEC/ANSI C63.19-2011)
DASY Configuration:
Probe: EX3DV4 - SN3825; ConvF(8.46, 8.46, 8.46); Calibrated: 2014/12/16;
Sensor-Surface: 2mm (Mechanical Surface Detection)
Electronics: DAE4 Sn509; Calibrated: 2014/07/28
Phantom: SAM (30deg probe tilt) with CRP v4.0; Type: QD000P40CB; Serial: TP:1333
DASY52 52.8.8(1222); SEMCAD X 14.6.10(7331)

Area Scan (71x111x1): Interpolated grid: dx=1.500 mm, dy=1.500 mm
Maximum value of SAR (interpolated) = 0.117 W/kg

Zoom Scan 2 (7x7x7)/Cube 0: Measurement grid: dx=5mm, dy=5mm, dz=5mm
Reference Value = 7.413 V/m; Power Drift = 0.01 dB
Peak SAR (extrapolated) = 0.131 W/kg
SAR(1 g) = 0.084 W/kg; SAR(10 g) = 0.050 W/kg
Maximum value of SAR (measured) = 0.109 W/kg
Date: 2015/01/24
Ambient Temp. : 24.0 degree.C. Liquid Temp.; 23.5 degree.C.

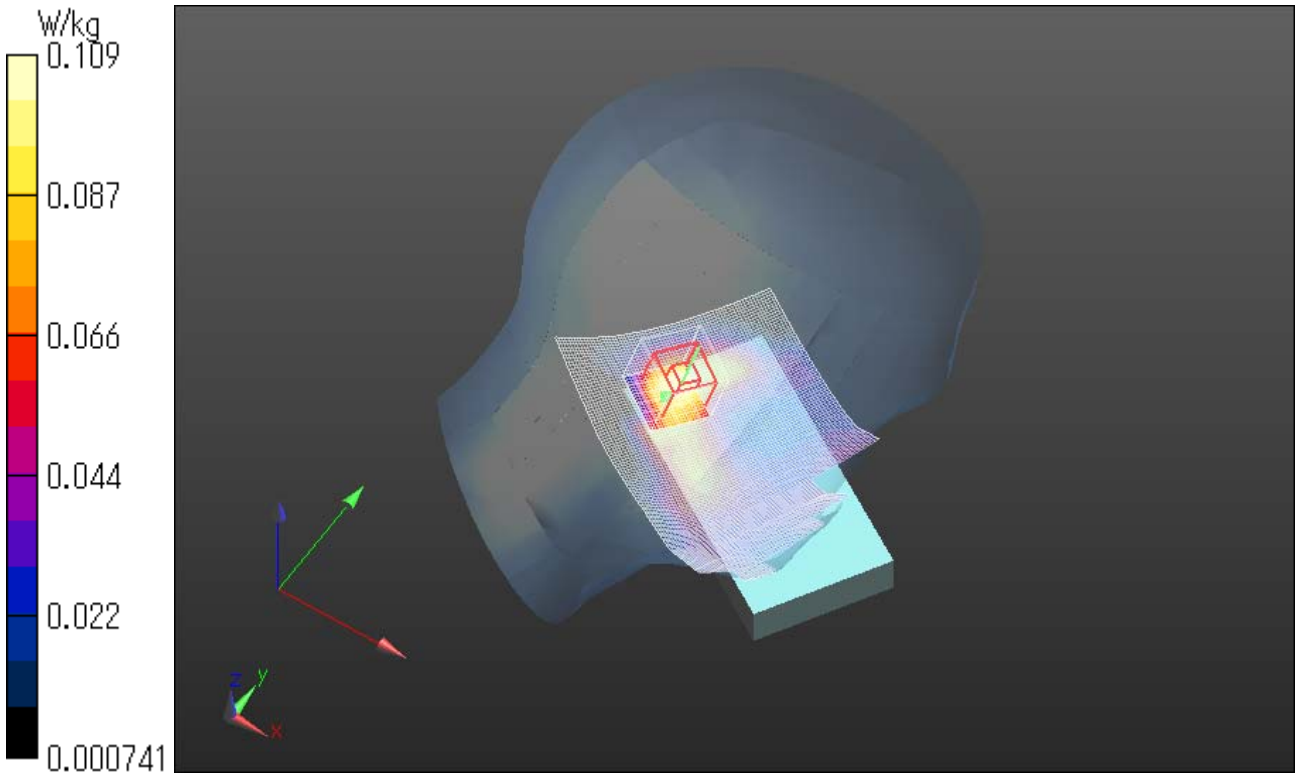

WCDMA IV RMC 12.2kbps 1732.6MHz Right cheek
Communication System: UID 0, WCDMA (0); Communication System Band: Band IV; Frequency: 1732.6 MHz;Duty Cycle: 1:1
Medium parameters used: f = 1733 MHz; σ = 1.344 S/m; ε_r = 40.191; ρ = 1000 kg/m^3
Phantom section: Right Section
Measurement Standard: DASY5 (IEEE/IEC/ANSI C63.19-2011)
DASY Configuration:
Probe: EX3DV4 - SN3825; ConvF(8.46, 8.46, 8.46); Calibrated: 2014/12/16;
Sensor-Surface: 2mm (Mechanical Surface Detection)
Electronics: DAE4 Sn509; Calibrated: 2014/07/28
Phantom: SAM (30deg probe tilt) with CRP v4.0; Type: QD000P40CB; Serial: TP:1333
DASY52 52.8.8(1222); SEMCAD X 14.6.10(7331)

Area Scan (91x111x1): Interpolated grid: dx=1.500 mm, dy=1.500 mm
Maximum value of SAR (interpolated) = 0.302 W/kg

Zoom Scan (8x7x7)/Cube 0: Measurement grid: dx=5mm, dy=5mm, dz=5mm
Reference Value = 5.185 V/m; Power Drift = -0.12 dB
Peak SAR (extrapolated) = 0.360 W/kg
SAR(1 g) = 0.238 W/kg; SAR(10 g) = 0.154 W/kg
Maximum value of SAR (measured) = 0.302 W/kg
Date: 2015/01/24
Ambient Temp. : 24.0 degree.C. Liquid Temp.; 23.5 degree.C.

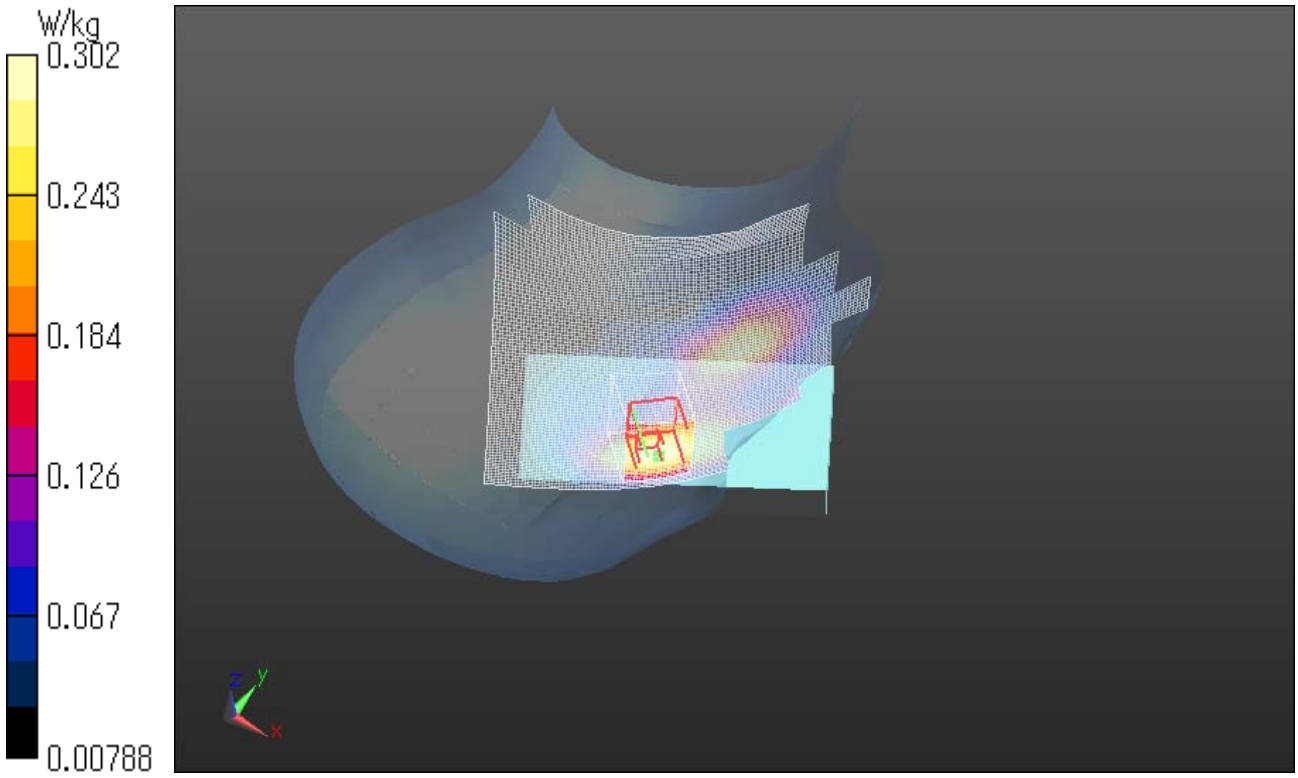

WCDMA IV RMC 12.2kbps 1732.6MHz Right tilt
Communication System: UID 0, WCDMA (0); Communication System Band: Band IV; Frequency: 1732.6 MHz;Duty Cycle: 1:1
Medium parameters used: f = 1733 MHz; σ = 1.344 S/m; ε_r = 40.191; ρ = 1000 kg/m^3
Phantom section: Right Section
Measurement Standard: DASY5 (IEEE/IEC/ANSI C63.19-2011)
DASY Configuration:
Probe: EX3DV4 - SN3825; ConvF(8.46, 8.46, 8.46); Calibrated: 2014/12/16;
Sensor-Surface: 2mm (Mechanical Surface Detection)
Electronics: DAE4 Sn509; Calibrated: 2014/07/28
Phantom: SAM (30deg probe tilt) with CRP v4.0; Type: QD000P40CB; Serial: TP:1333
DASY52 52.8.8(1222); SEMCAD X 14.6.10(7331)

Area Scan (91x111x1): Interpolated grid: dx=1.500 mm, dy=1.500 mm
Maximum value of SAR (interpolated) = 0.141 W/kg

Zoom Scan (8x7x7)/Cube 0: Measurement grid: dx=5mm, dy=5mm, dz=5mm
Reference Value = 7.189 V/m; Power Drift = -0.10 dB
Peak SAR (extrapolated) = 0.169 W/kg
SAR(1 g) = 0.113 W/kg; SAR(10 g) = 0.071 W/kg
Maximum value of SAR (measured) = 0.143 W/kg
Date: 2015/01/24
Ambient Temp. : 24.0 degree.C. Liquid Temp.; 23.5 degree.C.

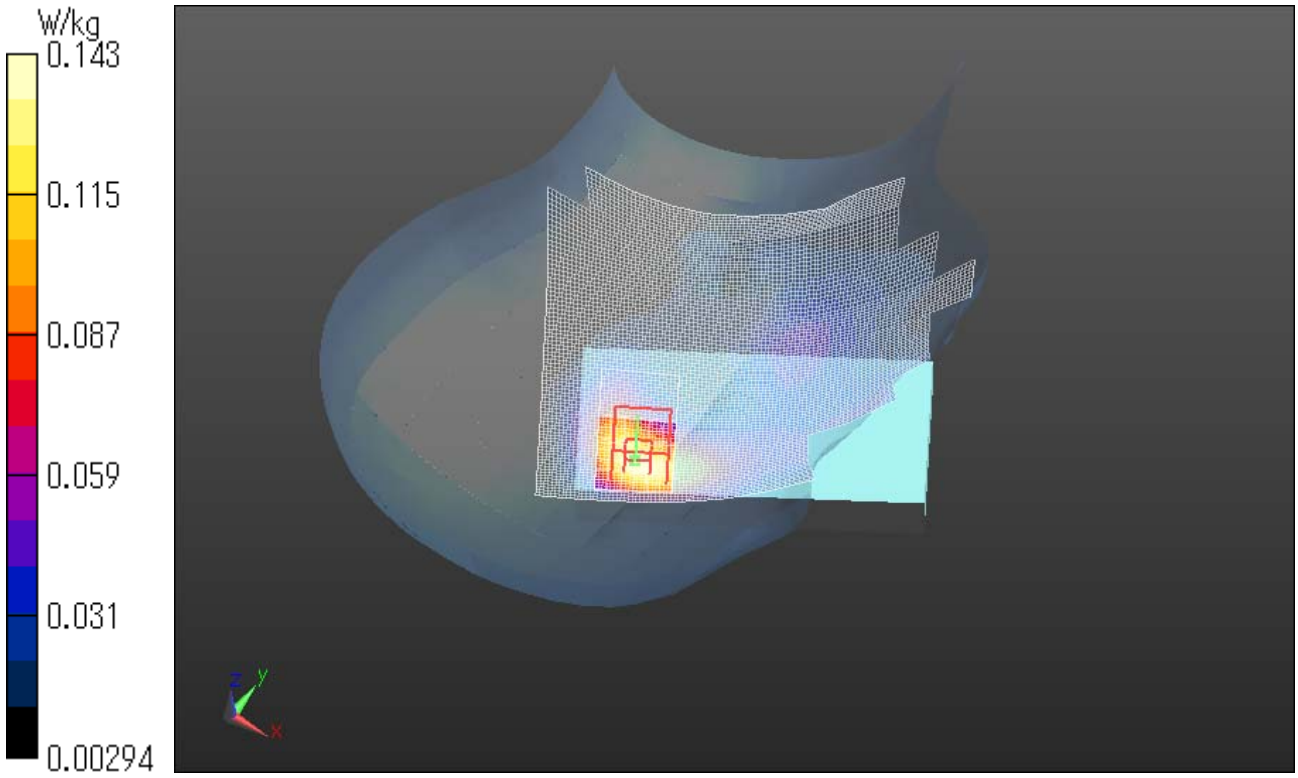

8. WCDMA Band IV Body

WCDMA IV RMC 12.2kbps 1732.6MHz Front side 10mm
Communication System: UID 0, WCDMA (0); Communication System Band: Band IV; Frequency: 1732.6 MHz;Duty Cycle: 1:1
Medium parameters used: f = 1733 MHz; σ = 1.415 S/m; ε_r = 51.592; ρ = 1000 kg/m^3
Phantom section: Flat Section
Measurement Standard: DASY5 (IEEE/IEC/ANSI C63.19-2011)
DASY Configuration:
Probe: EX3DV4 - SN3825; ConvF(7.94, 7.94, 7.94); Calibrated: 2014/12/16;
Sensor-Surface: 2mm (Mechanical Surface Detection)
Electronics: DAE4 Sn509; Calibrated: 2014/07/28
Phantom: ELI v4.0 (20deg probe tilt); Type: QDOVA001BB; Serial: TP:1045
DASY52 52.8.8(1222); SEMCAD X 14.6.10(7331)
Area Scan 3 (71x121x1): Interpolated grid: dx=1.200 mm, dy=1.200 mm
Maximum value of SAR (interpolated) = 1.06 W/kg
Zoom Scan (7x7x7)/Cube 0: Measurement grid: dx=5mm, dy=5mm, dz=5mm
Reference Value = 27.56 V/m; Power Drift = 0.06 dB
Peak SAR (extrapolated) = 1.29 W/kg
SAR(1 g) = 0.791 W/kg; SAR(10 g) = 0.456 W/kg
Maximum value of SAR (measured) = 1.06 W/kg

Zoom Scan 2 (7x7x7)/Cube 0: Measurement grid: dx=5mm, dy=5mm, dz=5mm
Reference Value = 27.56 V/m; Power Drift = 0.06 dB
Peak SAR (extrapolated) = 1.27 W/kg
SAR(1 g) = 0.680 W/kg; SAR(10 g) = 0.352 W/kg

Maximum value of SAR (measured) = 1.00 W/kg
Date: 2015/01/29
Ambient Temp. : 24.0 degree.C. Liquid Temp.; 23.5 degree.C.

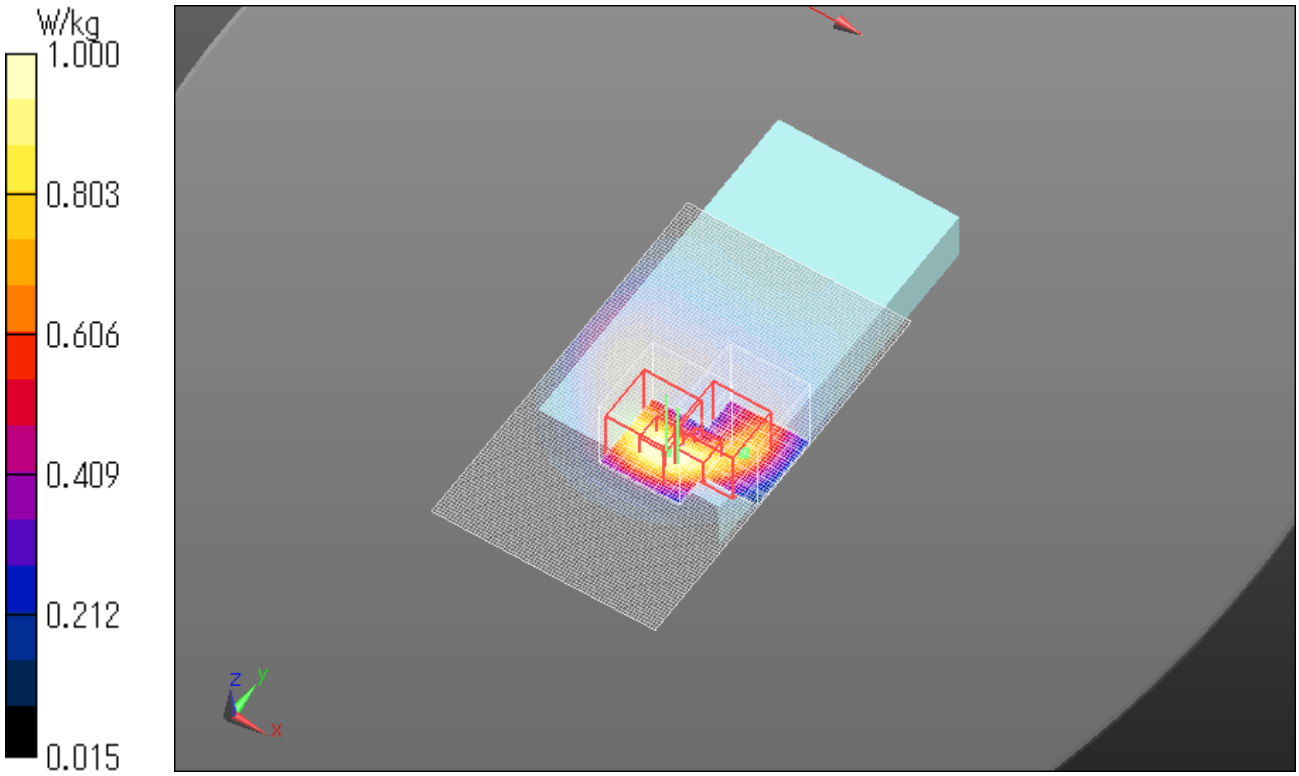

WCDMA IV RMC 12.2kbps 1732.6MHz Rear side 10mm
Communication System: UID 0, WCDMA (0); Communication System Band: Band IV; Frequency: 1732.6 MHz;Duty Cycle: 1:1
Medium parameters used: f = 1733 MHz; σ = 1.415 S/m; ε_r = 51.592; ρ = 1000 kg/m^3
Phantom section: Flat Section
Measurement Standard: DASY5 (IEEE/IEC/ANSI C63.19-2011)
DASY Configuration:
Probe: EX3DV4 - SN3825; ConvF(7.94, 7.94, 7.94); Calibrated: 2014/12/16;
Sensor-Surface: 2mm (Mechanical Surface Detection)
Electronics: DAE4 Sn509; Calibrated: 2014/07/28
Phantom: ELI v4.0 (20deg probe tilt); Type: QDOVA001BB; Serial: TP:1045
DASY52 52.8.8(1222); SEMCAD X 14.6.10(7331)

Area Scan 3 (71x101x1): Interpolated grid: dx=1.200 mm, dy=1.200 mm
Maximum value of SAR (interpolated) = 1.29 W/kg

Zoom Scan (7x7x7)/Cube 0: Measurement grid: dx=5mm, dy=5mm, dz=5mm
Reference Value = 20.92 V/m; Power Drift = 0.00 dB
Peak SAR (extrapolated) = 1.54 W/kg
SAR(1 g) = 0.969 W/kg; SAR(10 g) = 0.557 W/kg
Maximum value of SAR (measured) = 1.29 W/kg
Date: 2015/01/29
Ambient Temp. : 24.0 degree.C. Liquid Temp.; 23.5 degree.C.

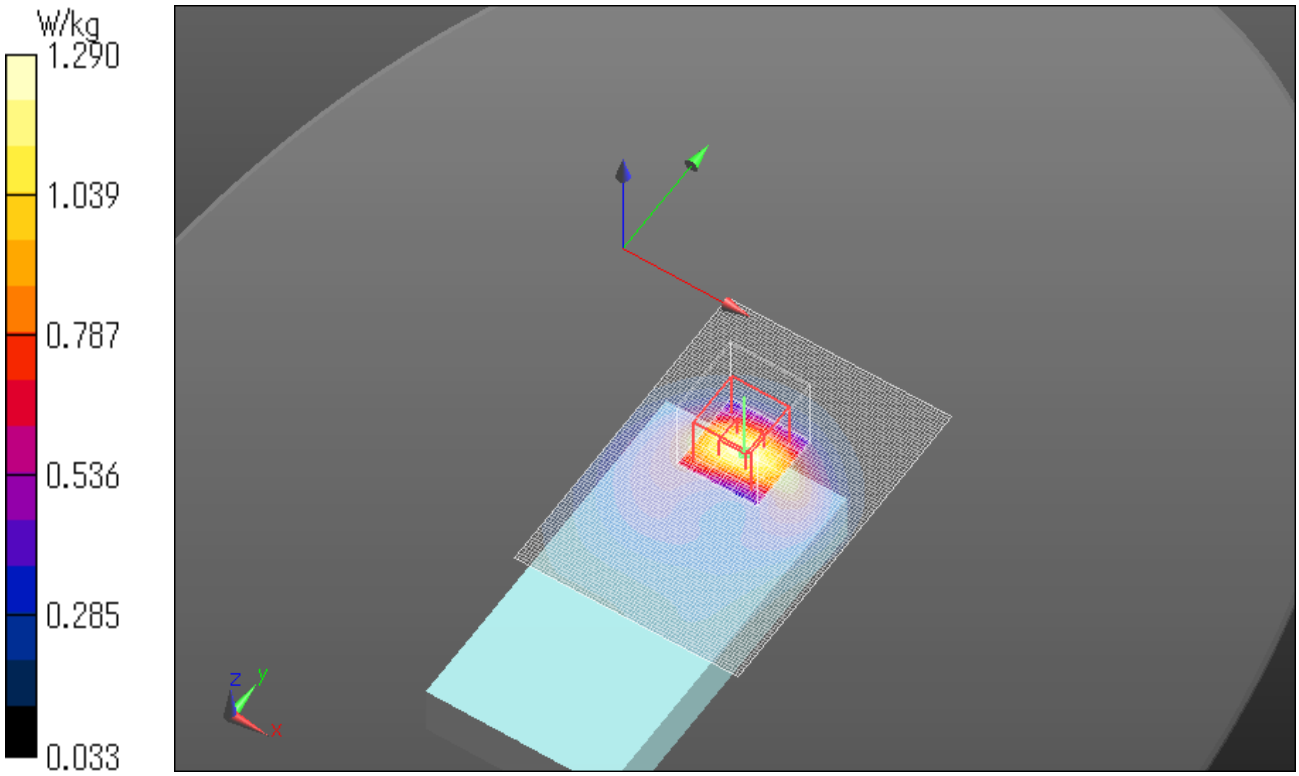

WCDMA IV RMC 12.2kbps 1732.6MHz Bottom side 10mm
Communication System: UID 0, WCDMA (0); Communication System Band: Band IV; Frequency: 1732.6 MHz;Duty Cycle: 1:1
Medium parameters used: f = 1733 MHz; σ = 1.415 S/m; ε_r = 51.592; ρ = 1000 kg/m^3
Phantom section: Flat Section
Measurement Standard: DASY5 (IEEE/IEC/ANSI C63.19-2011)
DASY Configuration:
Probe: EX3DV4 - SN3825; ConvF(7.94, 7.94, 7.94); Calibrated: 2014/12/16;
Sensor-Surface: 2mm (Mechanical Surface Detection)
Electronics: DAE4 Sn509; Calibrated: 2014/07/28
Phantom: ELI v4.0 (20deg probe tilt); Type: QDOVA001BB; Serial: TP:1045
DASY52 52.8.8(1222); SEMCAD X 14.6.10(7331)

Area Scan (71x121x1): Interpolated grid: dx=1.200 mm, dy=1.200 mm
Maximum value of SAR (interpolated) = 1.14 W/kg

Zoom Scan (7x7x7)/Cube 0: Measurement grid: dx=5mm, dy=5mm, dz=5mm
Reference Value = 28.33 V/m; Power Drift = -0.02 dB
Peak SAR (extrapolated) = 1.36 W/kg
SAR(1 g) = 0.798 W/kg; SAR(10 g) = 0.427 W/kg
Maximum value of SAR (measured) = 1.12 W/kg
Date: 2015/01/29
Ambient Temp. : 24.0 degree.C. Liquid Temp.; 23.5 degree.C.

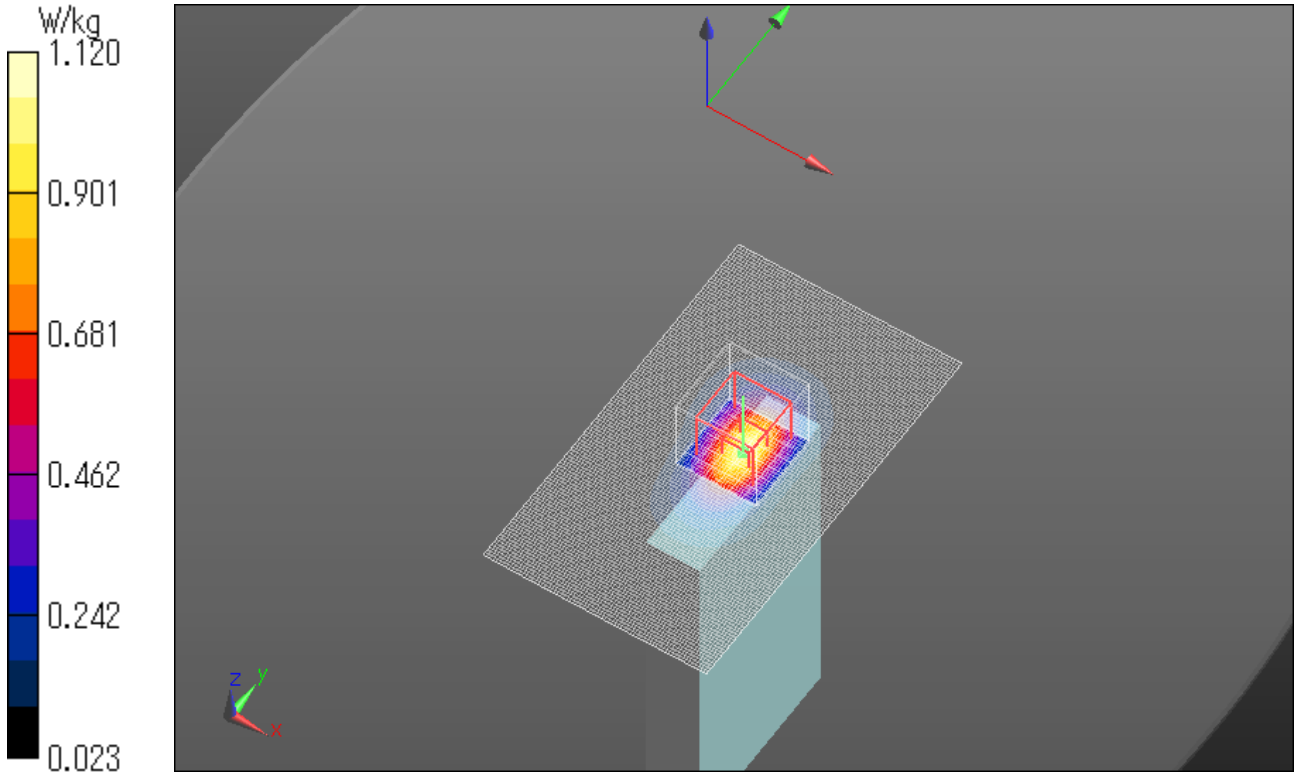

WCDMA IV RMC 12.2kbps 1732.6MHz Left side 10mm
Communication System: UID 0, WCDMA (0); Communication System Band: Band IV; Frequency: 1732.6 MHz;Duty Cycle: 1:1
Medium parameters used: f = 1733 MHz; σ = 1.415 S/m; ε_r = 51.592; ρ = 1000 kg/m^3
Phantom section: Flat Section
Measurement Standard: DASY5 (IEEE/IEC/ANSI C63.19-2011)
DASY Configuration:
Probe: EX3DV4 - SN3825; ConvF(7.94, 7.94, 7.94); Calibrated: 2014/12/16;
Sensor-Surface: 2mm (Mechanical Surface Detection)
Electronics: DAE4 Sn509; Calibrated: 2014/07/28
Phantom: ELI v4.0 (20deg probe tilt); Type: QDOVA001BB; Serial: TP:1045
DASY52 52.8.8(1222); SEMCAD X 14.6.10(7331)

Area Scan (71x151x1): Interpolated grid: dx=1.200 mm, dy=1.200 mm
Maximum value of SAR (interpolated) = 0.153 W/kg

Zoom Scan (7x7x7)/Cube 0: Measurement grid: dx=5mm, dy=5mm, dz=5mm
Reference Value = 10.47 V/m; Power Drift = 0.03 dB
Peak SAR (extrapolated) = 0.181 W/kg
SAR(1 g) = 0.112 W/kg; SAR(10 g) = 0.063 W/kg
Maximum value of SAR (measured) = 0.150 W/kg
Date: 2015/01/29
Ambient Temp. : 24.0 degree.C. Liquid Temp.; 23.5 degree.C.

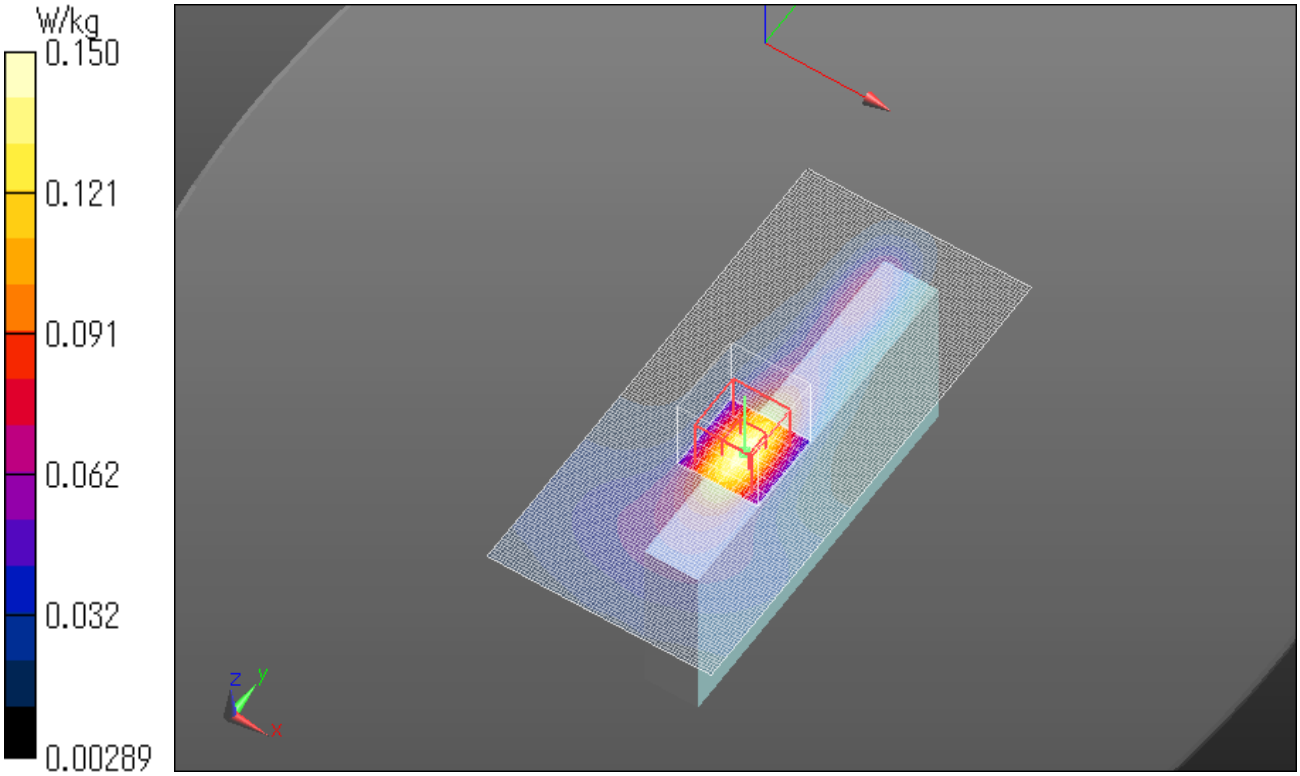

WCDMA IV RMC 12.2kbps 1732.6MHz Right side 10mm
Communication System: UID 0, WCDMA (0); Communication System Band: Band IV; Frequency: 1732.6 MHz;Duty Cycle: 1:1
Medium parameters used: f = 1733 MHz; σ = 1.415 S/m; ε_r = 51.592; ρ = 1000 kg/m^3
Phantom section: Flat Section
Measurement Standard: DASY5 (IEEE/IEC/ANSI C63.19-2011)
DASY Configuration:
Probe: EX3DV4 - SN3825; ConvF(7.94, 7.94, 7.94); Calibrated: 2014/12/16;
Sensor-Surface: 2mm (Mechanical Surface Detection)
Electronics: DAE4 Sn509; Calibrated: 2014/07/28
Phantom: ELI v4.0 (20deg probe tilt); Type: QDOVA001BB; Serial: TP:1045
DASY52 52.8.8(1222); SEMCAD X 14.6.10(7331)

Area Scan (71x151x1): Interpolated grid: dx=1.200 mm, dy=1.200 mm
Maximum value of SAR (interpolated) = 0.193 W/kg

Zoom Scan (7x7x7)/Cube 0: Measurement grid: dx=5mm, dy=5mm, dz=5mm
Reference Value = 11.87 V/m; Power Drift = -0.03 dB
Peak SAR (extrapolated) = 0.233 W/kg
SAR(1 g) = 0.144 W/kg; SAR(10 g) = 0.082 W/kg
Maximum value of SAR (measured) = 0.193 W/kg
Date: 2015/01/29
Ambient Temp. : 24.0 degree.C. Liquid Temp.; 23.5 degree.C.

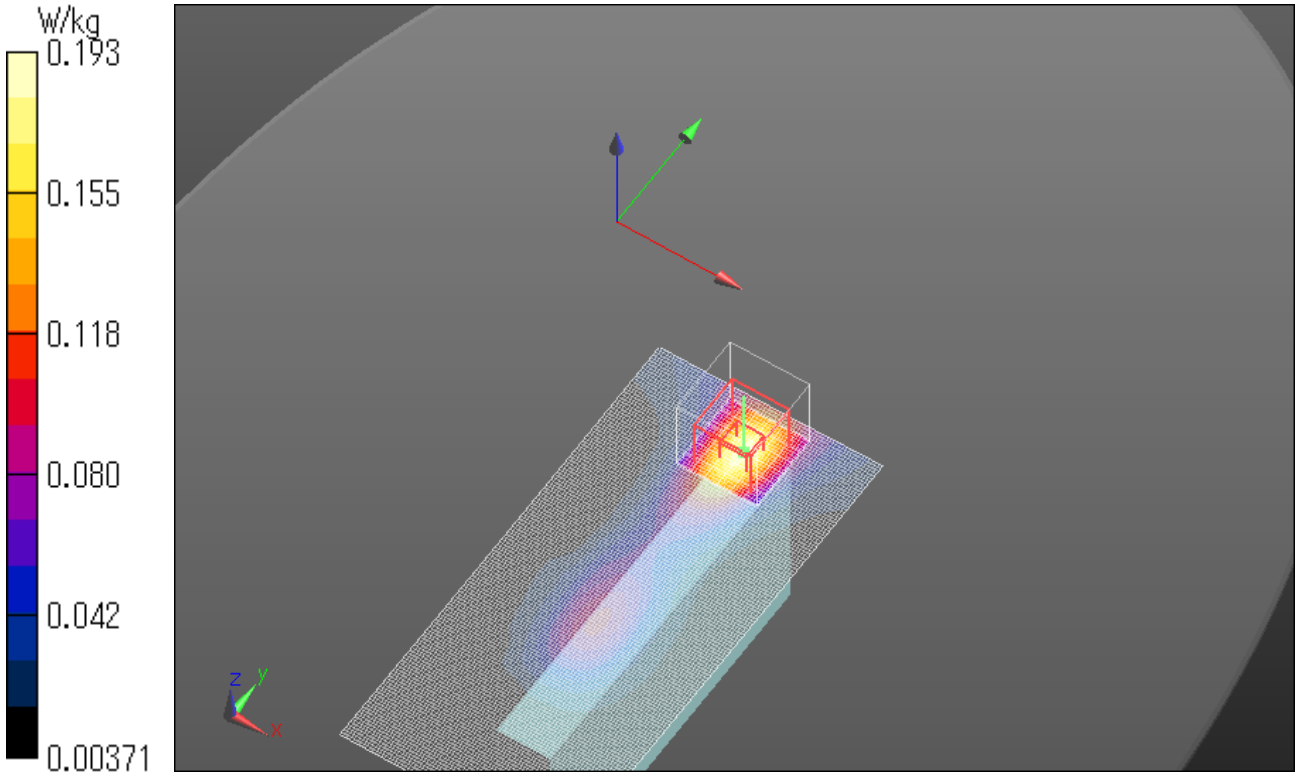

WCDMA IV RMC 12.2kbps 1712.4MHz Front side 10mm
Communication System: UID 0, WCDMA (0); Communication System Band: Band IV; Frequency: 1712.4 MHz;Duty Cycle: 1:1
Medium parameters used (interpolated): f = 1712.4 MHz; σ = 1.404 S/m; ε_r = 51.62; ρ = 1000 kg/m^3
Phantom section: Flat Section
Measurement Standard: DASY5 (IEEE/IEC/ANSI C63.19-2011)
DASY Configuration:
Probe: EX3DV4 - SN3825; ConvF(7.94, 7.94, 7.94); Calibrated: 2014/12/16;
Sensor-Surface: 2mm (Mechanical Surface Detection)
Electronics: DAE4 Sn509; Calibrated: 2014/07/28
Phantom: ELI v4.0 (20deg probe tilt); Type: QDOVA001BB; Serial: TP:1045
DASY52 52.8.8(1222); SEMCAD X 14.6.10(7331)
Area Scan 3 (71x121x1): Interpolated grid: dx=1.200 mm, dy=1.200 mm
Maximum value of SAR (interpolated) = 1.02 W/kg
Zoom Scan (7x7x7)/Cube 0: Measurement grid: dx=5mm, dy=5mm, dz=5mm
Reference Value = 27.45 V/m; Power Drift = -0.01 dB
Peak SAR (extrapolated) = 1.24 W/kg
SAR(1 g) = 0.761 W/kg; SAR(10 g) = 0.442 W/kg
Maximum value of SAR (measured) = 1.02 W/kg
Zoom Scan 2 (7x7x7)/Cube 0: Measurement grid: dx=5mm, dy=5mm, dz=5mm
Reference Value = 27.45 V/m; Power Drift = -0.01 dB
Peak SAR (extrapolated) = 1.22 W/kg
SAR(1 g) = 0.657 W/kg; SAR(10 g) = 0.355 W/kg

Maximum value of SAR (measured) = 0.962 W/kg
Date: 2015/01/29
Ambient Temp. : 24.0 degree.C. Liquid Temp.; 23.5 degree.C.

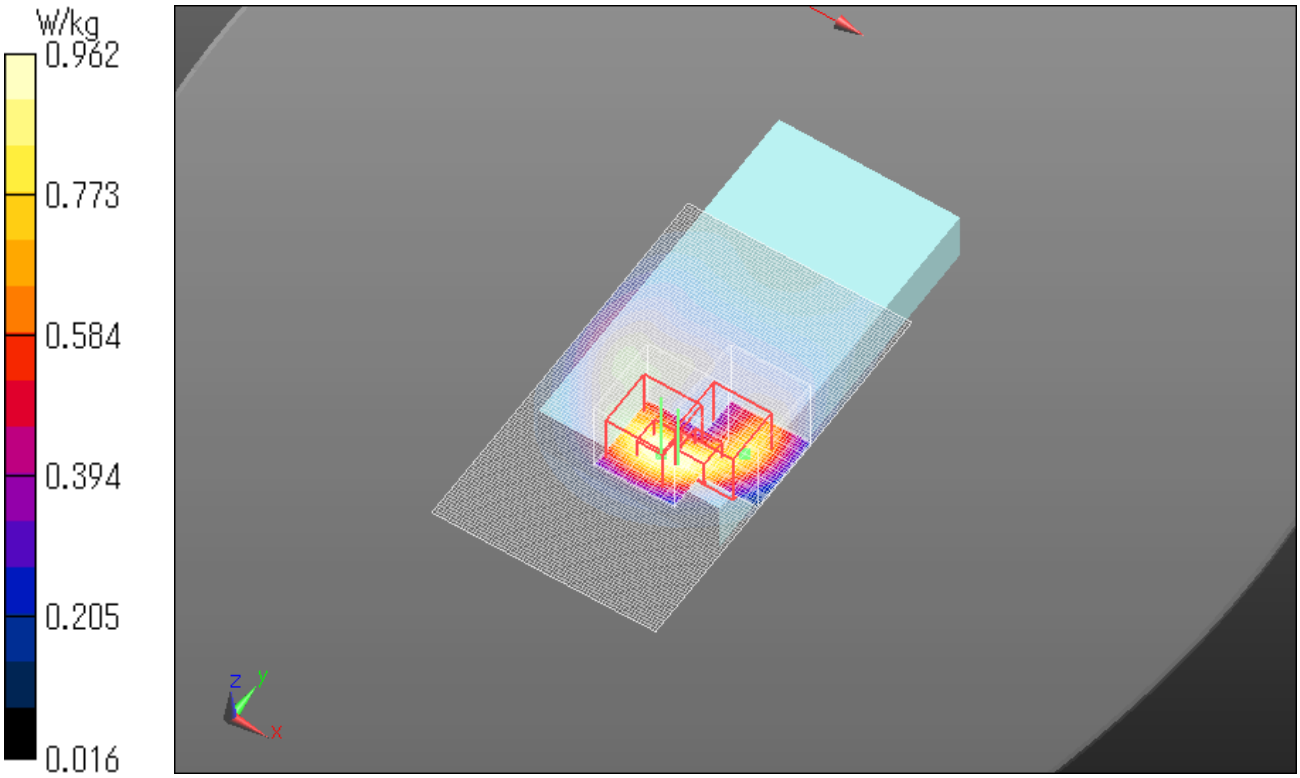

WCDMA IV RMC 12.2kbps 1752.6MHz Front side 10mm
Communication System: UID 0, WCDMA (0); Communication System Band: Band IV; Frequency: 1752.6 MHz;Duty Cycle: 1:1
Medium parameters used: f = 1753 MHz; σ = 1.447 S/m; ε_r = 51.517; ρ = 1000 kg/m^3
Phantom section: Flat Section
Measurement Standard: DASY5 (IEEE/IEC/ANSI C63.19-2011)
DASY Configuration:
Probe: EX3DV4 - SN3825; ConvF(7.94, 7.94, 7.94); Calibrated: 2014/12/16;
Sensor-Surface: 2mm (Mechanical Surface Detection)
Electronics: DAE4 Sn509; Calibrated: 2014/07/28
Phantom: ELI v4.0 (20deg probe tilt); Type: QDOVA001BB; Serial: TP:1045
DASY52 52.8.8(1222); SEMCAD X 14.6.10(7331)

Area Scan 3 (71x121x1): Interpolated grid: dx=1.200 mm, dy=1.200 mm
Maximum value of SAR (interpolated) = 1.10 W/kg

Zoom Scan (7x7x7)/Cube 0: Measurement grid: dx=5mm, dy=5mm, dz=5mm
Reference Value = 27.89 V/m; Power Drift = 0.14 dB
Peak SAR (extrapolated) = 1.34 W/kg
SAR(1 g) = 0.830 W/kg; SAR(10 g) = 0.477 W/kg
Maximum value of SAR (measured) = 1.11 W/kg

Zoom Scan 2 (7x7x7)/Cube 0: Measurement grid: dx=5mm, dy=5mm, dz=5mm
Reference Value = 27.89 V/m; Power Drift = 0.14 dB
Peak SAR (extrapolated) = 1.29 W/kg
SAR(1 g) = 0.689 W/kg; SAR(10 g) = 0.346 W/kg

Maximum value of SAR (measured) = 1.05 W/kg
Date: 2015/01/29
Ambient Temp. : 24.0 degree.C. Liquid Temp.; 23.5 degree.C.

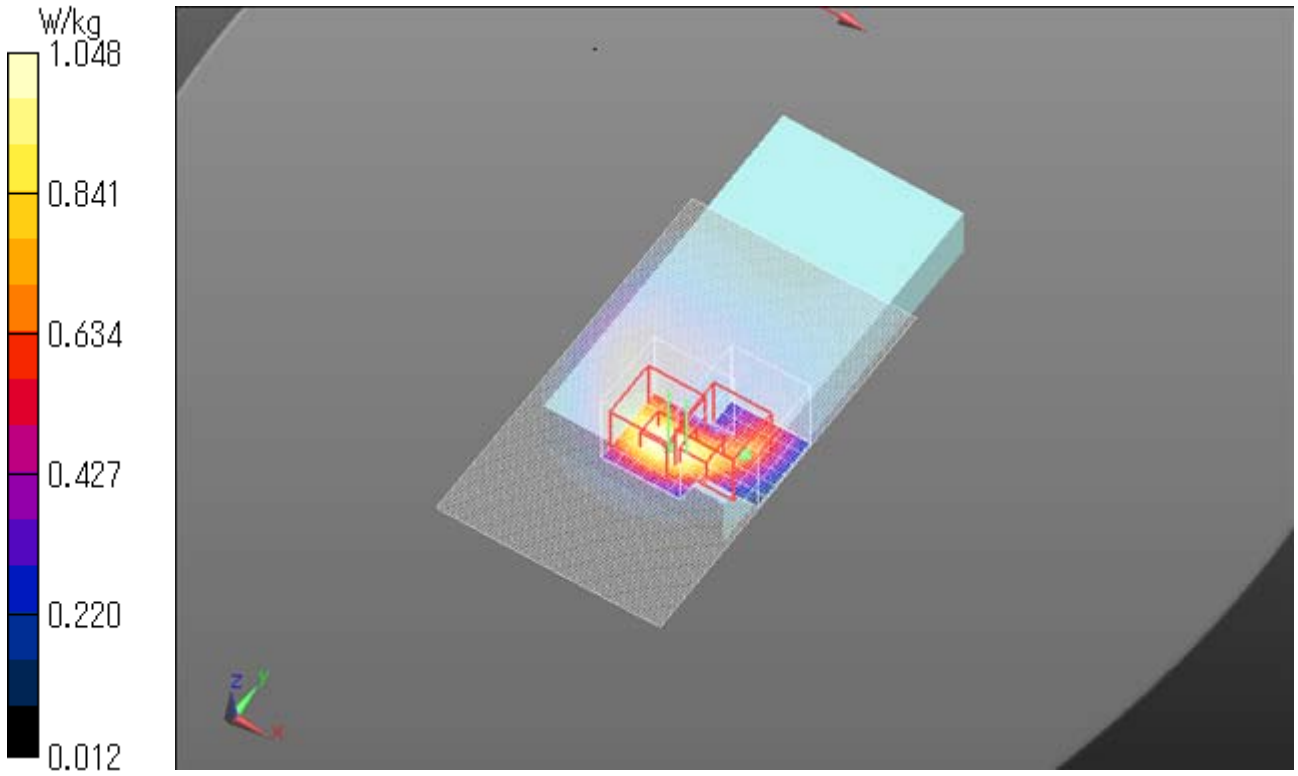

WCDMA IV RMC 12.2kbps 1712.4MHz Rear side 10mm
Communication System: UID 0, WCDMA (0); Communication System Band: Band IV; Frequency: 1712.4 MHz;Duty Cycle: 1:1
Medium parameters used (interpolated): f = 1712.4 MHz; σ = 1.404 S/m; ε_r = 51.62; ρ = 1000 kg/m^3
Phantom section: Flat Section
Measurement Standard: DASY5 (IEEE/IEC/ANSI C63.19-2011)
DASY Configuration:
Probe: EX3DV4 - SN3825; ConvF(7.94, 7.94, 7.94); Calibrated: 2014/12/16;
Sensor-Surface: 2mm (Mechanical Surface Detection)
Electronics: DAE4 Sn509; Calibrated: 2014/07/28
Phantom: ELI v4.0 (20deg probe tilt); Type: QDOVA001BB; Serial: TP:1045
DASY52 52.8.8(1222); SEMCAD X 14.6.10(7331)

Area Scan (71x101x1): Interpolated grid: dx=1.200 mm, dy=1.200 mm

Maximum value of SAR (interpolated) = 1.26 W/kg

Zoom Scan (7x7x7)/Cube 0: Measurement grid: dx=5mm, dy=5mm, dz=5mm
Reference Value = 30.34 V/m; Power Drift = -0.01 dB
Peak SAR (extrapolated) = 1.49 W/kg
SAR(1 g) = 0.944 W/kg; SAR(10 g) = 0.544 W/kg

Maximum value of SAR (measured) = 1.25 W/kg
Date: 2015/01/29
Ambient Temp. : 24.0 degree.C. Liquid Temp.; 23.5 degree.C.

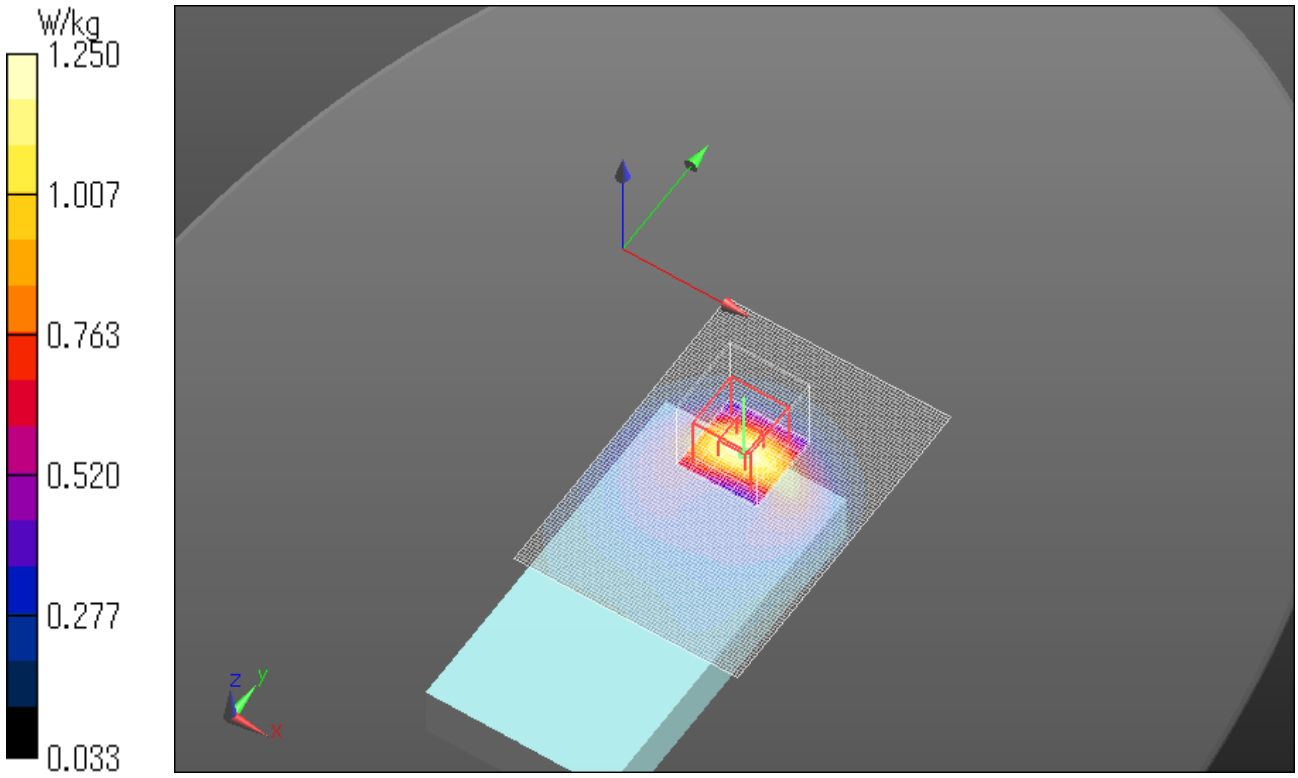

WCDMA IV RMC 12.2kbps 1752.6MHz Rear side 10mm
Communication System: UID 0, WCDMA (0); Communication System Band: Band IV; Frequency: 1752.6 MHz;Duty Cycle: 1:1
Medium parameters used: f = 1753 MHz; σ = 1.447 S/m; ε_r = 51.517; ρ = 1000 kg/m^3
Phantom section: Flat Section
Measurement Standard: DASY5 (IEEE/IEC/ANSI C63.19-2011)
DASY Configuration:
Probe: EX3DV4 - SN3825; ConvF(7.94, 7.94, 7.94); Calibrated: 2014/12/16;
Sensor-Surface: 2mm (Mechanical Surface Detection)
Electronics: DAE4 Sn509; Calibrated: 2014/07/28
Phantom: ELI v4.0 (20deg probe tilt); Type: QDOVA001BB; Serial: TP:1045
DASY52 52.8.8(1222); SEMCAD X 14.6.10(7331)

Area Scan (71x101x1): Interpolated grid: dx=1.200 mm, dy=1.200 mm
Maximum value of SAR (interpolated) = 1.25 W/kg

Zoom Scan (7x7x7)/Cube 0: Measurement grid: dx=5mm, dy=5mm, dz=5mm
Reference Value = 29.88 V/m; Power Drift = -0.04 dB
Peak SAR (extrapolated) = 1.50 W/kg
SAR(1 g) = 0.937 W/kg; SAR(10 g) = 0.534 W/kg
Maximum value of SAR (measured) = 1.25 W/kg
Date: 2015/01/29
Ambient Temp. : 24.0 degree.C. Liquid Temp.; 23.5 degree.C.

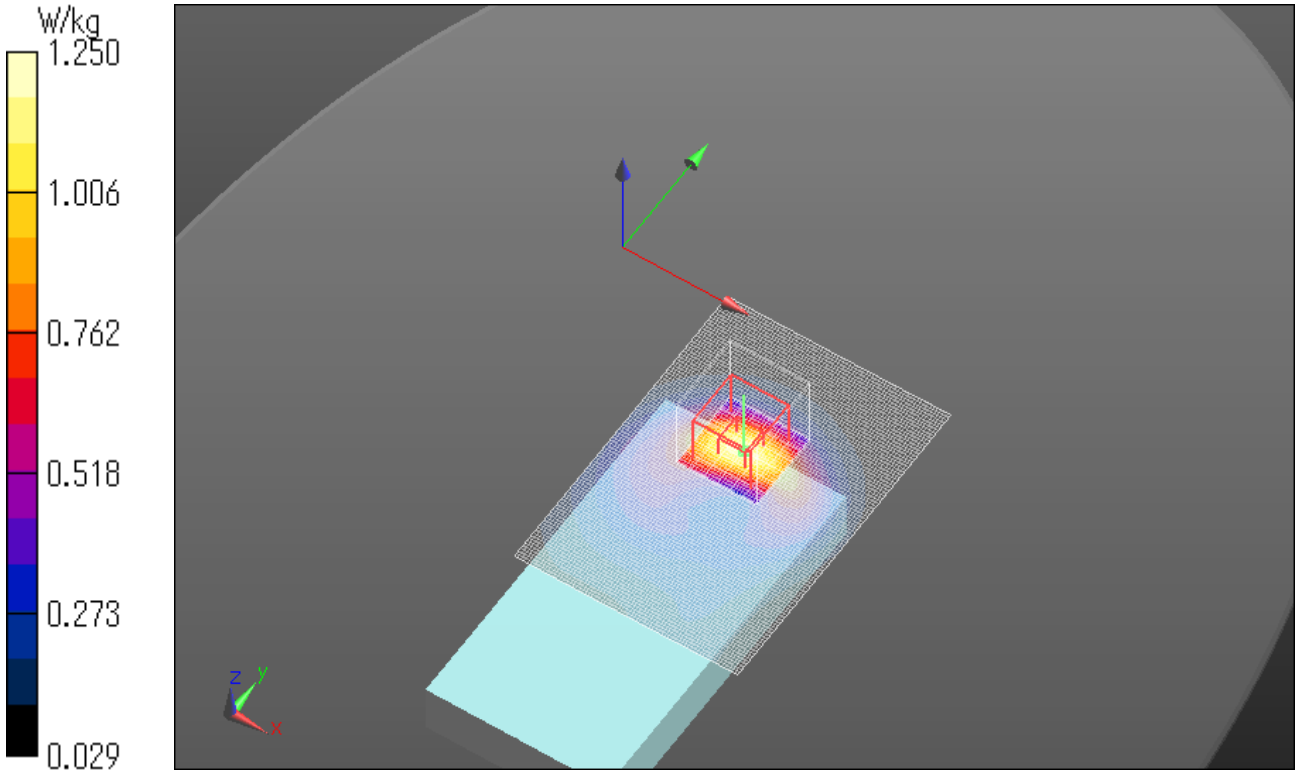

WCDMA IV RMC 12.2kbps 1712.4MHz Bottom side 10mm
Communication System: UID 0, WCDMA (0); Communication System Band: Band IV; Frequency: 1712.4 MHz;Duty Cycle: 1:1
Medium parameters used (interpolated): f = 1712.4 MHz; σ = 1.404 S/m; ε_r = 51.62; ρ = 1000 kg/m^3
Phantom section: Flat Section
Measurement Standard: DASY5 (IEEE/IEC/ANSI C63.19-2011)
DASY Configuration:
Probe: EX3DV4 - SN3825; ConvF(7.94, 7.94, 7.94); Calibrated: 2014/12/16;
Sensor-Surface: 2mm (Mechanical Surface Detection)
Electronics: DAE4 Sn509; Calibrated: 2014/07/28
Phantom: ELI v4.0 (20deg probe tilt); Type: QDOVA001BB; Serial: TP:1045
DASY52 52.8.8(1222); SEMCAD X 14.6.10(7331)

Area Scan (71x121x1): Interpolated grid: dx=1.200 mm, dy=1.200 mm

Maximum value of SAR (interpolated) = 1.22 W/kg

Zoom Scan (7x7x7)/Cube 0: Measurement grid: dx=5mm, dy=5mm, dz=5mm
Reference Value = 29.24 V/m; Power Drift = -0.02 dB
Peak SAR (extrapolated) = 1.42 W/kg
SAR(1 g) = 0.832 W/kg; SAR(10 g) = 0.445 W/kg

Maximum value of SAR (measured) = 1.16 W/kg
Date: 2015/01/29
Ambient Temp. : 24.0 degree.C. Liquid Temp.; 23.5 degree.C.

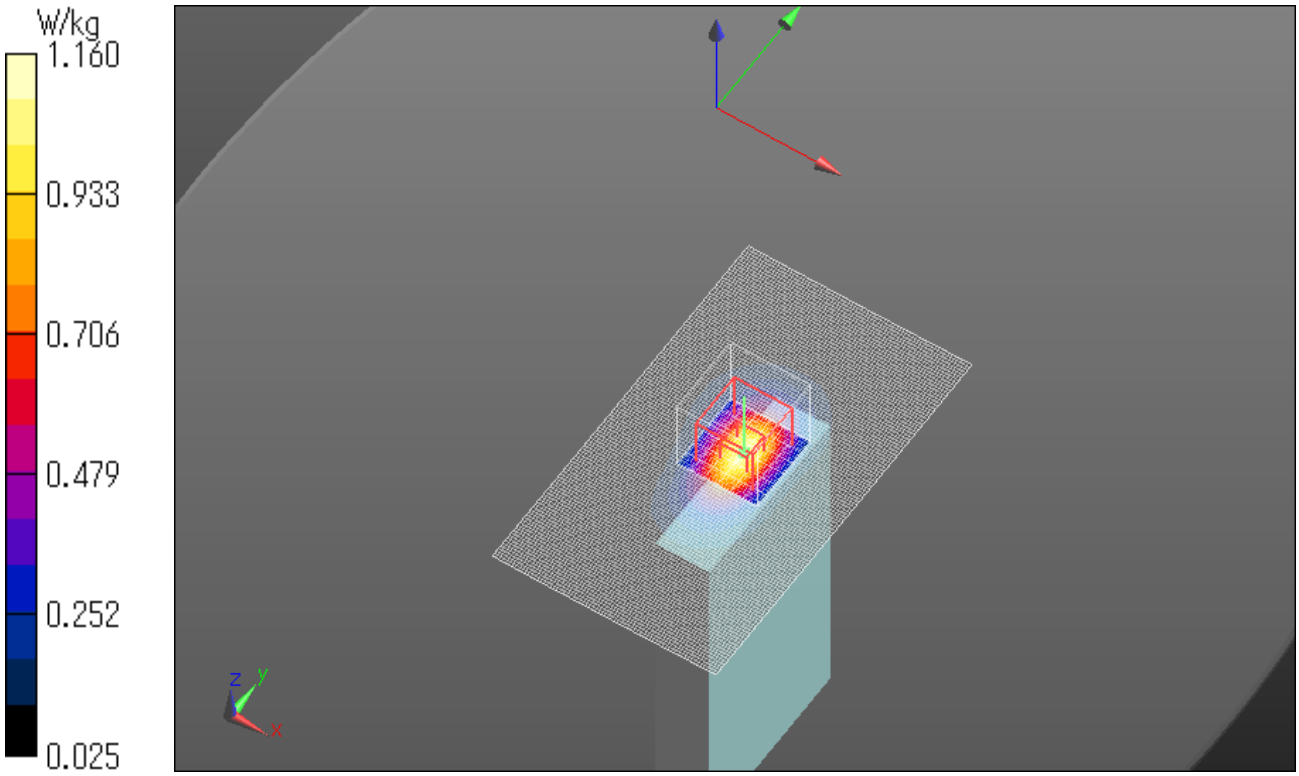

WCDMA IV RMC 12.2kbps 1752.6MHz Bottom side 10mmg
Communication System: UID 0, WCDMA (0); Communication System Band: Band IV; Frequency: 1752.6 MHz;Duty Cycle: 1:1
Medium parameters used: f = 1753 MHz; σ = 1.447 S/m; ε_r = 51.517; ρ = 1000 kg/m^3
Phantom section: Flat Section
Measurement Standard: DASY5 (IEEE/IEC/ANSI C63.19-2011)
DASY Configuration:
Probe: EX3DV4 - SN3825; ConvF(7.94, 7.94, 7.94); Calibrated: 2014/12/16;
Sensor-Surface: 2mm (Mechanical Surface Detection)
Electronics: DAE4 Sn509; Calibrated: 2014/07/28
Phantom: ELI v4.0 (20deg probe tilt); Type: QDOVA001BB; Serial: TP:1045
DASY52 52.8.8(1222); SEMCAD X 14.6.10(7331)

Area Scan (71x121x1): Interpolated grid: dx=1.200 mm, dy=1.200 mm
Maximum value of SAR (interpolated) = 1.18 W/kg

Zoom Scan (7x7x7)/Cube 0: Measurement grid: dx=5mm, dy=5mm, dz=5mm
Reference Value = 28.46 V/m; Power Drift = -0.04 dB
Peak SAR (extrapolated) = 1.38 W/kg
SAR(1 g) = 0.807 W/kg; SAR(10 g) = 0.428 W/kg
Maximum value of SAR (measured) = 1.12 W/kg
Date: 2015/01/29
Ambient Temp. : 24.0 degree.C. Liquid Temp.; 23.5 degree.C.

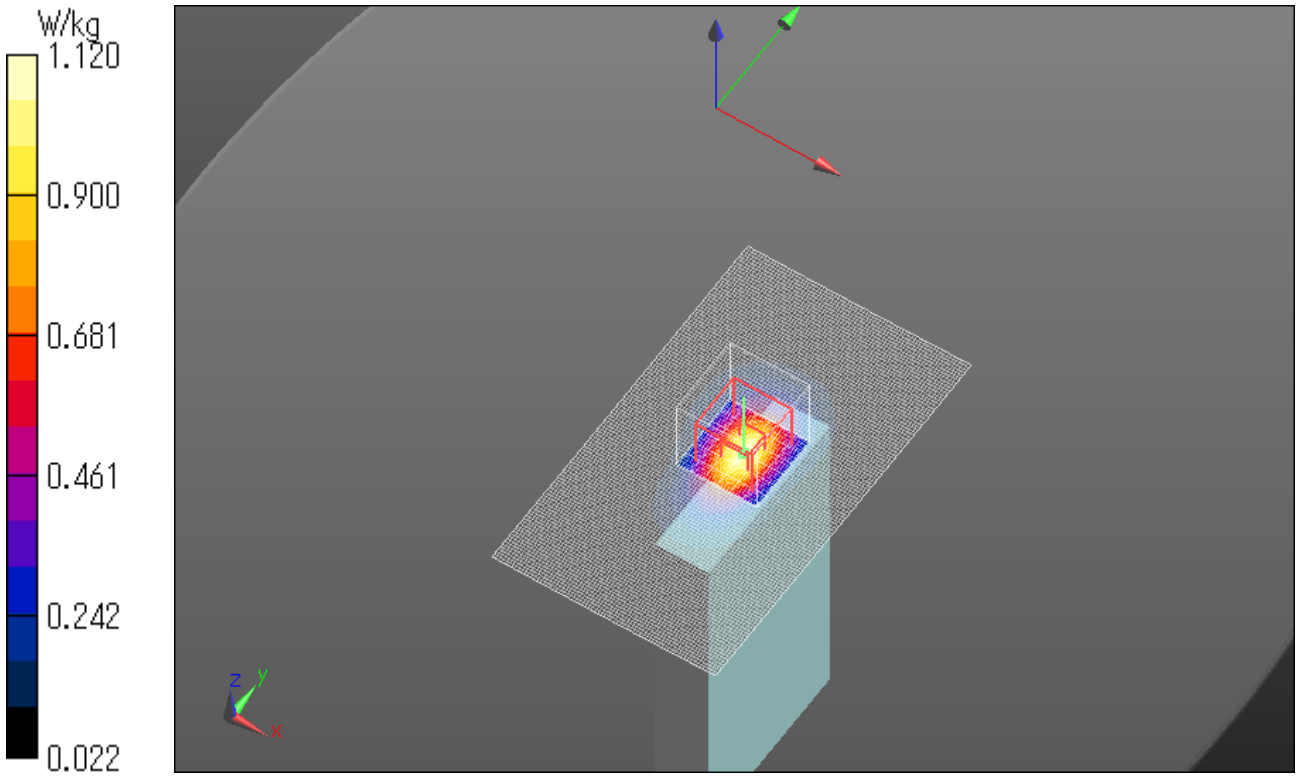

WCDMA IV RMC 12.2kbps 1732.6MHz Rear side 10mm -Repeat-
Communication System: UID 0, WCDMA (0); Communication System Band: Band IV; Frequency: 1732.6 MHz;Duty Cycle: 1:1
Medium parameters used: f = 1733 MHz; σ = 1.418 S/m; ε_r = 51.449; ρ = 1000 kg/m^3
Phantom section: Flat Section
Measurement Standard: DASY5 (IEEE/IEC/ANSI C63.19-2011)
DASY Configuration:
Probe: EX3DV4 - SN3825; ConvF(7.94, 7.94, 7.94); Calibrated: 2014/12/16;
Sensor-Surface: 2mm (Mechanical Surface Detection)
Electronics: DAE4 Sn509; Calibrated: 2014/07/28
Phantom: ELI v4.0 (20deg probe tilt); Type: QDOVA001BB; Serial: TP:1045
DASY52 52.8.8(1222); SEMCAD X 14.6.10(7331)

Area Scan (71x101x1): Interpolated grid: dx=1.200 mm, dy=1.200 mm
Maximum value of SAR (interpolated) = 1.30 W/kg

Zoom Scan (7x7x7)/Cube 0: Measurement grid: dx=5mm, dy=5mm, dz=5mm
Reference Value = 30.74 V/m; Power Drift = -0.01 dB
Peak SAR (extrapolated) = 1.56 W/kg
SAR(1 g) = 0.962 W/kg; SAR(10 g) = 0.555 W/kg
Maximum value of SAR (measured) = 1.30 W/kg

Date: 2015/02/03
Ambient Temp. : 24.0 degree.C. Liquid Temp.; 23.5 degree.C.

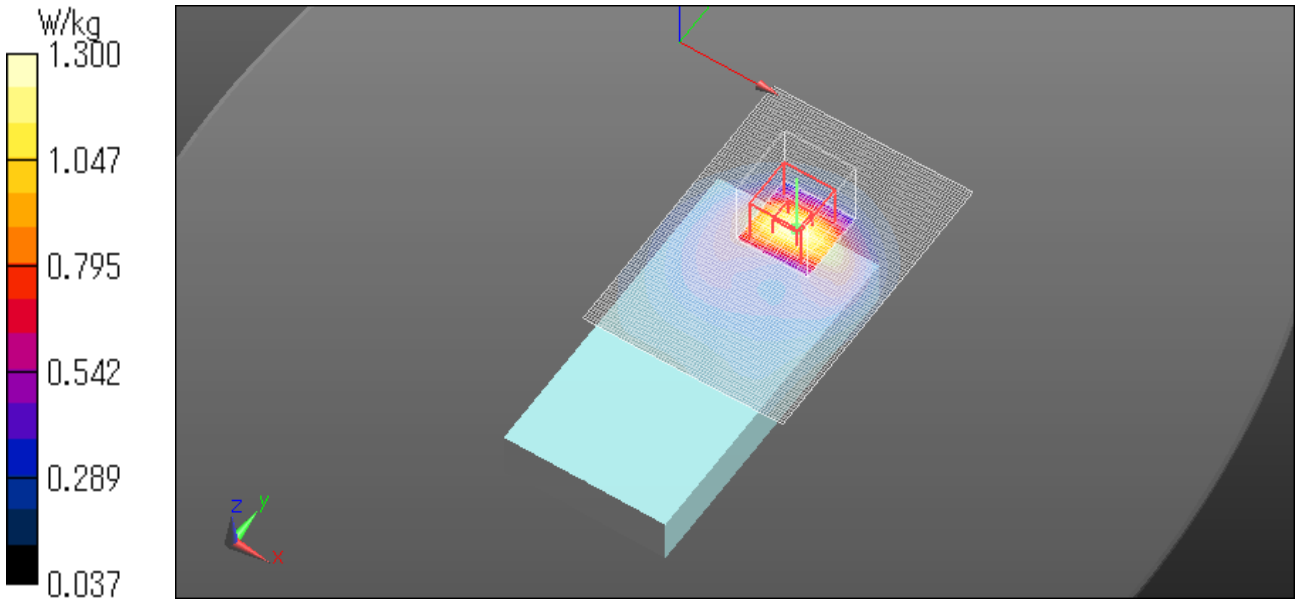

9. WCDMA Band V Head

WCDMA V RMC 12.2kbps 836.6MHz Left cheek
Communication System: UID 0, WCDMA (0); Communication System Band: Band V; Frequency: 836.6 MHz;Duty Cycle: 1:1
Medium parameters used: f = 837 MHz; σ = 0.935 S/m; εr = 43.002; ρ = 1000 kg/m^3
Phantom section: Left Section
Measurement Standard: DASY5 (IEEE/IEC/ANSI C63.19-2011)
DASY Configuration:
Probe: EX3DV4 - SN3825; ConvF(9.77, 9.77, 9.77); Calibrated: 2014/12/16;
Sensor-Surface: 2mm (Mechanical Surface Detection)
Electronics: DAE4 Sn509; Calibrated: 2014/07/28
Phantom: SAM (30deg probe tilt) with CRP v4.0; Type: QD000P40CB; Serial: TP:1333
DASY52 52.8.8(1222); SEMCAD X 14.6.10(7331)

Area Scan 2 2 (61x81x1): Interpolated grid: dx=1.500 mm, dy=1.500 mm
Maximum value of SAR (interpolated) = 0.334 W/kg

Zoom Scan 2 (7x7x7)/Cube 0: Measurement grid: dx=5mm, dy=5mm, dz=5mm
Reference Value = 4.414 V/m; Power Drift = -0.13 dB
Peak SAR (extrapolated) = 0.362 W/kg
SAR(1 g) = 0.280 W/kg; SAR(10 g) = 0.200 W/kg

Date: 2015/01/17
Ambient Temp. : 24.0 degree.C. Liquid Temp.; 23.5 degree.C.

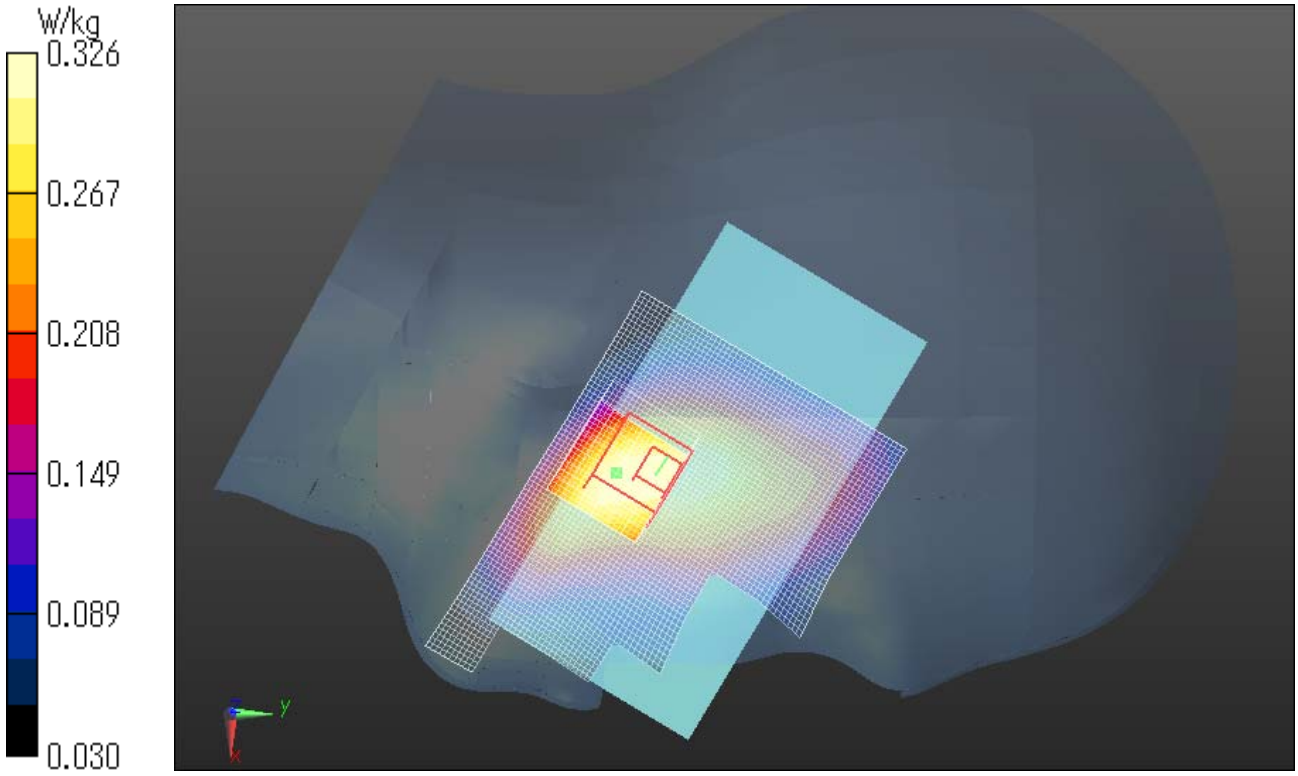

WCDMA V RMC 12.2kbps 836.6MHz Left tilt
Communication System: UID 0, WCDMA (0); Communication System Band: Band V; Frequency: 836.6 MHz;Duty Cycle: 1:1
Medium parameters used: f = 837 MHz; σ = 0.935 S/m; εr = 43.002; ρ = 1000 kg/m^3
Phantom section: Left Section
Measurement Standard: DASY5 (IEEE/IEC/ANSI C63.19-2011)
DASY Configuration:
Probe: EX3DV4 - SN3825; ConvF(9.77, 9.77, 9.77); Calibrated: 2014/12/16;
Sensor-Surface: 2mm (Mechanical Surface Detection)
Electronics: DAE4 Sn509; Calibrated: 2014/07/28
Phantom: SAM (30deg probe tilt) with CRP v4.0; Type: QD000P40CB; Serial: TP:1333
DASY52 52.8.8(1222); SEMCAD X 14.6.10(7331)

Area Scan 2 2 (61x81x1): Interpolated grid: dx=1.500 mm, dy=1.500 mm
Maximum value of SAR (interpolated) = 0.208 W/kg

Zoom Scan 2 (7x7x7)/Cube 0: Measurement grid: dx=5mm, dy=5mm, dz=5mm
Reference Value = 9.489 V/m; Power Drift = 0.03 dB
Peak SAR (extrapolated) = 0.229 W/kg
SAR(1 g) = 0.182 W/kg; SAR(10 g) = 0.141 W/kg

Maximum value of SAR (measured) = 0.209 W/kg

Date: 2015/01/17
Ambient Temp. : 24.0 degree.C. Liquid Temp.; 23.5 degree.C.

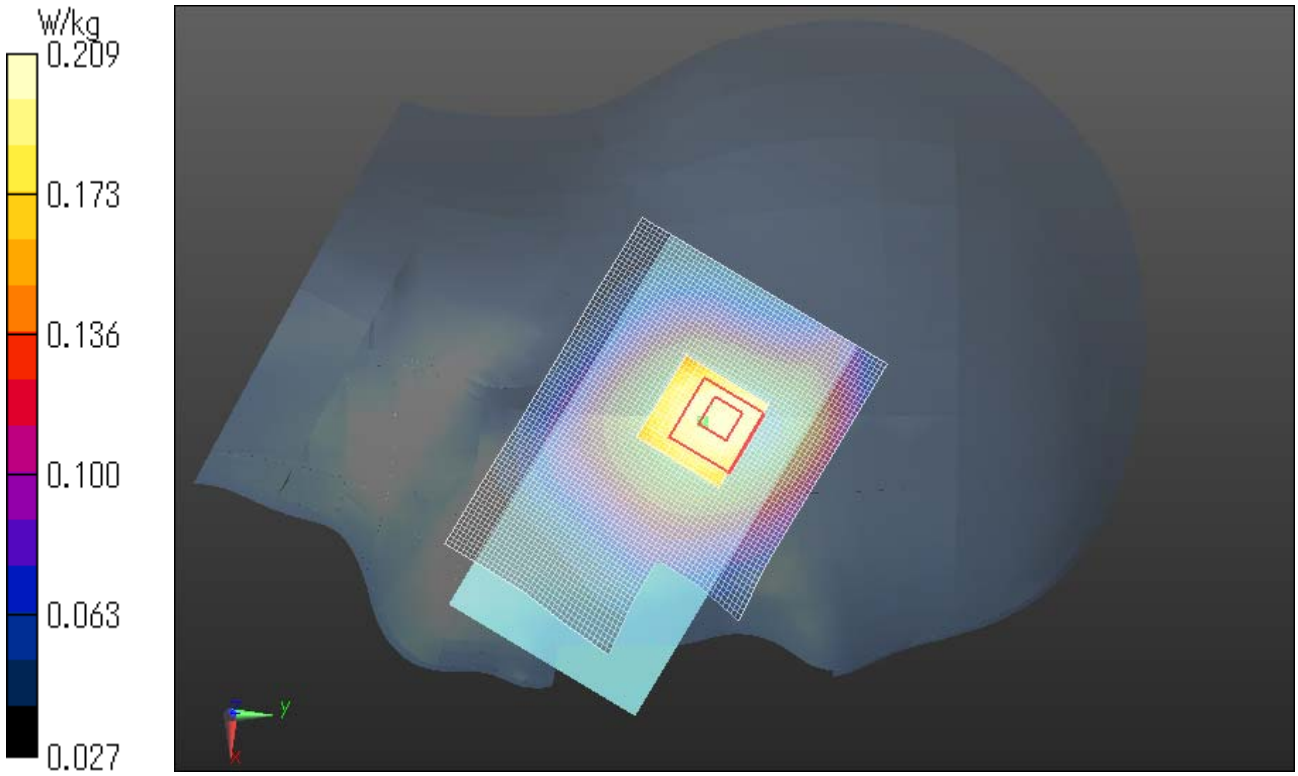

WCDMA V RMC 12.2kbps 836.6MHz Right cheek
Communication System: UID 0, WCDMA (0); Communication System Band: Band V; Frequency: 836.6 MHz;Duty Cycle: 1:1
Medium parameters used: f = 837 MHz; σ = 0.935 S/m; εr = 43.002; ρ = 1000 kg/m^3
Phantom section: Right Section
Measurement Standard: DASY5 (IEEE/IEC/ANSI C63.19-2011)
DASY Configuration:
Probe: EX3DV4 - SN3825; ConvF(9.77, 9.77, 9.77); Calibrated: 2014/12/16;
Sensor-Surface: 2mm (Mechanical Surface Detection)
Electronics: DAE4 Sn509; Calibrated: 2014/07/28
Phantom: SAM (30deg probe tilt) with CRP v4.0; Type: QD000P40CB; Serial: TP:1333
DASY52 52.8.8(1222); SEMCAD X 14.6.10(7331)

Area Scan 2 2 2 (61x81x1): Interpolated grid: dx=1.500 mm, dy=1.500 mm
Maximum value of SAR (interpolated) = 0.368 W/kg

Zoom Scan (8x7x7)/Cube 0: Measurement grid: dx=5mm, dy=5mm, dz=5mm
Reference Value = 6.392 V/m; Power Drift = -0.06 dB
Peak SAR (extrapolated) = 0.396 W/kg
SAR(1 g) = 0.327 W/kg; SAR(10 g) = 0.252 W/kg
Maximum value of SAR (measured) = 0.367 W/kg

Date: 2015/01/17
Ambient Temp. : 24.0 degree.C. Liquid Temp.; 23.5 degree.C.

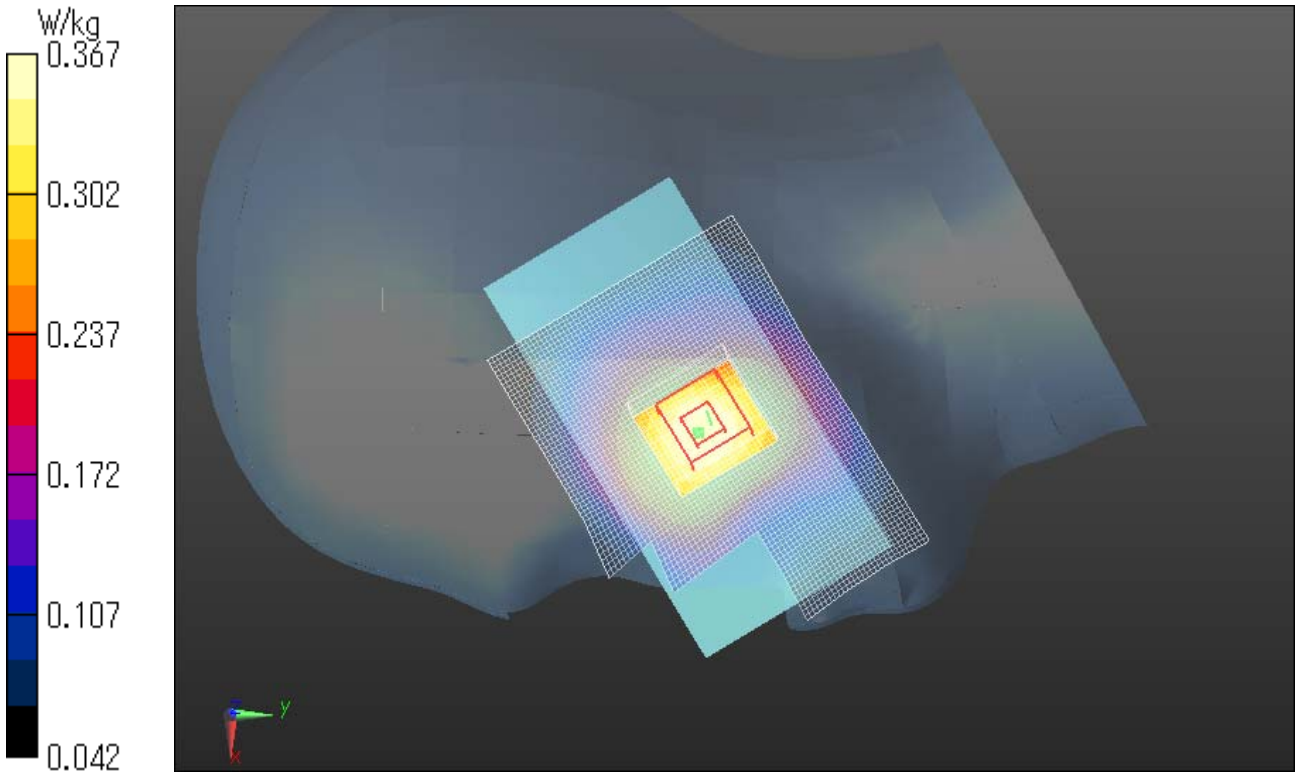

WCDMA V RMC 12.2kbps 836.6MHz Right tilt
Communication System: UID 0, WCDMA (0); Communication System Band: Band V; Frequency: 836.6 MHz;Duty Cycle: 1:1
Medium parameters used: f = 837 MHz; σ = 0.935 S/m; εr = 43.002; ρ = 1000 kg/m^3
Phantom section: Right Section
Measurement Standard: DASY5 (IEEE/IEC/ANSI C63.19-2011)
DASY Configuration:
Probe: EX3DV4 - SN3825; ConvF(9.77, 9.77, 9.77); Calibrated: 2014/12/16;
Sensor-Surface: 2mm (Mechanical Surface Detection)
Electronics: DAE4 Sn509; Calibrated: 2014/07/28
Phantom: SAM (30deg probe tilt) with CRP v4.0; Type: QD000P40CB; Serial: TP:1333
DASY52 52.8.8(1222); SEMCAD X 14.6.10(7331)

Area Scan 2 2 2 (61x81x1): Interpolated grid: dx=1.500 mm, dy=1.500 mm
Maximum value of SAR (interpolated) = 0.265 W/kg

Zoom Scan (8x8x7)/Cube 0: Measurement grid: dx=5mm, dy=5mm, dz=5mm
Reference Value = 11.61 V/m; Power Drift = -0.18 dB
Peak SAR (extrapolated) = 0.290 W/kg
SAR(1 g) = 0.229 W/kg; SAR(10 g) = 0.178 W/kg
Maximum value of SAR (measured) = 0.264 W/kg
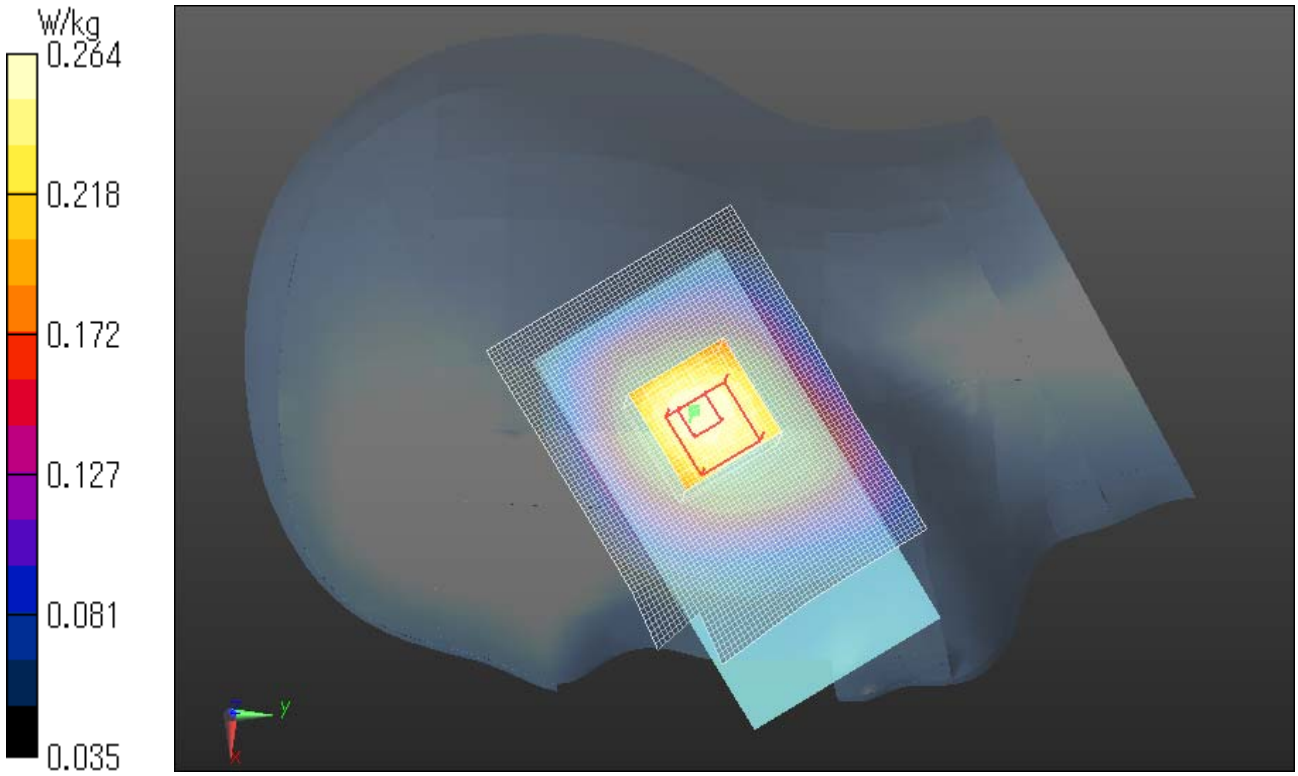
Date: 2015/01/17
Ambient Temp. : 24.0 degree.C. Liquid Temp.; 23.5 degree.C.