POWAKADDY

PowaKaddy International Ltd
Sittingbourne Industrial Park, Sittingbourne
Kent ME10 3JH England
Tel: (01795) 473555 Fax: (01795) 474586
E-mail: sales@powakaddy.com
Website: www.powakaddy.com

The PGA EUROPE
OFFICIAL CART SUPPLIER

POWAKADDY

OWNERS INSTRUCTION MANUAL

RoboKaddy

This device complies with Part 15 of the FCC Rules. Operation is subject to the following two conditions:

1. This device may not cause harmful interference,

   and

2. This device must accept any interference received, including interference that may cause undesired operation.

This machine is designed solely for the transportation of golf equipment on a golf course.

Changes or modifications not expressly approved by Powakaddy Limited could void the users authority to operate the equipment.

Index

Page 1	Assembly.
Page 3	Handset information
Page 5	RoboKaddy hints and tips.
Page 6	Special Features.
Page 7	Straight line running.
Page 8	Questions and Answers.
Page 9	Trouble Shooting.
Page 11	Remote Control Detail.
Page 12	Maintenance.
Page 13	Complete Guide to Battery and Charger Care.

Assembly

Thank you for purchasing a PowaKaddy RoboKaddy.

Your RoboKaddy is factory programmed and ready for use. However, please take time to read this manual and practice the various controls before your first game.

- Before you do anything else, please put your battery on charge for at least 24 hours to activate it. To do this, connect your charger to the battery with the special PowaKaddy Interconnect lead. Now plug the charger into the mains and leave for 24 hours to activate it.

- Meanwhile, take time to read this manual and learn about your exciting new purchase. For a “Quick Start” use the card inside the back cover of this guide.

- The PowaKaddy RoboKaddy compromises of a one piece machine that “snaps” into place in two easy moves, an antenna, handset, zero tip wheel, battery and charger.

- With the main section flat on the floor, stand behind the trolley, release the locking catch beneath the handle by sliding it forward as shown and pulling up on the main handle.

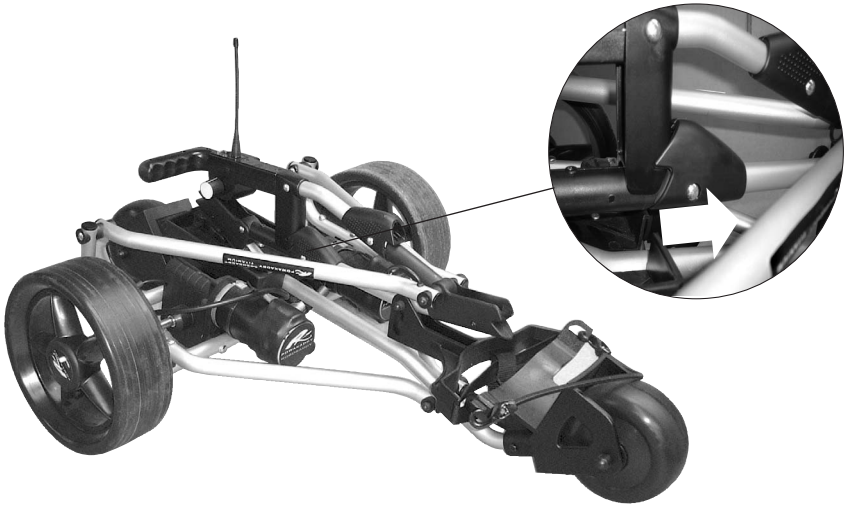

- As the handle reaches the “in use” position the mechanism will “click” and lock into place. Once locked in, lower the upper bag stay into position. Now fit the zero tip wheel by placing the wheel housing on the rear tube and pulling the plunger, allow the plunger to click into place.

- Screw the antenna into the screw terminal on the handle.

- Using the carry strap, carefully place a fully charged battery into the RoboKaddy battery tray with the lead connector facing the right hand side of the trolley.

NOTE: All of the RoboKaddy system LED’s will illuminate to produce a short “lamp test” when the battery is first connected.

Parts Identification

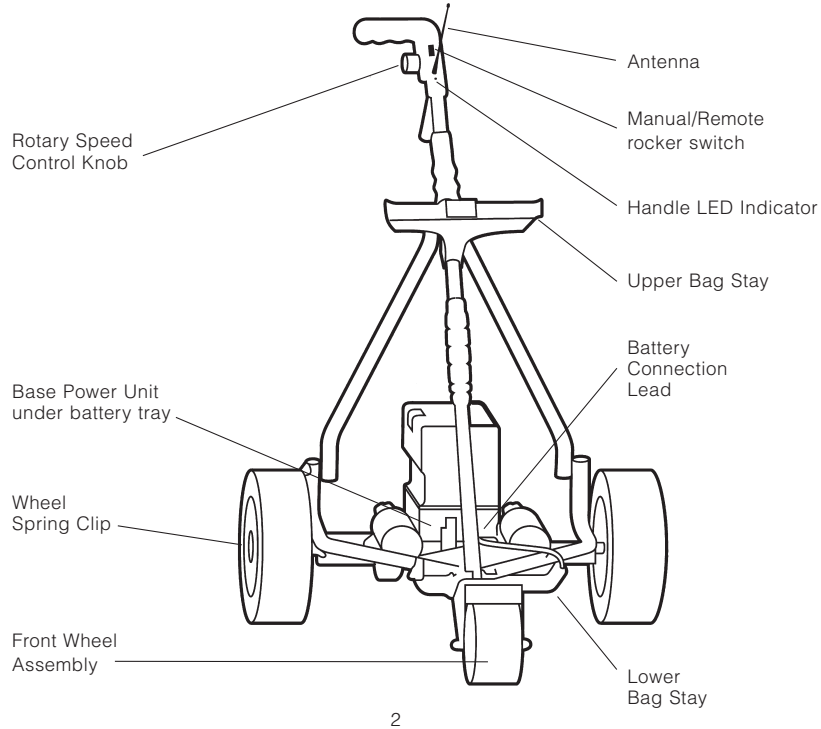

Transmitter Information

IMPORTANT
PRACTICE IN AN OPEN SPACE AWAY FROM OBSTRUCTIONS

Study your handset and learn the functions below. Later in this manual you will find some advanced features. The ones below, however, will get you started.

Connect the battery and push the Manual/Remote switch to Remote (I) the LED will switch from red to green. **NOTE:** If the battery is connected with the rotary speed control turned up the machine will remain stationary and the handle LED will flash red and green until enabled by first winding the rotary speed control back to zero.

Press this key once and the RoboKaddy will start to move in a forward direction. Keeping your finger on the key will take the RoboKaddy to maximum speed. As soon as you release your finger the RoboKaddy will continue at that speed.

Press this key to slow down your RoboKaddy. As soon as you release your finger the RoboKaddy will continue at that speed. Please note that this key will not stop the trolley, it will take it only to the slowest speed.

A gentle push of this key will turn the RoboKaddy left and then continue straight in the new direction. A prolonged push will result in a tighter turn. You may have to practice this to perfect it as load and surface will affect the turn.

To turn right, the procedure is exactly the same as described in “left arrow”. Ensure you practice both ways.

NOTE: By starting the machine with either the left or right keys the RoboKaddy will turn on the spot and stop as soon as you release your finger. This is ideal for getting out of a tight corner. Please be aware that should the machine hit any obstruction in this mode, you will need to help it out manually. Continuing to attempt the pirouette when the RoboKaddy is stuck will result in damage to your machine.

Brake Keys – There are two ways of stopping your RoboKaddy, for a gentle controlled stop press the off key . For an emergency stop, press the central emergency stop button .

Reverse – Reverse is achieved by pressing either the off or emergency stop keys and then pressing the minus key. Once in reverse you can steer left and right too. Reverse has only one preset speed. To go into forward mode, you must first press the off or emergency stop key.

To operate the machine manually, ensure the rotary control knob is at zero and turn the rocker switch to Manual (0), the red light on the handle will illuminate. By turning the rotary control switch forward the machine will speed up. You can now use like a conventional electric trolley.

- Your RoboKaddy handset has been designed for ease of use whether you are left or right handed.
- Take time to practice the difference between a single touch of the key and a prolonged push especially with left and right functions.
- The clip on the back of the handset makes it ideal for clipping to a pocket or belt. Don't store it in your pocket in case you accidentally engage any of the remote modes.
- Never store the handset in a pocket with, for instance, loose change. Never allow the handset to get immersed in water.
- The handset takes a replaceable 9 volt battery, you will need to remove the two small screws on the back in order to replace it.

NOTE: Do not use a rechargeable battery in the hand set as these batteries do not give sufficient voltage for this hand set.
The rate at which course correction, i.e. left/right, is achieved will depend on course conditions, speed and weight of the loaded bag.

RoboKaddy hints and tips

To get the best from your RoboKaddy the following hints and tips should be followed –

- Practice using your RoboKaddy away from obstructions. It is worth practicing with your golf bag fitted and on grass. The machine will react very differently on a car park surface without a bag.

- Do not overload the base pockets of your golf bag. The more weight on the front wheel of the machine the less maneuverable it will be and it will use more power from the battery.

- The RoboKaddy is a sophisticated machine and will carry your clubs across most normal golf course terrain. However, it will not operate properly if asked to emulate a mountain goat!

  Wherever the terrain is difficult, move to manual mode.

- Should the machine get caught against an obstruction, please stop and either reverse or use manual mode. This is particularly important when using the left/right keys whilst stationary. If you keep trying you will overload the motors.

- Do not keep your finger pressed on any key for more than 5 seconds as this could cause damage to your RoboKaddy.

Special Features

Your RoboKaddy is fitted with some special features to give you maximum control and adaptability. You will not need them often. However it is worth reading the instructions now to familiarise yourself with the range of features available to you.

LED Signal Indicators

Your RoboKaddy is fitted with three sophisticated LED signal indicators one on the handset, one on the handle and one on the base controller under the battery tray. These will help you to diagnose any problems.

Handle:

- **RED** Manual control mode (potentiometer).
- **GREEN** Remote Control Mode.
- **FLASHING RED/GREEN** Manual mode entered with rotary control knob not set to zero. Return potentiometer to zero to enable Manual control.

Base Power Unit:

- **FLASHING GREEN** Unit ready with no errors.
- **SOLID ORANGE** The battery is at a very low voltage, the system will re-set as soon as a fully charged battery is connected.
- **FLASHING ORANGE** Receiving valid command data.
- **SOLID RED** The units over-temperature cut-out has been activated (unit will re-enable automatically when it cools to a safe operating temperature).
- **FLASHING RED** The units over-current cut-out activated, the total current drawn by the motors has exceeded the maximum capability of the system. The unit will automatically re-enable itself in the idle condition after a short delay.

Handset:

The red LED on the handset will illuminate when a button is pressed showing that the signal has been sent.

Please see the trouble shooting guide for further details.

Straight Line Running

Left/Right Tracking adjustment

Your machine has been factory set to go in a straight line, however, minor adjustments can be made using the trimmer (see below) or bigger adjustments can be made using the front wheel adjuster. Remove the nut covers on the front wheel and loosen the nut slightly until you can move the wheel left and right within a slot, then re-tighten the bolt. Put the machine into freewheel mode with the wheels in the outer position and push the cart forwards freely, keep adjusting until a straight line on a flat surface like Tarmac or concrete is achieved. Repeat this process until the trolley runs straight. This will take time and practice to perfect.

NOTE: If you have air tires insure that they are both between 20-24 psi (1.38-1.65 bar) before you start this process.

Electronic Trimming

Ensure that your "Robokaddy" is on a flat level surface, and that it is not obstructed. It is useful to align your RoboKaddy with an object in the distance so that you know when the "Robokaddy" is traveling in a straight line.

Hold the "Emergency Stop" and "Off" buttons down simultaneously to activate the Trim Mode. The Robokaddy will set off forwards at a pre-determined speed.

Use the Left and Right Turn buttons until the "Robokaddy" is traveling in a straight line.

TIP: If the Robokaddy has been traveling in a left arc, the Right Turn button is used to compensate this.

Press the "Emergency Stop" button to store the new settings. The Robokaddy will now operate as normal.

NOTE – The degree of turn may vary from one side to the other depending on bag load and course conditions.

Your machine and hand set are factory calibrated and ready to work, however should you ever lose the hand set OR find that your playing partners machine interferes with your RoboKaddy, please contact PowaKaddy on the telephone number or email address shown below.

PowaKaddy Customer Care 1-800-569-2122 OR
+4401795 473 555 customercare@powakaddy.co.uk

Questions and Answers

How do I switch the trolley from manual control to remote control?

a) Ensure that the rotary control knob is set at zero and put the rocker switch into the Remote (I) position, the handle LED will show green, you can now use in remote control mode.

How do I regain manual control from remote mode?

a) Ensure the rotary control knob is set to zero.
b) Turn the rocker switch to manual (O).
c) Turn the rotary speed control knob to the desired setting.

How do I use the trolley in manual mode from the start?

a) Turn the rotary speed control knob to zero.
b) Turn the rocker switch to manual (O) the handle LED will now show red.
c) Turn the rotary speed control knob and adjust to the desired setting.

How do I brake the trolley on a downhill slope when in remote mode?

a) Press the off key once and the motors will stop. However the trolley can still move forward down the slope against the motors. If an “emergency stop” is required you must press the emergency stop key for more than 1/2 second.
b) On steep slopes your tires may slip. In these conditions, as with any trolley, you will need to hold the handle and help the trolley along in manual mode.

Are there any special conditions that I should be aware of?

a) On steep uphill slopes we recommend that you use manual mode. However, you may like to try either zigzagging up the hill or directing the trolley to a lesser gradient.
b) On steep slopes down hill ensure that you keep full control of the RoboKaddy. In the most difficult of conditions it is best to hold the handle and walk it down in manual mode.

How do I disengage the wheels for freewheel use?

a) On each wheel slide the yellow lever on the hub cap and pull the wheel outwards by a couple of millimetres. Now release the yellow lever and pull out again until it clicks into place. The wheel will now freewheel. To re-engage, reverse the instructions above ensuring the pins enter the holes on the inside of the wheels.

Trouble Shooting

PROBLEM	POSSIBLE CAUSE	WHAT TO TRY
My RoboKaddy will not work.	Main battery flat. Handset battery flat. Main battery not connected. Switching from remote to manual.	Fully charge main battery. Check the LED in the centre of the handset, if flashing red when activated all is ok. Try RoboKaddy in manual mode. Check battery connections. Turn the machine off then on with the rocker switch and try again.
My RoboKaddy stops on the course without my command.	Machine is out of range. Batteries are running very low.	Move closer and try again. Recharge main battery/ replace. Have the main battery checked/replaced.
My battery has failed and I can't push my RoboKaddy.	Have you disengaged the wheels?	Check and follow section on disengaging wheels in Q and A.
My RoboKaddy will not go in reverse.	Machine not stationary	The trolley must be stationary and off or stop keys pressed before you can select reverse.
The LED on the base controller is displaying a red light.	The thermal overload has been tripped.	Avoid the obstruction or circumstance that has caused this.The unit will re-set when a safe working temperature has been reached.

Trouble Shooting

PROBLEM	POSSIBLE CAUSE	WHAT TO TRY
The LED on the base controller is flashing red light.	The current overload has been tripped.	Avoid the obstruction or circumstance that has caused this. The unit will re-set after a short while in the idle position
The LED on the base controller is displaying an orange light	The main battery has fallen to below the required voltage to operate.	If you are attempt more than 18 holes, this may sometimes occur. If you have forgotten to charge the battery, this will occur. At any other time speak with your service agent or PowaKaddy for help.
The LED on the base controller is displaying a flashing orange light.	The handle is communicating correctly with the base controller.	No action needed.
My trolley pulls to left or right on a flat surface.	Trimmer function requires adjustment. Tracking is out of adjustment. Air tire models, tire soft on one side	See page 7 for trimmer details. See page 7 for tracking instructions. Ensure tires are both between 20 - 24 psi (1.38 - 1.65 bar).

Remote Control Detail

- Your RoboKaddy complies with all current telecommunications regulations.
- Your RoboKaddy is designed to operate within a range of 50 yards, depending on atmospheric conditions, such as damp and foggy weather and/or wet ground. Additionally overhead cables, hills and trees can affect range.
- We strongly recommended not Exceeding 50 yards while operating in remote control mode. The greater the distance between you and the RoboKaddy, the greater the chance of losing contact with it. Should this happen however, the RoboKaddy will stop automatically.
- Interference can take many forms. Nearby high voltage power lines, cellular phones or CB radios are all typical sources. Certain obstructions such as mounds, clusters of trees etc. will reduce the distance of transmission.
- The battery contained in the handset must be replaced periodically depending on frequency of use.
- In car parks, confined spaces, down steep hills or where there are lots of people, we recommend that you only use manual mode.

SAFETY NOTES: The RoboKaddy is more safely used when you select manual mode to go across bridges, narrow paths, steep slopes or between trees. Avoid directing the RoboKaddy around cars or buildings using remote mode and never direct the machine at people, animals or other trolleys.

Maintenance

- Wipe your PowaKaddy RoboKaddy after each outing to ensure it runs smoothly and keeps it's good looks.
- To keep the machine clean, use a mild detergent and warm water. Do not use any high pressure jet washers as the contents of the handset, the handle and the base controller can be damaged by water ingress. Remove the main wheels every few months and remove any debris that might cause the wheels to drag. Clean the spindle and lightly grease before replacing the wheels.
- The screws in the battery tray are sealed in the factory to prevent water getting into the controller underneath. If you loosen these screws for any reason, you MUST re-seal them with silicone sealant.
- A four hour round of golf played once a week for 12 months is equivalent to, say, four years use out of a lawnmower. So once a year, thoroughly inspect your machine, and arrange a full service with your PowaKaddy service centre.
- It is advisable to have your charger checked periodically, particularly when buying a new battery. This will ensure that your charger is still charging correctly and ensure maximum life of your new battery.
- Always put your machine together before connecting the battery.
- If you prefer not to leave your battery on charge, as you know that you will not be playing for at least a month, you can store the battery. Fully charge the battery, remove from the charger and store in a place where the ambient temperature is above 10 degrees Celsius (+10°C) and less than 30 degrees Celsius (+30°C). Recharge every 3 months for 24 hours and before your next round.

Complete Guide to Battery and Charger Care

Your battery should always be charged with its lid uppermost, in practical terms this is when the vent strip is uppermost and Crisscross pattern is underneath (Sonnenschein) or lid with + and - (Yuasa) is uppermost. If your battery is in a PowaKaddy battery bag, the see through business card pocket should be uppermost for charging only.

These lead-acid cyclic batteries use the latest technology to immobilise the electrolyte in the battery. This makes them very safe to use and maintenance free for the whole of their serviceable life.

The battery must be put on charge for a period of 24 hours, this will "activate" the battery. You will find that the "charge complete" light comes on before the 24 hours are up, you must keep the battery on charge.

The battery must only be used for a maximum 18 holes after which time the battery should be re-charged as soon as possible (within a 24 hour period). Playing more than 18 holes will over discharge the battery to the point of damage.

Leave the battery connected to the charger with the mains supply switched on all the time the battery is not being used. If you prefer not to leave your battery on charge as you know that you will not be playing for at least a month, you can store the battery. Fully charge the battery, remove from the charger and store in place where the ambient temperature is above 10 degrees Celsius (+10˚C) and less than 30 degrees Celsius (+30˚C). Recharge every 3 months or 24 hours before your next round.

When charging the battery do not place the battery on a concrete floor, have the battery raised off the floor on wooden blocks or place the battery on a shelf.

The batteries used by PowaKaddy are NOT nickel-cadmium, you should never fully discharge the battery with a light bulb or other means. This will, if done, cause severe damage to your battery and if the voltage has fallen below 9 Volts the charger will not be able to recover the battery.

The life of the battery will depend on several variables:

1) Frequency of use.
2) Number of holes played each round.
3) Type of course, flat or hilly.
4) Weight of bag and clubs.
5) Compliance to all of the attached recommendations.

The chargers used with all PowaKaddy products are specially designed to charge the battery at optimum levels. The unit is very simple to use - simply plug the charger into the battery and switch on the mains. Before using the charger, read all the instructions and cautionary markings on the rear of the charging unit and instructions supplied.

Do not expose the charger to any form of moisture. Place on a hard surface in a well ventilated area. Do not use in a sealed container or cover the ventilation slots, and do not operate the charger on carpet or similar soft material.

If you disconnect the battery or interrupt the power supply the charger will automatically assume that a different battery has been attached and take it through the 6.5 hour charging cycle again, please avoid this.

Hints and Tips

✔

Always charge the battery with its lid uppermost.

Always connect the battery to the charger before connecting to the mains.

Always put your battery on charge as soon as you return from the golf club.

Always keep your battery on charge all the time it is not being used.

Always have your charger regularly checked. (Ideally each time you buy a new battery)

Always keep your battery and charger in a dry place.

Always recharge your battery after every round, even if you've only played 5 holes.

Always charge in a well ventilated area.

✘

Never play more than 18 holes of golf from one charge.

Never drop the battery or allow it to roll around in your car boot.

Never leave the charger switched off with the battery connected.

Never operate the charger with a damaged lead.

Never fully discharge the battery.

Never leave the battery in a discharged condition; recharge as soon as possible.

POWAKADDY

Please use this space to record your date of purchase, serial number and code.

RoboKaddy Serial Number : _____

Battery Serial Number : _____

Charger Serial Number : _____

Date of purchase : _____

NOTES

Quick Start Guide
If missing please call
PowaKaddy Customer Care
1-800-569-2122