# Installation Guide with HyperTerminal Configuration

# WT5800 Locator

**WebTech Wireless Inc.**

**Version 0.4**
**September 2006**

© Copyright 2006 WebTech Wireless Inc. All rights reserved.

215-4299 Canada Way, Burnaby, BC V5G 1H3 Canada

email: documentation@webtechwireless.com

Document #: 01100-668

Version: 0.4

Status:

# Contents

*Module 1*

**Safety Hazards & Installation Requirements ..... 1-1**

Contact Information ..... 1-1

Safety Hazards ..... 1-1

Installation Requirements ..... 1-2

*Module 2*

**Configuration of the Wireless Local Area Network (WLAN) ..... 2-4**

Customer Supplied SSID and WEP Key ..... 2-4

Customer DID NOT Supply SSID and WEP Key ..... 2-4

*Module 3*

**Locator Antenna Installation ..... 3-5**

Locator Mounting and Placement Guidelines ..... 3-5

Antenna Installation Dos and Don’ts ..... 3-6

GPS Antenna Installation ..... 3-7

Covert GPS Antenna Installation ..... 3-8

802.11g Antenna Installation ..... 3-9

*Module 4*

**Electrical Safety & Wiring Guidelines ..... 4-10**

Electrical Safety ..... 4-10

Electrical Wiring Guidelines ..... 4-11

*Module 5*

**WT5800 Locator Wiring & Telemetry Activation ..... 5-15**

Power Harness Installation ..... 5-15

Power/Serial Cable Connections ..... 5-16

Power/Serial Cable Wiring Diagram ..... 5-17

LED Definitions and Checkpoints ..... 5-18

Telemetry Activation and Installation Check ..... 5-19

*Appendix A*

**Terminology and Background ..... A-1**

What are WIFI, WLAN and WAP? ..... A-1

What is a HyperTerminal?..... A-2

Why Is the Locator Configured to the WAP (the Router)? ..... A-2

What is a Service Set Identifier (SSID)? ..... A-2

What is Wired Equivalent Privacy (WEP)?..... A-3

*Appendix B*

**Set Up & Configure the Locator With HyperTerminal ..... B-1**

Set up and Open HyperTerminal ..... B-1

Configuring the Locator(s) Using HyperTerminal..... B-4

Laptops with USB Ports - Purchase USB to Serial Converter Adapter... B-6

*Appendix C*

**Locator Information Sheets ..... C-1**

*Appendix D*

**Regulatory Information..... D-1**

Statement of the Federal Communications Commission (FCC)..... D-1

*Appendix E*

**WT5800 Wiring Diagram ..... E-1**

Module 1

# Safety Hazards & Installation Requirements

## Contact Information

If there are any questions contact WebTech Wireless Technical Support

- email: support@webtechwireless.com
- Phone: 604-419-8163 or 1-866-287-0135 option 3

If you have any comments or suggestions regarding this document please send an email to:

- documentation@webtechwireless.com

Updated versions of this manual are available on the customer portal at www.webtechwireless.com.

## Safety Hazards

This section describes important safety guidelines to follow while installing a Webtech Wireless Locator.

Also refer to Electrical Safety on page 4-10.

- Do not install or operate a WebTech Locator in areas where explosive atmospheres may be present.
- Do not install a WebTech Locator in any vehicle powered by liquefied petroleum gas or governed by petrochemical regulations without additional operational safety precautions being taken.
- Do not install a WebTech Locator near life support or other sensitive equipment that may be affected by radio transmissions. If required, consult the equipment manufacturer for guidance.
- During car and truck installations, it is recommended that vehicle tires are blocked to prevent roll back.
  Periodically throughout installation, the emergency brake will be off and the engine running, during which time the vehicle may move unexpectedly.

# Installation Requirements

## Equipment Included

***Note*** A Wireless Local Area Network (WLAN) is required for the operation of the WT5800 Locator. Refer to Configuration of the Wireless Local Area Network (WLAN) on page 2-4.

**Figure 1-1 WT5800 Locator with an 802.11g antenna**

**Figure 1-2 GPS antenna and cable**

The Locator is shipped with:

- ❑ Two antennas: one 802.11g stubby and one GPS magnetic-mount (as shown above).
  The 802.11g stubby antenna is attached to the Locator and used in both typical and covert installations.
- ❑ An installation guide
- ❑ A Locator information sheet (See Appendix C for an example)
- ❑ A power/serial data cable

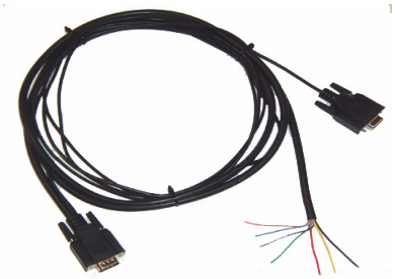

## Equipment and Tools Required

- ❑ To perform diagnostics and confirm Locator operation, a laptop computer with one RS232 serial port available (or USB to 9 pin serial adapter), serial cable and HyperTerminal communication software may be required.

### Wiring Tools and Accessories

- ❑ Wire stripping tools
- ❑ Multi-meter
- ❑ Solder iron (butane recommended if there is no power source)
- ❑ Crimp tool
- ❑ Flashlight
- ❑ Heat-shrink tubing
- ❑ Automotive grade wire (16-18 AWG)
- ❑ Electrical tape
- ❑ Rosin core solder
- ❑ Automotive wire ring terminals
- ❑ In line ATO fuse holder
- ❑ Fuses
- ❑ Cable ties
- ❑ Cable tie mounts

### Hardware Mounting Tools and Accessories

- ❑ Drill
- ❑ Screwdriver
- ❑ Screws
- ❑ Nuts, washers, as required
- ❑ Silicone sealant
- ❑ Torque seal

Module 2

# Configuration of the Wireless Local Area Network (WLAN)

The WT5800 Locator is designed to be used in a wireless environment. This section outlines two options to configure the WT5800 WIFI network SSID and encryption key.

***Note*** Refer toTerminology and Background on page A-1 for help with WLAN terminology.

## Customer Supplied SSID and WEP Key

IF the customer supplied the WIFI network SSID and WEP encryption key to WebTech Wireless at the point of sale

THEN the WT5800 is pre-programmed by WebTech Wireless with the customer supplied SSID and WEP encryption key.

Go to Locator Antenna Installation on page 3-5.

## Customer DID NOT Supply SSID and WEP Key

IF the customer **DID NOT** supply a SSID and WEP encryption key to WebTech Wireless at the point of sale

THEN the WT5800 is pre-programmed with a default SSID and randomly generated WEP encryption key.

- ❑ The default SSID and WEP encryption key is listed in the Locator Information Sheet (shipping/packing list), which is included with the WT5800 shipment (see an example of the Locator Information Sheets on page C-1).

Go to Configuring the Locator(s) Using HyperTerminal on page B-4.

***Note*** When Locator WLAN configuration is complete, go to Locator Antenna Installation on page 3-5

Module 3

# Locator Antenna Installation

This section describes the requirements and steps involved to install the GPS and GSM802.11g antennas.

**Proper antenna location and cabling technique is critical to optimal operation and performance of the Locator. This includes both coverage and throughput performance.**

## Locator Mounting and Placement Guidelines

**Avoid heat, e.g. proximity to heaters or ducts, engine exhausts, or direct sunlight.**

**Allow access to the Locator connectors such that the LED is visible (where this is not a covert installation).**

- ❑ Protect the mounted Locator from moisture.
- ❑ Place the Locator where physical damage to the unit is minimized, e.g. under the dashboard or in the trunk.
- ❑ Use a clean mounting surface if using Velcro.
- ❑ Mount and secure the Locator with screws and drill the holes.The Locator comes with holes in the flanges to enable mounting.
- ❑ If the installation is covert go to Covert GPS Antenna Installation on page 3-8.

# Antenna Installation Dos and Don’ts

**DO**

- ❑ Use only the supplied (or WebTech approved) antennas designed for the correct frequencies.
- ❑ Mount GPS antennas with a maximum view to the sky.
- ❑ Mount antennas outside and on the vehicle roof (where possible).
- ❑ Mount antennas securely. With through-hole installations, confirm the installation is water tight (use silicone sealant).

**DON'T**

- ❑ Don't mount antennas in areas with limited space for a ground plane. Ground planes should provide at least 6" (15cm) of metal in all directions.
- ❑ Don't mount antennas close to another antenna. Provide as much distance between antennas as possible. This includes the GSM802.11g and GPS.
- ❑ Don't mount antennas where they are covered or blocked by metal.
- ❑ Don't mount antennas close to people. Antennas should be mounted where vehicle occupants will be separated from the radiating element by at least 8" inches (20 cm).
- ❑ Don't mount antennas where they are close to electronic management and control systems.
- ❑ Don't mount GPS antennas where they will be on an angle. They should be horizontal to see as much sky as possible.
- ❑ Don't run the GPS antenna cable to the roof of a vehicle through the door. The vehicle door will eventually sever the cable and lose connection between the GPS and Locator.
- ❑ Don't tightly kink or wrap excess cable. Be careful not to trap any cables when refitting trims to the vehicle.
- ❑ Don't over tighten the connection between the antenna and the Locator. Ensure that the antenna is not loose. E.g. hand tighten then use a wrench to tighten another 1/8 of a turn (approximately).

# GPS Antenna Installation

If the installation is covert also go to Covert GPS Antenna Installation on page 3-8.

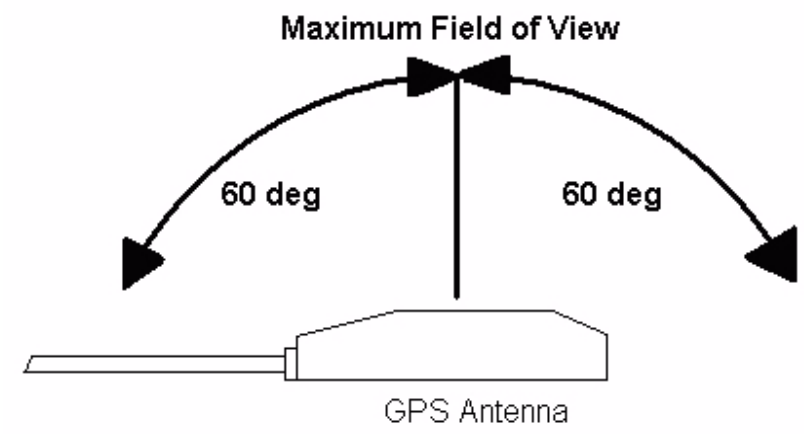


***Important*** The GPS antenna must be facing up.

**Figure 3-1 GPS antenna mounted on a roof and facing up to the sky**

***Note*** Be careful when placing, moving or removing the magnetic-mount antenna. Do not drag it across the metal surface as this will damage the finish of the vehicle.

**Installing the GPS Antenna**

1. Determine the optimal location for the GPS antenna. Place and mount the magnetic GPS antenna (square black antenna) on an area of the vehicle where there is no obstruction of the sky, for example
   - ❑ On the vehicle roof or
   - ❑ Under a non-metallic dash in a vehicle with a sufficiently sloped windshield.
2. Run the antenna cables to meet the Locator.
3. Confirm that the GPS has a fix (solid or flashing green LED) (refer to LED Definitions and Checkpoints on page 4-16).
4. Secure the magnetic GPS antenna to the mounting area with adhesive, e.g. silicone. Or consider installing a through-hole mount antenna.
5. Secure cables using cable ties and mounts where applicable.

# Covert GPS Antenna Installation

***Important*** Test the GPS thoroughly under operational conditions.

Also go to 802.11g Antenna Installation on page 3-9.

The following must be considered with respect to the antenna's location. These considerations apply to

- ❑ All installations where it is essential the GPS antenna is hidden from view.
- ❑ Car and small truck installations where the Locator may be hidden from view and installed under the dashboard or behind the stereo system.
- ❑ Larger trucks with sloped front windscreen or fiberglass rooftop coated with a non-metallic paint.

**Covert GPS Antenna Location**

- ❑ Ensure the view of the sky is as wide as possible.
- ❑ Ensure the field of view is not obscured by any metallic object (including front windscreens with heating, UV filters or metallic tints).
- ❑ Point the top of the antenna towards the field of view.
- ❑ Enhance signal strength by mounting directly onto metal.

**Optimal Covert GPS Antenna Mounting Locations**

- ❑ Under the front or rear window of the vehicle.
- ❑ Under the dash lining.
- ❑ Under a non-metallic parcel shelf.
- ❑ In an instrument or light cluster.

# 802.11g Antenna Installation

***Important*** Ensure the 802.11g stubby antenna is in the vertical position and the connection to the Locator is secure.

- ❑ The Locator is shipped with a stubby 802.11g antenna. This antenna is adequate for most uses and required for all installations.
- ❑ Use a WebTech approved external high-gain antenna if superior coverage and throughput performance is required.
- ❑ An optional dual-mode (802.11g/GPS) through-hole dome antenna is available through WebTech Wireless Technical Support.

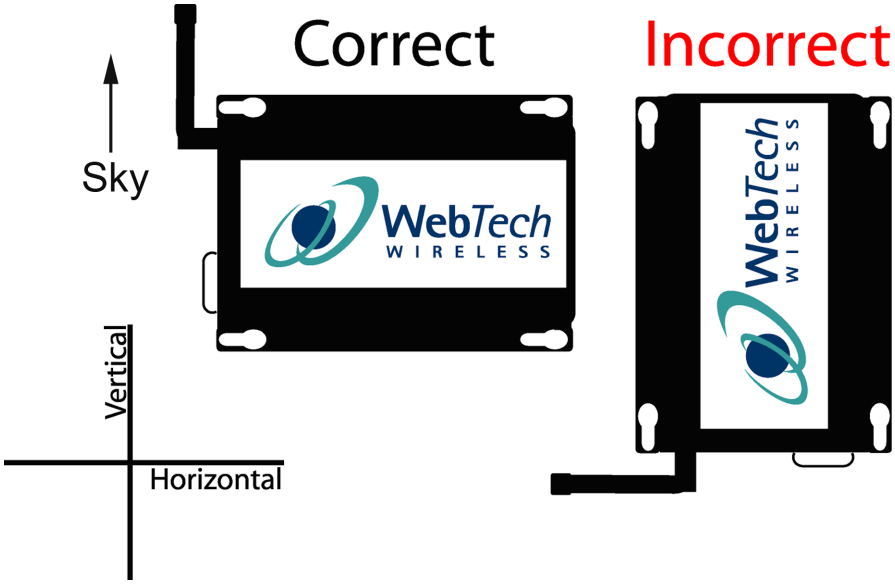


**Figure 3-2 Correct antenna orientation - vertical to sky**

Module 4
# Electrical Safety & Wiring Guidelines

## Electrical Safety

**Locate or confirm power sources prior to disconnecting the vehicle battery.**

**Disconnect the vehicle battery prior to making any electrical connections.**

***Important*** Safety Guidelines Include:

- ❑ Consult the vehicle manufacturer guidelines regarding disconnection of the vehicle battery or when making supplementary electrical connections.
- ❑ Before disconnecting a battery, understand the consequences to that vehicle, e.g. radio codes need to be available and know the reset procedure for airbag systems, ECU's etc.
- ❑ Remove or cover any jewelry if working on live electrical systems.
- ❑ Don't test electrical circuits using a test lamp. Use a high impedance multi-meter with both voltage and resistance ranges.
- ❑ Don't tamper with or disconnect the air bag or SRS electrical harness.

# Electrical Wiring Guidelines

Read these guidelines before preparing the harness.

## Use appropriate pick-up points for power wiring

***Important*** Don't splice into individual lines going to other electrical devices that exhibit substantial momentary voltage drops.

- ❑ For example, wires going to heating mirrors or a vehicle's charging indicator are particularly susceptible.

If possible wire to a power bar or suitable common terminal connection point.

- ❑ Use a multi-meter to confirm +12 V DC or +24 V DC (9 to 30 Volts) power. Do not use a test lamp.

**Battery connection (red wire)**

- ❑ Ensure uninterrupted power to the Locator (supply voltage under 9Vdc) when the engine is being started.
- ❑ Connect to a continuous +12V DC or +24V DC (9 to 30 Volts) supply.
- ❑ Take from the secondary side of the main distribution fuse from the vehicle battery. Do not share a fused supply to any other equipment.
- ❑ Fuse the line at source to provide protection against shorting of the wiring harness (the Locator is internally protected).

**Negative Ground (Earth) connection (black wire)**

- ❑ Always connect directly to a dedicated earth point within the vehicle electrical system.
- ❑ Use a unique earth point.
- ❑ When required, create a suitable earth point where no corrosion will occur. A duplicate connection with other systems could cause a build up in contact resistance.Supply voltage problems may occur and result in erratic Locator operation.
- ❑ Avoid earth points that also serve engine management ECU, ABS or air bag systems etc.

**Ignition connection (yellow wire)**

***Important*** To prevent incorrect operation, ensure the power is not interrupted for more than 5 seconds when the engine is started (supply voltage under 9Vdc).

- ❑ Connection to an ignition signal which goes positive +12V DC or +24V DC (9 to 30 Volts) when the key is in the "run" position and is removed or goes to ground when the key is in the "off" position.

## Solder Connections

***Important*** Ring connectors are ONLY acceptable for ground point and when connecting to power bars with screws. No other crimp connectors are acceptable.

- ❑ Wire should be fully inserted into the connector with insulation intact - don't leave bare wire exposed
- ❑ If wires are combined, ensure the connector can handle the resulting gauge.
- ❑ Be sure to crimp connectors properly with the correct sized crimp tool. Confirm the physical connection is solid.
- ❑ Solder the wire to the crimped connection.
- ❑ Use toothed washers where bolting connectors to the vehicle. Make sure the ground connection is solid and reliable.

## Ensure wiring is correct

**It is critical that the ignition wire is connected to the vehicle ignition wire and not to the battery.**

## Don't Use Quick Taps

Quick taps

- ❑ Are not good for critical power supply connections.
- ❑ Cut into the connected wire, reducing the life of the wire and reducing its voltage and current handling capabilities.
- ❑ Increase the risk of corrosion and crush-type wiring failures.

***Note*** Vehicle vibrations will eventually separate a quick tapped wire from the Locator, losing connection to the unit.

## Don't leave cut wires exposed

- ❑ Check for accidentally cut wires, which can damage vehicle wiring or devices, and cause a fire.
- ❑ Tape or heat-shrink all wire cuts so there is no risk of shorting or corrosion.
- ❑ If a splice is necessary, strip-away a small portion of the insulation, solder the wires then protect by using electrical tape to re-insulate.
- ❑ Don't leave free connector contacts or pins exposed. Tape or properly terminate all connectors.

## Route cables properly

- ❑ Never put cabling where it will be stepped on, e.g. under rugs or mats.
- ❑ Never wire in areas that will retain moisture. E.g. insulation under the carpet holds water and can be damp, making wiring connections highly susceptible to corrosion.
- ❑ Never put cable where a passenger or driver's feet rest on top of the wires.
- ❑ Never run the GPS antenna cable to the roof of a vehicle through the door. The vehicle door will eventually sever the cable.
- ❑ Where possible secure wiring in the wiring channel provided by the vehicle manufacturer. Use split looms and grommets where appropriate.
- ❑ Tie wrap and tape cables (or cable tie mounts) to keep secure.

Module 5

# WT5800 Locator Wiring & Telemetry Activation

## Power Harness Installation

Also refer to Power/Serial Cable Wiring Diagram on page 5-17.

**Correct vehicle wiring technique and hardware is essential to proper Locator operation.**

**It is critical that the ignition wire is connected to the vehicle ignition wire and not to the battery.**

1. Connect **red wire (battery)** to +12V or +24V (9 to 30 Volts). Ensure positive voltage is between 9 and 30 Volts.
2. Connect **black wire (ground)** to **vehicle ground**.
3. Connect **yellow wire (ignition)** to **vehicle ignition**.

# Power/Serial Cable Connections

This section describes the power/serial data cable connections.

**Table 5-1 WT5800 Power/Serial Data Cable Connections**

| Seq | Color | I/O Name | General Description | Install Description | |
|---|---|---|---|---|---|
| 1 | Blue/White | OUTPUT 7 | Ground pulse output (200-milliamps) | Optional | AUX |
| 2 | Green/White | OUTPUT 8 | Ground pulse output (200-milliamps) | Optional | AUX |
| 3 | Purple/Black | INPUT 4 | Input detecting ground contact closure (protected up to 30 V) | Optional | AUX |
| 4 | Orange/Black | INPUT 5 | Input detecting ground contact closure (protected up to 30 V) | Optional | AUX |
| 5 | Yellow | Ignition | Ignition | Mandatory | |
| 6 | Red | Power<br>+12Vdc or +24Vdc (9 to 30 Volts) | Power Supply | Mandatory | |
| 7 | Black | GND | Ground | Mandatory | |

***Note*** Use of the serial data connection is optional.

| General Description | Install Description | |
|---|---|---|
| TX Data | Optional | Serial Cable |
| RX Data | Optional | Serial Cable |

# Power/Serial Cable Wiring Diagram

**Unused wires must be insulated to prevent shorts.**

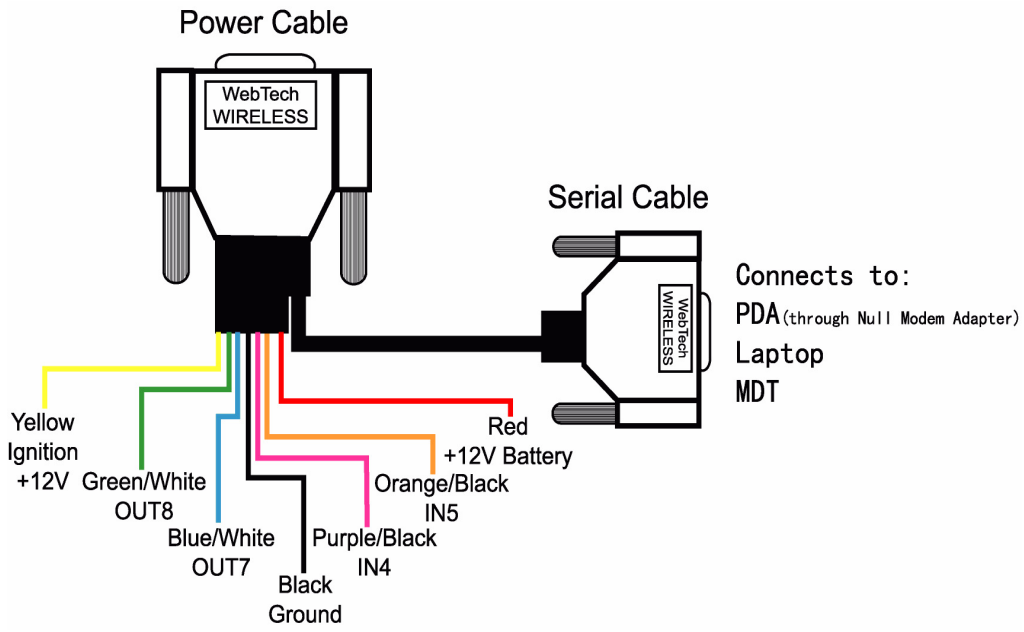

# LED Definitions and Checkpoints

**Table 5-2 LED Definitions**

| LED | Meaning | |
|---|---|---|
| Off | The locator is powered off | |
| | **802.11g** | **GPS** |
| Flashing Red | No wireless connection | No GPS fix |
| Flashing Green | No wireless connection | GPS fix |
| Solid Red | Wireless OK | No GPS Fix |
| Solid Green | Wireless OK | GPS Fix |
| One second flutter (red or green depending on GPS fix) | Message sent or received | |

**Table 5-3 LED Checkpoints**

| | |
|---|---|
| If the LED is flashing RED one second off and one second on | ❑ The Locator has neither a GPS fix nor a wireless connection.<br>❑ Ensure that the GPS antenna has a clear line of sight to the sky and that the vehicle is in an area with a WIFI 802.11 g access point. |
| If the LED is flashing GREEN one second off and one second on | ❑ The device has GPS activation but no wireless connection.<br>❑ Ensure that the wireless antenna is properly attached to the device and that the vehicle is in an area with a WIFI 802.11 g access point. |
| If the LED has a solid RED light | ❑ The device has wireless connection but no GPS network visibility.<br>❑ Ensure that the GPS antenna is properly connected to the device and has a clear view to the sky. |
| If the LED has a solid GREEN light | ❑ The Locator has both GPS and 802.11g network coverage. |

# Telemetry Activation and Installation Check

1. Contact Technical Support
   - ❑ During regular business hours, contact Technical Support by phone 1-866-287-0135 option 3.
   - ❑ Outside of business hours, send an email to support@webtechwireless.com.
2. Provide the following information to Technical Support
   a. The Locator serial number
   b. Unique vehicle identifier (e.g. vehicle name)
   c. Telemetry information about the activated inputs and outputs (where applicable)

***Note*** A telemetry activation fee may apply.

Appendix A

# Terminology and Background

This section provides an overview of WLAN terminology that will assist with the configuration of a WebTech Wireless Locator to a WLAN. It is not intended to provide users with in-depth instructions to set up a WLAN.

## What are WIFI, WLAN and WAP?

WI FI is the name for a Wireless Local Area Network (WLAN). WIFI communication technology is synonymous with the IEEE 802.11 family of wireless networking standards, which includes the three established standards 802.11b, 802.11a and 802.11g. The WT5800 Locator uses the 802.11g standard.

A Wireless Access Point (WAP) is a component of a WLAN. It is a device that connects wireless communication devices to a broadband router (Router).

***Important*** The WLAN must be set up prior to configuring the Locator(s) and before vehicle installation.

***Note*** Follow the manufacturer's instructions to set up the WAP Router. An internet connection is required for the Router setup and it needs the DHCP server enabled, with default firewall settings recommended.

***Note*** To maximize a WLAN signal range requires several placement considerations, e.g. the number, thickness and location of walls, ceilings, or other objects may limit the range of the signal. Typical ranges vary depending on the types of materials and background RF (radio frequency) noise. Refer to the Manufacturer's instructions for more information.

# What is a HyperTerminal?

***Note*** These instructions apply to a HyperTerminal operating in a Windows XP environment.

HyperTerminal is a software communications program that is standard with the installation of a Microsoft Windows operating system. It is a tool used to connect other computers and devices together. The HyperTerminal is also used for testing modems and other terminal equipment, in this case, the WT5800 Locator.

# Why Is the Locator Configured to the WAP (the Router)?

The Locator collects information using GPS technology. This information is stored on the Locator until it is transmitted to the Webtech Wireless Quadrant server. The WLAN enables this transmission of data.

The Locator must identify the correct WAP device (the Router) to which the data will be transmitted. The unique identifier (SSID) and the corresponding encryption (WEP) enable the two devices to communicate with each other. See Set up and Open HyperTerminal on page B-1 for more information.

# What is a Service Set Identifier (SSID)?

**Each device in a wireless network MUST use the same SSID or the wireless network will not function properly.**

The Service Set Identifier (SSID) is the unique name assigned to the wireless network. The SSID in the Router has a factory default setting.

***Important*** Hackers know wireless factory defaults.

- ❑ Change the SSID default to a unique identifier and change it periodically.
- ❑ Disable SSID broadcast.

While setting up the Router, write down the new and unique SSID for use during Locator configuration.

- ❑ If the unique SSID is lost or forgotten, consult the Router manual to find out how to recover or change it.

# What is Wired Equivalent Privacy (WEP)?

**Each device in a wireless network MUST use the same WEP key or the wireless network will not function properly.**

Wired Equivalent Privacy (WEP) is a method of encrypting network data transmitted on a wireless network. The WEP encryption key must be set (and matched) in both the Router and in the Locator. This is done through HyperTerminal (refer to Configuring the Locator(s) Using HyperTerminal on page B-4).

The Locator uses two encryption types.

1. WEP 64-bit encryption requires an entry of exactly 10 hexadecimal characters (the HEX key).
2. WEP 128-bit encryption requires an entry of exactly 26 hexadecimal characters (the HEX key).

❑ Valid HEX key characters are "0" to "9" and "A" to "F".

While setting up the Router, write down the new and unique WEP key for use during Locator configuration.

❑ If the unique WEP key is lost or forgotten, a new one must be set up on the Router.

Appendix B

# Set Up & Configure the Locator With HyperTerminal

This section applies to an infrastructure network installation and not ad-hoc data mode.

When a wireless network is set to infrastructure mode, the wireless network is configured to communicate with a WLAN through a WAP.

## Set up and Open HyperTerminal

***Note*** If HyperTerminal is not set up continue with this Section.

If HyperTerminal has previously been set-up, go to Opening a HyperTerminal (Previously) Set Up on page B-2.

The steps apply to a HyperTerminal operating in a Windows XP environment.

The PC or laptop must have an available COM port.

- ❑ If the laptop does not have a COM port, go to Laptops with USB Ports - Purchase USB to Serial Converter Adapter on page B-6 for further instructions.

### Setting up HyperTerminal

1. Connect the DB9 female primary serial port into the computer's COM port.
2. Open the HyperTerminal software. Go to **Start >All Programs >Accessories >Communications > HyperTerminal**.
3. Click on the **HyperTerminal** icon to launch the software.
4. Enter the answers to the following questions
   a. Select the country in which the WAP will operate from the pull down list (e.g. Canada).
   b. Enter any area code (e.g. 604).
   c. Enter a name for the new connection (e.g. WT5800 Locator Tests).
   d. Select an icon to be associated with the connection.
   e. Enter any phone number (e.g. 555-5555)

5. Click **OK**.
6. Enter a name e.g. WTW or Test.
7. Click **OK**.
8. On **Connect to Dialogue** select the **COM** port to which the Locator is attached from the **Connect Using** drop down list.

   This will gray out the rest of the fields.
9. Click **OK**.
10. Configure the COM Port Settings as follows

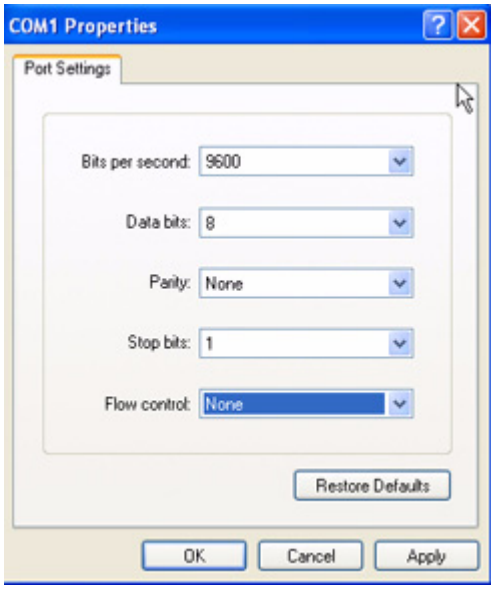


a. Bits per Second: **9600**

b. Data Bits: **8**

c. Parity: **None**

d. Stop Bits: **1**

e. Flow Control: **None**

11. Click **Apply.**
12. Click **OK**.

## Opening a HyperTerminal (Previously) Set Up

***Note*** The steps apply to a HyperTerminal operating in a Windows XP environment.

- ❑ The PC or laptop must have an available COM port.
- ❑ If the laptop does not have a COM port, go to Laptops with USB Ports - Purchase USB to Serial Converter Adapter on page B-6 for further instructions.

1. Connect the DB9 female primary serial port into the computer's COM port.
2. Open the HyperTerminal sub-menu: **Start>All Programs >Accessories> Communications>HyperTerminal Folder**

3. Click **HyperTerminal>HyperTerminal icon** (e.g.Test).

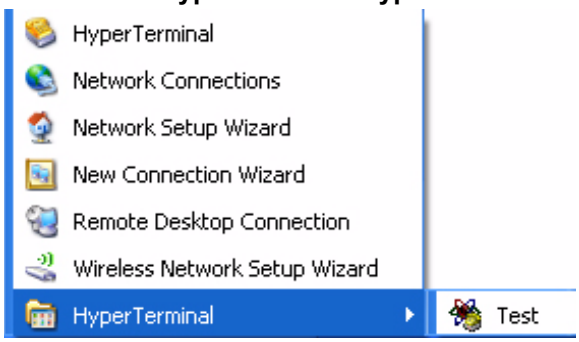


The **HyperTerminal** screen opens.

4. Continue with Configuring the Locator(s) Using HyperTerminal on page B-4.

# Configuring the Locator(s) Using HyperTerminal

***Important*** HyperTerminal configuration requires an independent power source to power the Locator during configuration.

1. In the HyperTerminal screen, click the **Call** or **Connect** button . Or use the pull down menu **Call>Call**.
2. Apply +12V DC or +24 V DC (9 to 30 Volts) power to red (power) and yellow (ignition) wires.
3. Connect black wire (ground).
4. Press **ENTER** immediately and continuously to "wake up" the connection and get the Locator out of the default "PPP" mode.

   **!CMD!** appears in HyperTerminal screen.

***Important*** Step 2 and 3 must be done within 5 seconds of each other and done continuously for 15 seconds.

5. Press **ENTER**.

   **?** appears to the left of the HyperTerminal screen.
6. Type **gateway** and a space.
7. Enter the unique SSID of the Router.
8. Type **@**
9. Enter the unique WEP key.

   The WEP key is a 10 hexadecimal code created at the time of Router installation. The full string will be similar to the following:

***Note*** The WEP key is case sensitive.

   - ❑ **gateway abcrouter@1A2B345678**

10. Press **ENTER**.
11. Type **config save** next to the **?**
12. Press **ENTER**.

    The word **Saved** appears on screen. The configuration is saved.
13. Type **restart**.

    The Locator is configured.

## Disconnecting and Continuing Configuration and Testing

1. Disconnect the Locator.

   It is ready for vehicle installation.
2. Connect another Locator.
3. Go to Step 1 of Configuring the Locator(s) Using HyperTerminal on page B-4.

   Complete Steps 1 to 15 until all Locators have been configured and verified.

4. Go to Locator Antenna Installation on page 3-5 and begin Locator vehicle installation.

# Laptops with USB Ports - Purchase USB to Serial Converter Adapter

Most laptop models come with only USB ports (i.e. no serial port). The HyperTerminal and Locator configuration requires a serial to modem connection (i.e. a COM port).

Purchase a USB to serial converter adapter cable, which will create a serial to modem connection (e.g. a COM port).

***Note*** The COM port made available after installation of the USB to serial cable driver is usually a higher number COM port, e.g. COM4.

Once the adapter is installed on the laptop, continue with Setting up HyperTerminal on page B-1.

# Appendix C
# Locator Information Sheets

WebTech WIRELESS

**LOCATOR INFORMATION SHEET**

Suite 215 - 4299 Canada Way
Burnaby, BC V5G 1H3

Phone: (604) 434-7337 Fax: (604) 434-5270
GST #: 89525 6725 RT0001 BN #: 98-0360148
PST #: R188512

**Company:**

**User Name:**

**Password:**

Thank you for purchasing the WebTech Locator. Your new user name and password are printed above. You can login at http://login.webtechwireless.com

The table below lists the serial numbers for your new Locator unit(s) included in this package. Please fill in the Vehicle Name you would like to assign for each Locator.

Put a check mark in all the columns that applies under Telemetry Outputs and Telemetry Inputs for each Locator unit. Then turn to the next page and fill out the telemetry sensor input/output details.

After you complete this form, please fax it back to Webtech Wireless Inc. at: (604) 434-5270.

| | Unit Information | | | Telemetry Outputs | | Telemetry Inputs | |
|---|---|---|---|---|---|---|---|
| # | Serial Number | License Plate or VIN | Vehicle Name | Output 7 Blue/White | Output 8 Green/White | Input 4 Purple/Black | Input 5 Orange/Black |
| | | | | | | | |
| | | | | | | | |
| | | | | | | | |
| | | | | | | | |

WebTech WIRELESS

**LOCATOR INFORMATION SHEET**

Suite 215 - 4299 Canada Way
Burnaby, BC V5G 1H3

Phone: (604) 434-7337 Fax: (604) 434-5270
GST #: 89525 6725 RT0001 BN #: 98-0360148
PST #: R188512

**Company:**

**User Name:**

**Password:**

The following Telemetry inputs/outputs information helps us identify how you have connected your inputs and outputs to the WebTech WT5000 Locators. If all your WT5000 Locators are installed in the same way, then simply fill out the form below once. Otherwise, make extra copies of this page and fill in one form for each WT5000 Locator you have listed on the first page.

Telemetry Outputs: All the outputs are active negative. To have active positive outputs, see application note "Ground (-) pulse outputs.doc".
Please indicate what telemetry output each wire is connected to.

| Output 7 | Output 8 |
|---|---|
| Blue/White Wire is connected to: ---------- | Green/White Wire is connected to: ---------- |

WebTech WIRELESS

Suite 215 - 4299 Canada Way
Burnaby, BC V5G 1H3

Phone: (604) 434-7337 Fax: (604) 434-5270
GST # 89525 6725 RT0001 BN # 98-0360148
PST # R188512

## LOCATOR INFORMATION SHEET

**Company Name:**

**User Name:**

**Password:**

Telemetry Inputs: All inputs trigger from positive to negative. To trigger from negative to positive, see application note "Ground (-) detection inputs.doc." Please indicate the telemetry sensor that is connected to each wire and put a check mark beside one of the two options provided below.

| Input 4 | Input 5 |
|---|---|
| Purple/Black Wire is connected to: ---------- | Orange/Black Wire is connected to: ---------- |
| ---- The input will trigger on positive -> negative<br>---- The input will trigger on negative -> positive | ---- The input will trigger on positive -> negative<br>---- The input will trigger on negative -> positive |

Ground: The Black wire should connect to ground.

If you have any questions please contact support@webtechwireless.com or call 1-866-287-0135 Option3.

Appendix D
# Regulatory Information

## Statement of the Federal Communications Commission (FCC)

**15.21**

You are cautioned that changes or modifications not expressly approved by the part responsible for compliance could void the user's authority to operate the equipment.

**15.105(b)**

This equipment has been tested and found to comply with the limits for a Class B digital device, pursuant to part 15 of the FCC rules. These limits are designed to provide reasonable protection against harmful interference in a residential installation. This equipment generates, uses and can radiate radio frequency energy and, if not installed and used in accordance with the instructions, may cause harmful interference to radio communications. However, there is no guarantee that interference will not occur in a particular installation. If this equipment does cause harmful interference to radio or television reception, which can be determined by turning the equipment off and on, the user is encouraged to try to correct the interference by one or more of the following measures:

- ❑ Reorient or relocate the receiving antenna.
- ❑ Increase the separation between the equipment and receiver.
- ❑ Connect the equipment into an outlet on a circuit different from that to which the receiver is connected.
- ❑ Consult the dealer or an experienced radio/TV technician for help.

Operation is subject to the following two conditions:

1. This device may not cause interference and
2. This device must accept any interference, including interference that may cause undesired operation of the device.

### FCC RF Radiation Exposure Statement

This Transmitter must not be co-located or operating in conjunction with any other antenna or transmitter.

This equipment complies with FCC RF radiation exposure limits set forth for an uncontrolled environment. This equipment should be installed and operated with a minimum distance of 20 centimeters between the radiator and your body.

# WT5800 Locator Wiring
# Including Optional Telemetry Wiring

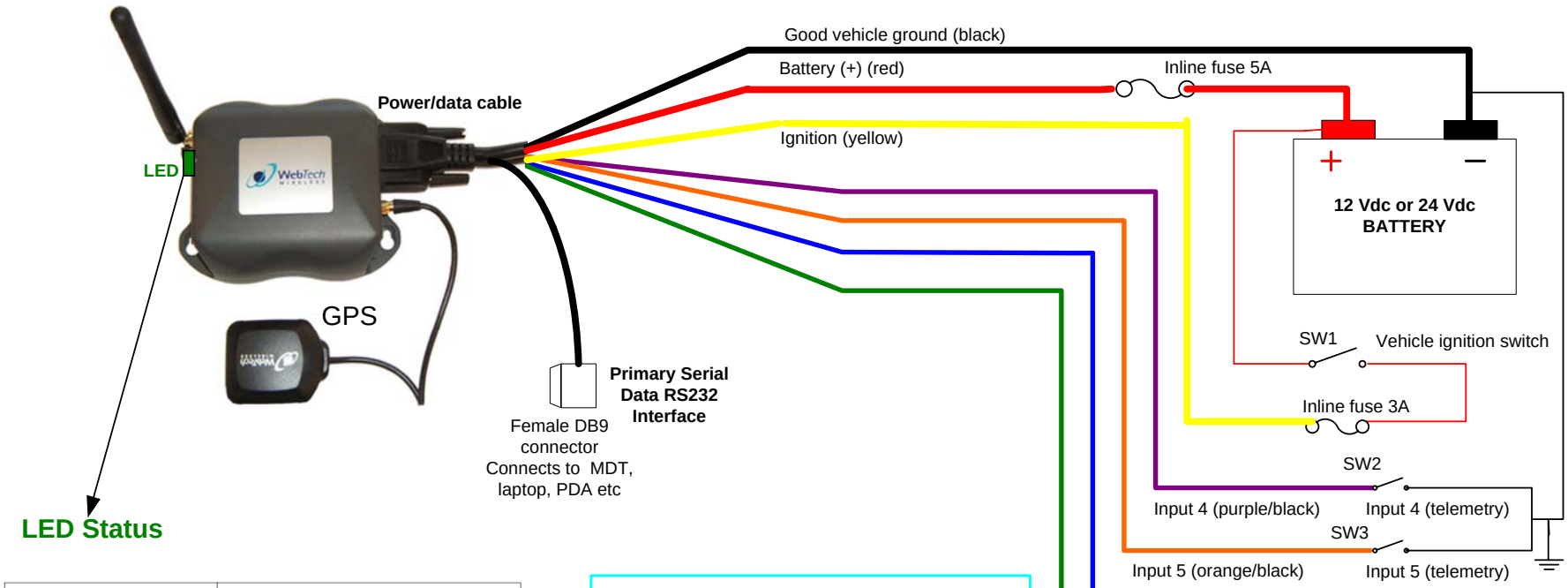


## LED Status

| LED | Meaning | |
|---|---|---|
| Off | The locator is powered off | |
| | 802.11g | GPS |
| Flashing Red | No wireless connection | No GPS fix |
| Flashing Green | No wireless connection | GPS fix |
| Solid Red | Wireless OK | No GPS Fix |
| Solid Green | Wireless OK | GPS Fix |
| One second flutter (red or green depending on GPS fix) | Message sent or received | |

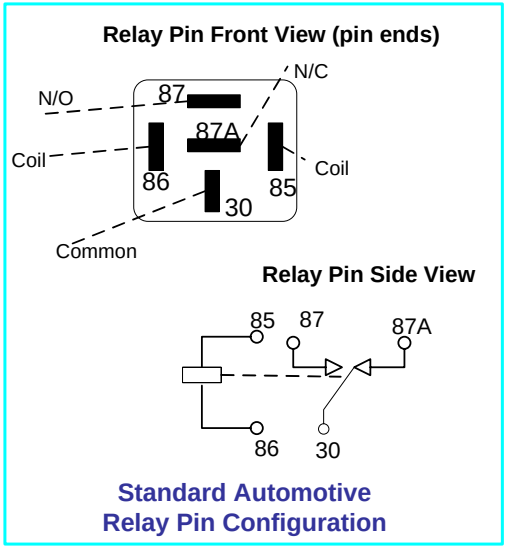


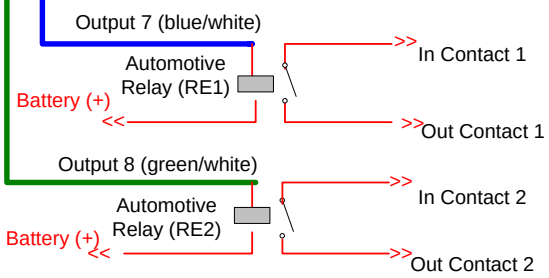


Document # 01100-0806
August 2006