DeLaval activity meter system
Instruction Book

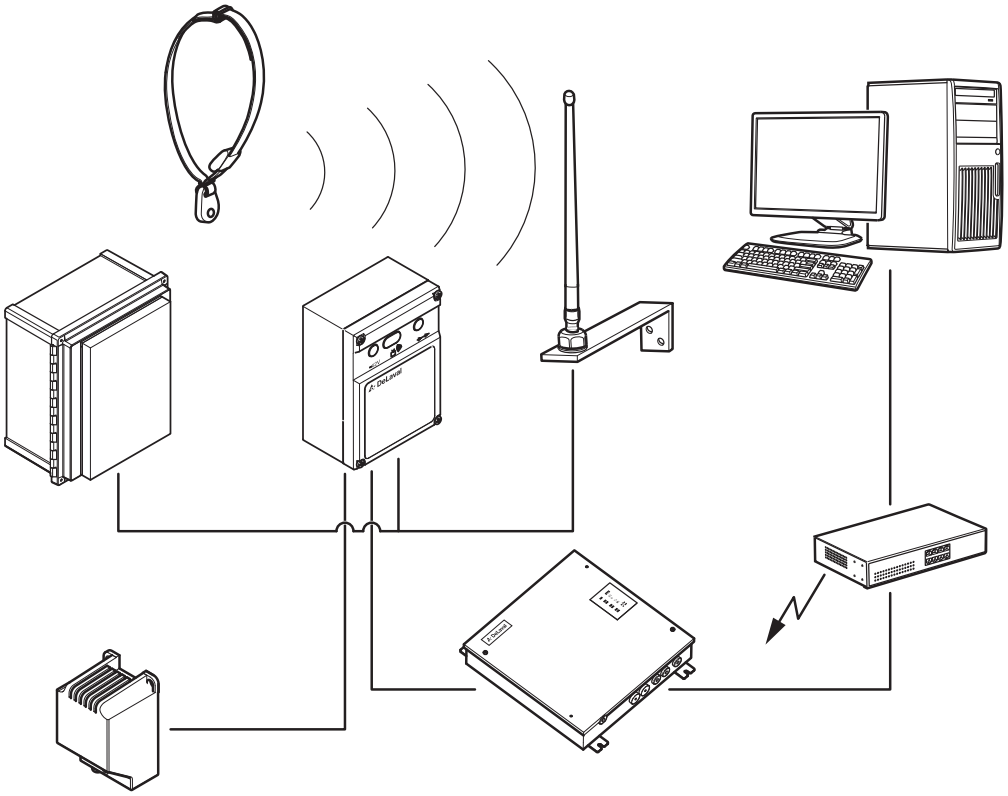

© DeLaval 2024
2024-09-18, Version 1

0123456789 01
Original instruction

Table of contents

1 Safety precautions 5
1.1 Foreword 5
1.2 Disclaimer 5
1.3 Definitions of persons 5
1.4 Definitions of admonishments 5
1.5 General safety warnings 6

2 General description 7
2.1 Overview of the DeLaval activity meter system 7
2.2 Overview of the DeLaval activity meter AM2 8
2.3 Overview of the DeLaval activity receiver AR2 9
2.3.1 LED indications for AR2: receiver function 10
2.3.2 LED indications for AR2 operating as a repeater 11
2.4 Activity repeater function (optional) 12
2.5 DeLaval activity wireless repeater AWR with solar panel 13
2.5.1 LED indications for AWR 14
2.6 Functions of the activity meter system components 15
2.6.1 Models to analyse collected data 15
2.7 Co-existence and compatibility with the previous generation activity meter system 17

3 Installation 19
3.1 Assembling a neckband with an activity meter and a B-transponder 19
3.1.1 Attaching the activity meter to a neckband with a B-transponder 19
3.1.2 Attaching the activity meter to a neckband with a B-transponder and number plates 22
3.2 Assembling a neckband with an activity meter and without a B-transponder 25
3.2.1 Attaching the activity meter to a neckband without a B-transponder 25
3.2.2 Attaching the activity meter to a neckband with number plates and without a B-transponder 28
3.3 Attaching the activity meters to the neckband 31
3.3.1 Wrong way of attaching the activity meter to the neckband 31
3.3.2 Correct way of attaching the activity meter to the neckband 35

4 Start up 37
4.1 Starting up the activity meter system with DelPro 5 and DelPro 10 AWE 37
4.2 Starting up the activity meter system with DelPro 6 and DelPro 10 NTP 40
4.3 Activating the activity meters 45
4.3.1 Activating the activity meters manually 45
4.3.2 Automatic activation of the activity meters 46
4.4 Matching activity meters with animals in DelPro 46
4.4.1 Assigning an activity meter manually 47
4.4.2 Assigning an activity meter automatically 48

© DeLaval 2024

5 Troubleshooting 49
5.1 The AM2 does not work from start ... 49
5.2 The AM2 works for some time but then stops working. The activity tester indicates NOT OK ... 49
5.3 The AM2 works for some time but then stops creating activity graphs. The activity tester indicates OK ... 49
5.4 The AWR does not receive any signals ... 49
5.5 Several cows do not show activity or very few activity messages are received ... 50
5.6 Cows are only showing zeros in graphs and reports ... 50
5.7 An activity meter number without a corresponding cow number shows up in **System** > **Activity performance** > **Unknown meters** ... 50
5.8 After an upgrade from ALPRO to DelPro, the system does not find cows in heat ... 51
5.9 An activity meter slowly gets bad data ... 51
5.10 A cow with an activity meter does not show any activity data in graphs or reports ... 51
5.11 Activity alarms come late ... 52
5.12 The heat alarms are missed ... 52
5.13 There are too many false alarms ... 53
5.14 The system works OK on cows but not on heifers or vice versa ... 53
5.15 There are pregnant or dry cows in the report ... 53
5.16 It is too difficult to interpret the graphics ... 54

6 Technical specifications 55
6.1 Technical data – AR2 ... 55
6.2 Technical data – AM2 ... 55
6.3 Technical data – AWR ... 55
6.4 Market access information ... 56
6.4.1 Warranty ... 56
6.4.2 US Statement Class B digital device: Information to the user (FCC) ... 56
6.4.3 US Statement (FCC) for Radio Equipment ... 56
6.4.4 RF exposure to Humans (FCC and ISED) ... 57
6.4.5 Canada Statement (ISED) Radio Equipment ... 57
6.4.6 Interference-Causing Equipment Standard (ICES-003) ... 57
6.4.7 Japan Statement (MIC) for Radio Equipment ... 57
6.4.8 China Statement (SRRC) for Radio Equipment ... 57
6.4.9 Regulatory compliance ... 57

7 Disposal 58
7.1 Disposal recommendations ... 58
7.2 Disposal of packaging ... 58
7.3 Disposal of waste electrical and electronic equipment ... 58

© DeLaval 2024

1 Safety precautions

1.1 Foreword

The safety and operating instructions must be observed by any person involved with the use or operation of this equipment.

Under no circumstances must the equipment be used if it is damaged or if the operation of the equipment is not completely understood.

MANDATORY!

Read the instructions

Read the instructions carefully before using the equipment. Contact a DeLaval representative if the instructions are not understood. Compliance with these instructions ensures the correct and safe use of the equipment. Keep the instructions for future reference.

1.2 Disclaimer

The information, instructions and parts listed are applicable and current on the date when issued. DeLaval reserves the right to make changes without notice.

1.3 Definitions of persons

Authorised electrician	A person with an education and practical experience in performing electrical work and installations; is considered as a skilled person in his/her area of work.
Ordinary person	A person who is neither a skilled person nor an instructed person. Ordinary persons include not only users of the equipment but all persons who may have access to the equipment. Children are not considered ordinary persons.
Instructed person	A person who has received instruction and training or is supervised by a skilled person is thereby able to perceive risks and avoid dangers that, for example, electricity and moving parts can pose.
Skilled person	A person who is capable of making correct judgements on tasks to be performed on the equipment. First and foremost, this means recognising possible hazards based on professional training, experience and knowledge of the equipment.

Authorised service personnel are skilled persons who work with DeLaval technology.

1.4 Definitions of admonishments

Admonishments are safety-related warning messages.

Admonishments provide important information intended to prevent incorrect or hazardous use of equipment, machinery or software, and support risk assessment.

The following list defines the different types of admonishments used in DeLaval documentation:

© DeLaval 2024

Warning		Refers to imminent, severe or limited risk. Failure to comply with instructions may result in a serious injury.
Mandatory		Refers to an action or behaviour which is essential to the safe and successful use of the equipment.
Prohibited		Refers to an action or behaviour which is incompatible with the safe and successful use of the equipment.

Note:

"Note" is intended to draw attention to specific points of importance in the text and advice to prevent equipment damage.

This symbol signals risk of injury.

This symbol signals risk of electric shock.

1.5 General safety warnings

WARNING!

Intended use

Do not use the equipment for any other purposes than the intended use, failure to comply may result in injury or equipment damage.

© DeLaval 2024

2 General description

2.1 Overview of the DeLaval activity meter system

This instruction book covers specifically the DeLaval activity meter AM2 and the DeLaval activity receiver AR2. For information on how to use the activity meter system in the farm management system, see the instruction books for DelPro software.

The DeLaval activity meter system is a wireless, electronic heat detection system for cows and heifers approaching heat.

The purpose of the DeLaval activity meter system is to alert the farmer when an animal becomes:

- More active than normal, which usually indicates that the animal is in heat.
- Less active than normal, indicating that the animal may have a health issue and needs to be checked.

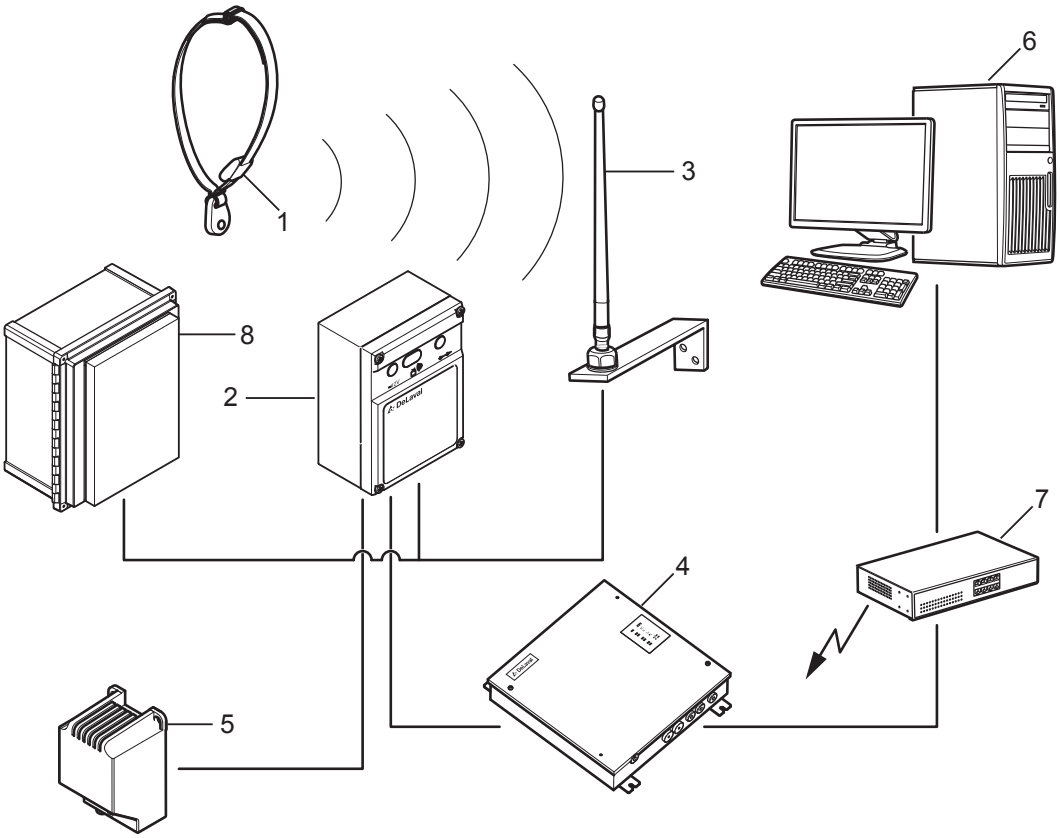

Fig. 1: The main components of the activity meter system.

1 *DeLaval activity meter AM2*
2 *DeLaval activity receiver AR2/repeater*
3 *Antenna*
4 *System controller with ALPRO WE*
5 *Transformer*
6 *PC with DelPro software*
7 *Router*
8 *DeLaval activity wireless repeater AWR*

© DeLaval 2024

2.2 Overview of the DeLaval activity meter AM2

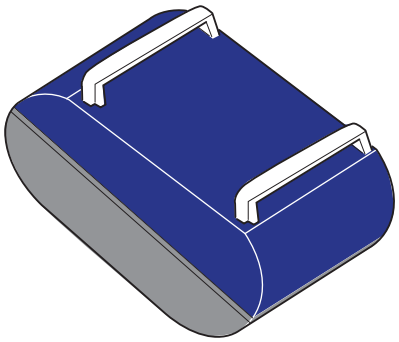

Fig. 2: The DeLaval activity meter AM2.

Note:

To visually distinguish the AM2 from previous generations of activity meters, the cover has a blue/grey colour combination.

Note:

Never clean the activity meter in a washing machine.

Main functions of the DeLaval activity meter AM2:

- Activity sensor:

  A digital accelerometer provides accurate motion detection. The all-electronic implementation improves reliability and quality of the product.
- Start-up activated by DeLaval ID reader:

  The DeLaval activity meter AM2 is activated (enters **ON** mode) automatically when exposed to a 131/134 kHz DeLaval ID reader signal. Either as the cow passes a DeLaval ID reader, or manually by bringing the AM2 close to a reader.
- Automatic shut-off:

  The AM2 automatically shuts off after 48 hours of inactivity (all zero activity for 48 hours).
- RF communication protocol:

  A high speed, multi-channel RF (radio frequency) communication protocol is used to improve system capacity (maximum number of cows with AM2) and to improve immunity to RF noise and interference.
- Internal lithium battery:

  Battery life time is up to 10 years depending on the temperatures the AM2 is exposed to.

Optional accessory for the DeLaval activity meter AM2:

- Activity meter protection:

  Activity meter protection is available for farms that have problems with activity meters getting worn down by the feeding tables and the head lock.

© DeLaval 2024

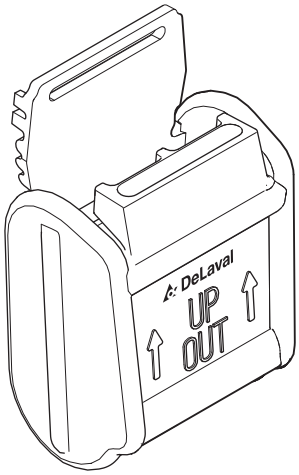

Fig. 3: The activity meter protection.

2.3 Overview of the DeLaval activity receiver AR2

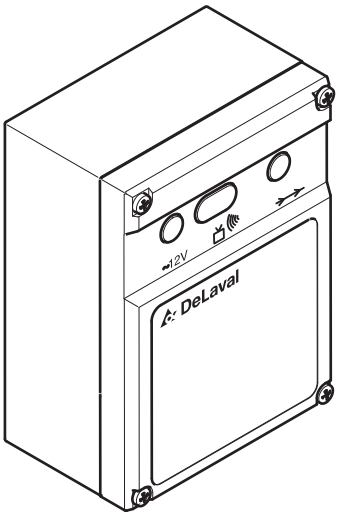

Fig. 4: The DeLaval activity receiver AR2.

Note:

To visually distinguish the AR2 from previous generations of activity receivers, the front label has a DeLaval logo.

Main functions of the DeLaval activity receiver AR2:

- RF communication protocol:

© DeLaval 2024

AR2 supports the AM2 radio protocol.

- Activity repeater:

  It supports the activity repeater function.
- RF range:

  The AM2 to AR2 communication range is typically 200 m line of sight (no trees, hills, walls or buildings etc.), outdoors and 75 m indoors depending on the barn interior. Many pillars and walls in the barn decrease the range.

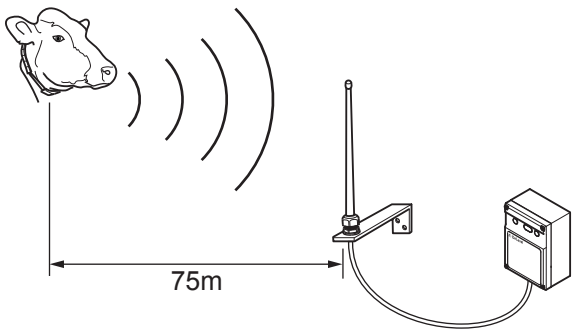

Fig. 5: The maximum reading distance from the AM to the receiver indoors.

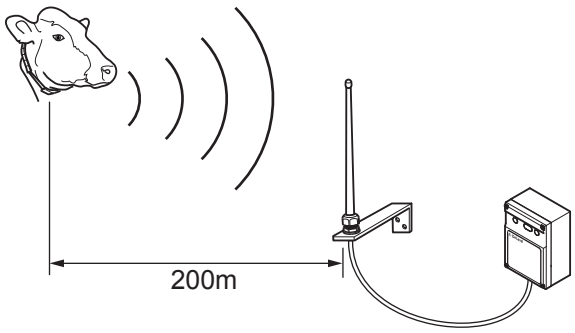

Fig. 6: The maximum reading distance from the AM to the receiver outdoors.

Related topics:

- Activity repeater function (optional)

2.3.1 LED indications for AR2: receiver function

- The green LED (A) is constantly lit when electrical power is on.
- The yellow LED (C) is lit when the activity receiver sends or receives a message on the ALCOM bus.
- The red LED (B) is lit when there is internal communication in the activity receiver; that is, when a message is received from the antenna.

Note:

If an unrecoverable fault is identified, the red LED remains lit until the fault has been solved.

- The green (A) and red LEDs (B) blink during the AR2 software update.

© DeLaval 2024

If the activity receiver receives a message and finds it correct (after validity check), the red LED (B) first flashes once and then the yellow LED (C) flashes once.

There are also messages received that are not sent on the ALCOM bus. In this case, there is a red LED (B) flash only.

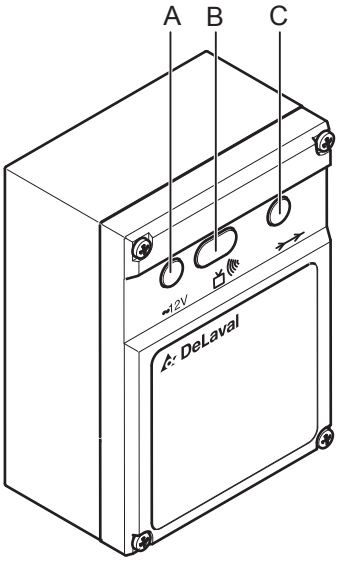

Fig. 7: The front panel LEDs on the AR2.

A *Green LED*
B *Red LED*
C *Yellow LED*

2.3.2 LED indications for AR2 operating as a repeater

- The green LED (A) flashes at 1 Hz (once per second) when the power supply is correct.
- After the repeater is powered on, it checks radio connectivity by transmitting a test message every five seconds for five minutes.
  - The red LED (B) flashes when the test message is sent.
  - The yellow LED (C) flashes when the test message is acknowledged by an AR2 connected to the ALCOM bus.

© DeLaval 2024

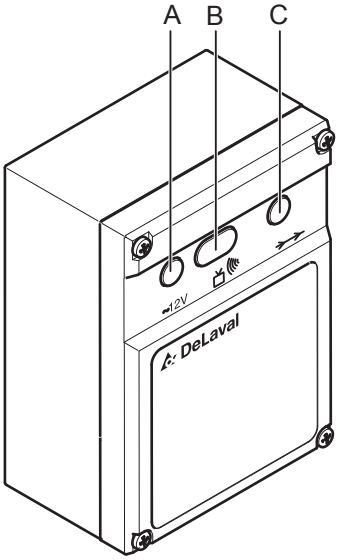

Fig. 8: The front panel LEDs on the AR2.

A *Green LED*
B *Red LED*
C *Yellow LED*

2.4 Activity repeater function (optional)

Note:

This is an optional function for farm installations that are limited by the maximum length of the ALCOM bus cable.

The activity receiver operating as a repeater, forwards the AM2 activity information received every 15 minutes (as the same message) and every hour (as a new message) in addition to the triggered sending when passing a portal reader. The repeater function is activated by manual configuration of the activity receiver AR2.

For grasslands and heavy duty or large herd farms, it is possible to use up to three activity receiver AR2 units operating in repeater mode. The distance can be up to 800 m (for 433 MHz and 500 m for 418 MHz option) between units to ensure a large reading area.

Note:

It is recommended to install the activity receiver in repeater mode under a roof with the main power supply.

Note:

The repeater function always requires at least one AR2 within range that is connected to the ALCOM bus.

© DeLaval 2024

Note:

The AR2 and the activity receiver/s operating in repeater mode, must be installed line of sight. Pillars, walls or trees decrease the range.

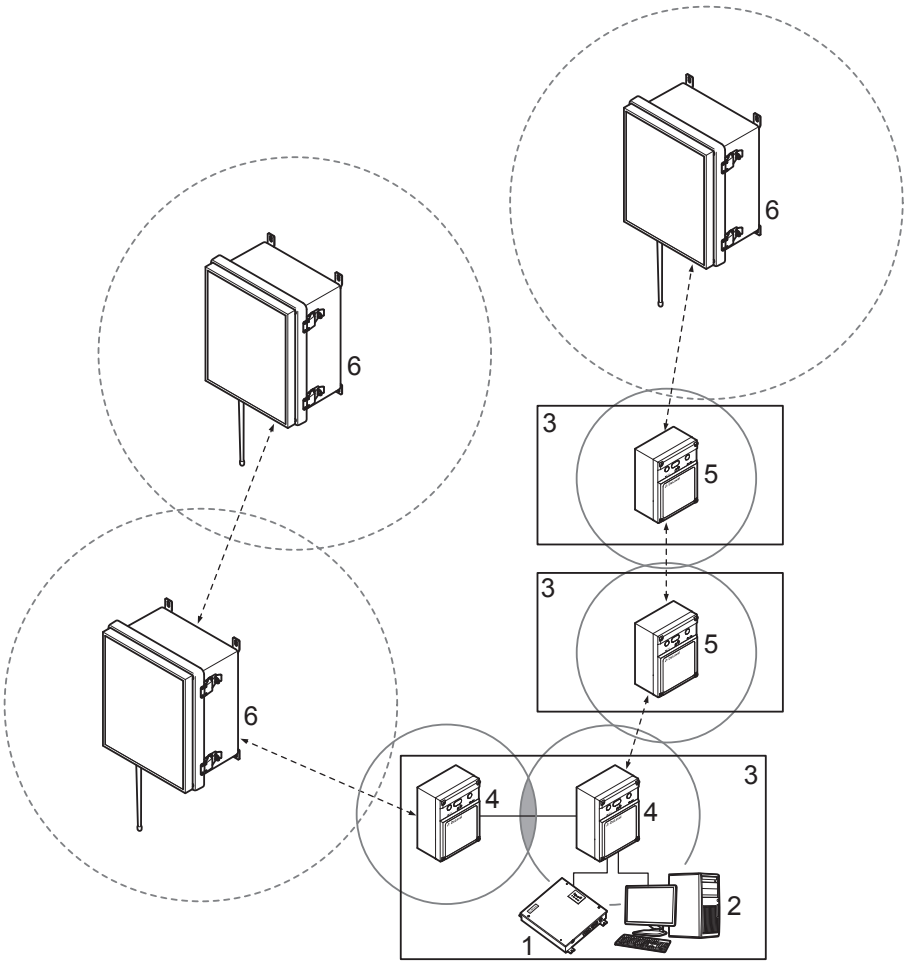

Fig. 9: Example layout of the activity repeater function.

1 *System controller*	***4*** *DeLaval activity receiver AR2*
2 *PC with DelPro software*	***5*** *DeLaval activity receiver AR2 operating as a repeater*
3 *Barn*	***6*** *DeLaval activity wireless repeater AWR*

Related topics:

- Overview of the DeLaval activity receiver AR2

2.5 DeLaval activity wireless repeater AWR with solar panel

The solar cell panel transforms sun energy into electricity that powers the DeLaval activity wireless repeater AWR. The AWR is equipped with a rechargeable battery.

© DeLaval 2024

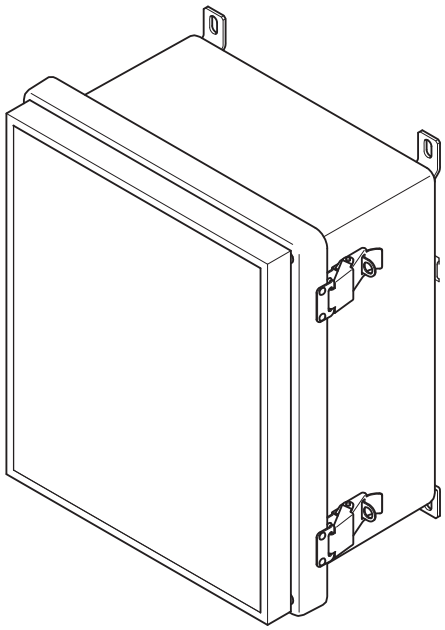

Fig. 10: The DeLaval activity wireless repeater AWR with solar panel and battery.

2.5.1 LED indications for AWR

If the battery in the AWR is low, the green LED (A) on the AR2 flashes at 0.33 Hz (once every three seconds).

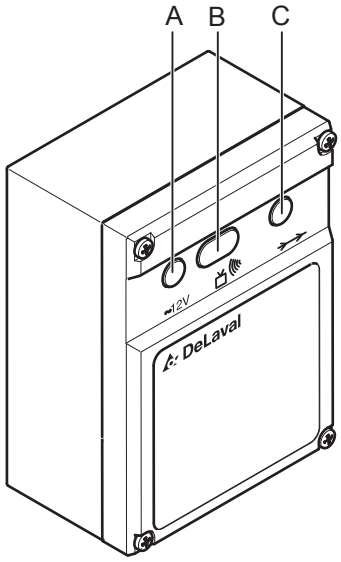

Fig. 11: The front panel LEDs on the AR2.

A *Green LED*
B *Red LED*
C *Yellow LED*

© DeLaval 2024

2.6 Functions of the activity meter system components

- The activity meter AM2 contains a sensor which detects movements. The movements are aggregated into an activity level. The activity level data is continuously collected and transmitted to the activity receiver every 15 minutes. Every data transmission contains activity data covering the latest 24-hour period.
- The activity receiver AR2 is the link between the activity meters and the system controller, where data from the activity meter is processed. The activity receiver receives the radio signal from the activity meter via the antenna. The received message is checked for validity, and then it is transmitted over the ALCOM bus to the system controller.
- The system controller collects and stores all incoming activity data. Its main task, for heat detection purposes, is to process the activity data into high activity alarms.
- A PC that runs with DelPro software, reads and stores the processed activity information from the system controller and presents it in graphs and reports.

2.6.1 Models to analyse collected data

The main purpose of the system is monitoring cow behaviour and how much it differs from the previous day.

There are two models to analyse collected data, taking into consideration two types of cow behaviour (with regular life path and without it):

- High activity model
- Relative activity model

2.6.1.1 High activity model

The high activity model is based on six-hour blocks and the average is calculated for them.

Then the average is used in the formula to calculate the level of high activity. The formula compares the recent activity level of the cow to the activity level of the previous days at the same time of the day. This calculation is made for every hour.

$$z_n = x_n - x_{n-1} + k_n \cdot \left(x_{n-1} - x_{n-2} + k_{n-1} \cdot \left[x_{n-2} - x_{n-3} \cdot k_{n-2}\left(x_{n-3} - x_{n-4} + O(x_{n-4})\right)\right]\right)$$

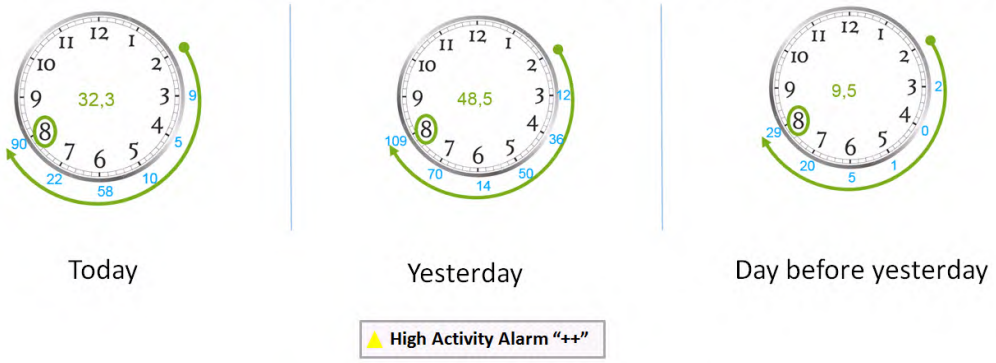

Fig. 12: The formula to calculate the high activity model.

Based on a high activity level, the formula calculates the standard deviation. The heat alarms must be as significant as possible, and the number of false alarms must be minimized. Only the values with a big deviation from the average are considered.

The default value for alarms are set up:

- **+**: the cow has to move at least 3.8 times more than previous days.

© DeLaval 2024

- **++**: the cow has to move at least 5 times more than previous days.
- **+++**: the cow has to move at least 6 times more than previous days.

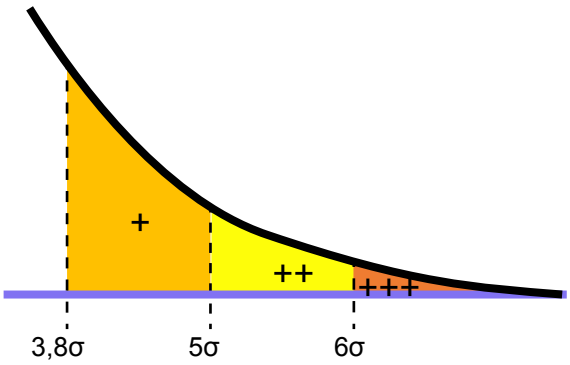

Fig. 13: Alarm values.

To adjust the alarm settings in DelPro:

- In DelPro 5 and DelPro 10 AWE, go to **Device** > **Alpro WE-Activity System**.
- In DelPro 6 and DelPro 10 NTP, go to **Devices** > **Activity system**.

The **Accuracy** window appears where it is possible to change accuracy levels for alarms.

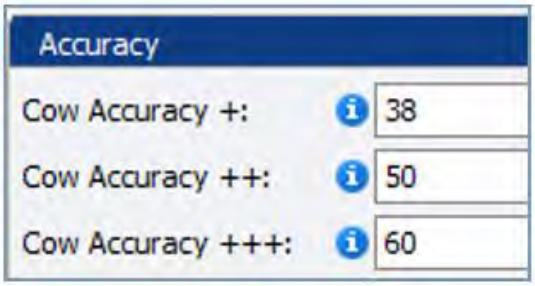

Fig. 14: Accuracy level for alarms.

Note:

The higher the number of "+", the higher the accuracy of the alarm.

Note:

Only the "+" value needs to be changed to see the impact of the changes.

2.6.1.2 Relative activity model

Every hour, the average activity level of the last 24 hours of each cow is compared to the similar 24-hour periods of the previous days. This parameter is called **Relative Activity**.

When the relative activity goes above the defined threshold, the cow appears on the reports "Cow to breed", "Heifer to breed" and "Cow and Heifer to Breed".

The relative activity model information is complementary to high activity alarms.

© DeLaval 2024

Fig. 15: The relative activity model.

2.7 Co-existence and compatibility with the previous generation activity meter system

The AM2 and the previous generations of activity meters can be mixed at the farm, considering a few prerequisites:

- The activity meter AM2 always requires an AR2 receiver with antenna. When introducing AM2 meters, one or more AR2 receivers must be installed.

> **Note:**
> It is recommended to install the AR2 close to existing activity receivers to share the existing ALCOM bus and power supply, but not so close that they disturb each other.

> **Note:**
> If installed on a pole, it is recommended to install the AR2 on each side of the pole.

- The AR2 ALCOM node ID address must be sequential and start higher or lower than the existing receivers.
- A 131/134 kHz DeLaval ID reader is required to start up the AM2. If there is no DeLaval ID reader available, a Handheld ID reader can be used for manual start up.

> **Note:**
> A competitor ID system, which is reading HDX, also activates the AM2.

- Radio frequency channels:

  The AM2 and the AR2 use different, multiple radio channels. Thereby, AM2 co-exists with the previous generation's activity meters without radio interference.

© DeLaval 2024

- AR2 compatibility on the ALCOM bus:

  The AR2 is by default (from the factory) configured in an ALCOM backwards-compatible mode. Activity messages received from AM2 meters are converted to a legacy message format. The 24-bit unique AM2 serial number is truncated to a 16-bit ID (0-65535).
- ALPRO WE/DelPro compatibility:

  In backwards-compatible mode, the DelPro and ALPRO WE systems process activity data from the AM2 in the same way as the previous generation system. The farm management system is not aware of the activity meter version.

Note:

The AR2 does not support activity meters of the previous generation.

Note:

The AR2 does not support download of previous RFI SW versions.

Note:

A magnet cannot be used for manual start up or turn off of the AM2.

Note:

The activity meter tester cannot be used with the AM1.

© DeLaval 2024

3 Installation

3.1 Assembling a neckband with an activity meter and a B-transponder

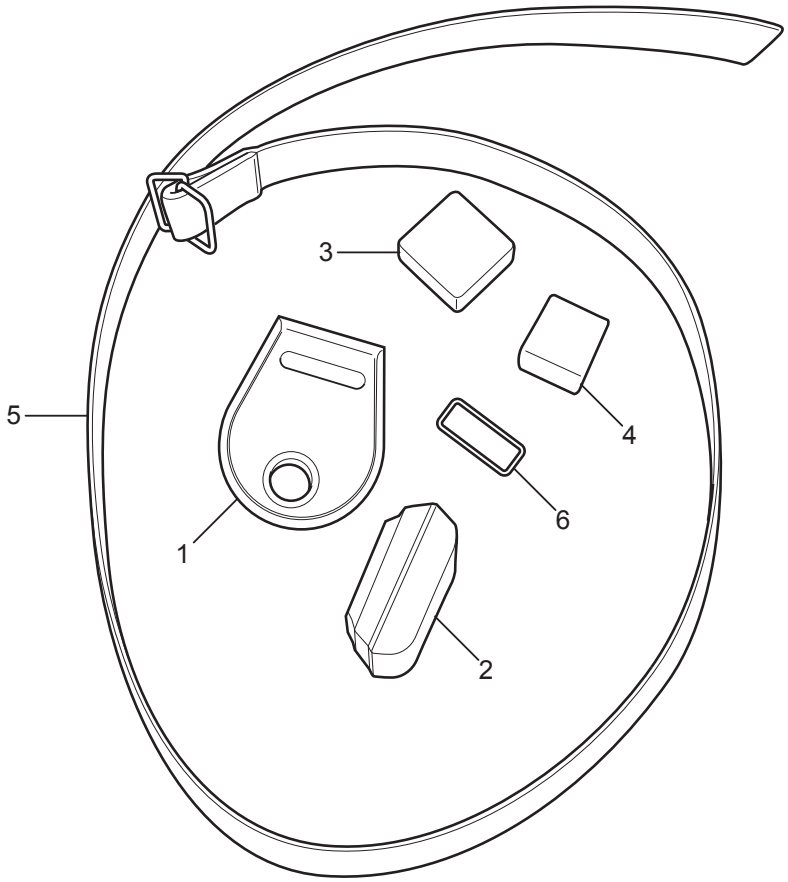

Fig. 16: The components for a neckband with a B-transponder.

1 *B-transponder*	***4*** *Buckle for the end of the neckband*
2 *Activity meter*	***5*** *Neckband*
3 *Activity clip/spacer*	***6*** *Metal ring*

When installing the activity meter (2) on the neckband (5) with a B-transponder (1), an activity clip/spacer (3) is needed. The buckle (4), which is included with the neckband, secures the loose end of the neckband. There are two ways of assembling the neckband with the activity meter. It can be assembled with or without the number plates.

3.1.1 Attaching the activity meter to a neckband with a B-transponder

1. Thread the metal ring (A) onto the neckband.

© DeLaval 2024

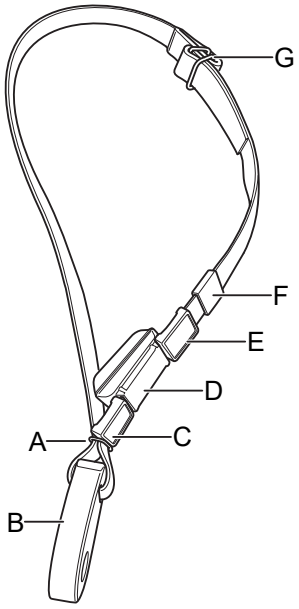

Fig. 17: The neckband with the activity meter and the B-transponder.

2. Thread the B-transponder (B) onto the neckband.
3. Pull the neckband through the metal ring (A) to secure the B-transponder (B).

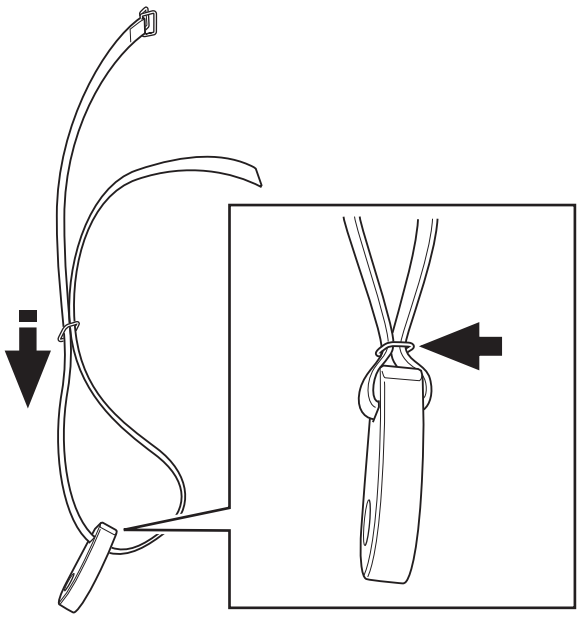

Fig. 18: Securing the B-transponder.

4. Thread the activity clip/spacer (C) onto the neckband.
5. Thread the activity meter (D) onto the neckband.

Note:
Make sure that the thickest part of the activity meter is pointing downwards.

© DeLaval 2024

Note:

Make sure that the activity meter is on the inside of the neckband to prevent it from being worn out.

6. Optionally, thread a second activity clip/spacer (E) above the activity meter to prevent it from wandering upwards on the neckband.

Note:

All activity kits that include a neckband also contain an activity clip/spacer.

7. Thread the buckle (F) onto the neckband.
8. Fold the end of the neckband (G) through the rings.

Note:

Make sure that the end of the neckband is on the inside.

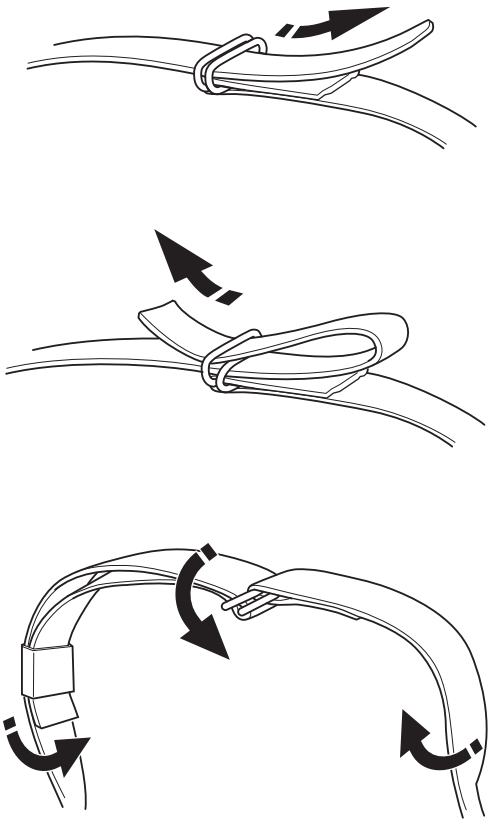

Fig. 19: Folding of the neckband through the rings.

© DeLaval 2024

3.1.2 Attaching the activity meter to a neckband with a B-transponder and number plates

1. Thread the number plates (A) onto the neckband.

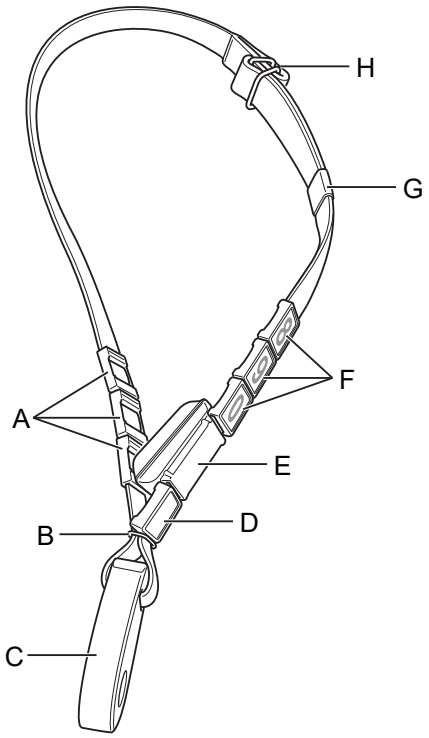

Fig. 20: The neckband with the activity meter, the B-transponder and the number plates.

2. Thread the metal ring (B) onto the neckband.
3. Thread the B-transponder (C) onto the neckband.
4. Fold the neckband through the metal ring (B) to secure the B-transponder (C).

© DeLaval 2024

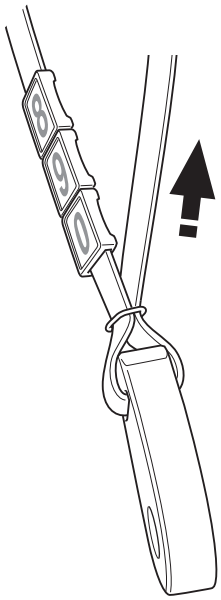

Fig. 21: Securing the B-transponder.

5. Thread the activity clip/spacer (D) onto the neckband.
6. Thread the activity meter (E) onto the neckband.

Note:
Make sure that the thickest part of the activity meter is pointing downwards.

Note:
Make sure that the activity meter is on the inside of the neckband to prevent it from being worn out.

7. Thread the number plates (F) onto the neckband.
8. Thread the buckle (G) onto the neckband.
9. Fold the end of the neckband (H) through the rings.

Note:
Make sure that the end of the neckband is on the inside.

© DeLaval 2024

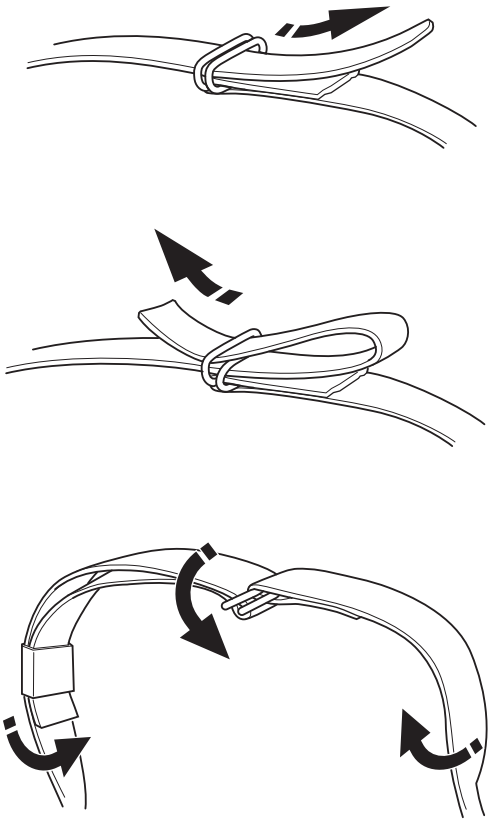

Fig. 22: Folding of the neckband through the rings.

© DeLaval 2024

3.2 Assembling a neckband with an activity meter and without a B-transponder

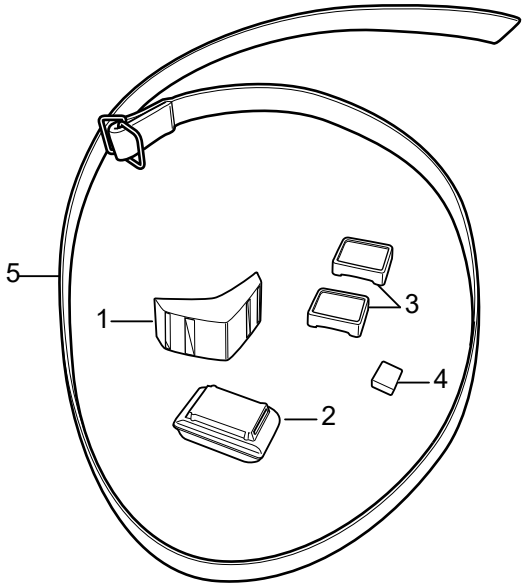

Fig. 23: The components for a neckband without a B-transponder.

1 *Counterweight*
2 *Activity meter*
3 *Two activity clips (spacers)*
4 *Buckle for the end of the neckband*
5 *Neckband*

Always use a counterweight (1) when the activity meter (2) is used without a B-transponder. Its purpose is to hold the activity meter closer to the neck of the animal and to protect the activity meter from wear.

3.2.1 Attaching the activity meter to a neckband without a B-transponder

1. Pull the neckband through the holes (A) of the counterweight (B).

© DeLaval 2024

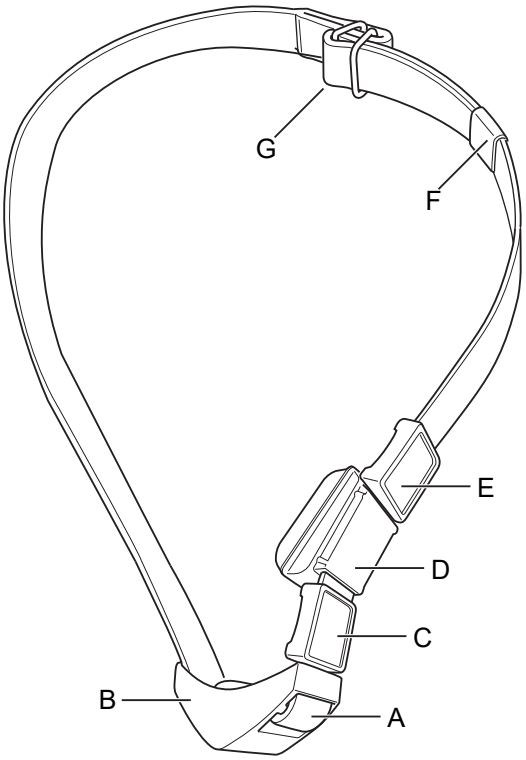

Fig. 24: The neckband with the activity meter and the counterweight.

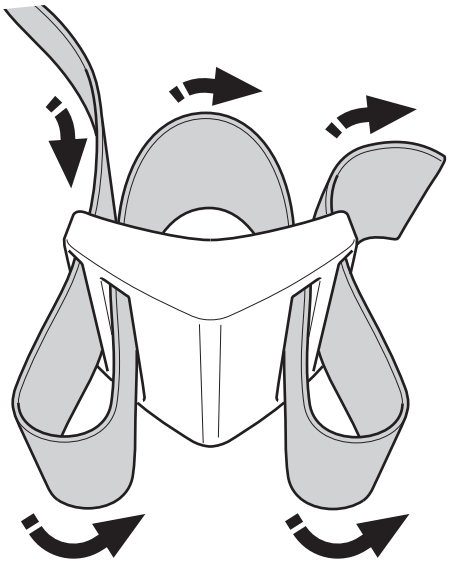

Fig. 25: Pulling the neckband through the counterweight.

2. Place the counterweight (B) at the centre of the neckband.
3. Thread one spacer (C) onto the neckband.

© DeLaval 2024

4. Thread the activity meter (D) onto the neckband.

> **Note:**
> Make sure that the thickest part of the activity meter is pointing downwards.

> **Note:**
> Make sure that the thick part of the activity meter is on the inside of the neckband to prevent wear.

5. Thread another spacer (E) onto the neckband.
6. Thread the buckle (F) onto the neckband.
7. Fold the end of the neckband (G) through the rings.

> **Note:**
> Make sure that the end of the neckband is on the inside.

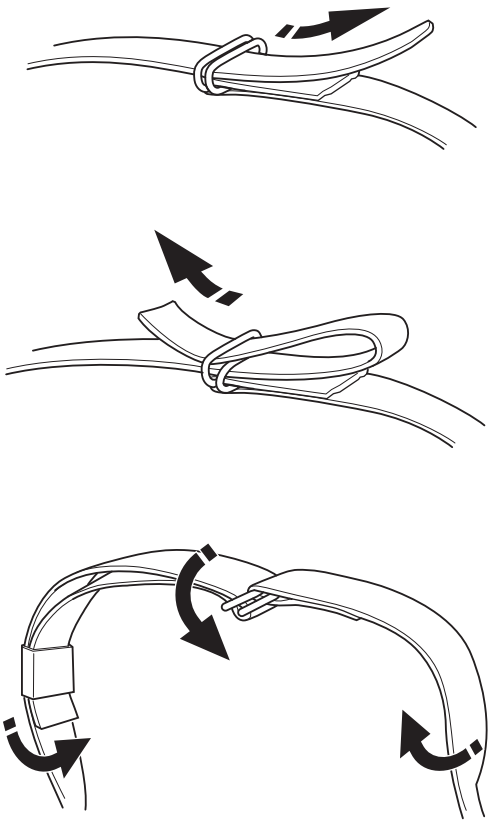

Fig. 26: Folding of the neckband through the rings.

© DeLaval 2024

3.2.2 Attaching the activity meter to a neckband with number plates and without a B-transponder

1. Thread the number plates (A) onto the neckband.

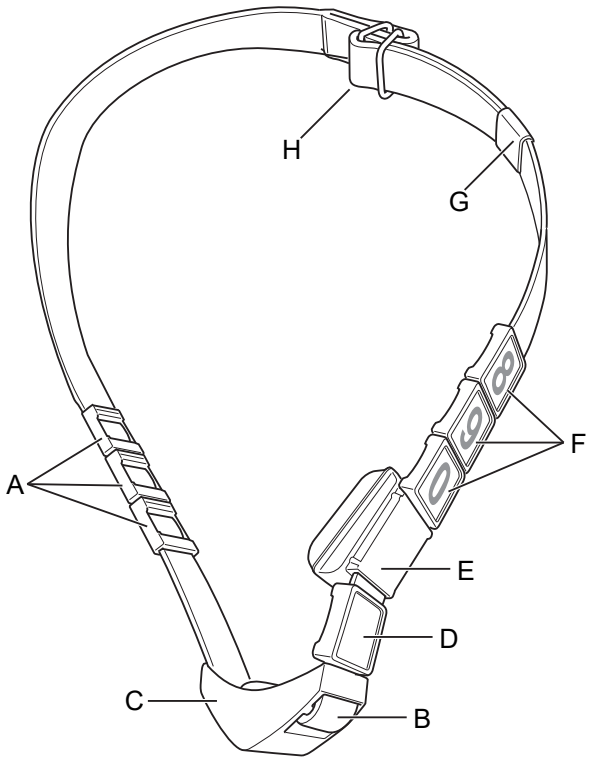

Fig. 27: The neckband with the activity meter, the counterweight and the number plates.

2. Pull the neckband through the holes (B) of the counterweight (C).

© DeLaval 2024

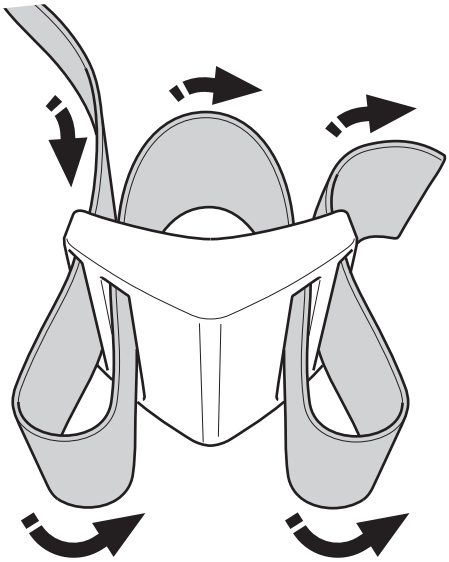

Fig. 28: Pulling the neckband through the counterweight.

3. Place the counterweight (C) at the centre of the neckband.
4. Thread one spacer (D) onto the neckband.
5. Thread the activity meter (E) onto the neckband.

Note:
Make sure that the thickest part of the activity meter is pointing downwards.

Note:
Make sure that the thick part of the activity meter is on the inside of the neckband to prevent wear.

6. Thread the number plates (F) onto the neckband.
7. Thread the buckle (G) onto the neckband.
8. Fold the end of the neckband (H) through the rings.

Note:
Make sure that the end of the neckband is on the inside.

© DeLaval 2024

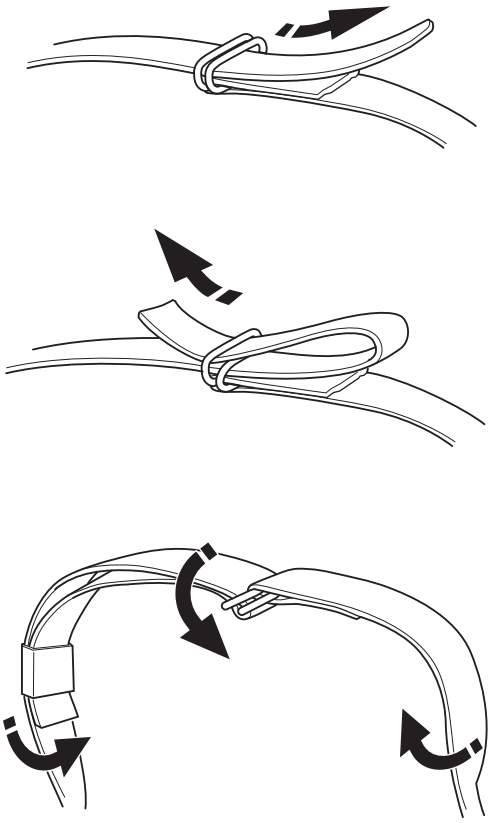

Fig. 29: Folding of the neckband through the rings.

© DeLaval 2024

3.3 Attaching the activity meters to the neckband

3.3.1 Wrong way of attaching the activity meter to the neckband

Fig. 30: The collar is too loosely attached to the cow's neck and the AM is too close to the B-transponder.

Fig. 31: Incorrect AM position, no weight on the collar.

© DeLaval 2024

Fig. 32: Incorrect AM position, no weight on the collar.

Fig. 33: AM is placed too high on the cow's neck.

© DeLaval 2024

Fig. 34: Rolled collar, AM worn with wrong side.

Fig. 35: Incorrect weight placement.

© DeLaval 2024

Fig. 36: The collar is fastened too tightly, the collar is rolled up. The fastener should be on the nape of the neck.

Fig. 37: Incorrect position of the metal ring.

© DeLaval 2024

3.3.2 Correct way of attaching the activity meter to the neckband

© DeLaval 2024

Note:

If a collar is attached too loosely around the neck of the cow, the system will overestimate the activity of the cow.

Note:

Attach the grey part of the activity meter towards, and in contact with, the neck of the cow. It protects the electronic gear. Keep the meter in contact with the body of the cow, as it prolongs the battery lifetime.

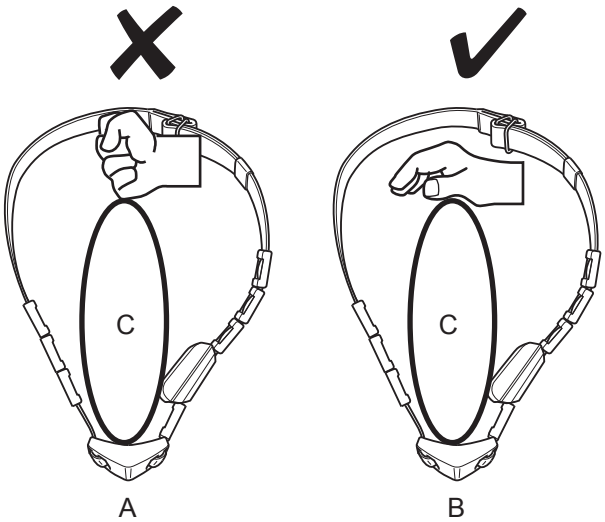

Fig. 38: Placing the neckband on the cow's neck.

A *Incorrect placement of the neckband*
B *Correct placement of the neckband*
C *Cow's neck*

© DeLaval 2024

4 Start up

4.1 Starting up the activity meter system with DelPro 5 and DelPro 10 AWE

1. In the **Devices** window, right-click the **ALPRO WE** device and go to **New** > **Activity system**.

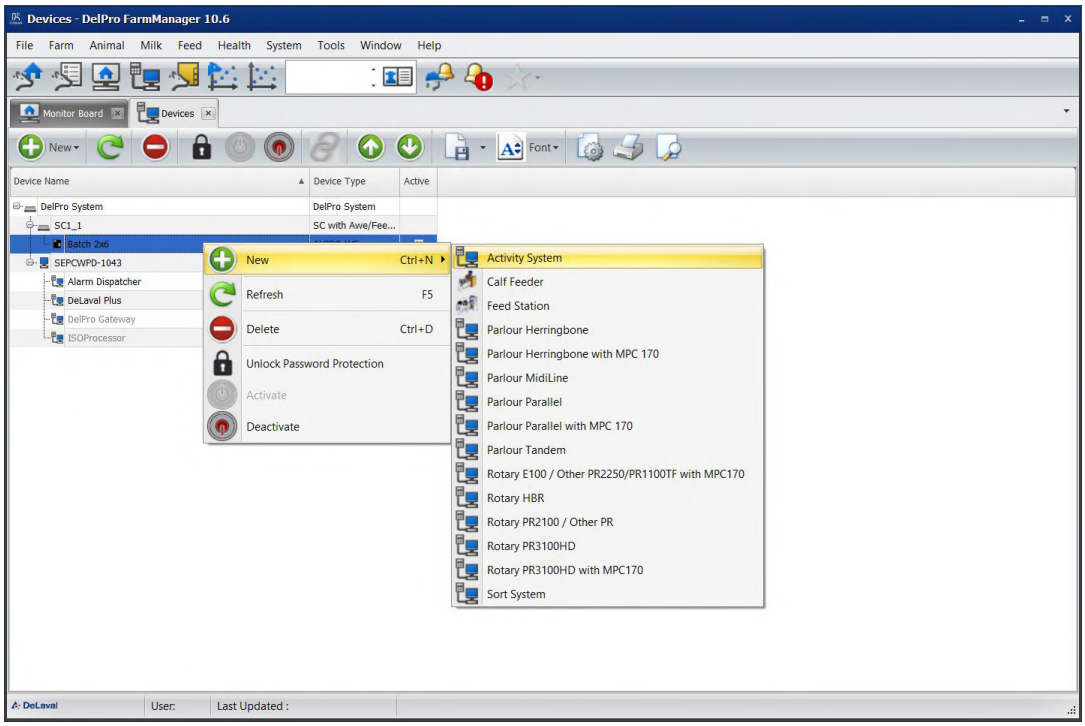

Fig. 39: Adding an **Activity System** device.

→ The **Activity System** window opens.

2. In the **Activity Receiver Start Address** box, enter a start address.

© DeLaval 2024

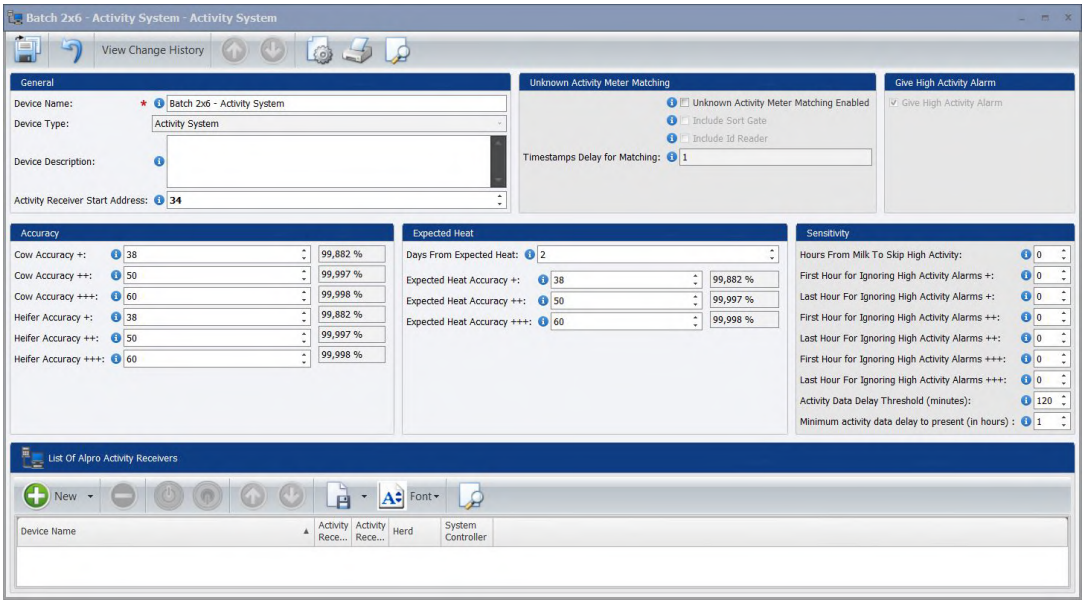

Fig. 40: Adding a start address.

3. Click **Save**.

4. In the **Devices** window, double-click the **Activity System** device to open the **Activity System** window.

5. In **List Of Alpro Activity Receivers**, click **New** to add an activity receiver.

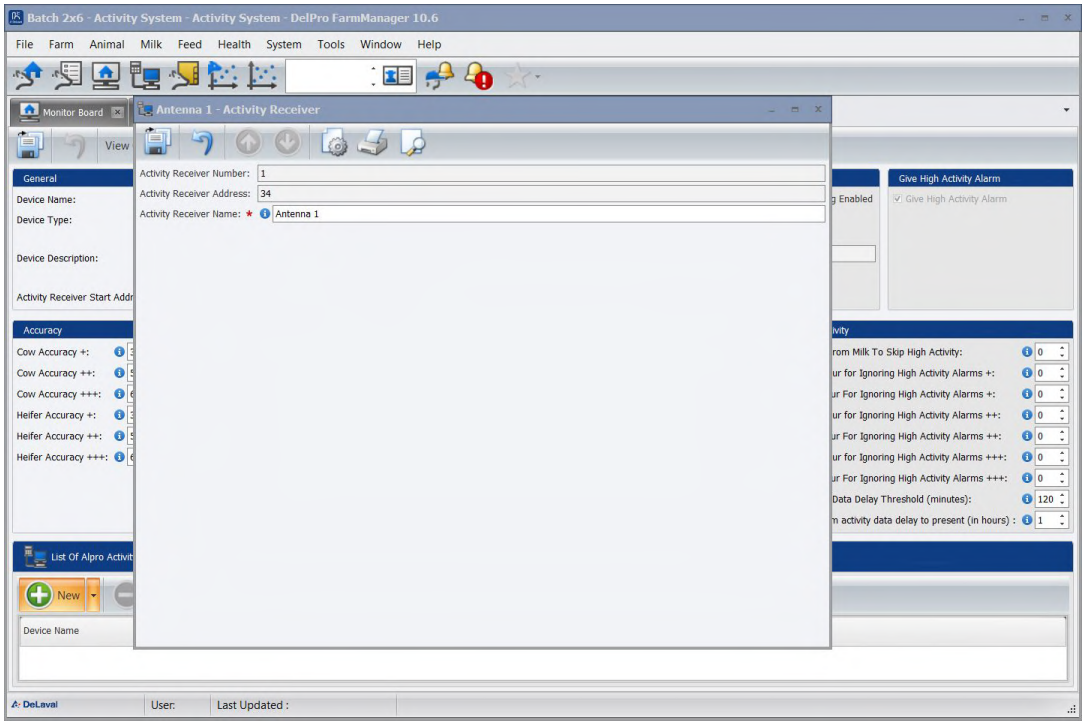

Fig. 41: Adding an activity receiver.

→ The **Activity Receiver** window opens.

6. In the **Activity Receiver** window, click the **Save** icon.

© DeLaval 2024

→ The activity receiver is added to **List of Alpro Activity Receivers**.

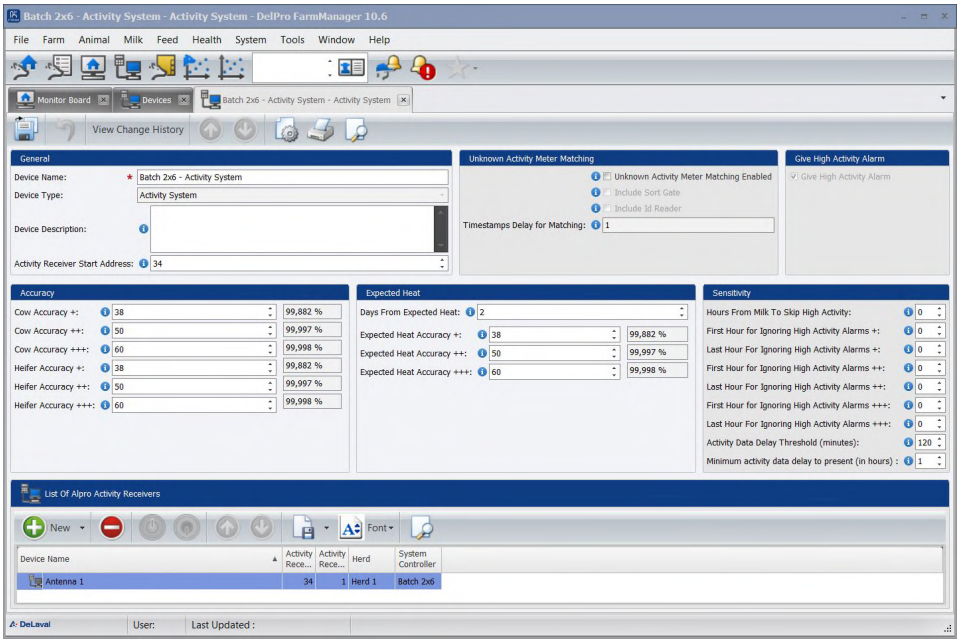

Fig. 42: The **Activity System** window.

7. If needed, add more activity receivers.

8. When all activity receivers are added, click **Save** to close the **Activity system** window.
   → The **Activity System** device is automatically activated.

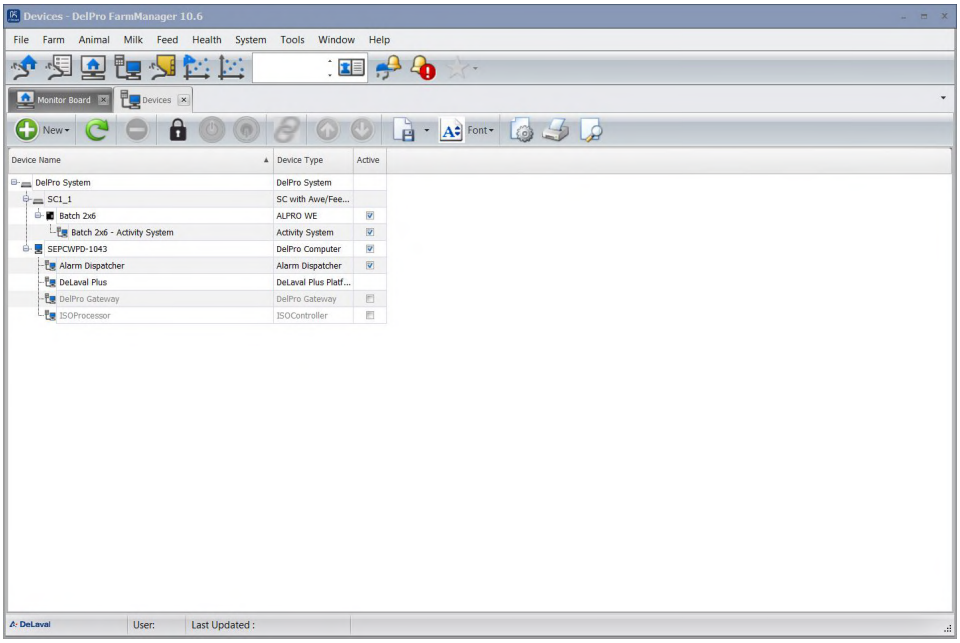

Fig. 43: The **Devices** window.

9. Activate the activity meters and attach them to the cows. See **Start-up** > **Activating the activity meters**.

© DeLaval 2024

Note:

It is recommended that the activity meter stays permanently attached to the cow.

10. Match the activity meter ID numbers to the cow numbers. See **Start-up** > **Matching activity meters with animals in DelPro**.

Related topics:

- Activating the activity meters
- Matching activity meters with animals in DelPro

4.2 Starting up the activity meter system with DelPro 6 and DelPro 10 NTP

1. In the **Devices** window, right-click the **Data Service** device and go to **New** > **Activity system**.

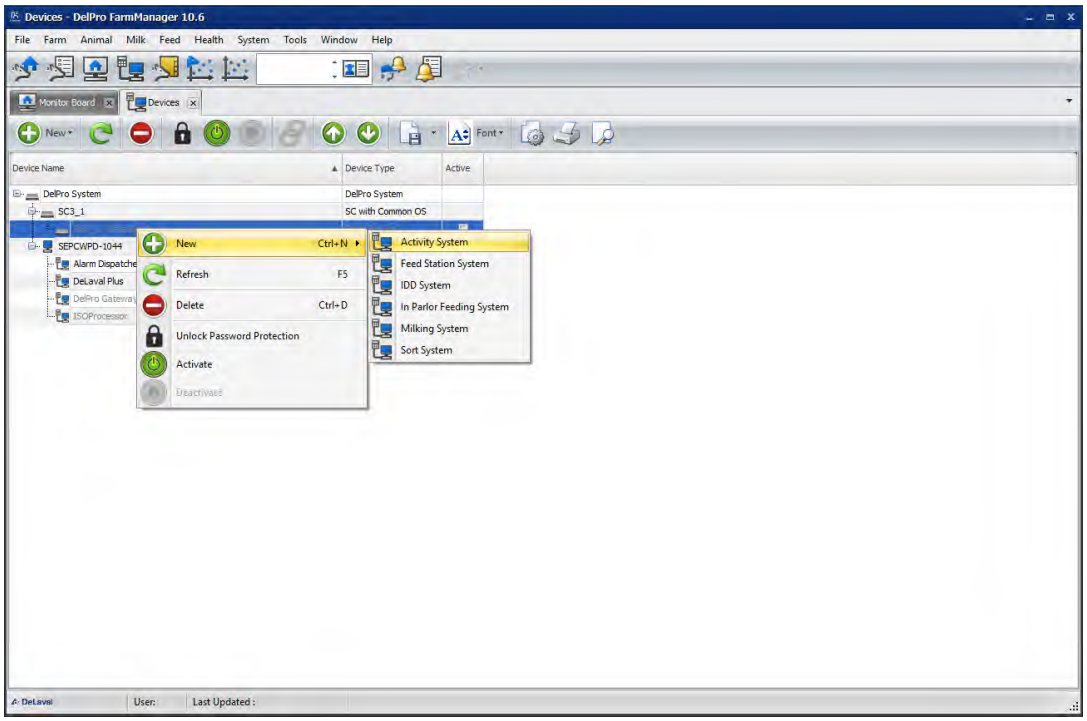

Fig. 44: Adding an activity system.

→ The **Activity System** window opens.

2. Click **Save** to close the **Activity System** window.

3. In the **Devices** window, right-click **Activity system** and go to **New** > **Activity device**.

© DeLaval 2024

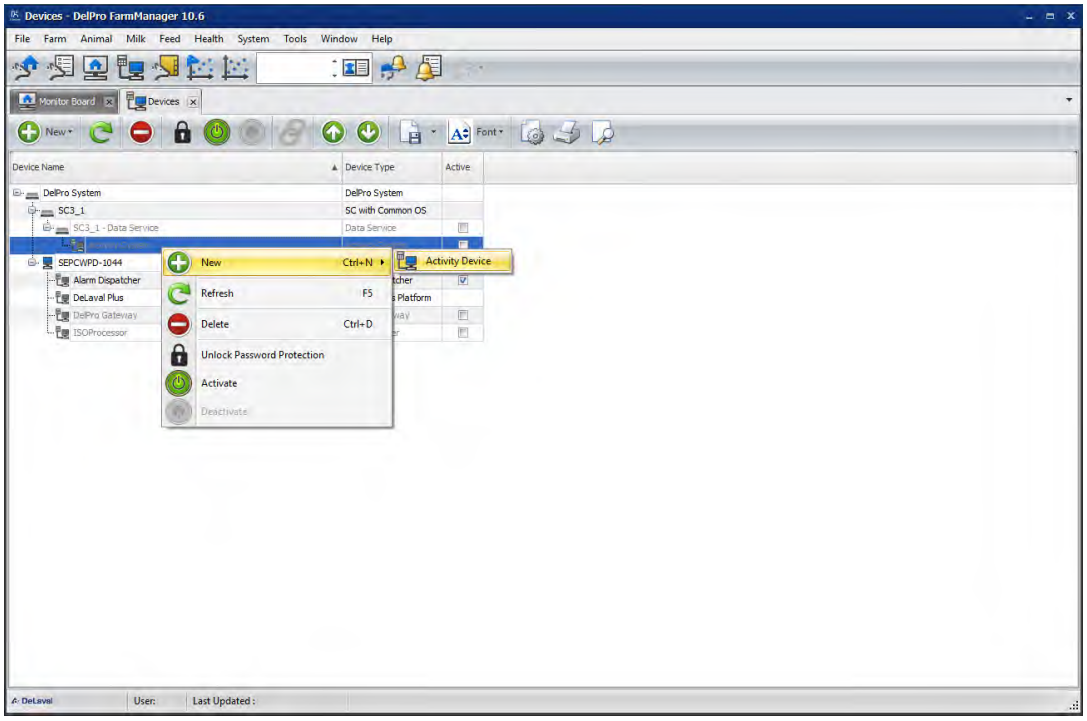

Fig. 45: Adding an activity device.

→ The **Activity device** window opens.

4. In **Activity Receiver Start Address**, enter a start address.
5. In **List of Activity Receivers**, click **New** to add an activity receiver.

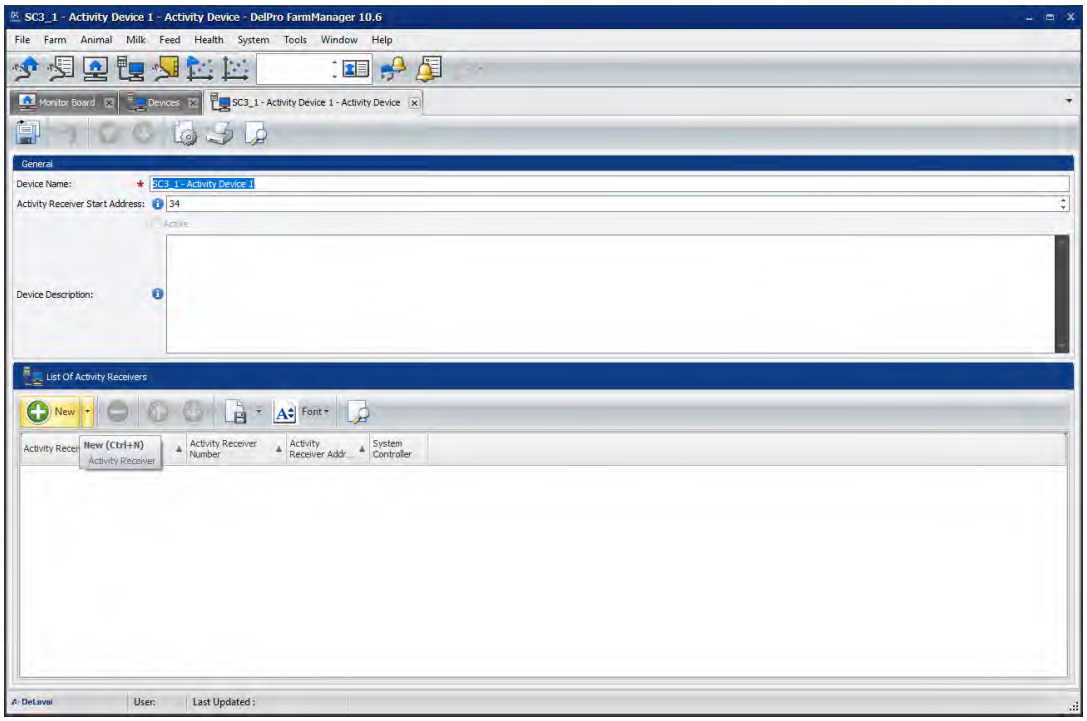

Fig. 46: Adding an activity receiver.

→ The **Activity Receiver** window opens.

6. In the **Activity Receiver** window, click the **Save** icon.
   → The activity receiver is added to **List of Activity Receivers**.

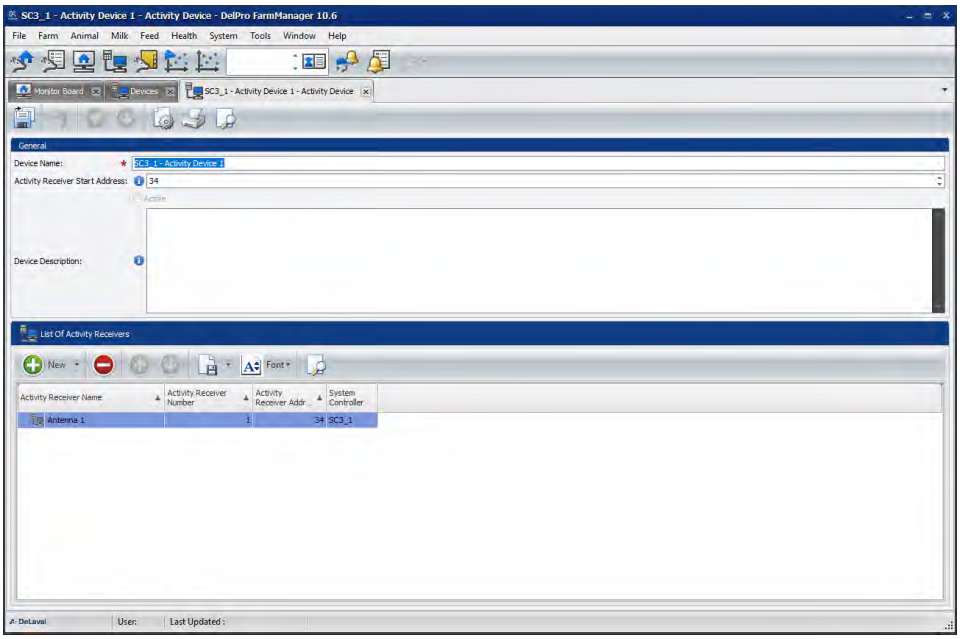

Fig. 47: The **Activity Device** window.

7. If needed, add more activity receivers.
8. When all activity receivers are added, click **Save** to close the **Activity Device** window.
9. In the **Devices** window, select **Activity System** and then click the **Activate** icon.

© DeLaval 2024

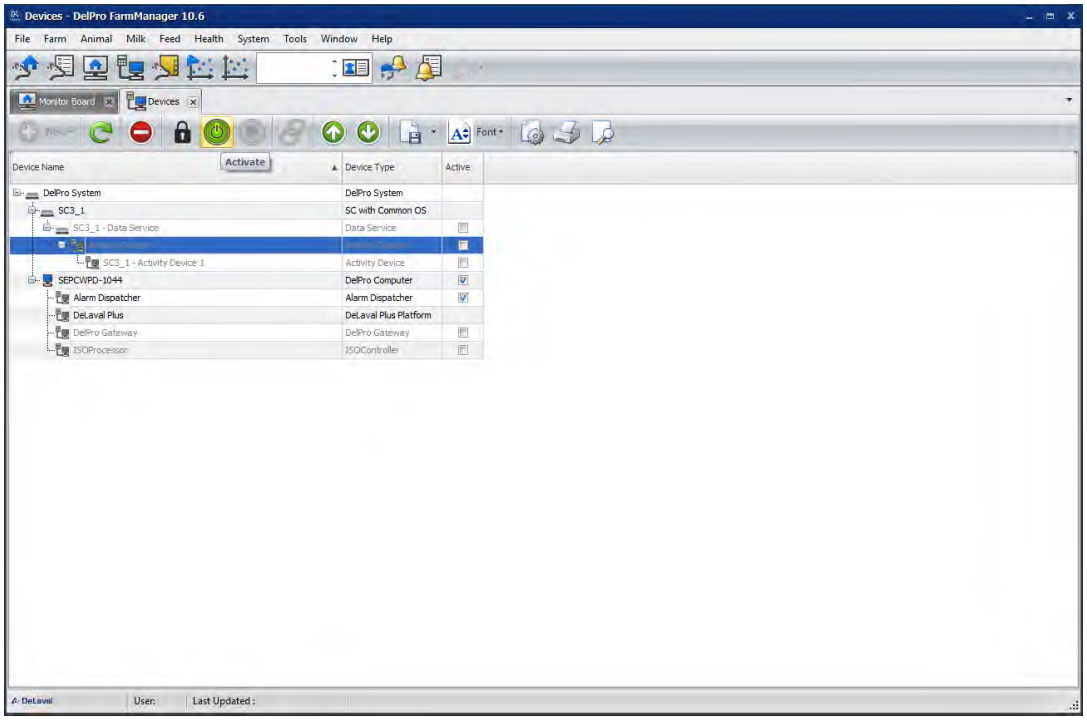

Fig. 48: Activating the **Activity System** device.

→ The **Activation of system device** dialogue opens.

10. In the **Activation of system device** dialogue, click **Yes**.

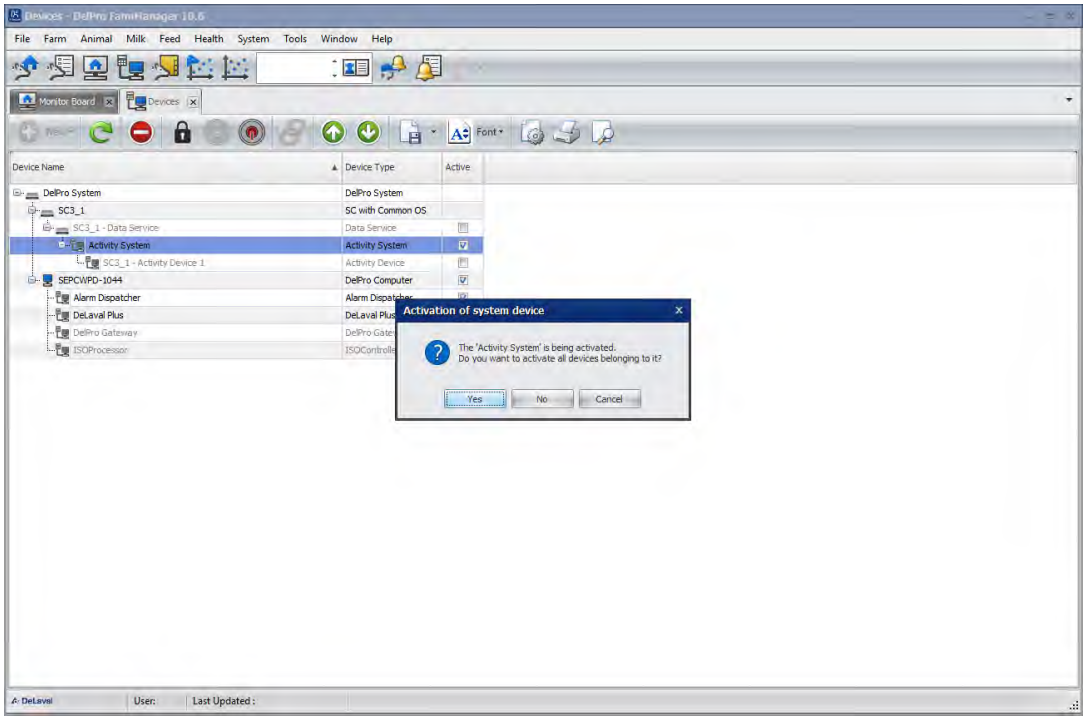

Fig. 49: The **Activation of system device** dialogue.

→ The **Activity System** device is activated.

© DeLaval 2024

11. In the **Devices** window, select **DelPro Gateway** and then click the **Activate** icon.

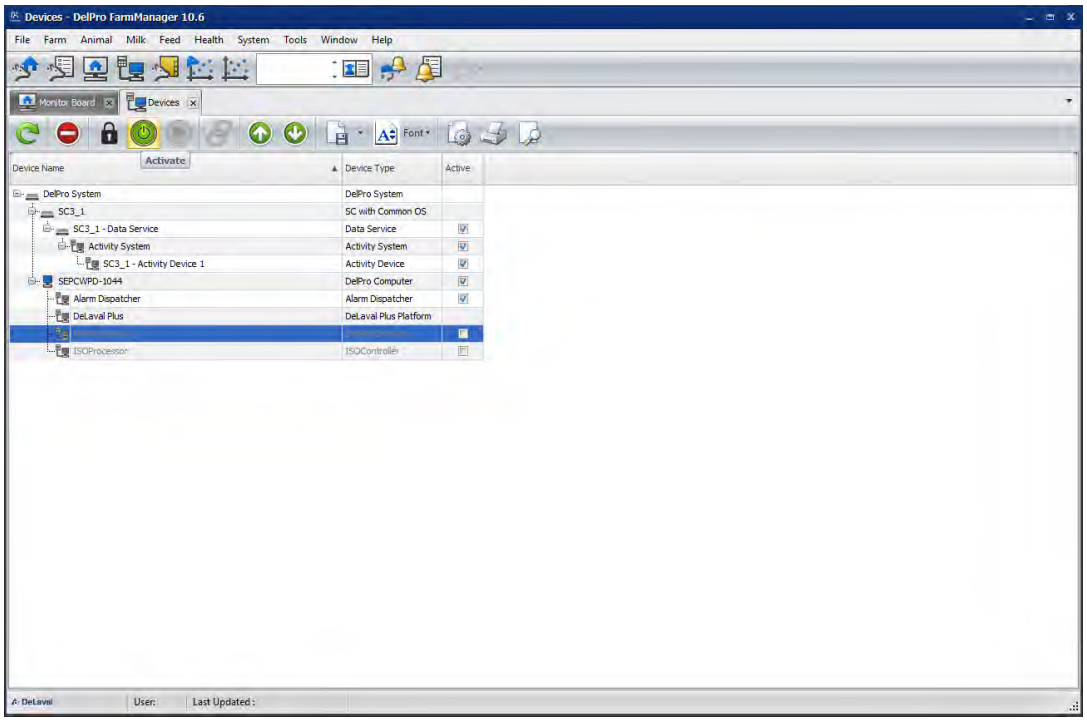

Fig. 50: Activating the **DelPro Gateway** device.

12. In **Farm Configurator**, reinstall the baseline.

Fig. 51: Farm Configurator.

13. Activate the activity meters and attach them to the cows. See **Start-up** > **Activating the activity meters**.

© DeLaval 2024

Note:

It is recommended that the activity meter stays permanently attached to the cow.

14. Match the activity meter ID numbers to the cow numbers. See **Start-up** > **Matching activity meters with animals in DelPro**.

Related topics:

- Activating the activity meters
- Matching activity meters with animals in DelPro

4.3 Activating the activity meters

Note:

The activity meter does not communicate with the ID reader. The AM can only be activated by the ID reader.

As soon as all the AM2's are activated but no animal number is yet assigned, these meters are listed under **Unknown Meters** in the farm management system. It is recommended to print out the unknown activity meter list from the **System** > **Activity** > **Activity performance** > **Unknown Meters** window in DelPro software and associate each AM2 with the cow number while attaching the neckbands with the activity meters on the animals.

The activity meter serial number is engraved on the grey front part of the AM2. The format is **123 XY 45678**. The activity meter ID number used in the system is the five digit number (45678).

Related topics:

- Starting up the activity meter system with DelPro 5 and DelPro 10 AWE
- Starting up the activity meter system with DelPro 6 and DelPro 10 NTP

4.3.1 Activating the activity meters manually

For heifers and non-milking animals that do not pass by a DeLaval ID reader regularly, the AM2 has to be activated manually before placing it onto the animal. If there is no DeLaval ID reader installed on the farm, a Handheld Reader (HHR) can be used for activation.

Note:

There are no restrictions on how many AM2 activity meters that can be started within a short time. A random delay at start up ensures that not all AM2 devices transmit their hourly activity report at the same time. This means that a full box of 40 AM2 activity meters can be activated at the same time by bringing the whole box close to a DeLaval ID reader.

Bring the AM2 close to the DeLaval ID reader for about five seconds. Turn the activity meter in different directions, to ensure a successful activation.

Note:

The AM2 activity meters are direction sensitive. The activation distance is comparable to the ID transponder reading range (approximately 300-400 mm maximum).

© DeLaval 2024

4.3.2 Automatic activation of the activity meters

As soon as the cow passes a DeLaval ID reader, the AM2 is automatically activated.

This method is convenient for all cows that pass a DeLaval ID reader regularly, for example:

- In feed stations, the ID reader is always active.
- In parlours, the entrance ID (blue curtain, multi reader or IRW) is active as long as the entrance gate is open.

Note:

It is not recommended to activate the AM2 in the VMS station as it depends on how close the cow gets to the ID reader.

Note:

This is regardless of what transponder type is set in DelPro software.

Note:

An ID verification reader is only active if an MPC is in test mode (F76).

- In rotaries, the entrance ID reader is always active, but not the verification reader.
- In sort gates, the ID reader is always active unless it was configured in DelPro software to switch off in certain time intervals.
- In smart selection gates, the ID reader is always active.
- Handheld Readers activate the activity meters when the HHR is switched to the reading mode.

Note:

To activate the activity meter using a Handheld Reader, bring it close to the HHR antenna and press the **Read Transponder** button while slowly turning the AM2 around.

4.4 Matching activity meters with animals in DelPro

There are two ways to assign an activity meter to a cow number – manually and automatically. The activity meters' serial numbers are engraved on the tags.

© DeLaval 2024

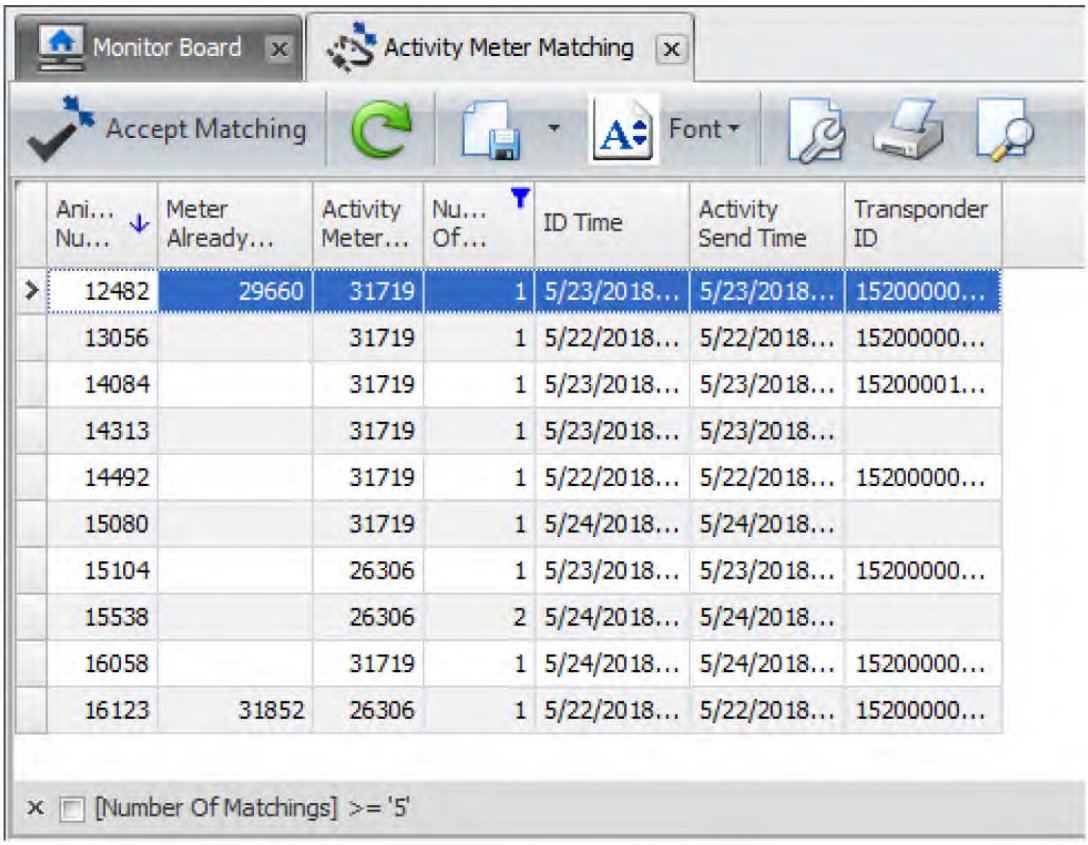

Ani... Nu...	Meter Already...	Activity Meter...	Nu... Of...	ID Time	Activity Send Time	Transponder ID
12482	29660	31719	1	5/23/2018...	5/23/2018...	15200000...
13056		31719	1	5/22/2018...	5/22/2018...	15200000...
14084		31719	1	5/23/2018...	5/23/2018...	15200001...
14313		31719	1	5/23/2018...	5/23/2018...	
14492		31719	1	5/22/2018...	5/22/2018...	15200000...
15080		31719	1	5/24/2018...	5/24/2018...	
15104		26306	1	5/23/2018...	5/23/2018...	15200000...
15538		26306	2	5/24/2018...	5/24/2018...	
16058		31719	1	5/24/2018...	5/24/2018...	15200000...
16123	31852	26306	1	5/22/2018...	5/22/2018...	15200000...

[Number Of Matchings] >= '5'

Fig. 52: Activity meter matching.

Related topics:

- Starting up the activity meter system with DelPro 5 and DelPro 10 AWE
- Starting up the activity meter system with DelPro 6 and DelPro 10 NTP

4.4.1 Assigning an activity meter manually

Assign the activity meter manually.
Choose from:

- Input the last five digits on the tab of the cow card in DelPro Farm Management System. The last five digits correspond to the activity meter number to be registered in DelPro.

Or

- Use batch edit **Animal general** to add the activity meters to multiple animals.

Note:

Remember to add activity meters before attaching the AM to the animal.

Note:

The activity meter has status **On** in the **Activity tag status** field in **Animal Card General** after the first activity data message is received by the farm management system.

© DeLaval 2024

4.4.2 Assigning an activity meter automatically

Assign the activity meter automatically.
Choose from:

- Go to **System** > **Activity** > **Activity performance** > **Unknown meters** window in DelPro software. In the list are all activity meters that are not assigned to any animal yet. It means that the system receives activity data but does not know to which animal it is assigned. Therefore, in the column with the animal numbers, there is a dummy number.

Or

- Use the matching meters function. The matching meters function is only available for CMS farms.

Note:

This function can be found in the tab **System** > **Activity** > **Activity Meter Matching**.

Then the list with the proposition of assigning the AM to the cow appears. The numbers of matching should be marked five to increase the likelihood of a correct match. The farmer is responsible to approve the matching, that's why matching is not automatically assigned.

© DeLaval 2024

5 Troubleshooting

5.1 The AM2 does not work from start

Symptom: The AM2 does not work from start.

Cause	Action
The unit could have been delivered in production mode.	Claim and replace with a new unit.

5.2 The AM2 works for some time but then stops working. The activity tester indicates NOT OK

Symptom: The AM2 works for some time but then stops working. The activity tester indicates NOT OK.

Cause	Action
The battery is low.	Claim and replace with a new unit.

Cause	Action
The MCU does not send radio signals.	Claim and replace with a new unit.

5.3 The AM2 works for some time but then stops creating activity graphs. The activity tester indicates OK

Symptom: The AM2 works for some time but then stops creating activity graphs. The activity tester indicates OK.

Cause	Action
The Mems sensor does not deliver full activity data.	Claim and replace with a new unit.

5.4 The AWR does not receive any signals

Symptom: The AWR does not receive any signals.

Cause	Action
The battery is low.	Make sure that the solar cells have enough sunlight.

© DeLaval 2024

5.5 Several cows do not show activity or very few activity messages are received

Symptom: Several cows do not show activity or very few activity messages are received.

Cause	Action
The activity receiver (or the activity receiver operating as a repeater) does not work correctly.	• For the AR2, check the AR2 LED indicator. Replace the AR2 if needed. • For the AR2 that is operating as a repeater, restart it to initiate the installation test function.

Cause	Action
The cows are out of range of the antenna.	• For the AR2, check the AR2 LED indicator. Replace the AR2 if needed. • For the AR2 that is operating as a repeater, restart it to initiate the installation test function.

5.6 Cows are only showing zeros in graphs and reports

Symptom: Cows are only showing zeros in graphs and reports.

Cause	Action
The cow has lost the activity meter.	Replace the activity meter.

5.7 An activity meter number without a corresponding cow number shows up in System > Activity performance > Unknown meters

Symptom: An activity meter number without a corresponding cow number shows up in **System** > **Activity performance** > **Unknown meters**.

Cause	Action
For one or more cows, the activity meter number has been wrongly entered, or not entered at all.	Check the activity meter number(s).

Cause	Action
The unknown activity meter has not yet been installed.	Install the unknown activity meter.

Cause	Action
The unknown activity meter has been removed from a cow but has not yet shut off.	No action required. The activity meter automatically shuts off after 48 hours of inactivity.

© DeLaval 2024

Cause	Action
The unknown activity meter belongs to a neighbouring farm.	

5.8 After an upgrade from ALPRO to DelPro, the system does not find cows in heat

Symptom: After an upgrade from ALPRO to DelPro, the system does not find cows in heat.

Cause	Action
	1. Upgrade to the latest AWE. **2.** Use the recommended reports "Cow to breed", "Heifer to breed", "Cows and Heifers to Breed". **3.** Start using relative activity in decision.

5.9 An activity meter slowly gets bad data

Symptom: An activity meter slowly gets bad data.

Cause	Action
The ball inside the AM1 could be stuck.	Check the report "Activity meter monitoring bad meter". Upgrade to the AR2/AM2 system in parallel and change the activity meter to AM2 when needed.

5.10 A cow with an activity meter does not show any activity data in graphs or reports

Symptom: A cow with an activity meter does not show any activity data in graphs or reports.

Cause	Action
The activity meter number has been wrongly entered.	Check the activity meter number.

Cause	Action
The cow is out of range of the antenna.	• Move the cow to a group that is closer to the antenna. • Alternatively, move the antenna or install another one to cover the area.

© DeLaval 2024

Cause	Action
The activity meter is out of battery or faulty.	Replace the activity meter.

5.11 Activity alarms come late

Symptom: Activity alarms come late.

Cause	Action
The cow could have been out of range when the first report was opened/refreshed.	Check that the activity receiver is placed in a way so that it detects the animals everywhere. Add more activity receivers if needed.

Cause	Action
The one or two hours late activity alarm could have gone off when the data is sent to DelPro. The activity receiver only sends data from the last clock hour, so the data is always one hour late. Depending on when the activity meter was activated, the sending could come in the beginning or in the end of the next hour. **Note:** None of this has any real effect on when to do the insemination.	

5.12 The heat alarms are missed

Symptom: The heat alarms are missed.

Cause	Action
There is no activity meter on the cow's neck.	1. Check if the cow has an activity meter. 2. Check if the activity meter sends data in the report **Technical monitoring** > **Activity Meter Monitoring** > **All**. If not already, start using the relative activity values. 3. Check if the alarm setting for the activity is the default one.

© DeLaval 2024

Cause	Action
The activity meter is broken.	**1.** Check if the cow has an activity meter. **2.** Check if the activity meter sends data in the report **Technical monitoring** > **Activity Meter Monitoring** > **All**. If not already, start using the relative activity values. **3.** Check if the alarm setting for the activity is the default one.

5.13 There are too many false alarms

Symptom: There are too many false alarms.

Cause	Action
Wrong settings.	**1.** Use the recommended reports "Cow to breed", "Heifer to breed", "Cows and Heifers to Breed". **2.** Start using relative activity in decision. **3.** Check if the alarm setting for the activity is the default one.

5.14 The system works OK on cows but not on heifers or vice versa

Symptom: The system works OK on cows but not on heifers or vice versa.

Cause	Action
Wrong settings.	**1.** Use relative activity. **2.** Check the high activity alarm settings. **3.** Use the recommended reports "Cow to breed", "Heifer to breed", "Cows and Heifers to Breed".

5.15 There are pregnant or dry cows in the report

Symptom: There are pregnant or dry cows in the report.

Cause	Action
Wrong filter settings.	Use the recommended reports "Cow to breed", "Heifer to breed", "Cows and Heifers to Breed".

© DeLaval 2024

5.16 It is too difficult to interpret the graphics

Symptom: It is too difficult to interpret the graphics.

Cause	Action
Wrong graphic settings.	**1.** Use the recommended graph series "Average Activity Level - 6 Hours Combined", "Activity Level - 6 Hours Combined", "Relative Activity (%)". **2.** Use the recommended reports "Cow to breed", "Heifer to breed", "Cows and Heifers to Breed".

© DeLaval 2024

6 Technical specifications

6.1 Technical data – AR2

Type	Value
Supply voltage	10-18 V AC/DC
Power consumption	2 VA
Dimensions	150x110x70 mm
Weight	350 g (without antenna, bracket and cable)
Ideal environment	Outdoors, under roof
Operating temperature	-25°C to +55°C
Storage temperature	-40°C to +70°C
Humidity	10-100% RH

6.2 Technical data – AM2

Type	Value
Operating voltage	2.2 to 3.3 V (internal battery)
Dimensions	79x59x39 mm
Weight	170 g
Ideal environment	Outdoors, attached to an animal
Operating temperature	-25°C to +55°C
Storage temperature	-40°C to +70°C
Recommended storage temperature	+5°C to +35°C
Humidity	10-100% RH
IP Class	IP 44 minimum

6.3 Technical data – AWR

Type	Value
Maximum power point	10 W
Nominal voltage	17.5 V
Dimensions	350x300x190 mm
Weight (including battery and antenna)	6.3 kg
Weight of battery	1.3 kg
Battery type	9.6 V, NiMH, 9000 mAh
Fuse	1 A
Ideal environment	Outdoors, wall or pole

© DeLaval 2024

Type	Value
Operating temperature	0°C to +40°C
Storage temperature	+5°C to +35°C
Humidity	10-100% RH

6.4 Market access information

6.4.1 Warranty

Note:

DeLaval will not take any responsibility for damage resulting from faulty installation, operation, or for improper or inadequate care and maintenance.

Note:

DeLaval will not take any responsibility for any damage resulting from frost. The owner/user must take the necessary measures to prevent the ambient temperature around the equipment from dropping to or below freezing point.

Note:

Modifications to the product may create risks not covered by the original construction. Do not make any modifications which have not been approved by DeLaval.

6.4.2 US Statement Class B digital device: Information to the user (FCC)

This equipment has been tested and found to comply with the limits for a Class B digital device, pursuant to part 15 of the FCC Rules. These limits are designed to provide reasonable protection against harmful interference in a residential installation. This equipment generates, uses and can radiate radio frequency energy and, if not installed and used in accordance with the instructions, may cause harmful interference to radio communications. However, there is no guarantee that interference will not occur in a particular installation.

If this equipment does cause harmful interference to radio or television reception, which can be determined by turning the equipment off and on, the user is encouraged to try to correct the interference by one or more of the following measures:

- Reorient or relocate the receiving antenna.
- Increase the separation between the equipment and receiver.
- Connect the equipment into an outlet on a circuit different from that to which the receiver is connected.
- Consult the dealer or an experienced radio/TV technician for help.

6.4.3 US Statement (FCC) for Radio Equipment

This device complies with Part 15 of the FCC Rules. Operation is subject to the following two conditions: (1) this device may not cause harmful interference, and (2) this device must accept any interference received, including interference that may cause undesired operation.

© DeLaval 2024

6.4.4 RF exposure to Humans (FCC and ISED)

To comply with FCC/IC RF exposure limits for general population / uncontrolled exposure, the antenna(s) used for this transmitter must be installed to provide a separation distance of at least 20 cm from any persons and must not be co-located or operating in conjunction with any other antenna or transmitter.

Note:

Changes or modifications to the equipment not expressly approved by the party responsible for compliance could void the user's authority to operate the equipment.

6.4.5 Canada Statement (ISED) Radio Equipment

This device contains licence-exempt transmitter(s)/receiver(s) that comply with Innovation, Science and Economic Development Canada’s licence-exempt RSS(s). Operation is subject to the following two conditions: (1) this device may not cause interference, and (2) this device must accept any interference, including interference that may cause undesired operation of the device.

Note:

In Canada, customers should always receive an instruction book in both English and French in accordance with local regulations.

6.4.6 Interference-Causing Equipment Standard (ICES-003)

The equipment meets all requirements for the Interference-Causing Equipment Standard (ICES-003): CAN ICES-003(B)/NMB-003(B).

Note:

In Canada, customers should always receive an instruction book in both English and French in accordance with local regulations.

6.4.7 Japan Statement (MIC) for Radio Equipment

In Japan, specific radio equipment must obtain a Technical Regulation Conformity Certification under the Radio Law. This equipment contains specified radio equipment that has been certified to comply with the Technical Regulation Conformity Certification under the Radio Law.

6.4.8 China Statement (SRRC) for Radio Equipment

This equipment contains specified radio equipment that has been certified by State Radio Regulation of China (SRRC) and the tests have been accredited by the Ministry of Industry and Information Technology (MIIT).

6.4.9 Regulatory compliance

For more information on regulatory compliance, see https://corporate.delaval.com/product-and-material-compliance

© DeLaval 2024

7 Disposal

7.1 Disposal recommendations

Disposal of products, components, original parts or disposables should be handled in accordance with local waste management procedures. Contact your local authority for details of the nearest designated collection point.

7.2 Disposal of packaging

Packaging EU Directive 94/62/EC

This symbol indicates that the product's packaging material can be recycled.

7.3 Disposal of waste electrical and electronic equipment

European WEEE Directive 2012/19/EU

The symbol of a crossed-out wheeled bin with a horizontal bar beneath should be affixed on all electrical and electronic products. This symbol indicates that when the product have reached the end of life, it must not be disposed of with municipal waste.

It is the customer's responsibility to dispose of the waste equipment by handing it over to an authorised collection point for the recycling of waste electrical and electronic equipment. In most Member States, consumers may also return waste equipment to the retailer upon purchase of an equivalent new product.

To prevent possible harm to human health or the environment from uncontrolled waste disposal, separate these items from other types of waste and recycle them responsibly, to promote the sustainable reuse of material resources.

Contact your local authority for details on the nearest designated collection point.

Note:

This symbol is only valid in the European Union. If you wish to discard this product, contact your local authorities or dealer and ask for the correct method of disposal.

© DeLaval 2024

is a registered trademark of Tetra Laval Holdings & Finance S. A. and DeLaval is a registered trade/service mark of DeLaval Holding AB.

DeLaval International AB
Box 39
SE-147 21 Tumba
SWEDEN

www.delaval.com