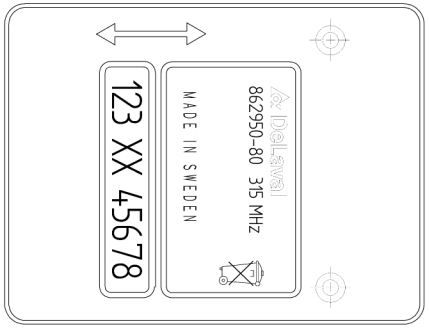

SECTION A-A
862950-80

2

Serial number acc. to
Test instruction 873704

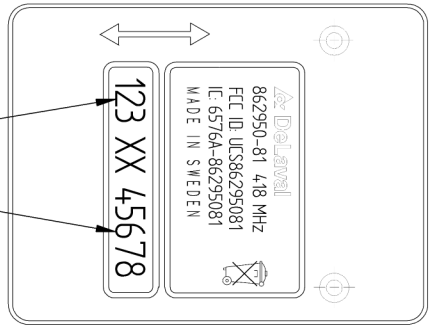

SECTION A-A
862950-81

Year code, month code
acc. to 956227

Engraving depth 0,5

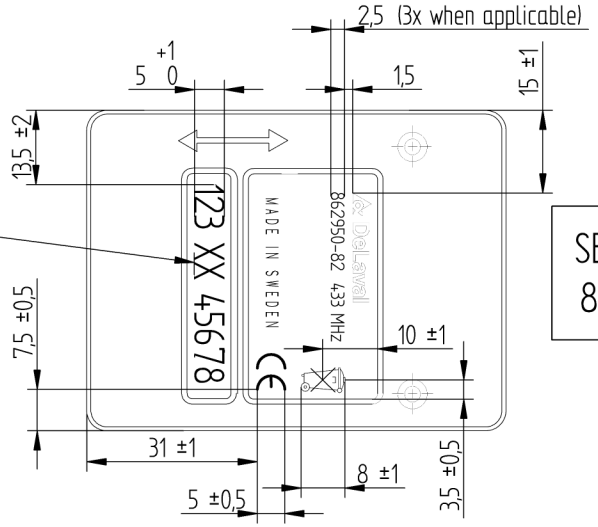

SECTION A-A
862950-82

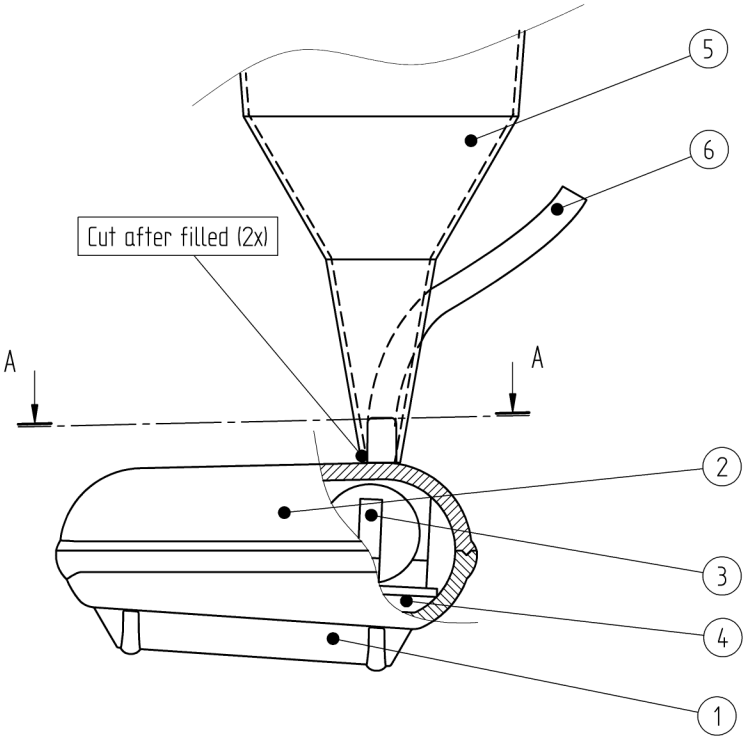

Rev. No.	Date	Revised	Checked	Appr.
2	2014-09-26	LE		LE

FCC id and IC number added for 862950 81
.

Article No.	Name/Designation	Material (final condition) Blank	Colour

Title
AKTIVITETSMÄTARE 2 KPL
ACTIVITY METER 2 CPL

DeLaval

Cadmodel: 1261923472

First angle projection Method ISO E	Scale 1:1	Dept. ATK	Date 2011-11-08	Sheet No. 1	No. of sheets 1	Revision No.
CAD	Class No.	Drawn LE	Checked	Appr. LE	Document No. 862950	