DeLaval in place ID reader IPR

Instruction Book

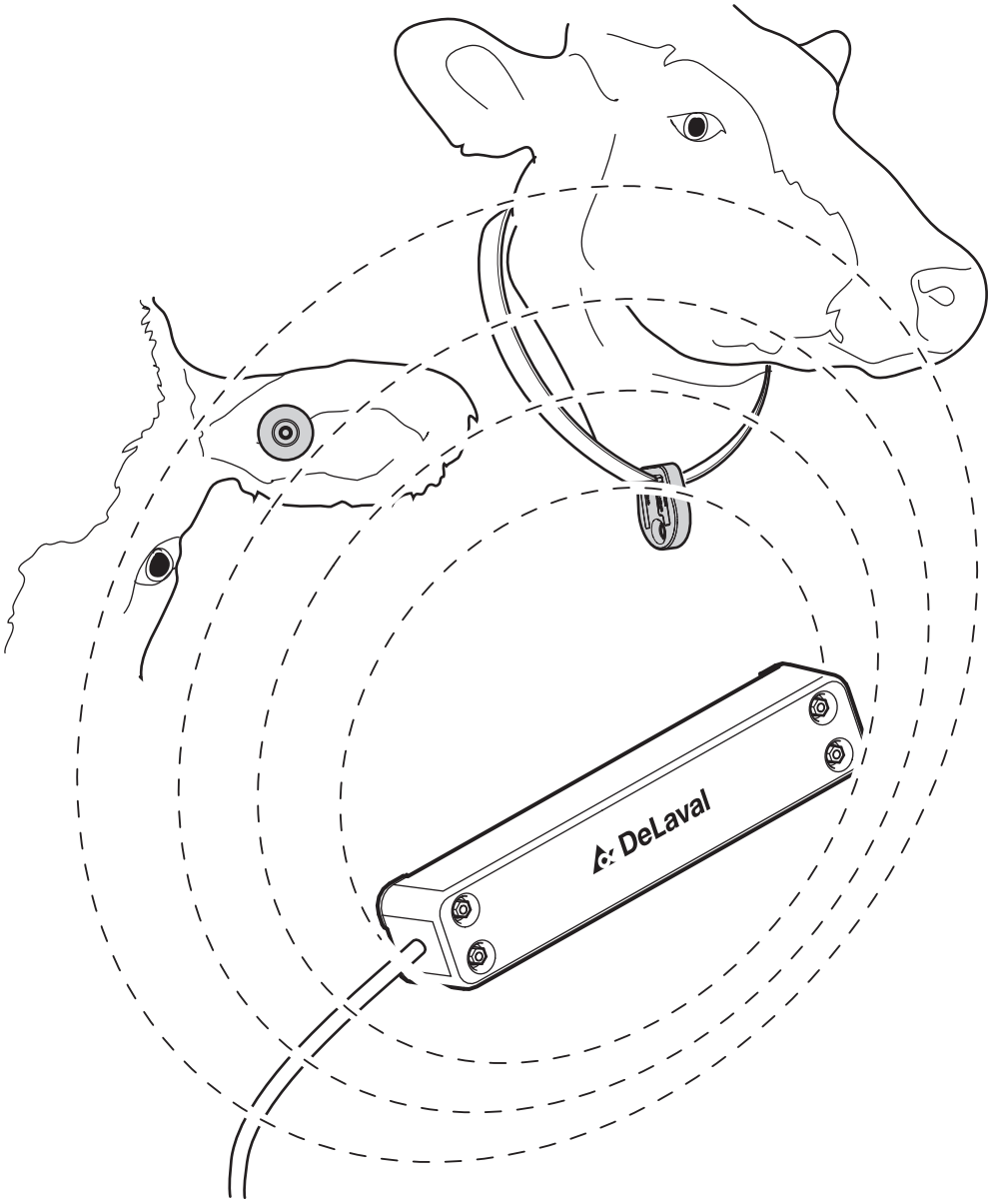

© DeLaval 2021.
2021-12-17, Version 6

89380401
Original instruction

DeLaval in place ID reader IPR

Table of contents

EU Declaration of Conformity - DeLaval in place ID reader IPR **5**

Safety precautions **7**

- DeLaval in place ID reader IPR

1 Foreword 7
2 Disclaimer 7
3 Definitions of admonishments 7
4 Safety regulations 8
4.1 Safety regulations - General 8
5 Compliance with national regulations 9
5.1 FCC Compliance Statement 9
5.2 ISED Compliance Statement 10
6 Type plate 10
7 Warranty 10
8 Regulatory compliance 11

General description **12**

- DeLaval in place ID reader IPR

1 Introduction 12
2 Technical data 14

Planning **16**

- DeLaval in place ID reader IPR

1 Suggested configuration layout 16
2 Reading volume 17

Troubleshooting **18**

- DeLaval in place ID reader IPR

1 Problems with the in-place reader (IPR) 18

Disposal **19**

- DeLaval in place ID reader IPR

1 Disposal and recycling information 19
1.1 Disposal of packaging material 19
1.2 Disposal of electrical and electronic equipment with or without battery 19

© DeLaval 2021.

Table of contents

© DeLaval 2021.

CE

EU Declaration of Conformity

Name of product:	**DeLaval in place ID reader IPR**
Type/model:	IPR
Report No.	D0000106871

The product complies with requirements of the following directives:

Restriction of the use of certain hazardous substances (RoHS) - 2011/65/EU
Radio equipment directive RED 2014/53/EU

Harmonized standards which have been used or parts thereof:

EN 300 220-2 V2.4.1: 2012

EN 301 489-1 V2.2.0

EN 301 489-3 V2.1.1

Other technical standards and specifications used:

EN 55032:2012 + AC:2013

EN 62368-1:2014

Fulfills RoHS by design and purchase control

This declaration of conformity is issued under the sole responsibility of the manufacturer.

Tumba 2020-06-19 Signed:

Name:	Magnus Berg
Position:	Executive Vice President
Department:	Product Management & Development

Person authorised to compile the technical file:

Product Manager
P.O. Box 39
SE 147 21 TUMBA
Sweden

© DeLaval 2021.

Name and address of manufacturer:

DeLaval International AB
P.O. Box 39
SE 147 21 TUMBA
Sweden

© DeLaval 2021.

Safety precautions

DeLaval in place ID reader IPR

1 Foreword

The safety and operational instructions must be observed by any person involved with the use or operation of this equipment. Under no circumstances must the equipment be used if it is damaged or if the operation of the equipment is not completely understood.

2 Disclaimer

The information, instructions and parts listed are applicable and current on the date when issued. DeLaval reserves the right to make changes without notice.

3 Definitions of admonishments

Admonishments are safety related warning messages.

Admonishments provide important information intended to prevent incorrect or hazardous use of equipment, machinery or software, and support risk assessment.

The following list defines the different types of admonishments used in DeLaval documentation:

Danger: *Refers to imminent and severe risk. Failure to comply with instruction will result in serious injury or death.*

Warning: *Refers to a potential but severe risk. Failure to comply with instruction could result in injury or death.*

Caution: *Refers to a limited risk. Failure to comply with instruction could result in minor injury.*

Mandatory: *Refers to an action or behaviour which is essential to safe and successful use of the equipment.*

Prohibited: *Refers to an action or behaviour which is incompatible to safe and successful use of the equipment.*

© DeLaval 2021.

Note! *Is intended to draw attention to specific points of importance in the text and advice to prevent equipment damage.*

⚠ This symbol signals risk of injury.

⚠ This symbol signals risk of electric shock.

For other symbol definitions see ISO 7010.

4 Safety regulations

4.1 Safety regulations - General

Warning!
Intended use
Do not use the equipment for any other purposes than the intended use.

Warning!
Keep safety signs legible!
Read all the safety signs on the machine and in this manual. Replace any lost or damaged signs. Keep safety signs clean and legible at all times.

Mandatory!
Read the instructions carefully before using the equipment. Contact the local DeLaval dealer if there are parts of these instructions that are not understood. Compliance with the instructions ensures a correct and safe use of the equipment. Save the instructions for future reference.

© DeLaval 2021.

Prohibited!

Do not use inadequate parts or consumables.

Using products which do not meet specified requirements, for example spare parts or consumables, or not appropriately trained personnel for the DeLaval product may lead to risks or damage. Consequently it may also void or limit the warranty.

5 Compliance with national regulations

5.1 FCC Compliance Statement

This equipment was tested and found to comply with the limits for a Class A digital device, pursuant to part 15 of the FCC Rules. These limits are designed to provide reasonable protection against harmful interference when the equipment is operated in a commercial environment. This equipment generates, uses, and can radiate radio frequency energy and, if not installed and used in accordance with the instruction manual, may cause harmful interference to radio communications.

Operation of this equipment in a residential area is likely to cause harmful interference in which case the user will be required to correct the interference at his own expense.

This device complies with Part 15 of the FCC Rules. Operation is subject to the following two conditions: (1) this device may not cause harmful interference, and (2) this device must accept any interference received, including interference that may cause undesired operation.

To comply with FCC/IC RF exposure limits for general population / uncontrolled exposure, the antenna(s) used for this transmitter must be installed to provide a separation distance of at least 20 cm from all persons and must not be co-located or operating in conjunction with any other antenna or transmitter.

Note! *Changes or modifications not expressly approved by the party responsible for compliance could void the user's authority to operate the equipment.*

© DeLaval 2021.

5.2 ISED Compliance Statement

This device contains licence-exempt transmitter(s)/receiver(s) that comply with Innovation, Science and Economic Development Canada's licence-exempt RSS(s). Operation is subject to the following two conditions:

- This device may not cause interference.
- This device must accept any interference, including interference that may cause undesired operation of the device.

Note! *Changes or modifications not expressly approved by the party responsible for compliance could void the user's authority to operate the equipment.*

6 Type plate

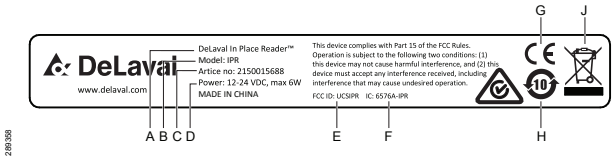

Fig. 1: Type plate.

A: Product name
B: Model
C: Article number
D: Power
E: FCC ID
F: IC
G: European Conformity mark
H: China RoHS symbol
J: The symbol of crossed-out wheelie bin with the horizontal bar beneath, see *Chapter 1 " Disposal and recycling information " on page 19*.

7 Warranty

Note! *DeLaval will not take any responsibility for damage resulting from faulty installation, operation, or for improper or inadequate care and maintenance.*

Note! *Modification may create risks not covered by the original construction. Do not make any modifications which have not been approved by DeLaval.*

© DeLaval 2021.

8 Regulatory compliance

For more information on regulatory compliance, see *http://www.delavalcorporate.com/sustainability/our-operations/regulatory-Compliance/*.

© DeLaval 2021.

General description

DeLaval in place ID reader IPR

1 Introduction

DeLaval in place ID reader IPR identifies animals with B-transponders (for the neck), or with ISO transponders (HDX and FDX transponders for the ear).

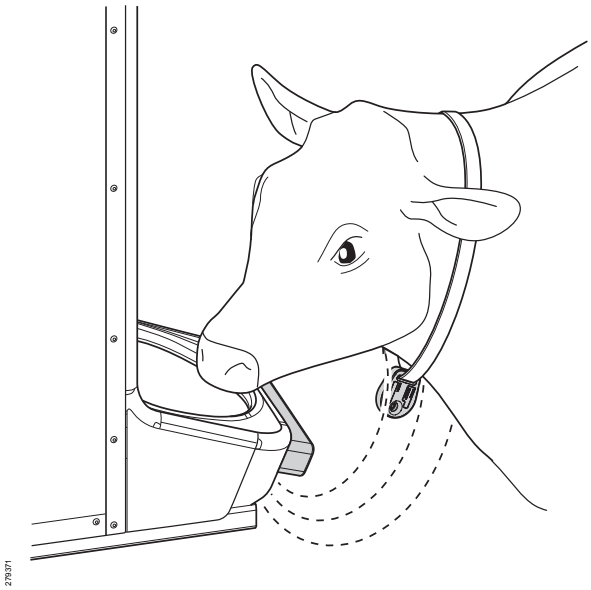

Fig. 2: B-transponder.

© DeLaval 2021.

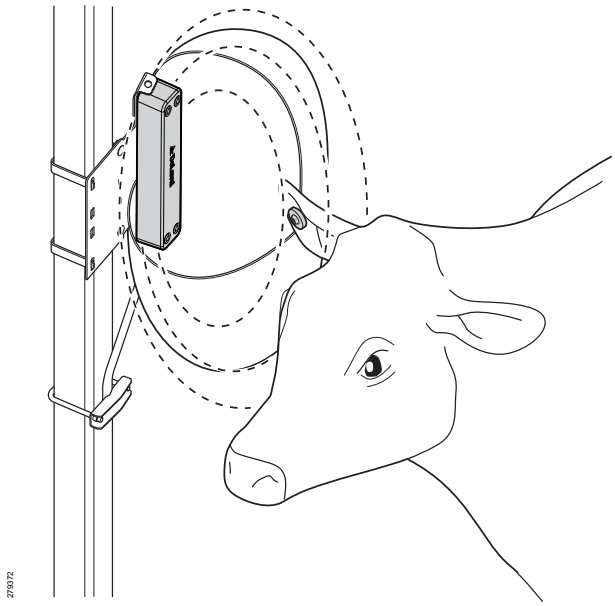

Fig. 3: ISO transponder.

The IPR is designed for various applications, including milking systems and feeding systems.

The reader sends the scanned data to a receiving unit, for example, a milking station controller, when a transponder is within the range of the reader. The data is later processed by the receiving unit. After the receiving unit processed the data, the programmed action follows.

© DeLaval 2021.

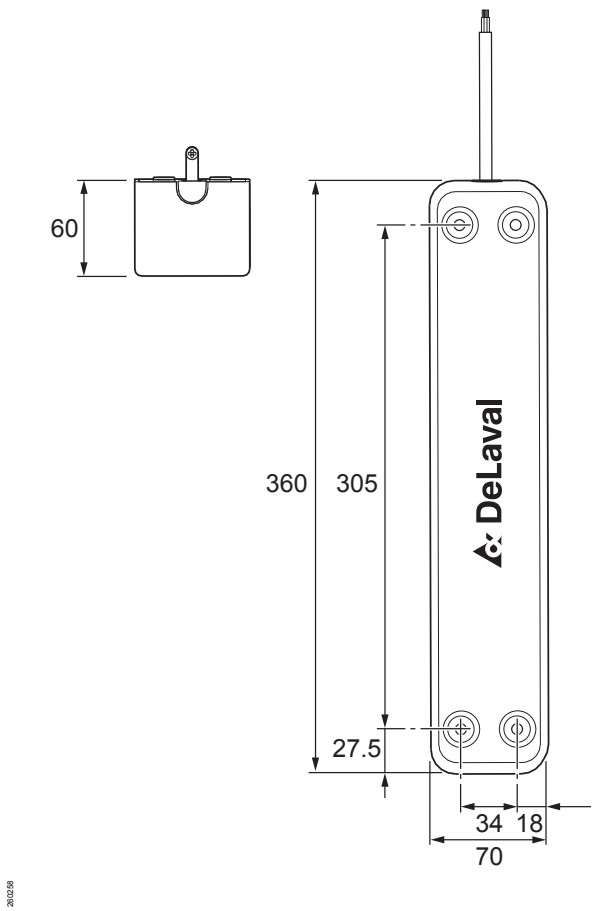

Fig. 4: DeLaval in place ID reader IPR dimensions.

2 Technical data

Technical data	
Power supply	12 or 24 VDC
TX Frequency	134 200Hz
RX Frequency	95000 -138000 Hz
Supply current (transmitting)	6 W, 0.5 A (12 VDC) / 0.25 A (24 VDC)
Supply current (standby)	2 W, 0.2 A (12 VDC) / 0.1 A (24 VDC)
Weight	2.8 kg (including the cable)
Minimum ambient temperature	-25°C (during operation)
Maximum ambient temperature	55°C (during operation, 70°C during storage)
Minimum ambient humidity	20%
Maximum ambient humidity	70%

Article number	Description	Type of animal transponder
2150015681	DeLaval in place ID reader IPR H/F	ISO (HDX+FDX)
2150015688	DeLaval in place ID reader IPR B	B-Transponder

© DeLaval 2021.

Wire description for 2150015681/2150015688 and 2150009406/2150009407

IPR wire number	MPC connection terminal for rod reader	Function
1	Red	12-24V DC
2	Black	Ground
3	Green	Data
4	White	Synchronization

Wire description for 87486380 and 87486381

IPR wire colour	MPC connection terminal for rod reader	Function
Red	Red	12-24V DC
Black	Black	Ground
Green	Green	Data
White	White	Synchronization

© DeLaval 2021.

Planning

DeLaval in place ID reader IPR

1 Suggested configuration layout

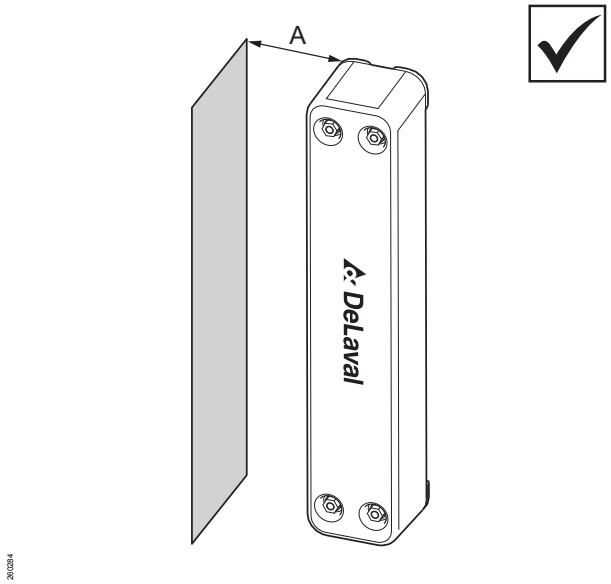

Fig. 5: IPR positioning near metal objects.

A: More than 100 mm

DeLaval in place ID reader IPR is fastened directly with four bolts on the metal surface without the need for additional protection. However, the associated cable must be well protected.

The reader should not be located close to any metal objects, as they can cause disruptions in ID readings and reduce the reading distance. The minimum required distance is 100 mm at the sides and 500 mm at the front. Metal objects (including the IPR bracket) placed directly behind the reader do not affect system operation.

Note! *Be aware that surrounding metal objects may cause disturbance.*

© DeLaval 2021.

2 Reading volume

The DeLaval in place ID reader IPR generates a magnetic field around the reader which activates the transponder. The magnetic field is automatically tuned to give optimum performance within certain limits in various applications.

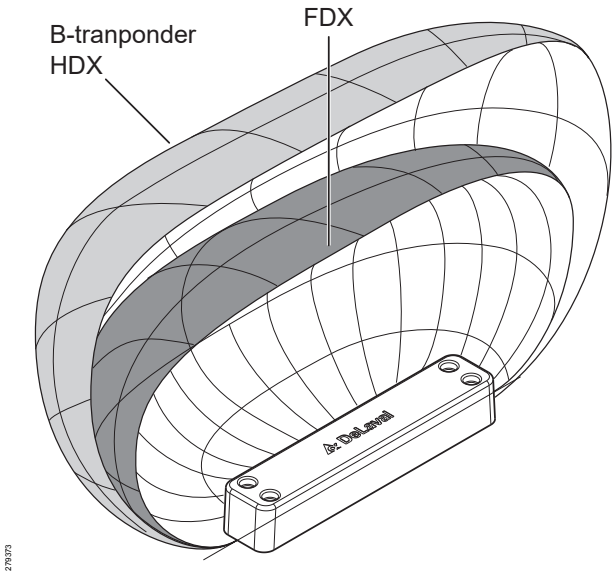

Fig. 6: Reading volume long side.

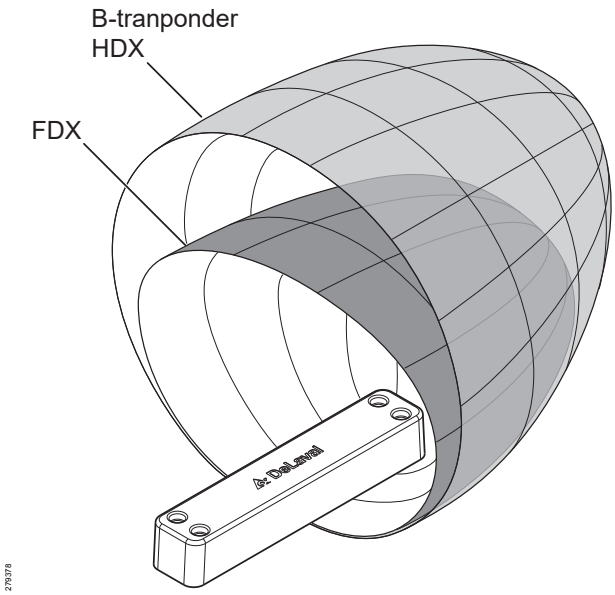

Fig. 7: Reading volume short side.

The activation volume (reading volume) differs depending on the transponder type (HDX, B or FDX), see Fig. 6 and Fig. 7.

Note! *Metal objects close to the reader may impact the reading volume (reading performance).*

The DeLaval in place ID reader IPR is capable of handling different positions (angles) of the transponder, which guarantees a highly accurate reading.

© DeLaval 2021.

Troubleshooting

DeLaval in place ID reader IPR

1 Problems with the in-place reader (IPR)

No.	Symptom	Cause	Action
1	Decreased reading distance.	Disturbances caused by metal objects placed near the reader.	■ Remove all metal objects located within a distance of less than 100 mm from the sides or 500 mm at the front of DeLaval in place ID reader IPR. ■ Restart the reader.
2	The IPR reports unexpected ID numbers.	More than one transponder in the reading area.	Ensure a single transponder reading and eliminate cross-reading.
3	The IPR does not read any transponders.	No power supply connected to the DeLaval in place ID reader IPR or wire issues.	■ Check the power supply. ■ Check the supply voltage (12 or 24 V DC). ■ Contact an authorised service technician.

© DeLaval 2021.

Disposal

DeLaval in place ID reader IPR

1 Disposal and recycling information

When the product reaches end of life, dispose it properly in accordance with local laws and regulations.

1.1 Disposal of packaging material

(Packaging EU Directive 94/62/EC)

This symbol indicates that the product's packaging material can be recycled.

1.2 Disposal of electrical and electronic equipment with or without battery

(WEEE European Directive 2012/19/EU)

(European Battery Directive 2006/66/EC)

These symbols with a crossed-out wheelie bin on the product or its packaging indicate that the equipment is electrical waste, with or without battery, and shall not be disposed of with household waste.

A horizontal bar beneath the bin means that the product is manufactured after August 13, 2005.

To prevent inappropriate waste handling of this product, and its negative consequences on the environment and human health, all products shall be disposed of in accordance with local laws and regulations. Hand it over to an official recycling facility, or use a battery disposal facility when available.

Please contact the local municipal office for information on the nearest recycling station.

© DeLaval 2021.

Disposal

© DeLaval 2021.

is a registered trademark of Tetra Laval Holdings & Finance S. A. and DeLaval is a registered trade/service mark of DeLaval Holding AB.

DeLaval International AB
Box 39
SE-147 21 Tumba
SWEDEN

www.delaval.com