ESTECH Co., Ltd. Rm 1015, World Venture Center II, 426-5 Gasan-dong, Guncheon-gu, Seoul, 158-803, Korea	MIC KOLAS VCI FC	**Electromagnetic Interference Test Report**

Test Report for FCC

Report Number		ESTF150606-006		
Applicant	Company name	WaveON Inc.		
	Address	#302, 3F Gangnam Bldg., 107-2 Yangjae-Dong, Seocho-Gu, Seoul, 137-130, Korea		
	Telephone	82-2-575-4100		
Product	Product name	AON 7.1ch USB Home Theater HeadPhone		
	Model No.	MCH-501U	Manufacturer	WaveON Inc.
	Serial No.	NONE	Country of origin	KOREA
Test date	2006-04-07 ~ 2006-06-16		Date of issue	16-Jun-06
Testing location	ESTECH. Co., Ltd. 97-1 Hoiuk-Ri Majang-Myon, Icheon-city, KyungKi-Do, Korea			
Standard	FCC PART 15 2006 , ANSI C 63.4 2003			
Test item	■ Conducted Emission	□ Class A ■ Class B	Test result	OK
	■ Radiated Emission	□ Class A ■ Class B	Test result	OK
Measurement facility registration number		94696		
Tested by	Engineer J.H.Kim	(Signature)		
Reviewed by	Engineering Manager J.M.Yang	(Signature)		
Abbreviation	OK, Pass = Passed, Fail = Failed, N/A = not applicable			

* Note

- This test report is not permitted to copy partly without our permission
- This test result is dependent on only equipment to be used
- This test result based on a single evaluation of one sample of the above mentioned

Contents

1. Laboratory Information 3
2. Description of EUT 4
3. Test Standards 5
4. Measurement condition 6
5. Measurement of radiated emission 8
   5.1 Measurement equipment 8
   5.2 Environmental conditions 8
   5.3 Test data 9
6. Measurement of conducted emission 10
   6.1 Measurement equipment 10
   6.2 Environmental conditions 10
   6.3 Test data 11
7. Photographs of test setup 12
8. Photographs of EUT 14

Appendix 1. Spectral diagram

1. Laboratory Information

1.1 General

This EUT (Equipment Under Test) has been shown to be capable of compliance with the applicable technical standards and is tested in accordance with the measurement procedures as indicated in this report.ESTECH Lab attests to accuracy of test data. All measurement reported herein were performed by ESTECH Co., Ltd.
ESTECH Lab assume full responsibility for the completeness of these measurements and vouch for the qualifications of all persons taking them.

1.2 Test Lab.

Corporation Name : ESTECH Co. Ltd

Head Office : Rm 1015, World Venture Center II, 426-5, Gasan-dong, Geumcheon-gu, Seoul, Korea
(Safety & Telecom. Test Lab)

EMC Test Lab : 58-1 Osan-Ri, GaNam-Myon, YeoJoo-Gun, KyungKi-Do, Korea
97-1 Hoiuk-Ri Majang-Myon, Icheon-city, KyungKi-Do, Korea

1.3 Official Qualification(s)

MIC : Granted Accreditation from Ministry of Information & Communication for EMC, Safety and Telecommunication
KOLAS : Accredited Lab By Korea Laboratory Accreditation Schema base on CENELEC requirements
FCC : Filed Laboratory at Federal Communications Commission
VCCI : Granted Accreditation from Voluntary Control Council for Interference from ITE

2. Description of EUT

2.1 Summary of Equipment Under Test

NONE	: AON 7.1ch USB Home Theater HeadPhone
Model Number	: MCH-501U
Serial Number	: NONE
Manufacturer	: WaveON Inc.
Country of origin	: KOREA
Rating	: DC 5V(Supplied from PC)
Receipt Date	: 2006-04-07

2.2 General descriptions of EUT

AON 7.1ch USB Headphone

Impedance	Front / Center Unit: 32 Ohm at 1KHz, 30mm Rear / Rear Back Unit: 32 Ohm at 1KHz, 32mm Subwoofer: 32 Ohm at 1KHz, 43mm
Frequency Response	18 ~ 22KHz
Cord	Straight, 310cm
Weight	280g (headphone only)

AON 7.1ch USB Control Unit

Interface	USB Connection Port (USB 1.1/2.0 compatible)
SNR	> 92 dB
Distortion	< 0.4 %
Power Consumption	Max. 5V, 500mA
Size	29 X 17 X 70mm (W X D X H)
Weight	40g

Microphone

Sensitivity	40dB±3dB
SNR	> 58dB
Frequency Response	50 ~ 20KHz
Impedance	Max. 2.2kΩ
Input S.P.L	Max. 110dB

Using Freq. : 12MHz

3. Test Standards

Test Standard : FCC PART 15 (2006)

This Standard sets out the regulations under which an intentional, unintentional, or incidental radiator may be operated without an individual license. It also contains the technical specifications, administrative requirements and other conditions relating to the marketing of Part 15 devices.

Test Method : ANSI C 63.4 (2003)

This standard sets forth uniform methods of measurement of radio-frequency (RF) signals and noise emitted from both unintentional and intentional emitters of RF energy in the frequency range 9 kHz to 40 GHz. Methods for the measurement of radiated and AC power-line conducted radio noise are covered and may be applied to any such equipment unless otherwise specified by individual equipment requirements. These methods cover measurement of certain decides that deliberately radiate energy, such as intentional emitters, but does not cover licensed transmitters. This standard is not intended for certification/approval of avionic equipment or for industrial, scientific, and medical (ISM) equipment These method apply to the measurement of individual units or systems comprised of multiple units

4. Measurement Condition

4.1 EUT Operation.

* The EUT was in the following operation mode during all testing
* The operational conditions of the EUT was determined by the manufacturer according to the typical use of the EUT with respect to the expected hightest level of emission
* After setting audio program to Note PC, we tested the EUT under continuous playing Audio out

4.2 Configuration and Peripherals

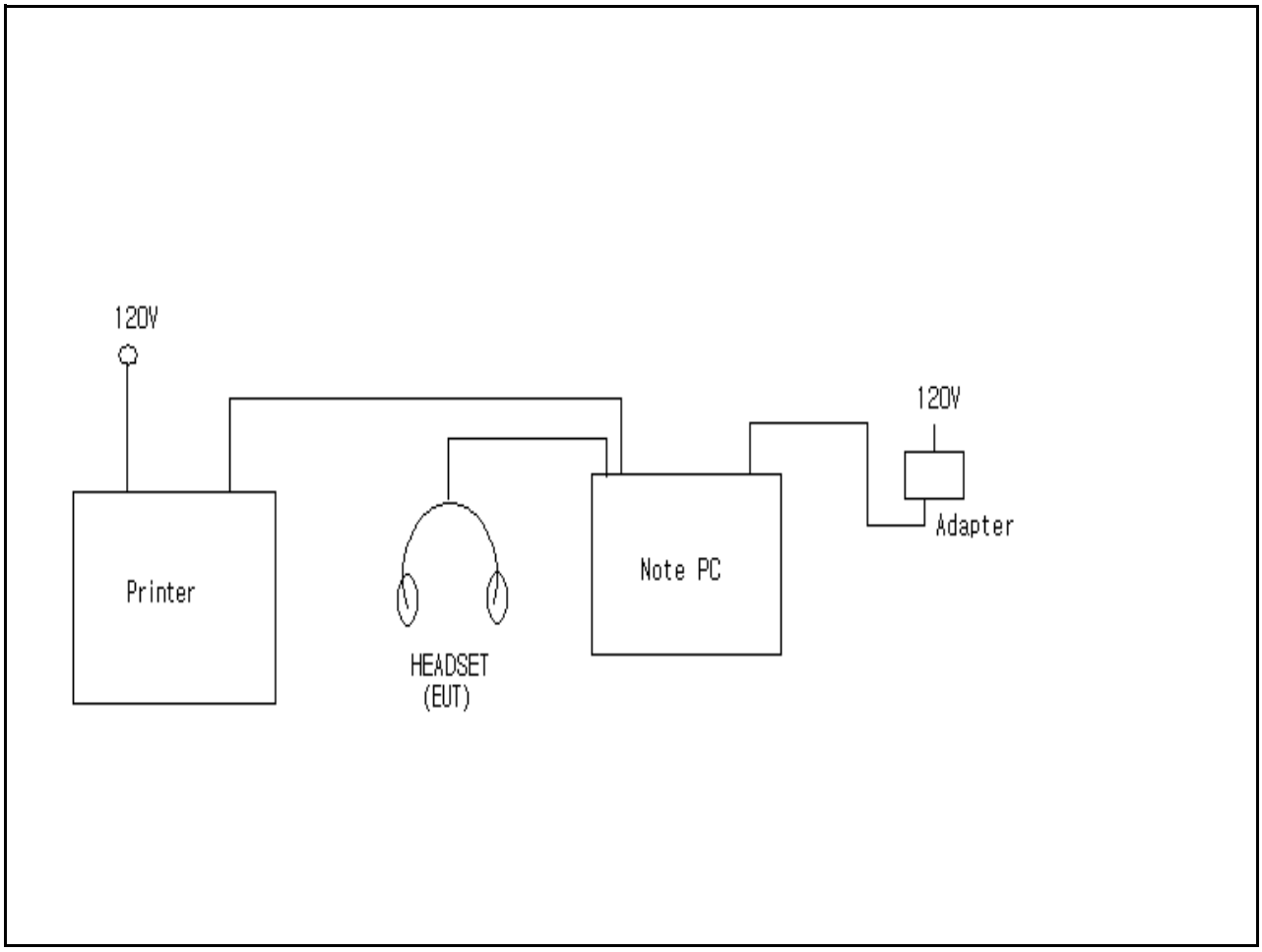

4.4 EUT and Support equipment

Equipment Name	Model Name	S/N	Manufacturer	Remark (FCC ID)
AON 7.1ch USB Home Theater HeadPhone	MCH-501U	NONE	WaveON Inc.	EUT
NOTE PC	PPIIL	35748823888	Dell Asia Pacific Sdn.	-
ADAPTER	PA-1650-05DK	DLL00	Donggung Lite Power 2nd Plant	
PRINTER	LQ-570H+	B1021095782	Trigem Computer inc	

4.5 Cable Connecting

Start Equipment		End Equipment		Cable Standard		Remark
Name	I/O port	Name	I/O port	Length	Shielded	
AON 7.1ch USB Home Theater HeadPhone	USB	NOTE PC	USB	2.5	Y	-
NOTE PC	PARALLEL	PRINTER	PARALLEL	2	Y	-
NOTE PC	USB	ADAPTER	-	1	N	

5. Measurement of radiated disturbance

Above 30 MHz Electric Field strength was measured in accordance with FCC Part 15 (2006). The test setup was made according to ANSI C 63.4 (2003) on an open test site, which allows a 3m distance measurement. The EUT was placed in the center of wooden turntable. The height of this table was 0.8m. The measurement was conducted with both horizontal and vertical antenna polarization. The turntable has fully rotated. For further description of the configuration refer to the picture of the test set-up.

5.1 Measurement equipments

Equipment Name	Type	Manufacturer	Serial No.	Next Calibration date
TEST Receiver	ESVS10	Rohde & Schwarz	838562/002	2007. 1. 23
Spectrum Analyzer	R3262C	ADVANTEST	61720116	2007. 4. 19
LogBicon Antenna	VULB 9160	Schwarzbeck	3142	2007. 5. 03
Amplifier	310N	Sonoma Instrument	185723	2006. 9. 21

5.2 Environmental Condition

Test Place : Open site(3m)

Temperature (°C) : 22 ℃

Humidity (%) : 45 %

5.3 Test data

Test Date : 11-May-06 Measurement Distance: 3 m

Frequency (MHz)	Reading (dBμV)	Position (V/H)	Height (m)	Correction Factor		Quasi-peak Value		
				Ant Factor (dB)	Cable (dB)	Limit (dBμV/m)	Result (dBμV/m)	Margin (dB)
60.01	11.90	V	1.0	12.67	1.2	40.0	25.72	-14.28
72.00	16.10	H	2.2	11.02	1.3	40.0	28.41	-11.59
108.01	17.40	V	1.0	10.38	1.5	43.5	29.29	-14.21
144.00	15.30	V	1.0	13.40	1.9	43.5	30.57	-12.93
168.02	13.60	V	1.0	13.95	2.0	43.5	29.56	-13.94
192.01	19.40	V	1.0	11.14	2.2	43.5	32.73	-10.77
216.00	15.20	H	1.2	10.72	2.3	43.5	28.19	-15.31
240.02	18.40	H	1.1	11.71	2.4	46.0	32.51	-13.49
264.04	18.50	H	1.0	12.22	2.5	46.0	33.19	-12.81
288.03	14.70	H	1.0	12.98	2.6	46.0	30.29	-15.71
312.03	24.10	H	1.0	13.45	2.7	46.0	40.30	-5.70
336.03	25.20	H	1.0	13.99	2.8	46.0	42.01	-3.99
360.03	23.80	H	1.0	14.39	3.0	46.0	41.19	-4.81
384.05	22.70	H	1.0	14.97	3.1	46.0	40.73	-5.27
432.04	12.90	H	1.0	16.01	3.2	46.0	32.15	-13.85
504.02	8.50	V	1.0	17.11	3.6	46.0	29.16	-16.84
600.03	6.40	V	1.0	19.16	4.0	46.0	29.51	-16.49

Remark	H : Horizontal, V : Vertical Note: 1)The measurement BW of the radiated emissions test is 120kHz. 2)The device was evaluated in three orthogonal axis (X,Y & Z) and then tested in the worst case orientation.

6. Measurement of conducted disturbance

The continuous disturbance voltage of AC Mains in the frequency from 0.15 to 30 MHz was measured in accordance to FCC Part 15 (2006). The test setup was made according to ANSI C 63.4 (2003) in a shielded. The EUT was placed on a non-conductive table at least 80 above the ground plan. A grounded vertical reference plane was positioned in a distance of 40cm from the EUT. The distance from the EUT to other metal surfaces was at least 0.8m. The EUT was only earthen by its power cord through the line impedance stabilizing network. The power cord has been bundled to a length of 1.0m.. The test receiver with Quasi Peak detector complies with CISPR 16.

6.1 Measurement equipments

Equipment Name	Type	Manufacturer	Serial No.	Next Calibration date
LISN	ESH3-Z5	Rohde & Schwarz	838979/010	2007. 2. 27
LISN	NNLA8120A	Schwarzbeck	8120161	2007. 2. 27
TEST Receiver	ESPI7	Rohde & Schwarz	100185	2006. 8. 22
Pulse Limiter	ESH3Z2	Rohde & Schwarz	NONE	2007. 6. 15

6.2 Environmental Condition

Test Place : Shield Room

Temperature (°C) : 20 ℃

Humidity (%) : 41 %

6.3 Test data

Test Date : 12-May-06

Frequency (MHz)	Correction Factor		Line (H/N)	Quasi-peak Value			Average Value		
	Lisn (dB)	Cable (dB)		Limit (dBμV)	Reading (dBμV)	Result (dBμV)	Limit (dBμV)	Reading (dBμV)	Result (dB)
0.16	0.07	0.0	N	65.26	46.20	46.28	55.26	29.40	29.48
0.17	0.07	0.0	N	64.77	44.86	44.95	54.77	30.16	30.25
0.19	0.07	0.0	H	63.99	40.74	40.84	53.99	25.58	25.68
0.21	0.07	0.0	H	63.37	42.76	42.87	53.37	-	-
0.22	0.07	0.0	N	62.97	45.40	45.51	52.97	32.19	32.30
0.23	0.07	0.1	H	62.52	44.19	44.31	52.52	31.75	31.87
0.26	0.07	0.1	H	61.56	30.61	30.75	51.56	20.71	20.85
0.28	0.07	0.1	N	60.91	33.45	33.60	50.91	21.48	21.63
0.29	0.07	0.1	N	60.47	33.56	33.72	50.47	-	-
0.30	0.00	0.0	H	60.13	32.31	32.31	50.13	-	-
0.34	0.07	0.1	H	59.30	32.28	32.47	49.30	23.84	24.03
3.00	0.14	0.3	H	56.00	37.09	37.53	46.00	19.02	19.46
Remark	H : Hot Line, N : Neutral Line								

7. Photographs of test setup

7.1 Setup for Radiated Test : 30 ~ 1000 MHz

[Front]

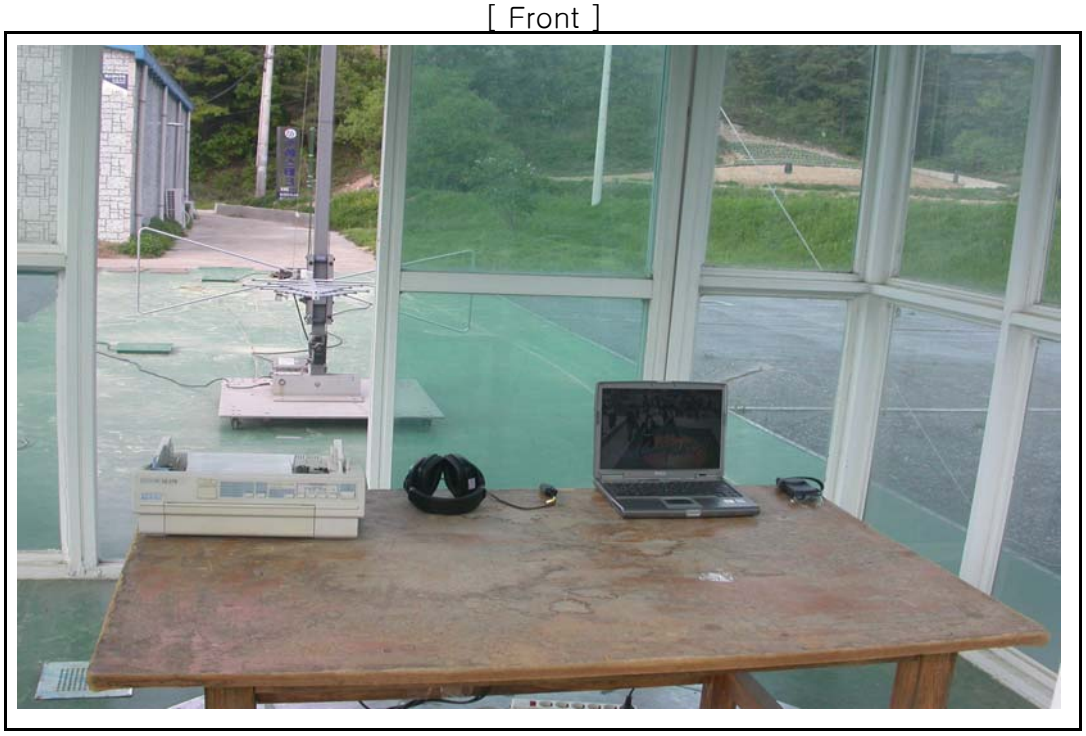

[Rear]

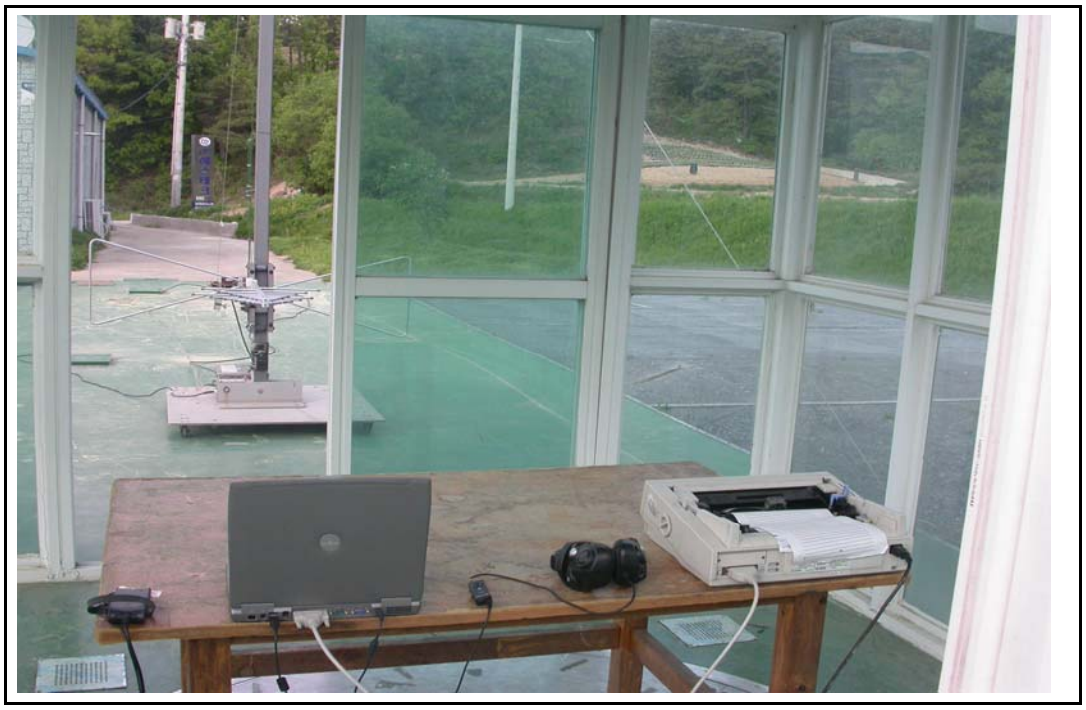

7.2 Setup for Conducted Test : 0.15 ~ 30 MHz

[Front]

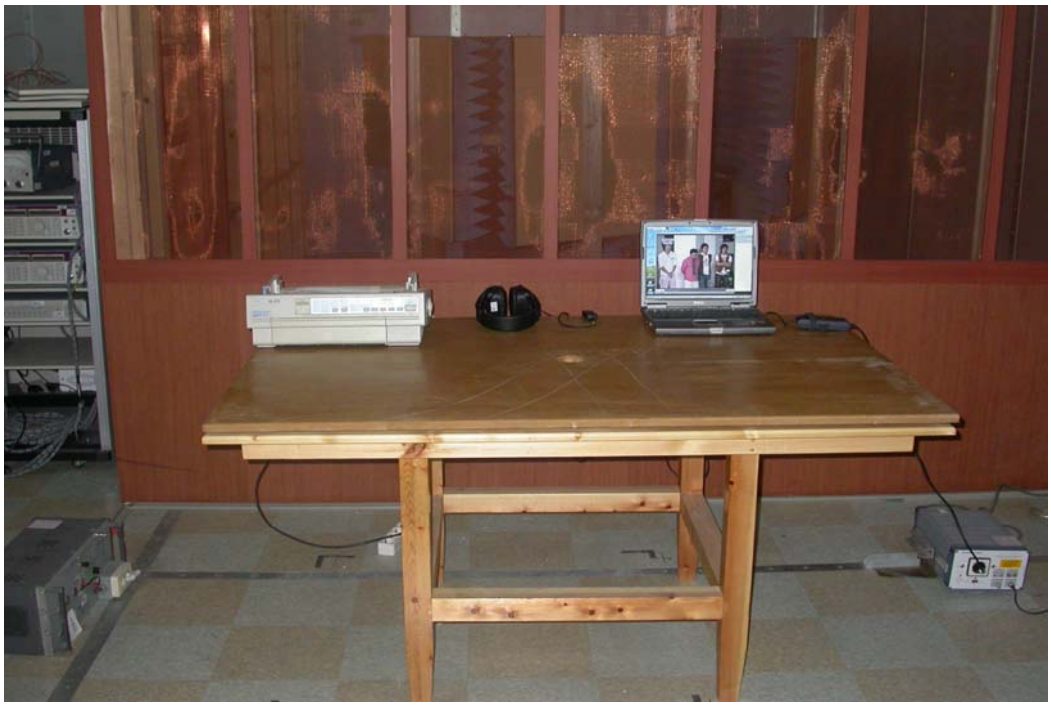

[Rear]

8. Photographs of EUT

[Front]

[Rear]

Appendix 1. Spectral diagram

*HOT

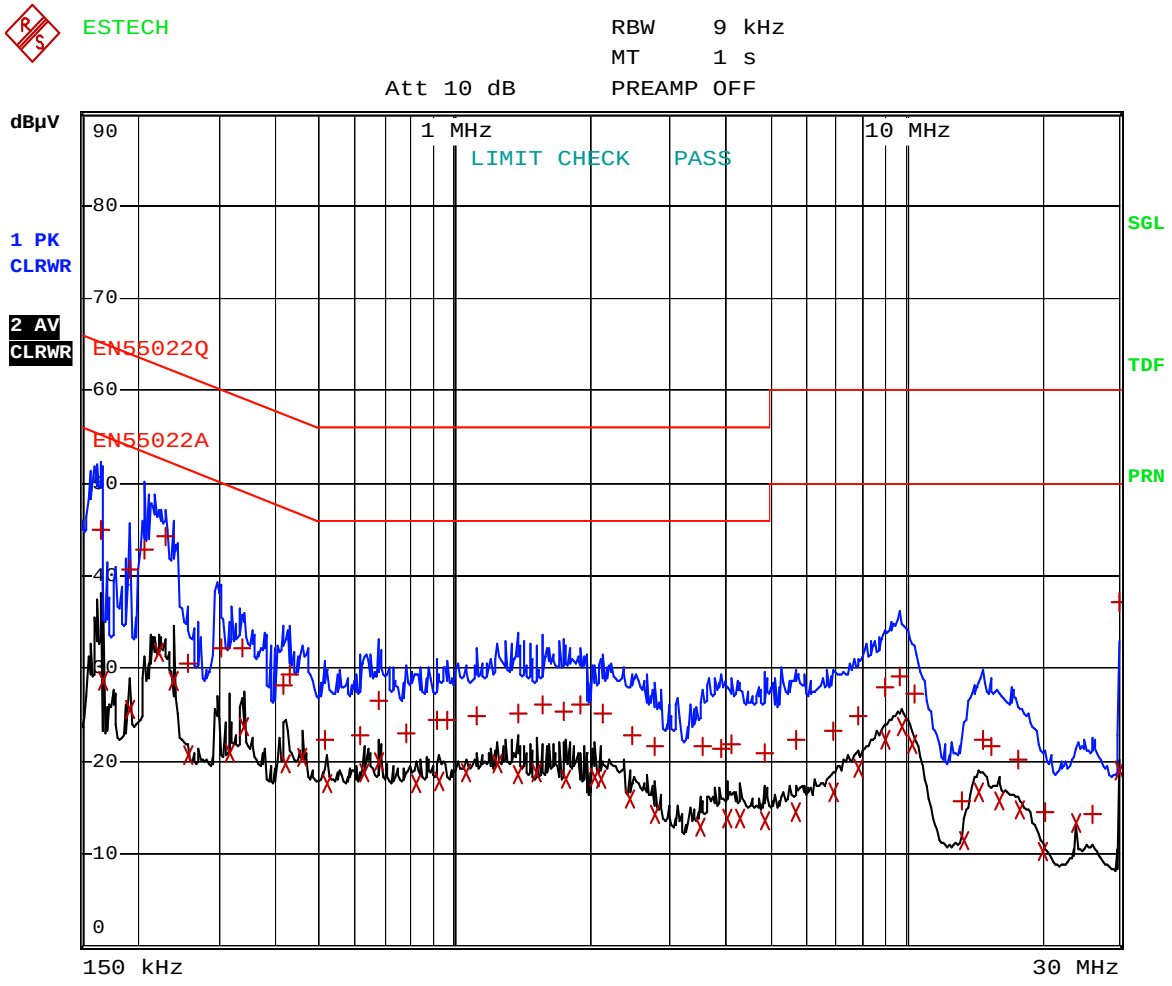

Comment: MCH-501U HOT
Date: 12.MAY.2006 10:24:02

*NEUTRAL

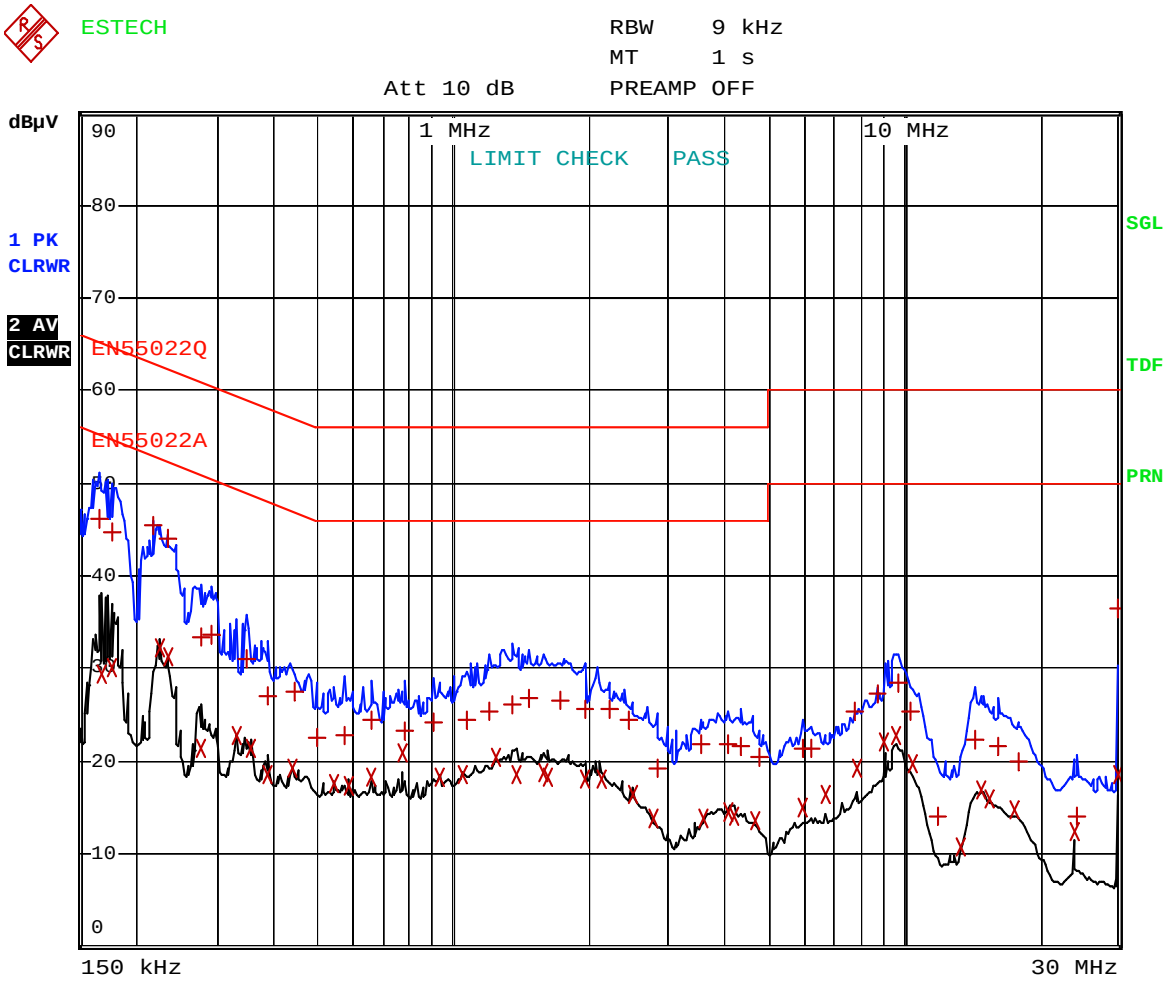

Comment: MCH-501U NEUTRAL
Date: 12.MAY.2006 10:12:14