BGM220P Wireless Gecko Bluetooth Module Data Sheet

The BGM220P is a module designed and built to meet the performance, security, and reliability requirements of battery-powered IoT products running on Bluetooth networks.

Based on the EFR32BG22 SoC, the BGM220P enables Bluetooth® Low Energy connectivity while delivering best-in-class RF range and performance, future-proof capability for feature and OTA firmware updates, enhanced security features, and low energy consumption.

BGM220P modules are a full solution that comes with fully-upgradeable, robust software stacks, world-wide regulatory certifications, advanced development and debugging tools, and support that will minimize and simplify the engineering and development of your end-products helping to accelerate their time-to-market.

The BGM220P is intended for a broad range of applications, including:

- Asset Tags and Beacons
- Sports, Fitness, and Wellness devices
- Portable Medical
- Connected Home
- Industrial and Building Automation
- Bluetooth mesh Low Power Node

KEY FEATURES

- Bluetooth 5.2
- Bluetooth mesh Low Power Node
- Built-in antenna
- Up to 8 dBm TX power
- -98.9 dBm BLE RX sensitivity at 1 Mbps
- 32-bit ARM Cortex-M33 core at up to 76.8 MHz
- 512/32 kB of Flash/RAM memory
- Optimal selection of MCU peripherals
- Up to 25 GPIO pins
- 12.9 mm x 15.0 mm

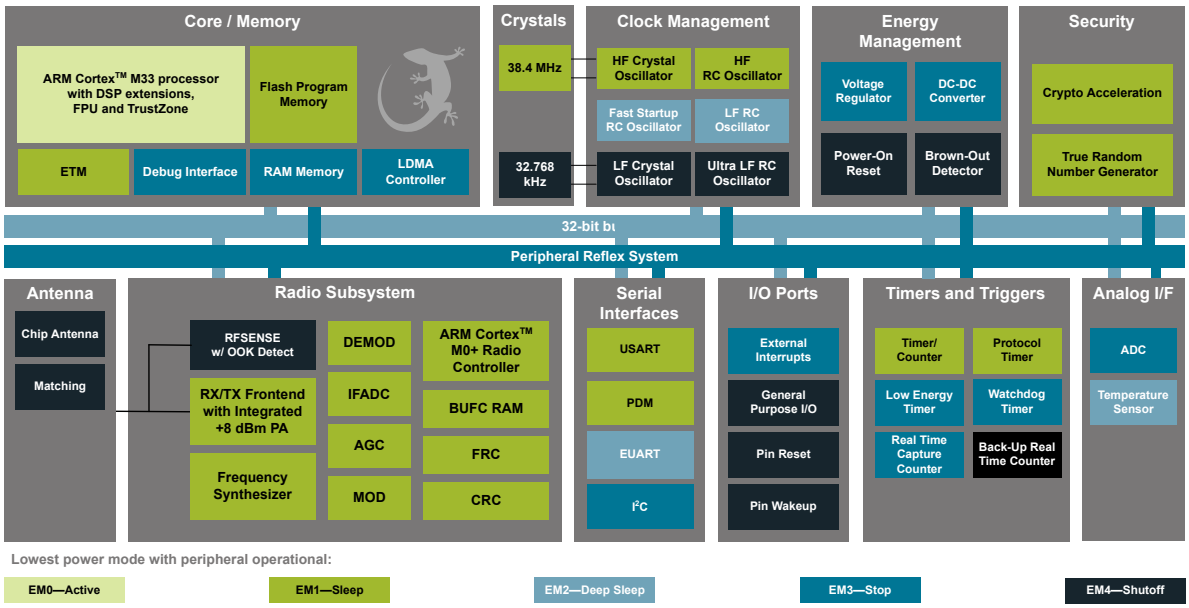

 Copyright © 2022 by Silicon Laboratories

1. Feature List

- **Supported Protocols**
  - Bluetooth Low Energy (Bluetooth 5.2)
    - Direction finding
    - 1M, 2M and LE Coded PHYs
  - Bluetooth Mesh Low Power Node
- **Wireless System-on-Chip**
  - 2.4 GHz radio
  - TX power up to +8 dBm
  - High-performance 32-bit ARM Cortex-M33® with DSP instruction and floating-point unit for efficient signal processing
  - 512 kB flash program memory
  - 32 kB RAM data memory
  - Embedded Trace Macrocell (ETM) for advanced debugging
- **High-Receiver Performance**
  - -106.7 dBm sensitivity (0.1% BER) at 125 kbps GFSK
  - -102.5 dBm sensitivity (0.1% BER) at 500 kbps GFSK
  - -98.9 dBm sensitivity (0.1% BER) at 1 Mbps GFSK
  - -96.2 dBm sensitivity (0.1% BER) at 2 Mbps GFSK
- **Low-Energy Consumption**
  - 4.3 mA RX current at 1 Mbps GFSK
  - 4.8 mA TX current at 0 dBm output power
  - 10.6 mA TX current at 8 dBm output power
  - 26 µA/MHz in Active Mode (EM0)
  - 1.40 µA EM2 DeepSleep current (RTCC running from LFXO, Full RAM retention)
- **Regulatory Certifications**
  - CE and UKCA - EU and UK
  - FCC - USA
  - ISED - Canada
  - MIC - Japan
  - KC - South Korea
- **Wide Operating Range**
  - 1.8 to 3.8 V
  - -40 to +105°C
- **Dimensions**
  - 12.9 mm x 15.0 mm x 2.2 mm
- **Security Features**
  - Secure Boot with Root of Trust and Secure Loader (RTSL)
  - Hardware Cryptographic Acceleration for AES128/256, SHA-1, SHA-2 (up to 256-bit), ECC (up to 256-bit), ECDSA, and ECDH
  - True Random Number Generator (TRNG) compliant with NIST SP800-90 and AIS-31
  - ARM® TrustZone®
  - Secure Debug with lock/unlock
- **Wide Selection of MCU Peripherals**
  - Analog to Digital Converter (ADC)
    - 12-bit @ 1 Msps
    - 16-bit @ 76.9 ksps
  - Up to 25 General Purpose I/O pins with output state retention and asynchronous interrupts
  - 8 Channel DMA Controller
  - 12 Channel Peripheral Reflex System (PRS)
  - 4 × 16-bit Timer/Counter with 3 Compare/Capture/PWM channels
  - 1 × 32-bit Timer/Counter with 3 Compare/Capture/PWM channels
  - 32-bit Real Time Counter
  - 24-bit Low Energy Timer for waveform generation
  - 1 × Watchdog Timer
  - 2 × Universal Synchronous/Asynchronous Receiver/Transmitter (UART/SPI/SmartCard (ISO 7816)/IrDA/I^2S)
  - 1 × Enhanced Universal Asynchronous Receiver/Transmitter (EUART)
  - 2 × I^2C interface with SMBus support
  - Digital microphone interface (PDM)
  - RFSENSE with selective OOK mode

2. Ordering Information

Table 2.1. Ordering Information

Ordering Code	Protocol Stack	TX Power Rating	Antenna	RF Shield	Flash (kB)	RAM (kB)	LF Clock	GPIO	Temp Range
BGM220PC22HNA2	Bluetooth 5.2 • Direction Finding Rx	8 dBm	Built-in	Yes	512	32	Crystal	24	-40 to 105 °C
BGM220PC22WGA2	Bluetooth 5.2	8 dBm	Built-in	Yes	352	32	Precision LFRCO	25	-40 to 85 °C

Note:

1. LE Long Range (125 kbps and 500 kbps) PHYs are only supported on part numbers which include direction-finding capability.
2. End-product manufacturers must verify that the module is configured to meet regulatory limits for each region in accordance with the formal certification test reports.
3. Devices are pre-programmed with BGAPI UART DFU bootloader v1.10.2.
4. Throughout this document, the devices in the table above may be referred to by their product family name (e.g. BGM220P), by model name (BGM220P22A), or by full ordering code.
5. All devices in the table above support transmitting CTE (Constant Tone Extension) which is required in Direction Finding, but only specific devices support CTE receive. These devices are marked with "Direction Finding Rx" in the Protocol Stack Column.
6. The **SLWSTK6103A Wireless Starter Kit** is available for BGM220P evaluation and development, as well as the **SLWRB4311A** radio board and the **BGM220-EK4314A** Explorer Kit.

Table of Contents

1. Feature List . . . 2

2. Ordering Information . . . 3

3. System Overview . . . 6

3.1 Block Diagram . . . 6

3.2 EFR32BG22 SoC . . . 7

3.3 Antenna . . . 7

3.4 Power Supply . . . 7

4. Electrical Characteristics . . . 8

4.1 Absolute Maximum Ratings . . . 8

4.2 General Operating Conditions . . . 9

4.2.1 DC-DC Operating Limits . . . 10

4.3 MCU Current Consumption with 3 V Supply . . . 11

4.4 Radio Current Consumption with 3 V Supply . . . 12

4.5 RF Transmitter General Characteristics for the 2.4 GHz Band . . . 13

4.6 RF Receiver General Characteristics for the 2.4 GHz Band . . . 14

4.7 RF Receiver Characteristics for Bluetooth Low Energy in the 2.4 GHz Band 1 Mbps Data Rate . . . 15

4.8 RF Receiver Characteristics for Bluetooth Low Energy in the 2.4 GHz Band 2 Mbps Data Rate . . . 16

4.9 RF Receiver Characteristics for Bluetooth Low Energy in the 2.4 GHz Band 500 kbps Data Rate . . . 17

4.10 RF Receiver Characteristics for Bluetooth Low Energy in the 2.4 GHz Band 125 kbps Data Rate . . . 18

4.11 High-Frequency Crystal . . . 19

4.12 Low-Frequency Crystal . . . 19

4.13 Precision Low Frequency RC Oscillator (LFRCO) . . . 19

4.14 GPIO Pins . . . 20

4.15 Microcontroller Peripherals . . . 21

4.16 Typical Performance Curves . . . 21

4.16.1 Antenna Radiation and Efficiency . . . 22

5. Reference Diagrams . . . 23

5.1 Network Co-Processor (NCP) Application with UART Host . . . 23

5.2 SoC Application . . . 24

6. Pin Definitions . . . 25

6.1 31-Pin PCB Module With LF Crystal Device Pinout . . . 25

6.2 31-Pin PCB Module With Precision LFRCO Device Pinout . . . 27

6.3 Alternate Function Table . . . 28

6.4 Analog Peripheral Connectivity . . . 29

6.5 Digital Peripheral Connectivity . . . 30

7. Design Guidelines . . . 33
7.1 Layout and Placement . . . 33
7.2 Proximity to Other Materials . . . 34
7.3 Proximity to Human Body . . . 34
8. Package Specifications . . . 35
8.1 Dimensions . . . 35
8.2 PCB Land Pattern . . . 36
8.3 Package Marking . . . 37
9. Soldering Recommendations . . . 38
10. Tape and Reel . . . 39
11. Certifications . . . 40
11.1 Qualified Antennas . . . 40
11.2 EU and UK - CE and UKCA . . . 40
11.3 USA - FCC . . . 40
11.4 ISED Canada . . . 43
11.5 Proximity to Human Body . . . 45
11.6 Japan - MIC . . . 46
11.7 South Korea - KC . . . 47
11.8 Bluetooth Qualification . . . 47
12. Revision History . . . 48

3. System Overview

3.1 Block Diagram

The BGM220P module combines an energy-friendly MCU with a highly integrated radio transceiver in a PCB module with a robust, integrated antenna. This section gives a short introduction to the features of the module.

The block diagram for the BGM220P module is shown in Figure 3.1 BGM220P Block Diagram on page 6. The wireless module includes the EFR32BG22 wirelss System on a Chip (SoC), required decoupling capacitors and inductors, 38.4 MHz and 32.768 kHz crystals, RF matching circuit, and integrated chip antenna.

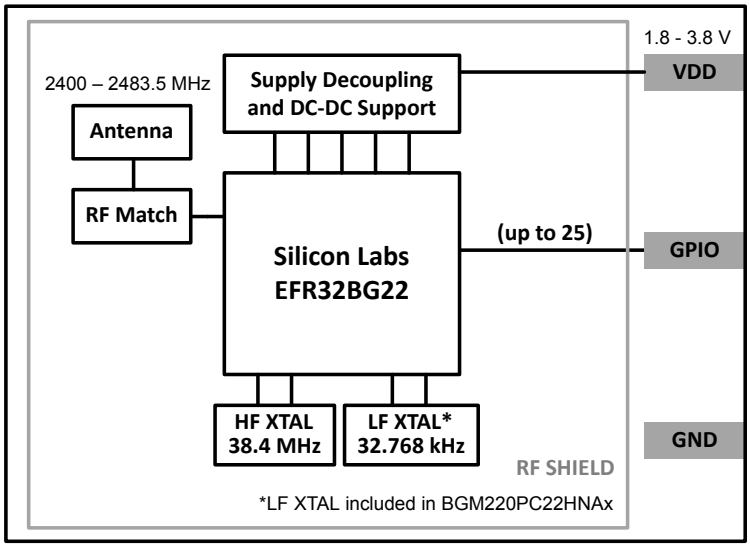

Figure 3.1. BGM220P Block Diagram

A simplified internal schematic for the BGM220P module is shown in Figure 3.2 BGM220P Module Schematic on page 6.

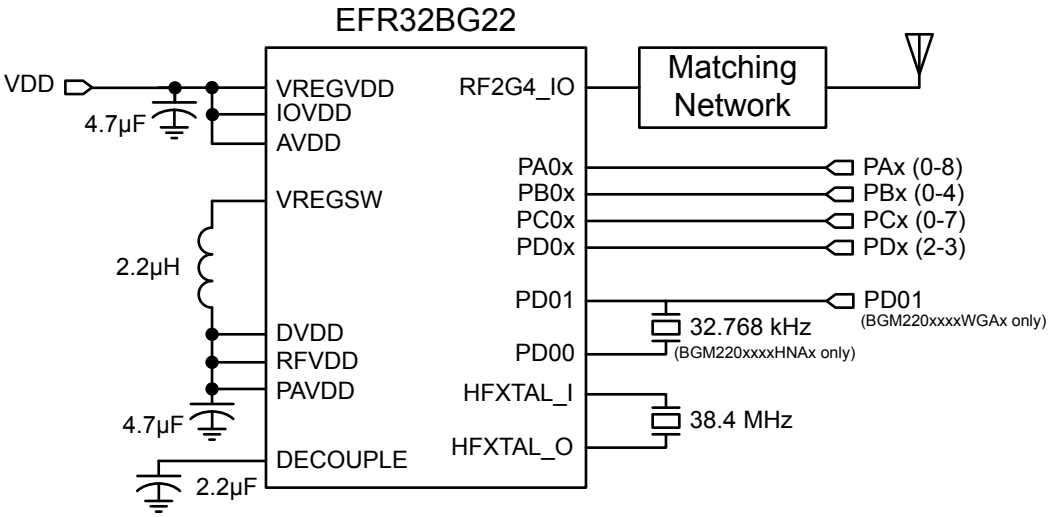

Figure 3.2. BGM220P Module Schematic

3.2 EFR32BG22 SoC

The EFR32BG22 SoC features a 32-bit ARM Cortex M33 core, a 2.4 GHz high-performance radio, 512 kB of flash memory, a rich set of MCU peripherals, and various clock management and serial interfacing options. Consult the EFR32xG22 Wireless Gecko Reference Manual and the EFR32BG22 Data Sheet for details.

3.3 Antenna

BGM220P modules include a ceramic chip antenna on board with the characteristics detailed in the table below.

Table 3.1. Antenna Efficiency and Peak Gain

Parameter	With optimal layout	Note
Efficiency	-1 dB	Antenna efficiency, gain and radiation pattern are highly dependent on the application PCB layout and mechanical design. Refer to Design Guidelines for recommendations to achieve optimal antenna performance.
Peak gain	1.86 dBi	

3.4 Power Supply

The BGM220P requires a single nominal supply level of 3.0 V to operate. All necessary decoupling and filtering components are included in the module.

4. Electrical Characteristics

All electrical parameters in all tables are specified under the following conditions, unless stated otherwise:

- Typical values are based on T_A=25 °C and VDD supply at 3.0 V, by production test and/or technology characterization.
- Radio performance numbers are measured in conducted mode, based on Silicon Laboratories reference designs using output power-specific external RF impedance-matching networks for interfacing to a 50 Ω antenna.
- Minimum and maximum values represent the worst conditions across supply voltage, process variation, and operating temperature, unless stated otherwise.

4.1 Absolute Maximum Ratings

Stresses beyond those listed below may cause permanent damage to the device. This is a stress rating only and functional operation of the devices at those or any other conditions beyond those indicated in the operation listings of this specification is not implied. Exposure to maximum rating conditions for extended periods may affect device reliability. For more information on the available quality and reliability data, see the Quality and Reliability Monitor Report at http://www.silabs.com/support/quality/pages/default.aspx.

Table 4.1. Absolute Maximum Ratings

Parameter	Symbol	Test Condition	Min	Typ	Max	Unit
Storage temperature range	T_{STG}		-40	—	+105	°C
Voltage on VDD supply pin	V_{DDMAX}		-0.3	—	3.8	V
Voltage ramp rate on VDD supply pin	$V_{DDRAMPMAX}$		—	—	1.0	V / µs
DC voltage on any GPIO pin	V_{DIGPIN}		-0.3	—	V_{VDD} + 0.3	V
Total current into VDD pin	I_{VDDMAX}	Source	—	—	200	mA
Total current into GND pin	I_{GNDMAX}	Sink	—	—	200	mA
Current per I/O pin	I_{IOMAX}	Sink	—	—	50	mA
		Source	—	—	50	mA
Current for all I/O pins	$I_{IOALLMAX}$	Sink	—	—	200	mA
		Source	—	—	200	mA

4.2 General Operating Conditions

This table specifies the general operating temperature range and supply voltage range for all supplies. The minimum and maximum values of all other tables are specifed over this operating range, unless otherwise noted.

Table 4.2. General Operating Conditions

Parameter	Symbol	Test Condition	Min	Typ	Max	Unit
Operating ambient temperature range	T_A	-G temperature grade	-40	—	+85	°C
		-N temperature grade	-40	—	+105	°C
VDD operating supply voltage	V_{VDD}	DCDC in regulation[1]	2.2	3.0	3.8	V
		DCDC in bypass	1.8	3.0	3.8	V
HCLK and SYSCLK frequency	f_{HCLK}	VSCALE2, MODE = WS1	—	—	76.8	MHz
		VSCALE2, MODE = WS0	—	—	40	MHz
		VSCALE1, MODE = WS0	—	—	40	MHz
PCLK frequency	f_{PCLK}	VSCALE2	—	—	50	MHz
		VSCALE1	—	—	40	MHz
EM01 Group A clock frequency	$f_{EM01GRPACLK}$	VSCALE2	—	—	76.8	MHz
		VSCALE1	—	—	40	MHz
EM01 Group B clock frequency	$f_{EM01GRPBCLK}$	VSCALE2	—	—	76.8	MHz
		VSCALE1	—	—	40	MHz
Radio HCLK frequency	f_{RHCLK}	VSCALE2 or VSCALE1	—	38.4	—	MHz

Note:

1. The supported maximum V_{VDD} in regulation mode is a function of temperature and 10-year lifetime average load current. See more details in 4.2.1 DC-DC Operating Limits.

4.2.1 DC-DC Operating Limits

The maximum supported voltage on the VDD supply pin is limited under certain conditions. Maximum input voltage is a function of temperature and the average load current over a 10-year lifetime. Figure 4.1 Lifetime average load current limit vs. Maximum input voltage on page 10 shows the safe operating region under specific conditions. Exceeding this safe operating range may impact the reliability and performance of the DC-DC converter.

The average load current for an application can typically be determined by examining the current profile during the time the device is powered. For example, an application that is continuously powered which spends 99% of the time asleep consuming 2 µA and 1% of the time active and consuming 10 mA has an average lifetime load current of about 102 µA.

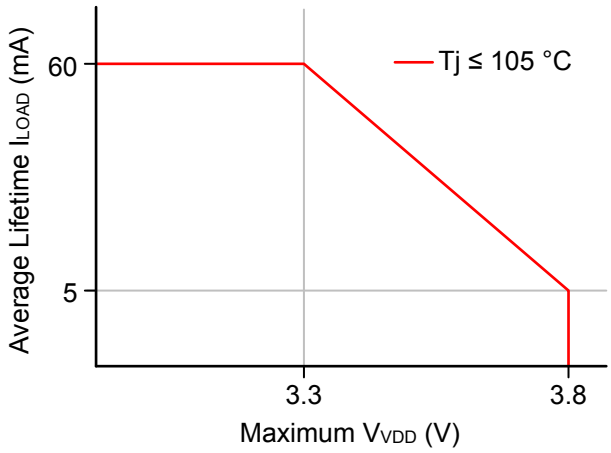

Figure 4.1. Lifetime average load current limit vs. Maximum input voltage

The minimum input voltage for the DC-DC in EM0/EM1 mode is a function of the maximum load current, and the peak current setting. Figure 4.2 Transient maximum load current vs. Minimum input voltage on page 10 shows the max load current vs. input voltage for different DC-DC peak inductor current settings.

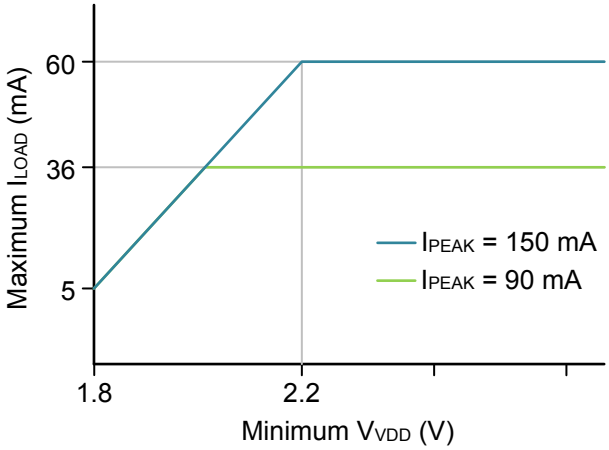

Figure 4.2. Transient maximum load current vs. Minimum input voltage

4.3 MCU Current Consumption with 3 V Supply

Unless otherwise indicated, typical conditions are: Module supply voltage = 3.0 V. Voltage scaling level = VSCALE1. T_A = 25 °C. Minimum and maximum values in this table represent the worst conditions across process variation at T_A = 25 °C.

Table 4.3. MCU Current Consumption with 3 V Supply

Parameter	Symbol	Test Condition	Min	Typ	Max	Unit
Current consumption in EM0 mode with all peripherals disabled	I_{ACTIVE}	76.8 MHz HFRCO w/ DPLL referenced to 38.4 MHz crystal, CPU running while loop from flash, VSCALE2	—	27	—	µA/MHz
		76.8 MHz HFRCO w/ DPLL referenced to 38.4 MHz crystal, CPU running CoreMark loop from flash, VSCALE2	—	37	—	µA/MHz
		38.4 MHz crystal, CPU running Prime from flash	—	28	—	µA/MHz
		38.4 MHz crystal, CPU running while loop from flash	—	26	—	µA/MHz
		38.4 MHz crystal, CPU running CoreMark loop from flash	—	38	—	µA/MHz
		38 MHz HFRCO, CPU running while loop from flash	—	22	—	µA/MHz
		76.8 MHz HFRCO w/ DPLL referenced to 38.4 MHz crystal, CPU running Prime from flash, VSCALE2	—	28	—	µA/MHz
Current consumption in EM1 mode with all peripherals disabled	I_{EM1}	76.8 MHz HFRCO w/ DPLL referenced to 38.4 MHz crystal, VSCALE2	—	17	—	µA/MHz
		38.4 MHz crystal	—	17	—	µA/MHz
		38 MHz HFRCO	—	13	—	µA/MHz
Current consumption in EM2 mode, VSCALE0	I_{EM2_VS}	Full RAM retention and RTC running from LFXO	—	1.40	—	µA
		Full RAM retention and RTC running from LFRCO	—	1.40	—	µA
		Full RAM retention and RTC running from LFRCO in precision mode	—	1.75	—	µA
		24 kB RAM retention and RTC running from LFXO	—	1.32	—	µA
		24 kB RAM retention and RTC running from LFRCO in precision mode	—	1.66	—	µA
		8 kB RAM retention and RTC running from LFXO	—	1.21	—	µA
		8 kB RAM retention and RTC running from LFRCO	—	1.20	—	µA
Current consumption in EM3 mode, VSCALE0	I_{EM3_VS}	8 kB RAM retention and RTC running from ULFRCO	—	1.05	—	µA

Parameter	Symbol	Test Condition	Min	Typ	Max	Unit
Current consumption in EM4 mode	I_{EM4}	No BURTC, No LF Oscillator, DCDC bypassed	—	0.17	—	µA
Additional current in EM2 or EM3 when any peripheral in PD0B is enabled[1]	I_{PD0B_VS}		—	0.37	—	µA

Note:

1. Extra current consumed by power domain. Does not include current associated with the enabled peripherals. See for a list of the peripherals in each power domain.

4.4 Radio Current Consumption with 3 V Supply

RF current consumption measured with MCU in EM1, HCLK = 38.4 MHz, and all MCU peripherals disabled. Unless otherwise indicated, typical conditions are: VDD = 3.0 V. T_A = 25 °C. Minimum and maximum values in this table represent the worst conditions across process variation at T_A = 25 °C.

Table 4.4. Radio Current Consumption with 3 V Supply

Parameter	Symbol	Test Condition	Min	Typ	Max	Unit
System current consumption in receive mode, active packet reception	I_{RX_ACTIVE}	125 kbit/s, 2GFSK, f = 2.4 GHz, Bluetooth stack running	—	4.5	—	mA
		500 kbit/s, 2GFSK, f = 2.4 GHz, Bluetooth stack running	—	4.5	—	mA
		1 Mbit/s, 2GFSK, f = 2.4 GHz, Bluetooth stack running	—	4.3	—	mA
		2 Mbit/s, 2GFSK, f = 2.4 GHz, Bluetooth stack running	—	4.8	—	mA
System current consumption in receive mode, listening for packet	I_{RX_LISTEN}	125 kbit/s, 2GFSK, f = 2.4 GHz, Bluetooth stack running	—	4.4	—	mA
		500 kbit/s, 2GFSK, f = 2.4 GHz, Bluetooth stack running	—	4.4	—	mA
		1 Mbit/s, 2GFSK, f = 2.4 GHz, Bluetooth stack running	—	4.2	—	mA
		2 Mbit/s, 2GFSK, f = 2.4 GHz, Bluetooth stack running	—	4.7	—	mA
System current consumption in transmit mode	I_{TX}	f = 2.4 GHz, CW, 0 dBm output power	—	4.8	—	mA
		f = 2.4 GHz, CW, 6 dBm output power	—	8.8	—	mA
		f = 2.4 GHz, CW, 8 dBm output power	—	10.6	—	mA

4.5 RF Transmitter General Characteristics for the 2.4 GHz Band

Unless otherwise indicated, typical conditions are: T_A = 25 °C, VDD = 3.0V. RF center frequency 2.45 GHz.

Table 4.5. RF Transmitter General Characteristics for the 2.4 GHz Band

Parameter	Symbol	Test Condition	Min	Typ	Max	Unit
RF tuning frequency range	F_{RANGE}		2400	—	2483.5	MHz
Maximum TX power[1]	$POUT_{MAX}$	8 dBm output power	—	8.2	—	dBm
		6 dBm output power	—	6.4	—	dBm
		0 dBm output power	—	0.3	—	dBm
Minimum active TX Power	$POUT_{MIN}$	8 dBm output power	—	-27	—	dBm
		6 dBm output power	—	-27	—	dBm
		0 dBm output power	—	-28	—	dBm
Output power variation vs VDD supply voltage variation, frequency = 2450 MHz	$POUT_{VAR_V}$	8 dBm output power with VDD voltage swept from 1.8 V to 3.0 V	—	0.04	—	dB
		6 dBm output power with VDD voltage swept from 1.8 V to 3.0 V	—	0.04	—	dB
		0 dBm output power, with VDD voltage swept from 1.8 to 3.0 V	—	0.04	—	dB
Output power variation vs temperature, Frequency = 2450 MHz	$POUT_{VAR_T}$	8 dBm output power, (-40 to +105 °C)	—	0.9	—	dB
		6 dBm output power, (-40 to +105 °C)	—	0.3	—	dB
		0 dBm output power, (-40 to +105 °C)	—	1.3	—	dB
		8 dBm output power, (-40 to +85 °C)	—	0.8	—	dB
		6 dBm output power, (-40 to +85 °C)	—	0.4	—	dB
		0 dBm output power, (-40 to +85 °C)	—	1.0	—	dB
Output power variation vs RF frequency	$POUT_{VAR_F}$	8 dBm output power	—	0.2	—	dB
		6 dBm output power	—	0.2	—	dB
		0 dBm output power	—	0.2	—	dB

Note:

1. Supported transmit power levels are determined by the ordering part number (OPN). Transmit power ratings for all devices covered in this data sheet can be found in the Max TX Power column of the Ordering Information Table.

4.6 RF Receiver General Characteristics for the 2.4 GHz Band

Unless otherwise indicated, typical conditions are: T_A = 25 °C, VDD = 3.0V. RF center frequency 2.45 GHz.

Table 4.6. RF Receiver General Characteristics for the 2.4 GHz Band

Parameter	Symbol	Test Condition	Min	Typ	Max	Unit
RF tuning frequency range	F_{RANGE}		2400	—	2483.5	MHz

4.7 RF Receiver Characteristics for Bluetooth Low Energy in the 2.4 GHz Band 1 Mbps Data Rate

Unless otherwise indicated, typical conditions are: T_A = 25 °C, VDD = 3.0V. RF center frequency 2.45 GHz.

Table 4.7. RF Receiver Characteristics for Bluetooth Low Energy in the 2.4 GHz Band 1 Mbps Data Rate

Parameter	Symbol	Test Condition	Min	Typ	Max	Unit
Max usable receiver input level	SAT	Signal is reference signal[1]	—	10	—	dBm
Sensitivity	SENS	Signal is reference signal, 37 byte payload[2]	—	-98.9	—	dBm
		Signal is reference signal, 255 byte payload[1]	—	-97.4	—	dBm
		With non-ideal signals[3 1]	—	-96.9	—	dBm
Signal to co-channel interferer	C/I_{CC}	(see notes)[1 4]	—	8.7	—	dB
N ± 1 Adjacent channel selectivity	C/I_1	Interferer is reference signal at +1 MHz offset[1 5 4 6]	—	-6.6	—	dB
		Interferer is reference signal at -1 MHz offset[1 5 4 6]	—	-6.5	—	dB
N ± 2 Alternate channel selectivity	C/I_2	Interferer is reference signal at +2 MHz offset[1 5 4 6]	—	-40.9	—	dB
		Interferer is reference signal at -2 MHz offset[1 5 4 6]	—	-39.9	—	dB
N ± 3 Alternate channel selectivity	C/I_3	Interferer is reference signal at +3 MHz offset[1 5 4 6]	—	-45.9	—	dB
		Interferer is reference signal at -3 MHz offset[1 5 4 6]	—	-46.2	—	dB
Selectivity to image frequency	C/I_{IM}	Interferer is reference signal at image frequency with 1 MHz precision[1 6]	—	-23.5	—	dB
Selectivity to image frequency ± 1 MHz	C/I_{IM_1}	Interferer is reference signal at image frequency +1 MHz with 1 MHz precision[1 6]	—	-40.9	—	dB
		Interferer is reference signal at image frequency -1 MHz with 1 MHz precision[1 6]	—	-6.6	—	dB
Intermodulation performance	IM	n = 3 (see note[7])	—	-17.1	—	dBm

Note:

1. 0.017% Bit Error Rate.
2. 0.1% Bit Error Rate.
3. With non-ideal signals as specified in Bluetooth Test Specification RF-PHY.TS.5.0.1 section 4.7.1
4. Desired signal -67 dBm.
5. Desired frequency 2402 MHz ≤ Fc ≤ 2480 MHz.
6. With allowed exceptions.
7. As specified in Bluetooth Core specification version 5.1, Vol 6, Part A, Section 4.4

4.8 RF Receiver Characteristics for Bluetooth Low Energy in the 2.4 GHz Band 2 Mbps Data Rate

Unless otherwise indicated, typical conditions are: T_A = 25 °C, VDD = 3.0V. RF center frequency 2.45 GHz.

Table 4.8. RF Receiver Characteristics for Bluetooth Low Energy in the 2.4 GHz Band 2 Mbps Data Rate

Parameter	Symbol	Test Condition	Min	Typ	Max	Unit
Max usable receiver input level	SAT	Signal is reference signal[1]	—	10	—	dBm
Sensitivity	SENS	Signal is reference signal, 37 byte payload[2]	—	-96.2	—	dBm
		Signal is reference signal, 255 byte payload[1]	—	-94.6	—	dBm
		With non-ideal signals[3 1]	—	-94.4	—	dBm
Signal to co-channel interferer	C/I_{CC}	(see notes)[1 4]	—	8.8	—	dB
N ± 1 Adjacent channel selectivity	C/I_1	Interferer is reference signal at +2 MHz offset[1 5 4 6]	—	-9.2	—	dB
		Interferer is reference signal at -2 MHz offset[1 5 4 6]	—	-6.6	—	dB
N ± 2 Alternate channel selectivity	C/I_2	Interferer is reference signal at +4 MHz offset[1 5 4 6]	—	-43.3	—	dB
		Interferer is reference signal at -4 MHz offset[1 5 4 6]	—	-44.0	—	dB
N ± 3 Alternate channel selectivity	C/I_3	Interferer is reference signal at +6 MHz offset[1 5 4 6]	—	-48.6	—	dB
		Interferer is reference signal at -6 MHz offset[1 5 4 6]	—	-50.7	—	dB
Selectivity to image frequency	C/I_{IM}	Interferer is reference signal at image frequency with 1 MHz precision[1 6]	—	-23.8	—	dB
Selectivity to image frequency ± 2 MHz	C/I_{IM_1}	Interferer is reference signal at image frequency +2 MHz with 1 MHz precision[1 6]	—	-43.3	—	dB
		Interferer is reference signal at image frequency -2 MHz with 1 MHz precision[1 6]	—	-9.2	—	dB
Intermodulation performance	IM	n = 3 (see note[7])	—	-18.8	—	dBm

Note:

1. 0.017% Bit Error Rate.
2. 0.1% Bit Error Rate.
3. With non-ideal signals as specified in Bluetooth Test Specification RF-PHY.TS.5.0.1 section 4.7.1
4. Desired signal -64 dBm.
5. Desired frequency 2402 MHz ≤ Fc ≤ 2480 MHz.
6. With allowed exceptions.
7. As specified in Bluetooth Core specification version 5.1, Vol 6, Part A, Section 4.4

4.9 RF Receiver Characteristics for Bluetooth Low Energy in the 2.4 GHz Band 500 kbps Data Rate

Unless otherwise indicated, typical conditions are: T_A = 25 °C, VDD = 3.0V. RF center frequency 2.45 GHz.

Table 4.9. RF Receiver Characteristics for Bluetooth Low Energy in the 2.4 GHz Band 500 kbps Data Rate

Parameter	Symbol	Test Condition	Min	Typ	Max	Unit
Max usable receiver input level	SAT	Signal is reference signal[1]	—	10	—	dBm
Sensitivity	SENS	Signal is reference signal, 37 byte payload[2]	—	-102.5	—	dBm
		Signal is reference signal, 255 byte payload[1]	—	-101.2	—	dBm
		With non-ideal signals[3] [1]	—	-100.2	—	dBm
Signal to co-channel interferer	C/I_{CC}	(see notes)[1] [4]	—	2.7	—	dB
N ± 1 Adjacent channel selectivity	C/I_1	Interferer is reference signal at +1 MHz offset[1] [5] [4] [6]	—	-8.0	—	dB
		Interferer is reference signal at -1 MHz offset[1] [5] [4] [6]	—	-7.9	—	dB
N ± 2 Alternate channel selectivity	C/I_2	Interferer is reference signal at +2 MHz offset[1] [5] [4] [6]	—	-46.5	—	dB
		Interferer is reference signal at -2 MHz offset[1] [5] [4] [6]	—	-49.9	—	dB
N ± 3 Alternate channel selectivity	C/I_3	Interferer is reference signal at +3 MHz offset[1] [5] [4] [6]	—	-48.9	—	dB
		Interferer is reference signal at -3 MHz offset[1] [5] [4] [6]	—	-53.8	—	dB
Selectivity to image frequency	C/I_{IM}	Interferer is reference signal at image frequency with 1 MHz precision[1] [6]	—	-48.3	—	dB
Selectivity to image frequency ± 1 MHz	C/I_{IM_1}	Interferer is reference signal at image frequency +1 MHz with 1 MHz precision[1] [6]	—	-49.9	—	dB
		Interferer is reference signal at image frequency -1 MHz with 1 MHz precision[1] [6]	—	-46.5	—	dB

Note:

1. 0.017% Bit Error Rate.
2. 0.1% Bit Error Rate.
3. With non-ideal signals as specified in Bluetooth Test Specification RF-PHY.TS.5.0.1 section 4.7.1
4. Desired signal -72 dBm.
5. Desired frequency 2402 MHz ≤ Fc ≤ 2480 MHz.
6. With allowed exceptions.

4.10 RF Receiver Characteristics for Bluetooth Low Energy in the 2.4 GHz Band 125 kbps Data Rate

Unless otherwise indicated, typical conditions are: T_A = 25 °C, VDD = 3.0V. RF center frequency 2.45 GHz.

Table 4.10. RF Receiver Characteristics for Bluetooth Low Energy in the 2.4 GHz Band 125 kbps Data Rate

Parameter	Symbol	Test Condition	Min	Typ	Max	Unit
Max usable receiver input level	SAT	Signal is reference signal[1]	—	10	—	dBm
Sensitivity	SENS	Signal is reference signal, 37 byte payload[2]	—	-106.7	—	dBm
		Signal is reference signal, 255 byte payload[1]	—	-106.4	—	dBm
		With non-ideal signals[3] [1]	—	-105.8	—	dBm
Signal to co-channel interferer	C/I_{CC}	(see notes)[1] [4]	—	0.9	—	dB
N ± 1 Adjacent channel selectivity	C/I_1	Interferer is reference signal at +1 MHz offset[1] [5] [4] [6]	—	-13.6	—	dB
		Interferer is reference signal at -1 MHz offset[1] [5] [4] [6]	—	-13.4	—	dB
N ± 2 Alternate channel selectivity	C/I_2	Interferer is reference signal at +2 MHz offset[1] [5] [4] [6]	—	-52.6	—	dB
		Interferer is reference signal at -2 MHz offset[1] [5] [4] [6]	—	-55.8	—	dB
N ± 3 Alternate channel selectivity	C/I_3	Interferer is reference signal at +3 MHz offset[1] [5] [4] [6]	—	-53.7	—	dB
		Interferer is reference signal at -3 MHz offset[1] [5] [4] [6]	—	-59.0	—	dB
Selectivity to image frequency	C/I_{IM}	Interferer is reference signal at image frequency with 1 MHz precision[1] [6]	—	-52.7	—	dB
Selectivity to image frequency ± 1 MHz	C/I_{IM_1}	Interferer is reference signal at image frequency +1 MHz with 1 MHz precision[1] [6]	—	-53.7	—	dB
		Interferer is reference signal at image frequency -1 MHz with 1 MHz precision[1] [6]	—	-52.6	—	dB

Note:

1. 0.017% Bit Error Rate.
2. 0.1% Bit Error Rate.
3. With non-ideal signals as specified in Bluetooth Test Specification RF-PHY.TS.5.0.1 section 4.7.1
4. Desired signal -79 dBm.
5. Desired frequency 2402 MHz ≤ Fc ≤ 2480 MHz.
6. With allowed exceptions.

4.11 High-Frequency Crystal

Table 4.11. High-Frequency Crystal

Parameter	Symbol	Test Condition	Min	Typ	Max	Unit
Crystal frequency	f_{HFXTAL}		—	38.4	—	MHz
Initial calibrated accuracy	ACC_{HFXTAL}		-10	+/-5	10	ppm
Temperature drift	$DRIFT_{HFXTAL}$	Across specified temperature range	-20	—	20	ppm

4.12 Low-Frequency Crystal

Table 4.12. Low-Frequency Crystal

Parameter	Symbol	Test Condition	Min	Typ	Max	Unit
Crystal frequency[1]	f_{LFXTAL}		—	32.768	—	kHz
Temperature drift	$DRIFT_{LFXTAL}$	-40 °C to +85 °C	-100	—	100	ppm
		-40 °C to +105 °C	-150	—	150	ppm

Note:
1. Nominal frequency tolerance of the crystal is ± 20 ppm.

4.13 Precision Low Frequency RC Oscillator (LFRCO)

Table 4.13. Precision Low Frequency RC Oscillator (LFRCO)

Parameter	Symbol	Test Condition	Min	Typ	Max	Unit
Nominal oscillation frequency	F_{LFRCO}		—	32.768	—	kHz
Frequency accuracy	F_{LFRCO_ACC}	Normal mode	-3	—	3	%
		Precision mode[1], across operating temperature range[2]	-500	—	500	ppm
Startup time	$t_{STARTUP}$	Normal mode	—	204	—	µs
		Precision mode[1]	—	11.7	—	ms
Current consumption	I_{LFRCO}	Normal mode	—	175	—	nA
		Precision mode[1], T = stable at 25 °C [3]	—	655	—	nA

Note:
1. The LFRCO operates in high-precision mode when CFG_HIGHPRECEN is set to 1. High-precision mode is not available in EM4.
2. Includes ± 40 ppm frequency tolerance of the HFXO crystal.
3. Includes periodic re-calibration against HFXO crystal oscillator.

4.14 GPIO Pins

Unless otherwise indicated, typical conditions are: VDD = 3.0 V.

Table 4.14. GPIO Pins

Parameter	Symbol	Test Condition	Min	Typ	Max	Unit
Leakage current	I_{LEAK_IO}	MODEx = DISABLED, VDD = 3.0 V	—	2.5	—	nA
Input low voltage[1]	V_{IL}	Any GPIO pin	—	—	0.3 * VDD	V
		RESETn	—	—	0.3 * DVDD	V
Input high voltage[1]	V_{IH}	Any GPIO pin	0.7 * VDD	—	—	V
		RESETn	0.7 * DVDD	—	—	V
Hysteresis of input voltage	V_{HYS}	Any GPIO pin	0.05 * VDD	—	—	V
		RESETn	0.05 * DVDD	—	—	V
Output low voltage	V_{OL}	Sinking 20mA, VDD = 3.0 V	—	—	0.2 * VDD	V
		Sinking 8mA, VDD = 1.62 V	—	—	0.4 * VDD	V
Output high voltage	V_{OH}	Sourcing 20mA, VDD = 3.0 V	0.8 * VDD	—	—	V
		Sourcing 8mA, VDD = 1.62 V	0.6 * VDD	—	—	V
GPIO rise time	T_{GPIO_RISE}	VDD = 3.0V, C_{load} = 50pF, SLEW-RATE = 4, 10% to 90%	—	8.4	—	ns
		VDD = 1.7V, C_{load} = 50pF, SLEW-RATE = 4, 10% to 90%	—	13	—	ns
GPIO fall time	T_{GPIO_FALL}	VDD = 3.0V, C_{load} = 50pF, SLEW-RATE = 4, 90% to 10%	—	7.1	—	ns
		VDD = 1.7V, C_{load} = 50pF, SLEW-RATE = 4, 90% to 10%	—	11.9	—	ns
Pull up/down resistance	R_{PULL}	GPIO pull-up to VDD: MODEn = DISABLE, DOUT=1. GPIO pull-down to VSS: MODEn = WIRE-DORPULLDOWN, DOUT = 0. RESETn pin pull-up to DVDD.	35	44	55	kΩ
Maximum filtered glitch width	T_{GF}	MODE = INPUT, DOUT = 1	—	27	—	ns
RESETn low time to ensure pin reset	T_{RESET}		100	—	—	ns

Note:

1. GPIO input thresholds are proportional to the VDD pin. RESETn input thresholds are proportional to the internal DVDD supply, which is generated by the DC-DC converter. DVDD is equal to 1.8 V when DC-DC is active and bypassed to VDD when DC-DC is inactive.

4.15 Microcontroller Peripherals

The MCU peripherals set available in BGM220P modules includes:

- ADC: 12-bit at 1 Msps, 16-bit at 76.9 ksps
- 16-bit and 32-bit Timers/Counters
- 24-bit Low Energy Timer for waveform generation
- 32-bit Real Time Counter
- USART (UART/SPI/SmartCards/IrDA/I2S)
- EUART (UART/IrDA)
- I^2C peripheral interfaces
- PDM interface
- 12 Channel Peripheral Reflex System

For details on their electrical performance, consult the relevant portions of Section 4 in the SoC datasheet.

To learn which GPIO ports provide access to every peripheral, consult Analog Peripheral Connectivity and Digital Peripheral Connectivity.

4.16 Typical Performance Curves

Typical performance curves indicate typical characterized performance under the stated conditions.

4.16.1 Antenna Radiation and Efficiency

Typical BGM220P radiation patterns and efficiency for the on-board chip antenna under optimal operating conditions are plotted in the figures that follow. Antenna gain and radiation patterns have a strong dependence on the size and shape of the application PCB the module is mounted on, as well as on the proximity of any mechanical design to the antenna.

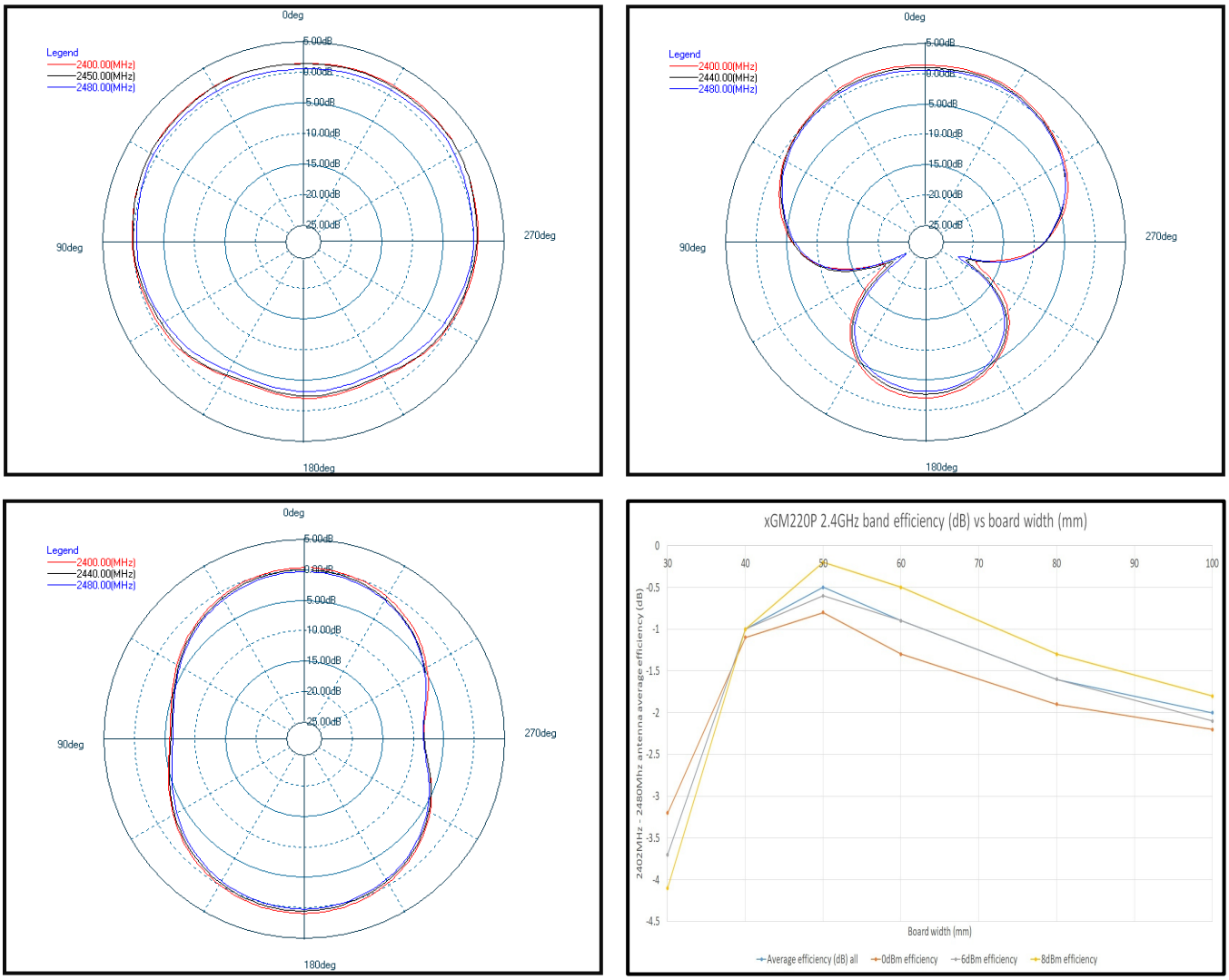

Figure 4.3. Typical 2D Antenna Radiation Patterns and Efficiency

Top Left: Phi 0°, Top Right: Phi 90°, Bottom Left: Theta 90°, Bottom Right: Radiation Efficiency vs Application Board GND Plane Width

5. Reference Diagrams

5.1 Network Co-Processor (NCP) Application with UART Host

The BGM220P can be controlled over the UART interface as a peripheral to an external host processor. Typical power supply, programming/debug interface, and host interface connections are shown in the figure below. For more details, refer to *AN958: Debugging and Programming Interfaces for Custom Designs*.

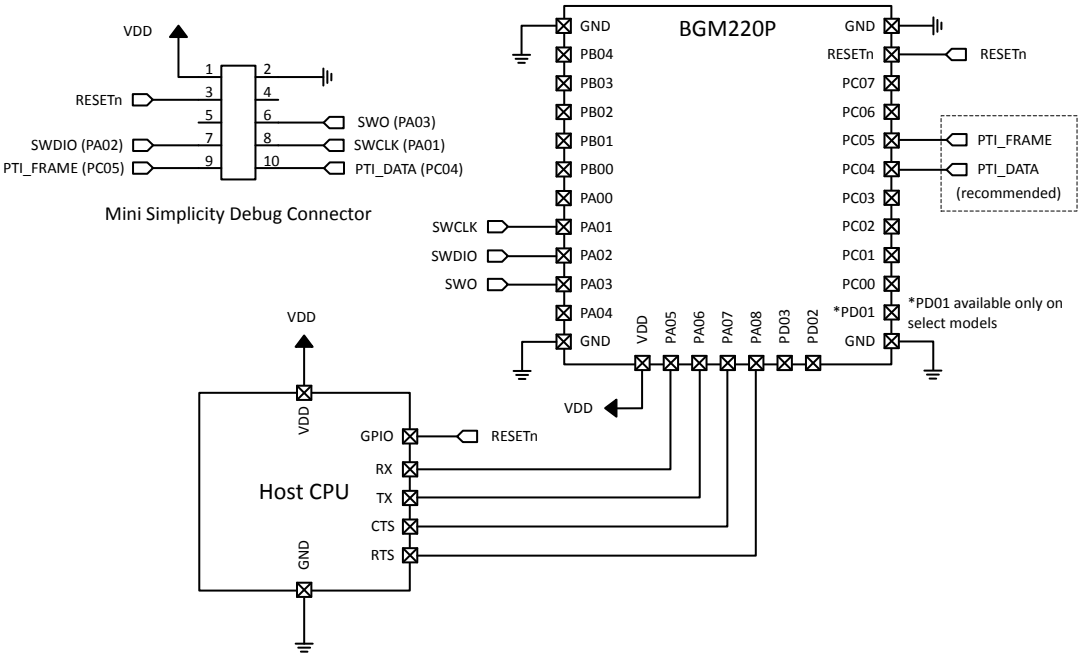

Figure 5.1. UART NCP Configuration

5.2 SoC Application

The BGM220P can be used in a stand-alone SoC configuration without an external host processor. Typical power supply and programming/debug interface connections are shown in the figure below. For more details, refer to *AN958: Debugging and Programming Interfaces for Custom Designs*.

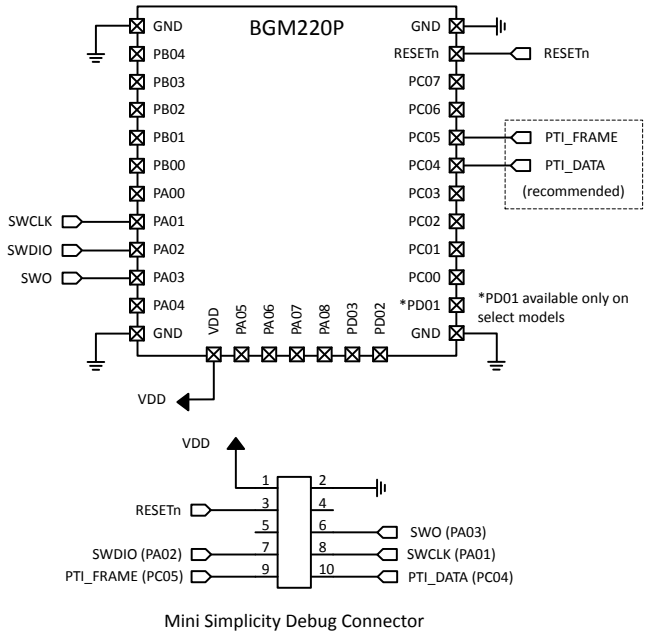

Figure 5.2. Stand-Alone SoC Configuration

6. Pin Definitions

6.1 31-Pin PCB Module With LF Crystal Device Pinout

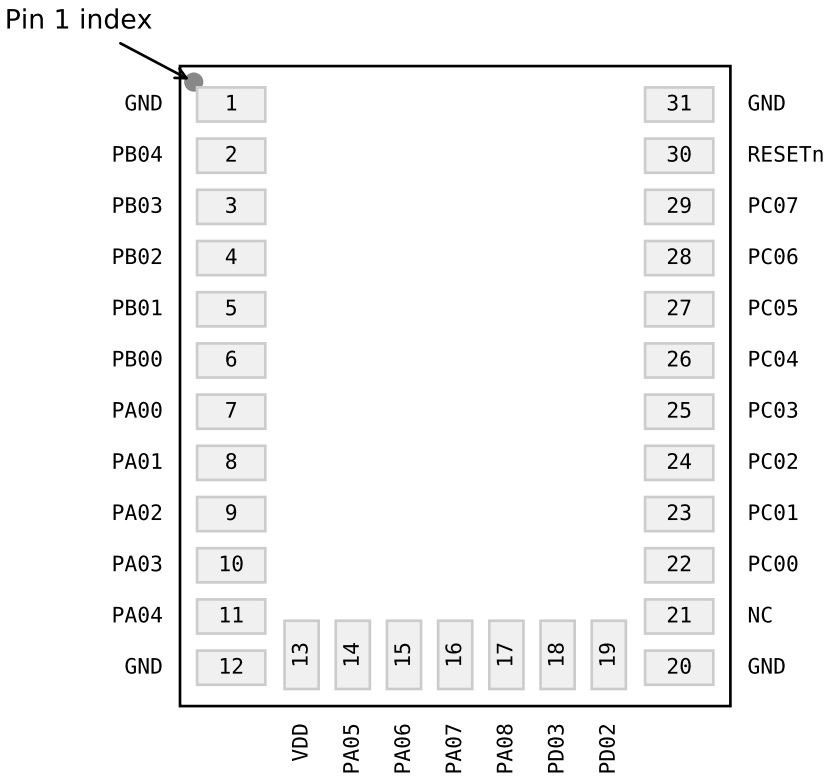

Figure 6.1. 31-Pin PCB Module With LF Crystal Device Pinout

The following table provides package pin connections and general descriptions of pin functionality. For detailed information on the supported features for each GPIO pin, see 6.3 Alternate Function Table, 6.4 Analog Peripheral Connectivity, and 6.5 Digital Peripheral Connectivity.

Table 6.1. 31-Pin PCB Module With LF Crystal Device Pinout

Pin Name	Pin(s)	Description	Pin Name	Pin(s)	Description
GND	1	Ground	PB04	2	GPIO
PB03	3	GPIO	PB02	4	GPIO
PB01	5	GPIO	PB00	6	GPIO
PA00	7	GPIO	PA01	8	GPIO
PA02	9	GPIO	PA03	10	GPIO

Pin Name	Pin(s)	Description	Pin Name	Pin(s)	Description
PA04	11	GPIO	GND	12	Ground
VDD	13	Power supply	PA05	14	GPIO
PA06	15	GPIO	PA07	16	GPIO
PA08	17	GPIO	PD03	18	GPIO
PD02	19	GPIO	GND	20	Ground
NC	21	Do not connect	PC00	22	GPIO
PC01	23	GPIO	PC02	24	GPIO
PC03	25	GPIO	PC04	26	GPIO
PC05	27	GPIO	PC06	28	GPIO
PC07	29	GPIO	RESETn	30	Reset Pin. The RESETn pin is pulled up to an internal DVDD supply. An external pull-up is not recommended. To apply an external reset source to this pin, it is required to only drive this pin low during reset, and let the internal pull-up ensure that reset is released. The RESETn pin can be left unconnected if no external reset switch or source is used.
GND	31	Ground			

6.2 31-Pin PCB Module With Precision LFRCO Device Pinout

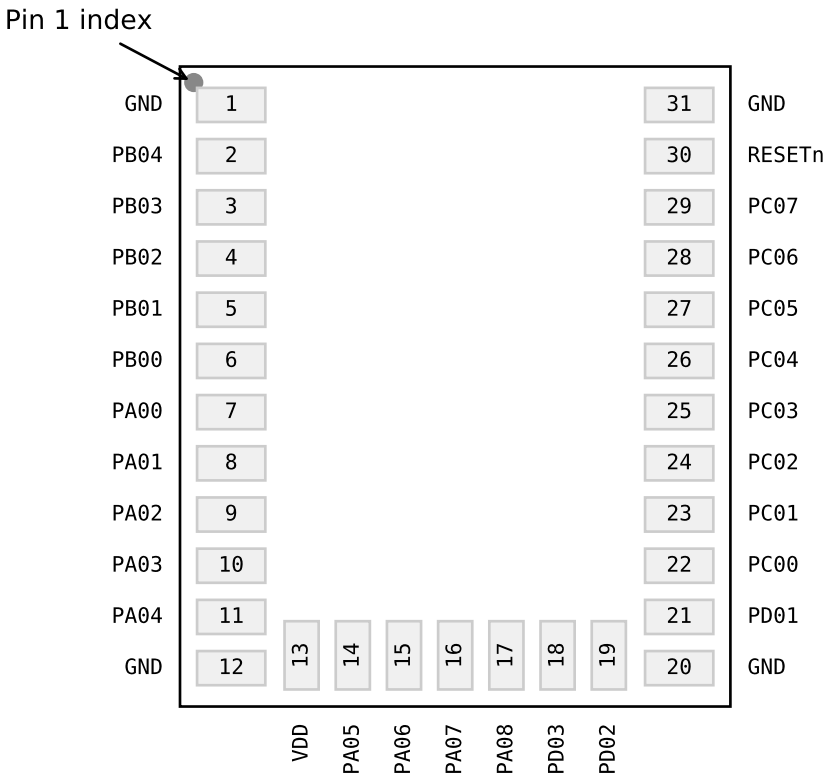

Figure 6.2. 31-Pin PCB Module With Precision LFRCO Device Pinout

The following table provides package pin connections and general descriptions of pin functionality. For detailed information on the supported features for each GPIO pin, see 6.3 Alternate Function Table, 6.4 Analog Peripheral Connectivity, and 6.5 Digital Peripheral Connectivity.

Table 6.2. 31-Pin PCB Module With Precision LFRCO Device Pinout

Pin Name	Pin(s)	Description	Pin Name	Pin(s)	Description
GND	1	Ground	PB04	2	GPIO
PB03	3	GPIO	PB02	4	GPIO
PB01	5	GPIO	PB00	6	GPIO
PA00	7	GPIO	PA01	8	GPIO
PA02	9	GPIO	PA03	10	GPIO
PA04	11	GPIO	GND	12	Ground
VDD	13	Power supply	PA05	14	GPIO

Pin Name	Pin(s)	Description	Pin Name	Pin(s)	Description
PA06	15	GPIO	PA07	16	GPIO
PA08	17	GPIO	PD03	18	GPIO
PD02	19	GPIO	GND	20	Ground
PD01	21	GPIO	PC00	22	GPIO
PC01	23	GPIO	PC02	24	GPIO
PC03	25	GPIO	PC04	26	GPIO
PC05	27	GPIO	PC06	28	GPIO
PC07	29	GPIO	RESETn	30	Reset Pin. The RESETn pin is pulled up to an internal DVDD supply. An external pull-up is not recommended. To apply an external reset source to this pin, it is required to only drive this pin low during reset, and let the internal pull-up ensure that reset is released. The RESETn pin can be left unconnected if no external reset switch or source is used.
GND	31	Ground			

6.3 Alternate Function Table

A wide selection of alternate functionality is available for multiplexing to various pins. The following table shows what functions are available on each device pin.

Table 6.3. GPIO Alternate Function Table

GPIO	Alternate Function				
PB03	GPIO.EM4WU4				
PB01	GPIO.EM4WU3				
PB00	IADC0.VREFN				
PA00	IADC0.VREFP				
PA01	GPIO.SWCLK				
PA02	GPIO.SWDIO				
PA03	GPIO.SWV	GPIO.TDO	GPIO.TRACEDA-TA0		
PA04	GPIO.TDI	GPIO.TRACECLK			
PA05	GPIO.EM4WU0				
PD02	GPIO.EM4WU9				
PC00	GPIO.EM4WU6	GPIO.THMSW_EN			
PC05	GPIO.EM4WU7				
PC07	GPIO.EM4WU8				

6.4 Analog Peripheral Connectivity

Many analog resources are routable and can be connected to numerous GPIO's. The table below indicates which peripherals are available on each GPIO port. When a differential connection is being used Positive inputs are restricted to the EVEN pins and Negative inputs are restricted to the ODD pins. When a single ended connection is being used positive input is avaliable on all pins. See the device Reference Manual for more details on the ABUS and analog peripherals.

Table 6.4. ABUS Routing Table

Peripheral	Signal	PA		PB		PC		PD	
		EVEN	ODD	EVEN	ODD	EVEN	ODD	EVEN	ODD
IADC0	ana_neg	Yes	Yes	Yes	Yes	Yes	Yes	Yes	Yes
	ana_pos	Yes	Yes	Yes	Yes	Yes	Yes	Yes	Yes

6.5 Digital Peripheral Connectivity

Many digital resources are routable and can be connected to numerous GPIO's. The table below indicates which peripherals are avaliable on each GPIO port.

Table 6.5. DBUS Routing Table

Peripheral.Resource	PORT			
	PA	PB	PC	PD
CMU.CLKIN0			Available	Available
CMU.CLKOUT0			Available	Available
CMU.CLKOUT1			Available	Available
CMU.CLKOUT2	Available	Available		
EUART0.CTS	Available	Available	Available	Available
EUART0.RTS	Available	Available	Available	Available
EUART0.RX	Available	Available	Available	Available
EUART0.TX	Available	Available	Available	Available
FRC.DCLK			Available	Available
FRC.DFRAME			Available	Available
FRC.DOUT			Available	Available
I2C0.SCL	Available	Available	Available	Available
I2C0.SDA	Available	Available	Available	Available
I2C1.SCL			Available	Available
I2C1.SDA			Available	Available
LETIMER0.OUT0	Available	Available		
LETIMER0.OUT1	Available	Available		
MODEM.ANT0	Available	Available	Available	Available
MODEM.ANT1	Available	Available	Available	Available
MODEM.ANT_ROLL_OVER			Available	Available
MODEM.ANT_RR0			Available	Available
MODEM.ANT_RR1			Available	Available
MODEM.ANT_RR2			Available	Available
MODEM.ANT_RR3			Available	Available
MODEM.ANT_RR4			Available	Available
MODEM.ANT_RR5			Available	Available
MODEM.ANT_SW_EN			Available	Available
MODEM.ANT_SW_US			Available	Available
MODEM.ANT_TRIG			Available	Available
MODEM.ANT_TRIG_STOP			Available	Available
MODEM.DCLK	Available	Available		

Peripheral.Resource	PORT			
	PA	PB	PC	PD
MODEM.DIN	Available	Available		
MODEM.DOUT	Available	Available		
PDM.CLK	Available	Available	Available	Available
PDM.DAT0	Available	Available	Available	Available
PDM.DAT1	Available	Available	Available	Available
PRS.ASYNCH0	Available	Available		
PRS.ASYNCH1	Available	Available		
PRS.ASYNCH10			Available	Available
PRS.ASYNCH11			Available	Available
PRS.ASYNCH2	Available	Available		
PRS.ASYNCH3	Available	Available		
PRS.ASYNCH4	Available	Available		
PRS.ASYNCH5	Available	Available		
PRS.ASYNCH6			Available	Available
PRS.ASYNCH7			Available	Available
PRS.ASYNCH8			Available	Available
PRS.ASYNCH9			Available	Available
PRS.SYNCH0	Available	Available	Available	Available
PRS.SYNCH1	Available	Available	Available	Available
PRS.SYNCH2	Available	Available	Available	Available
PRS.SYNCH3	Available	Available	Available	Available
TIMER0.CC0	Available	Available	Available	Available
TIMER0.CC1	Available	Available	Available	Available
TIMER0.CC2	Available	Available	Available	Available
TIMER0.CDTI0	Available	Available	Available	Available
TIMER0.CDTI1	Available	Available	Available	Available
TIMER0.CDTI2	Available	Available	Available	Available
TIMER1.CC0	Available	Available	Available	Available
TIMER1.CC1	Available	Available	Available	Available
TIMER1.CC2	Available	Available	Available	Available
TIMER1.CDTI0	Available	Available	Available	Available
TIMER1.CDTI1	Available	Available	Available	Available
TIMER1.CDTI2	Available	Available	Available	Available
TIMER2.CC0	Available	Available		
TIMER2.CC1	Available	Available		
TIMER2.CC2	Available	Available		

Peripheral.Resource	PORT			
	PA	PB	PC	PD
TIMER2.CDTI0	Available	Available		
TIMER2.CDTI1	Available	Available		
TIMER2.CDTI2	Available	Available		
TIMER3.CC0			Available	Available
TIMER3.CC1			Available	Available
TIMER3.CC2			Available	Available
TIMER3.CDTI0			Available	Available
TIMER3.CDTI1			Available	Available
TIMER3.CDTI2			Available	Available
TIMER4.CC0	Available	Available		
TIMER4.CC1	Available	Available		
TIMER4.CC2	Available	Available		
TIMER4.CDTI0	Available	Available		
TIMER4.CDTI1	Available	Available		
TIMER4.CDTI2	Available	Available		
USART0.CLK	Available	Available	Available	Available
USART0.CS	Available	Available	Available	Available
USART0.CTS	Available	Available	Available	Available
USART0.RTS	Available	Available	Available	Available
USART0.RX	Available	Available	Available	Available
USART0.TX	Available	Available	Available	Available
USART1.CLK	Available	Available		
USART1.CS	Available	Available		
USART1.CTS	Available	Available		
USART1.RTS	Available	Available		
USART1.RX	Available	Available		
USART1.TX	Available	Available		

7. Design Guidelines

7.1 Layout and Placement

For optimal performance of the BGM220P,

- Place the module aligned to the edge of the application PCB, as illustrated in the figures below.
- Leave the antenna clearance area void of any traces, components, or copper on all layers of the application PCB.
- Connect all ground pads directly to a solid ground plane.
- Place the ground vias as close to the ground pads as possible.
- Avoid plastic or any other dielectric material in contact with the antenna.

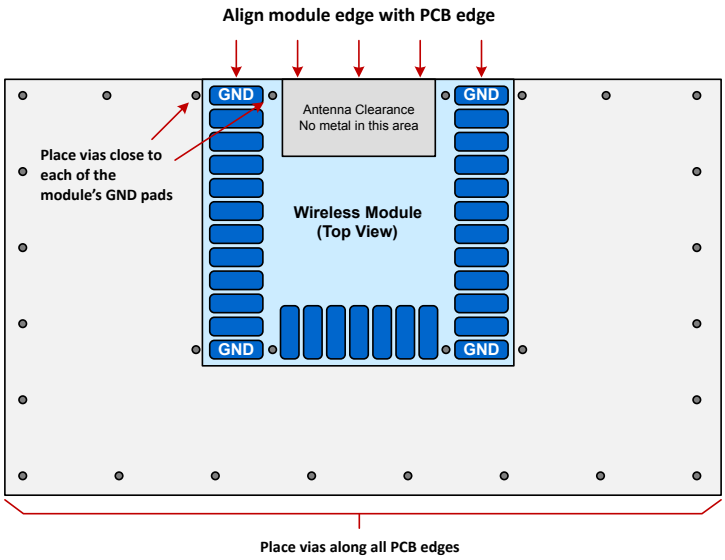

Figure 7.1. Recommended Layout for BGM220P

The figure below illustrates layout scenarios that will lead to severely degraded RF performance for the module.

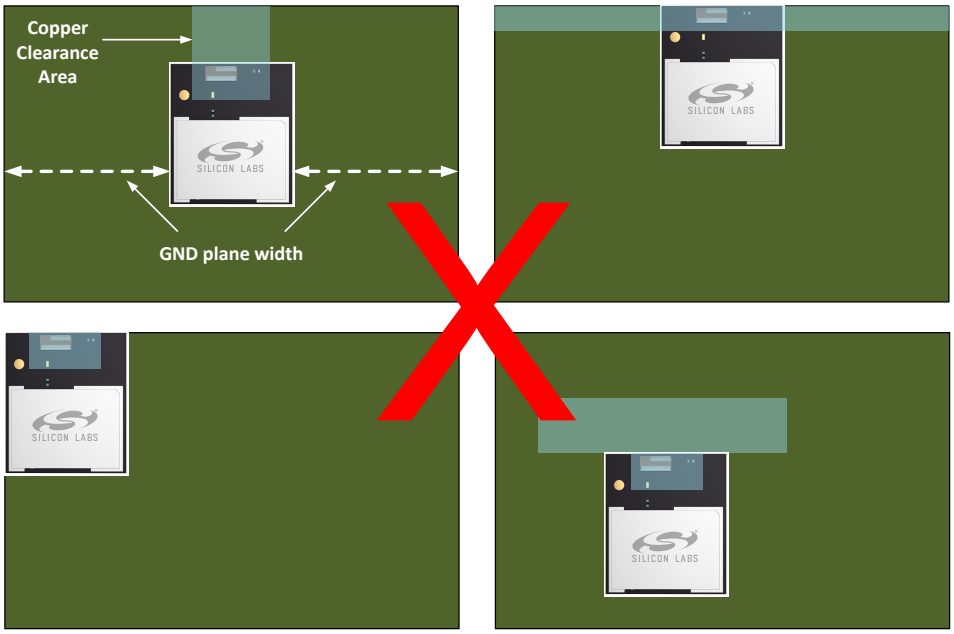

Figure 7.2. Non-Optimal Layout Examples

The width of the GND plane to the sides the module will impact the efficiency of the on-board chip antenna. To achieve optimal performance, a GND plane width of 50 mm is recommended. See 4.16.1 Antenna Radiation and Efficiency for reference.

7.2 Proximity to Other Materials

Avoid plastic or any other dielectric material in contact with the antenna. Conformal coating and other thin dielectric layers are acceptable directly on top of the antenna region, but this will also negatively impact antenna efficiency and reduce range.

Any metallic objects in close proximity to the antenna will prevent the antenna from radiating freely. The minimum recommended distance of metallic and/or conductive objects is 10 mm in any direction from the antenna except in the directions of the application PCB ground planes.

7.3 Proximity to Human Body

Placing the module in contact with or very close to the human body will negatively impact antenna efficiency and reduce range.

8. Package Specifications

8.1 Dimensions

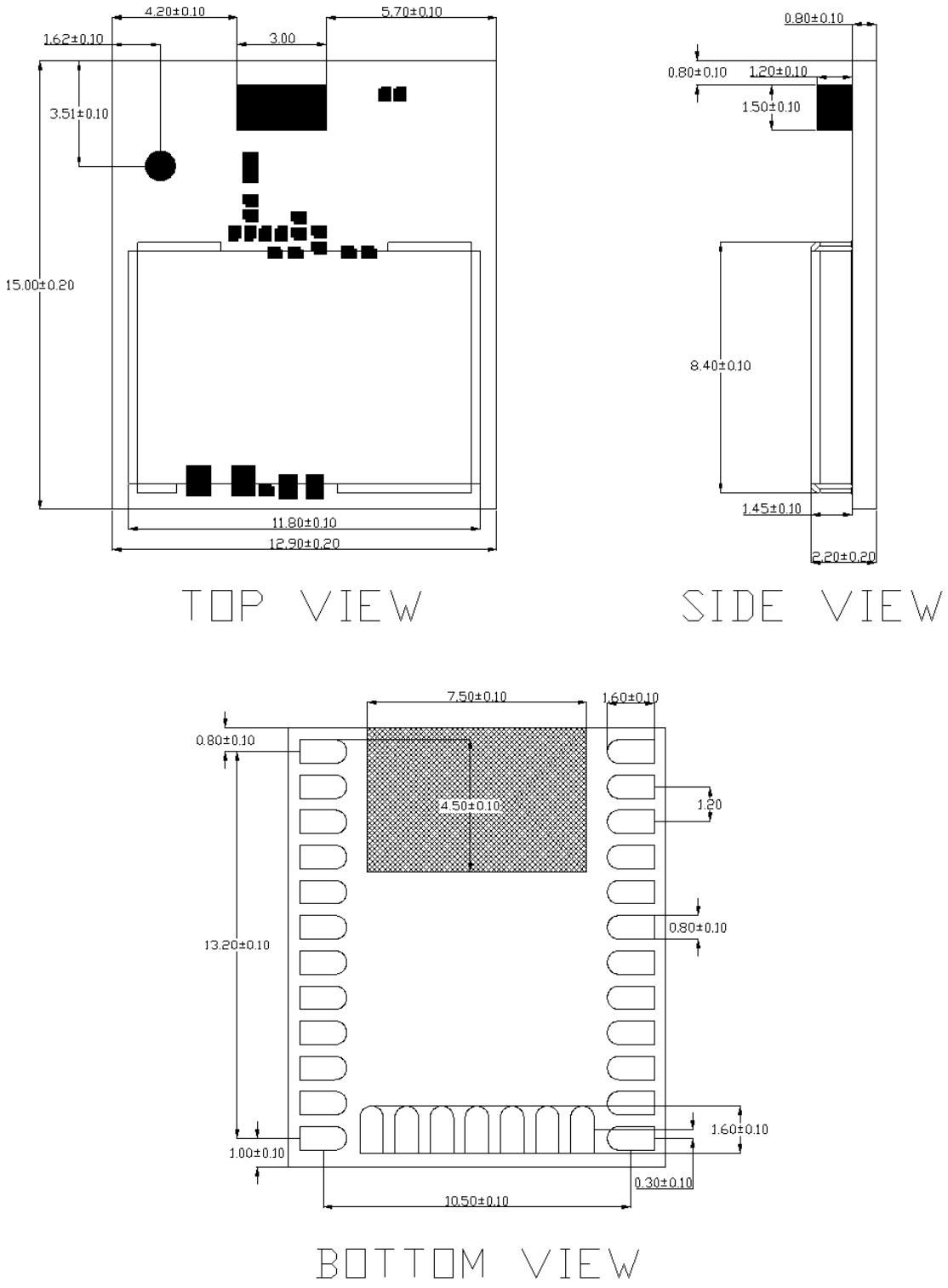

Figure 8.1. Module Dimensions

Note: All dimensions in millimeters (mm).

8.2 PCB Land Pattern

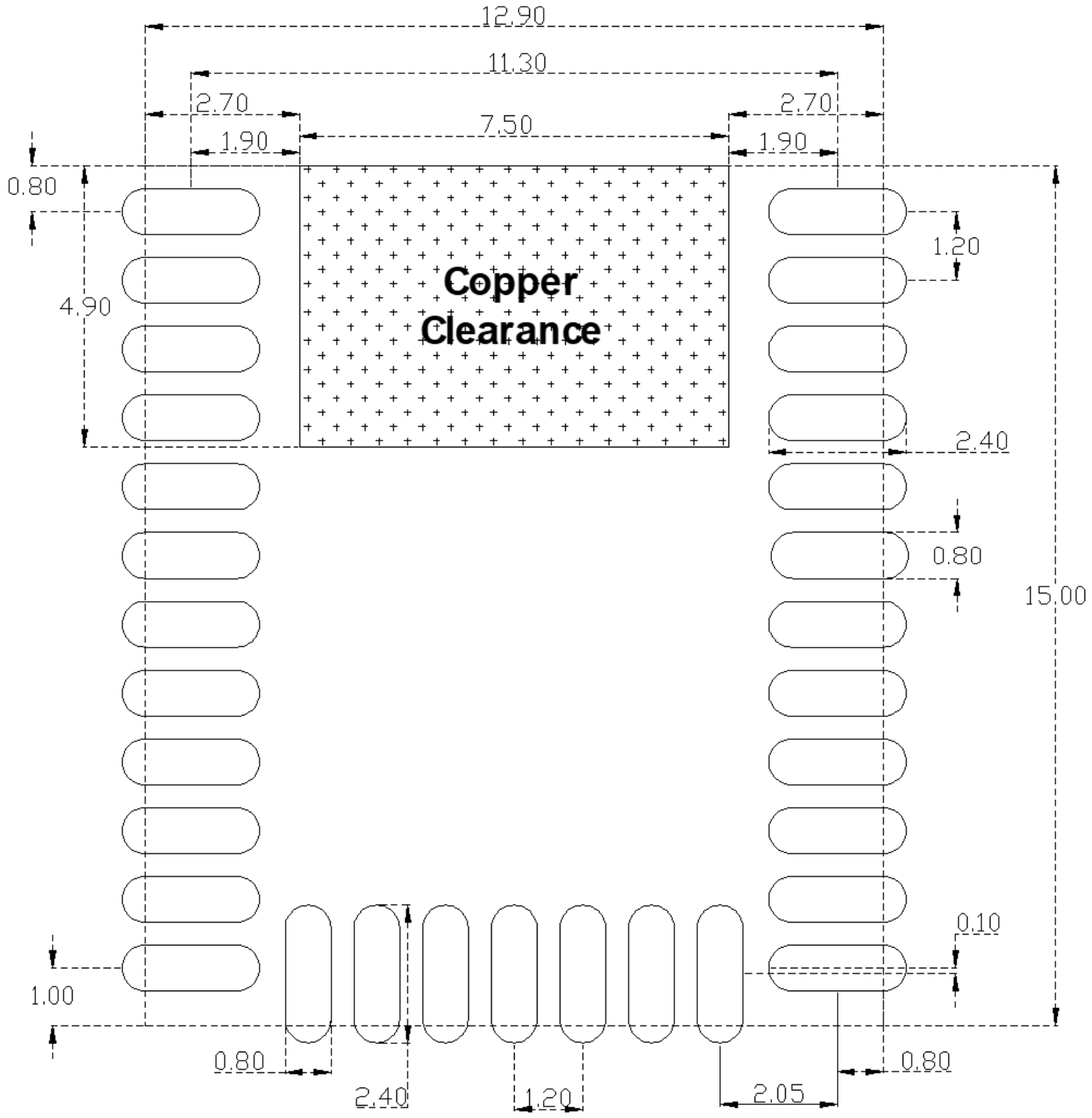

Figure 8.2. Recommended Land Pattern

Note: All dimensions in millimeters (mm).

8.3 Package Marking

The figure below shows the module markings engraved on the RF shield.

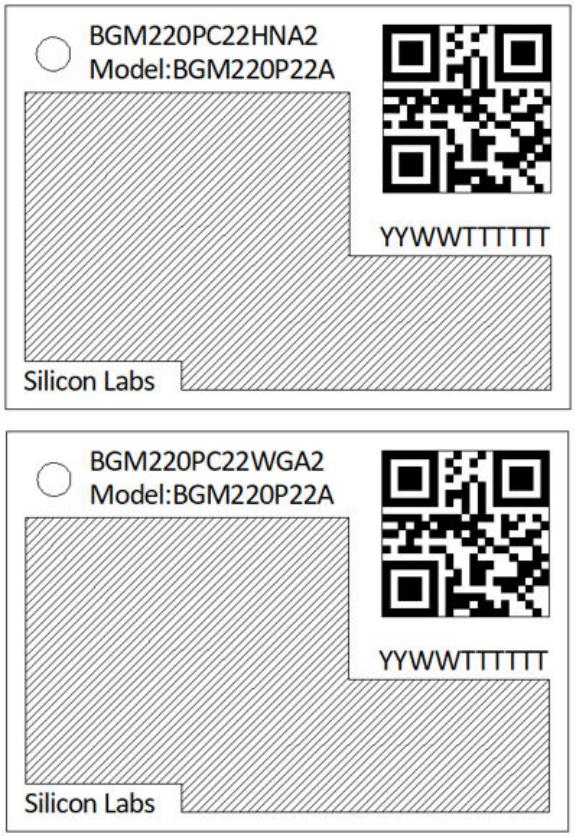

Figure 8.3. BGM220P Top Marking

Mark Description

The package marking consists of:

- BGM220Pxxxxxxx - Part number designation
- Model: BGM220Pxxx - Model number designation
- QR Code: YYWWMMABCDE
  - YY – Last two digits of the assembly year.
  - WW – Two-digit workweek when the device was assembled.
  - MMABCDE – Silicon Labs unit code
- YYWWTTTTTT
  - YY – Last two digits of the assembly year.
  - WW – Two-digit workweek when the device was assembled.
  - TTTTTT – Manufacturing trace code. The first letter is the device revision.
- Certification marks such as the CE logo, FCC and IC IDs, etc will be engraved on the grayed out area, according to regulatory body requirements.

9. Soldering Recommendations

It is recommended that final PCB assembly of the BGM220P follows the industry standard as identified by the Institute for Printed Circuits (IPC). This product is assembled in compliance with the J-STD-001 requirements and the guidelines of IPC-AJ-820. Surface mounting of this product by the end user is recommended to follow IPC-A-610 to meet or exceed class 2 requirements.

CLASS 1 General Electronic Products

Includes products suitable for applications where the major requirement is function of the completed assembly.

CLASS 2 Dedicated Service Electronic Products

Includes products where continued performance and extended life is required, and for which uninterrupted service is desired but not critical. Typically the end-use environment would not cause failures.

CLASS 3 High Performance/Harsh Environment Electronic Products

Includes products where continued high performance or performance-on-demand is critical, equipment downtime cannot be tolerated, end-use environment may be uncommonly harsh, and the equipment must function when required, such as life support or other critical systems.

Note: General SMT application notes are provided in the AN1223 document.

10. Tape and Reel

BGM220P modules are delivered to the customer in cut tape (100 pcs) or reel (1000 pcs) packaging with the dimensions below. All dimensions are given in mm unless otherwise indicated.

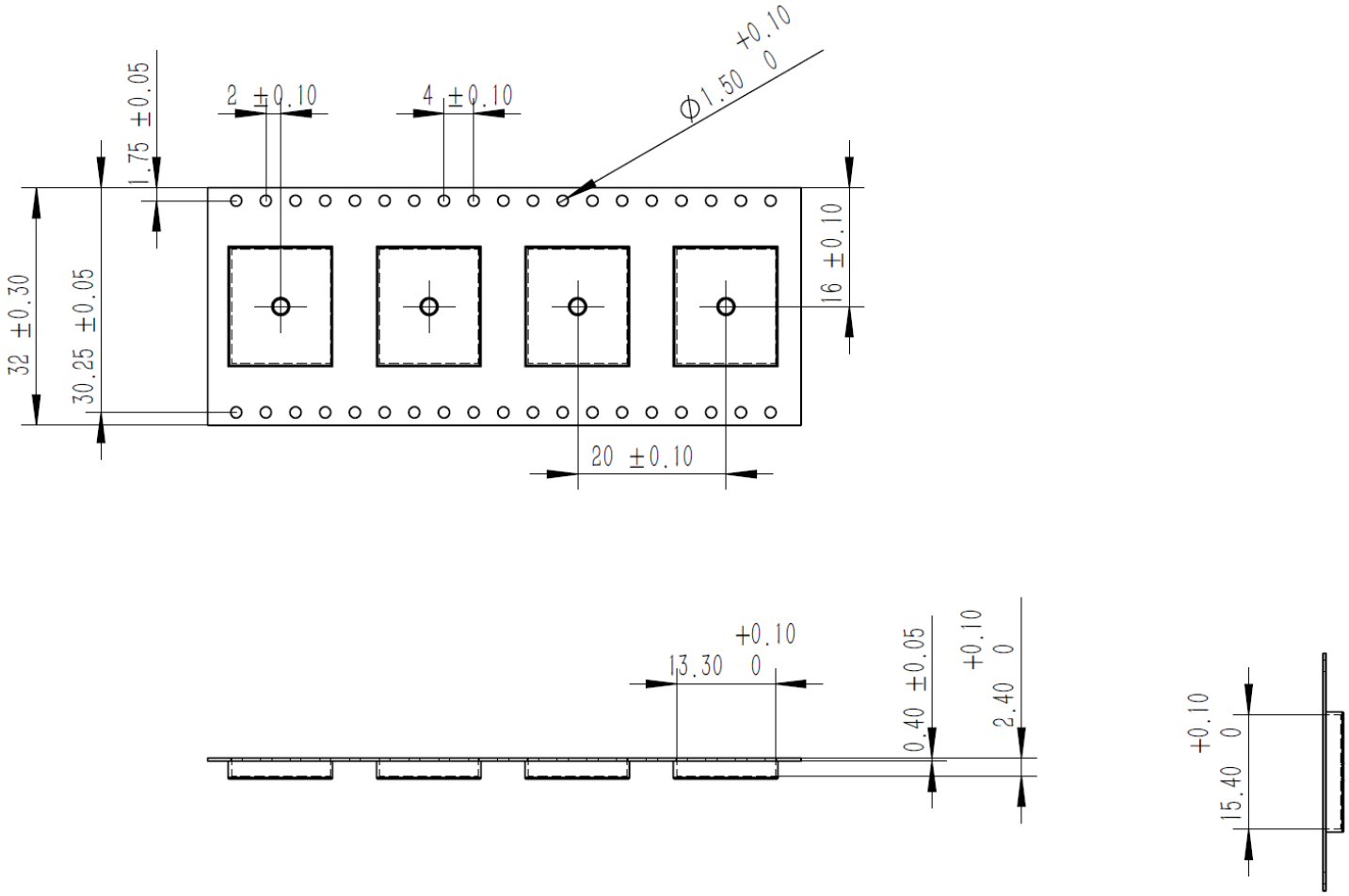

Figure 10.1. Carrier Tape Dimensions

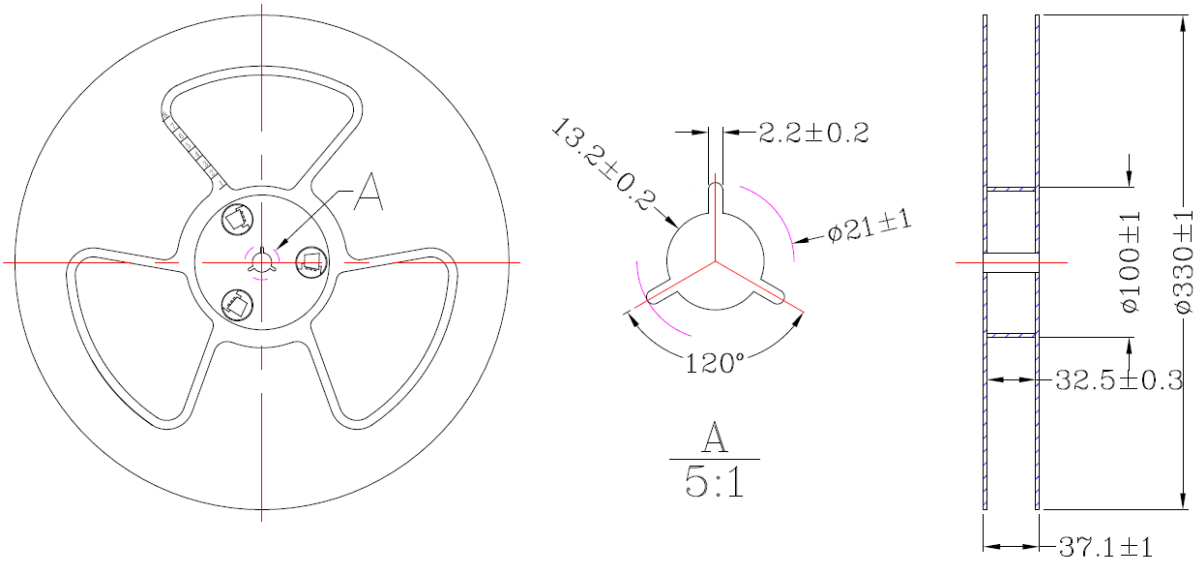

Figure 10.2. Reel Dimensions

11. Certifications

This section details the regulatory certification status of BGM220P modules in various regions. BGM220P modules are also referred to by their model name BGM220P22A.

The address for the module manufacturer and certification applicant is:

SILICON LABORATORIES FINLAND OY
Alberga Business Park, Bertel Jungin aukio 3,
02600 Espoo, Finland

11.1 Qualified Antennas

BGM220P modules have been tested and certified with the on-board chip antenna. Performance characteristics for the chip antenna are presented in Table 3.1 Antenna Efficiency and Peak Gain on page 7 and 4.16.1 Antenna Radiation and Efficiency.

11.2 EU and UK - CE and UKCA

The BGM220P modules have been tested against the relevant harmonized/designated standards and are in conformity with the essential requirements and other relevant requirements of the Radio Equipment Directive (RED) (2014/53/EU) and of the Radio Equipment Regulations (RER) (S.I. 2017/1206).

Please notice that every end-product integrating a BGM220P module will need to perform the radio EMC tests on the whole assembly, according to the ETSI 301 489-x relevant standards.

Furthermore, it is ultimately the responsibility of the manufacturer to ensure the compliance of the end-product as a whole. The specific product assembly is likely to have an impact to RF radiated characteristics, when compared to the bare module. Hence, manufacturers should carefully consider RF radiated testing with the final product assembly, especially taking into account the gain of the external antenna if any, and the possible deviations in the PSD, EIRP and spurious emissions measurements, as defined in the ETSI 300 328 standard.

The modules are entitled to carry the CE and UKCA Marks, and a formal Declaration of Conformity (DoC) is available at the product web page which is reachable starting from https://www.silabs.com/.

11.3 USA - FCC

This device complies with Part 15 of the FCC Rules when operating with the embedded antenna. Operation is subject to the following two conditions:

1. This device may not cause harmful interference, and
2. This device must accept any interference received, including interference that may cause undesirable operation.

Any changes or modifications not expressly approved by Silicon Labs could void the user's authority to operate the equipment.

FCC RF Radiation Exposure Statement

This equipment complies with FCC radiation exposure limits set forth for an uncontrolled environment. End users must follow the specific operating instructions for satisfying RF exposure compliance.

This transmitter meets the Mobile requirements at a distance of 20 cm and above from the human body, in accordance to the limit(s) exposed in the RF Exposure Analysis.

This transmitter also meets the Portable requirements at distances equal or above those listed for convenience in Table 11.1 Minimum Separation Distances for SAR Evaluation Exemption on page 45.

This transmitter must not be co-located or operating in conjunction with any other antenna or transmitter except in accordance with FCC multi-transmitter product procedures.

OEM Responsibilities to comply with FCC Regulations

This module has been tested for compliance to FCC Part 15.

OEM integrators are responsible for testing their end-product for any additional compliance requirements needed with this module installed (for example, digital device emissions, PC peripheral requirements, etc.). Additionally, investigative measurements and spot checking are strongly recommended to verify that the full system compliance is maintained when the module is integrated, in accordance to the "Host Product Testing Guidance" in FCC's KDB 996369 D04 Module Integration Guide V01.

- **General Considerations**

  This transmitter module is tested as a subsystem and its certification does not cover the FCC Part 15 Subpart B (unintentional radiator) rule requirement. However, such requirement is typically applicable to the final host. Thus, the final host will still need to be reassessed for compliance to this portion of rule requirements, if applicable.
- **Manual Information to the End User**

  The OEM integrator has to be aware not to provide information to the end-user regarding how to install or remove this RF module in the user's manual of the end product which integrates this module.

  The end user manual shall include all required regulatory information/warnings as shown in this manual.
- **OEM/Host Manufacturer Responsibilities**

  OEM / Host manufacturers are ultimately responsible for the compliance of the Host and Module. The final product must be reassessed against all the essential requirements of the FCC rule such as FCC Part 15 Subpart B before it can be placed on the US market. This includes reassessing the transmitter module for compliance with the Radio and EMF essential requirements of the FCC rules. This module must not be incorporated into any other device or system without retesting for compliance as multi-radio and combined equipment.

Separation

- To meet the SAR exemption for portable conditions, the minimum separation distance indicated in Table 11.1 Minimum Separation Distances for SAR Evaluation Exemption on page 45 must be maintained between the human body and the radiator (antenna) at all times.
- This transmitter module is tested in a standalone mobile RF exposure condition, and in case of any co-located radio transmitter being allowed to transmit simultaneously, or in case of portable use at closer distances from the human body than those allowing the exceptions rules to be applied, a separate additional SAR evaluation will be required, ultimately leading to a Class II Permissive Change, or more rarely to a new grant.
- **Important Note:** In the event that these conditions cannot be met, then for the FCC authorization to remain valid the final product will have to undergo additional testing to evaluate the RF exposure, and a permissive change will have to be applied. The evaluation (SAR) is in the responsibility of the end-product's manufacturer, as well as the permissive change that can be carried out with the help of the customer's own Telecommunication Certification Body typically acting as the grant holder's agent.

End Product Labeling

BGM220P modules are labeled with their own FCC ID. If the FCC ID is not visible when the module is installed inside another device, then the outside of the device into which the module is installed must also display a label referring to the enclosed module. In that case, the final end product must be labeled in a visible area with the following:

"Contains Transmitter Module FCC ID: QOQ-GM220P"

Or

"Contains FCC ID: QOQ-GM220P"

The OEM integrator has to be aware not to provide information to the end user regarding how to install or remove this RF module or change RF related parameters in the user manual of the end product.

As long as all conditions above are met, further transmitter test will not be required. However, the OEM integrator is still responsible for testing their end-product for any additional compliance requirements required with this module installed.

Class B Device Notice

Note: This equipment has been tested and found to comply with the limits for a Class B digital device, pursuant to part 15 of the FCC Rules. These limits are designed to provide reasonable protection against harmful interference in a residential installation. This equipment generates, uses, and can radiate radio frequency energy and, if not installed and used in accordance with the instructions, may cause harmful interference to radio communications. However, there is no guarantee that interference will not occur in a particular installation. If this equipment does cause harmful interference to radio or television reception, which can be determined by turning the equipment off and on, the user is encouraged to try to correct the interference by one or more of the following measures:

- Reorient or relocate the receiving antenna.
- Increase the separation between the equipment and receiver.
- Connect the equipment into an outlet on a circuit different from that to which the receiver is connected.
- Consult the dealer or an experienced radio / TV technician for help.

11.4 ISED Canada

ISED

This radio transmitter (IC: 5123A-GM220P) has been approved by *Innovation, Science and Economic Development Canada (ISED Canada, formerly Industry Canada*) to operate with the embedded antenna and with the antenna type(s) listed in 11.1 Qualified Antennas, with the maximum permissible gain indicated. Antenna types not included in this list, having a gain greater than the maximum gain listed, are strictly prohibited for use with this device.

This device complies with ISED's license-exempt RSS standards. Operation is subject to the following two conditions:

1. This device may not cause interference; and
2. This device must accept any interference, including interference that may cause undesired operation of the device

RF Exposure Statement

Exception from routine SAR evaluation limits are given in RSS-102 Issue 5.

The module meets the given requirements when the minimum separation distance to human body is as indicated in Table 11.1 Minimum Separation Distances for SAR Evaluation Exemption on page 45.

RF exposure or SAR evaluation is not required when the separation distances from the human body are equal or above those stated in Table 11.1 Minimum Separation Distances for SAR Evaluation Exemption on page 45. If the separation distance is less than stated in Table 11.1 Minimum Separation Distances for SAR Evaluation Exemption on page 45. the OEM integrator is responsible for evaluating the SAR.

OEM Responsibilities to comply with IC Regulations

The module has been certified for integration into products only by OEM integrators under the following conditions:

- The antenna must be installed such that a minimum separation distance as stated above is maintained between the radiator (antenna) and all persons at all times.
- The transmitter module must not be co-located or operating in conjunction with any other antenna or transmitter.

Important Note: In the event that these conditions cannot be met, the final product will have to undergo additional testing to evaluate the RF exposure in order for the ISED authorization to remain valid, and a permissive change will have to be applied with the help of the customer's own Telecommunication Certification Body typically acting as the certificate holder's agent.

End Product Labeling

The BGM220P module is labeled with its own IC ID. If the IC ID is not visible when the module is installed inside another device, then the outside of the device into which the module is installed must also display a label referring to the enclosed module. In that case, the final end product must be labeled in a visible area with the following:

"**Contains Transmitter Module IC: 5123A-GM220P** "

or

"**Contains IC: 5123A-GM220P"**

The OEM integrator has to be aware not to provide information to the end user regarding how to install or remove this RF module or change RF related parameters in the user manual of the end product.

As long as all the conditions above are met, further transmitter testing will not be required. However, the OEM integrator is still responsible for testing their end-product for any additional compliance requirements required with this module installed (for example, digital device emissions, PC peripheral requirements, etc.).

CAN ICES-003 (B)

This Class B digital apparatus complies with Canadian ICES-003.

ISEDC (Français)

Le présent émetteur radio (IC: 5123A-GM220P) a été approuvé par Innovation, Sciences et Développement Économique Canada (ISED Canada, anciennement Industrie Canada) pour fonctionner avec l'antenne intégrée et le ou les types d'antenne énumérés à la section 11.1 Qualified Antennas, avec le gain maximal admissible indiqué. Les types d'antenne non inclus dans cette liste, ayant un gain-supérieur au gain maximal indiqué, sont strictement interdits d'utilisation avec cet appareil. .

Ce composant est conforme aux normes RSS, exonérées de licence d'ISED. Son mode de fonctionnement est soumis aux deux conditions suivantes:

1. Ce composant ne doit pas générer d'interférences.
2. Ce composant doit pouvoir être soumis à tout type de perturbation y compris celle pouvant nuire à son bon fonctionnement.

Déclaration d'exposition RF

L'exception tirée des limites courantes d'évaluation SAR est donnée dans le document RSS-102 Issue 5.

Les modèles BGM220P respectent les exigences d'exemption prévues lorsque la distance de séparation minimale entre le(s) antenne(s) et le corps humain est conforme aux valeurs indiquées dans le Table 11.1 Minimum Separation Distances for SAR Evaluation Exemption on page 45.

La déclaration d'exposition RF ou l'évaluation DAS n'est pas nécessaire lorsque la distance de séparation est identique ou supérieure à celle indiquée ci-dessus. Si la distance de séparation est inférieure à celle mentionnées plus haut, il incombe à l'intégrateur OEM de procédé à une évaluation DAS.

La déclaration d'exposition RF ou l'évaluation SAR n'est pas nécessaire lorsque la distance de séparation est identique ou supérieure à celle indiquée ci-dessus. Si la distance de séparation est inférieure à celle mentionnées plus haut, il incombe à l'intégrateur OEM de procédé à une évaluation SAR.

Responsabilités des OEM pour une mise en conformité avec le Règlement du Circuit Intégré

Le module a été approuvé pour l'intégration dans des produits finaux exclusivement réalisés par des OEM sous les conditions suivantes:

- L'antenne doit être installée de sorte qu'une distance de séparation minimale indiquée ci-dessus soit maintenue entre le radiateur (antenne) et toutes les personnes avoisinante, ce à tout moment.
- Le module émetteur ne doit pas être localisé ou fonctionner avec une autre antenne ou un autre transmetteur que celle indiquée plus haut.

Tant que les deux conditions ci-dessus sont respectées, il n'est pas nécessaire de tester ce transmetteur de façon plus poussée. Cependant, il incombe à l'intégrateur OEM de s'assurer de la bonne conformité du produit fini avec les autres normes auxquelles il pourrait être soumis de fait de l'utilisation de ce module (par exemple, les émissions des périphériques numériques, les exigences de périphériques PC, etc.).

Remarque Importante: Dans le cas où ces conditions ne peuvent être satisfaites (pour certaines configurations ou co-implantation avec un autre émetteur), l'autorisation ISED n'est plus considérée comme valide et le numéro d'identification ID IC ne peut pas être apposé sur le produit final. Dans ces circonstances, l'intégrateur OEM sera responsable de la réévaluation du produit final (y compris le transmetteur) et de l'obtention d'une autorisation ISED distincte.

Étiquetage des produits finis

Les modules BGM220P sont étiquetés avec leur propre ID IC. Si l'ID IC n'est pas visible lorsque le module est intégré au sein d'un autre produit, cet autre produit dans lequel le module est installé devra porter une étiquette faisant apparaitre les référence du module intégré. Dans un tel cas, sur le produit final doit se trouver une étiquette aisément lisible sur laquelle figurent les informations suivantes:

"**Contient le module transmetteur: 5123A-GM220P** "

or

"**Contient le circuit: 5123A-GM220P"**

L'intégrateur OEM doit être conscient qu'il ne doit pas fournir, dans le manuel d'utilisation, d'informations relatives à la façon d'installer ou de d'enlever ce module RF ainsi que sur la procédure à suivre pour modifier les paramètres liés à la radio.

CAN ICES-003 (B)

Cet appareil numérique de classe B est conforme à la norme canadienne ICES-003.

11.5 Proximity to Human Body

When using the module in an application where the radio is located close to the human body, the human RF exposure must be evaluated. FCC, ISED, and CE all have different standards for evaluating the RF exposure, and because of this, each standard requires a different minimum separation distance between the module and human body. Certification of BGM220P allows for the minimum separation distances detailed in the table below in portable use cases (less than 20 cm from human body). The module is approved for the mobile use case (more than 20 cm) without any need for RF exposure evaluation.

Table 11.1. Minimum Separation Distances for SAR Evaluation Exemption

Certification	BGM220P22A
FCC	Bluetooth LE: 0 mm
ISED	Bluetooth LE: 14 mm
CE	The RF exposure must always be evaluated using the end-product when transmitting with power levels higher than 20 mW (13 dBm).

For FCC and ISED, using the module in end-products where the separation distance from the human body is smaller than that listed above is allowed but requires evaluation of the RF exposure in the final assembly and applying for a *Class 2 Permissive Change* or *Change of ID* to be applied to the existing FCC/ISED approvals of the module. For CE, RF exposure must be evaluated using the end-product in all cases when transmitting at more than the power level indicated in the table.

Note: Placing the module in touch or very close to the human body will have a negative impact on the efficiency of the antenna thus a reduced range is to be expected.

11.6 Japan - MIC

The BGM220P22A are certified in Japan with certification number 020-200011.

It is the end-product manufacturer's responsibility to ensure that the module is configured to meet the limits documented in the formal certification test report available at https://www.silabs.com/. If needed, refer to the API reference manual(s) to learn how to configure the maximum RF TX power for the normal operations.

Since September 1, 2014 it is allowed (and highly recommended) that a manufacturer who integrates a radio module in their host equipment places the certification mark and certification number on the outside of the host equipment. This combination of mark and number, and their relative placement, is depicted in figure 11.1, and depending on the size of the module it might also appear on the top shield markings of the radio module. The certification mark and certification number must be placed close to the text in the Japanese language which is provided below. This change in the Radio Law has been made in order to enable users of the combination of host and radio module to verify if they are actually using a radio device which is approved for use in Japan

Certification Text to be Placed on the Outside Surface of the Host Equipment:

当該機器には電波法に基づく、技術基準適合証明等を受けた特定無線設備を装着している。

Translation of the text:

“This equipment contains specified radio equipment that has been certified to the Technical Regulation Conformity Certification under the Radio Law.”

The "Giteki" marking shown in the figures below must be affixed to an easily noticeable section of the specified radio equipment.

Note that additional information may be required if the device is also subject to a telecom approval.

Figure 11.1. GITEKI Mark and ID

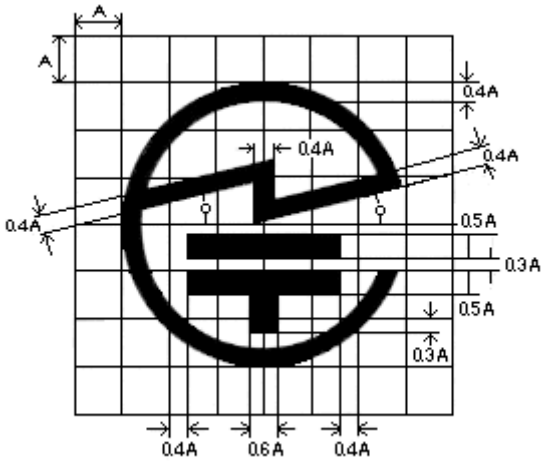

Figure 11.2. GITEKI Mark

11.7 South Korea - KC

The BGM220P22A modules have a RF certification for import and use in South-Korea.

Certification number is: R-R-BGT-GM220P

When integrating the RF-certified module, an end-product is exempted from doing the RF emission testing, as long as the recommended design guidance is followed, and the approved antennas are used.

EMC testing, and any other relevant test, might still be required for full compliance.

11.8 Bluetooth Qualification

The BGM220P modules are launched with a pre-qualified Bluetooth Low Energy RF-PHY Tested Component based on Core Specification 5.2 having Declaration ID of D044525 and QDID of 146980, and having a listing date of 2020-03-16.

The BGM220P modules additionally have a pre-qualified Bluetooth Low Energy RF-PHY Tested Component based on Core Specification 5.3 having Declaration ID of D056804 and QDID of 178496, and having a listing date of 2021-11-12.

Notice that the validity set by the SIG for Tested Components is currently of 3 years: during the product lifetime, Silicon Labs will re-assess or re-qualify an RF-PHY Component as it expires, whenever applicable. In case of a re-qualification an RF-PHY Tesed Component will come with a new DID and a new QDID, and these will be then reffered to in end-product listings. Newer DIDs and QDIDs can be discovered by using the search engine in the SIG's Launch Studio, or by asking Silicon Labs via the technical support platform.

A module’s RF-PHY Tested Component should be combined with the latest Wireless Gecko Link Layer and Host pre-qualified Components by Silicon Labs, when in the process of qualifying an end-product embedding the BGM220P via the SIG’s Launch Studio.

12. Revision History

Revision 1.1

October, 2022

- Updated Regulatory Certifications in 1. Feature List to include UKCA.
- Updated direction finding language in 2. Ordering Information.
- Added kits available for evaluation in 2. Ordering Information.
- Added RESETn low time to ensure pin reset (T_RESET) specification to Table 4.14 GPIO Pins on page 20.
- Added note in 8.1 Dimensions and 8.2 PCB Land Pattern.
- Updated 8.3 Package Marking.
- Updated 11.2 EU and UK - CE and UKCA.
- Updated wording for 11.8 Bluetooth Qualification.

Revision 1.0

June, 2020

- Figure 3.1 BGM220P Block Diagram on page 6: Clarified that LF XTAL only included in BGM220PC22HNAx device.
- Updated 4.2.1 DC-DC Operating Limits to relax lifetime safe operating region.
- Updated 5. Reference Diagrams to mark PTI interface as recommended in figures.
- Updated 4. Electrical Characteristics with latest characterization results and limits.
- Updated 11. Certifications with final certification details.

Revision 0.5

March, 2020

- Updated 4. Electrical Characteristics with latest characterization results.
- In the front page block diagram, updated the lowest energy mode for LETIMER.
- Update part numbers in 2. Ordering Information to reflect new ordering code scheme.
- In 2. Ordering Information, added note about referencing by family, model, or ordering code.
- Added supply voltage, crystal frequencies and RF frequencies to Figure 3.1 BGM220P Block Diagram on page 6.
- Added certification sections: , 11.6 Japan - MIC and 11.7 South Korea - KC.
- Updated 8.3 Package Marking with latest revision.
- Added section 10. Tape and Reel.
- Added section 5. Reference Diagrams.

Revision 0.1

August, 2019

Initial release.

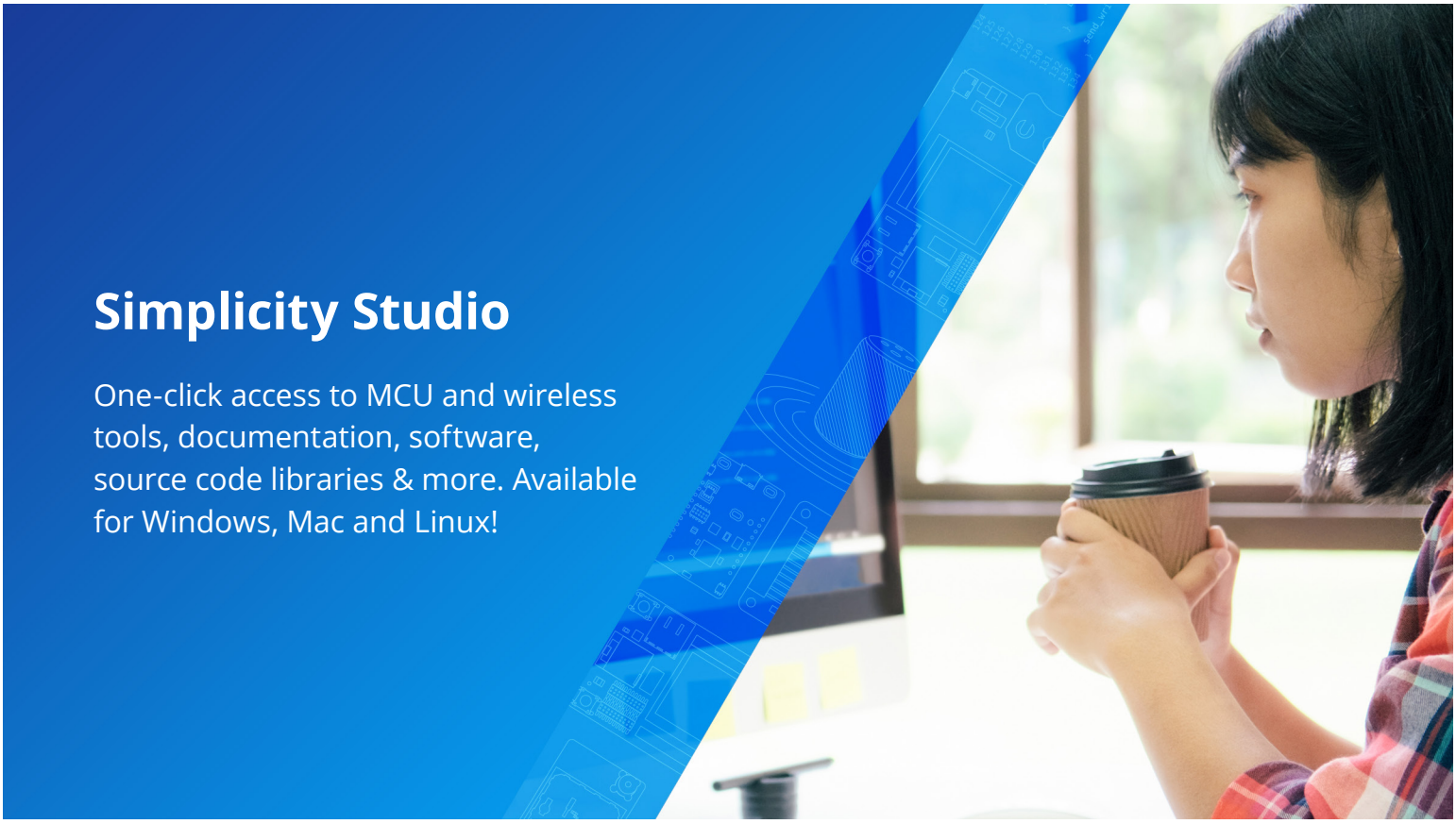

IoT Portfolio
www.silabs.com/IoT

SW/HW
www.silabs.com/simplicity

Quality
www.silabs.com/quality

Support & Community
www.silabs.com/community

Disclaimer
Silicon Labs intends to provide customers with the latest, accurate, and in-depth documentation of all peripherals and modules available for system and software implementers using or intending to use the Silicon Labs products. Characterization data, available modules and peripherals, memory sizes and memory addresses refer to each specific device, and "Typical" parameters provided can and do vary in different applications. Application examples described herein are for illustrative purposes only. Silicon Labs reserves the right to make changes without further notice to the product information, specifications, and descriptions herein, and does not give warranties as to the accuracy or completeness of the included information. Without prior notification, Silicon Labs may update product firmware during the manufacturing process for security or reliability reasons. Such changes will not alter the specifications or the performance of the product. Silicon Labs shall have no liability for the consequences of use of the information supplied in this document. This document does not imply or expressly grant any license to design or fabricate any integrated circuits. The products are not designed or authorized to be used within any FDA Class III devices, applications for which FDA premarket approval is required or Life Support Systems without the specific written consent of Silicon Labs. A "Life Support System" is any product or system intended to support or sustain life and/or health, which, if it fails, can be reasonably expected to result in significant personal injury or death. Silicon Labs products are not designed or authorized for military applications. Silicon Labs products shall under no circumstances be used in weapons of mass destruction including (but not limited to) nuclear, biological or chemical weapons, or missiles capable of delivering such weapons. Silicon Labs disclaims all express and implied warranties and shall not be responsible or liable for any injuries or damages related to use of a Silicon Labs product in such unauthorized applications.
Note: This content may contain offensive terminology that is now obsolete. Silicon Labs is replacing these terms with inclusive language wherever possible. For more information, visit www.silabs.com/about-us/inclusive-lexicon-project

Trademark Information
Silicon Laboratories Inc.®, Silicon Laboratories®, Silicon Labs®, SiLabs® and the Silicon Labs logo®, Bluegiga®, Bluegiga Logo®, EFM®, EFM32®, EFR, Ember®, Energy Micro, Energy Micro logo and combinations thereof, "the world's most energy friendly microcontrollers", Redpine Signals®, WiSeConnect , n-Link, ThreadArch®, EZLink®, EZRadio®, EZRadioPRO®, Gecko®, Gecko OS, Gecko OS Studio, Precision32®, Simplicity Studio®, Telegesis, the Telegesis Logo®, USBXpress® , Zentri, the Zentri logo and Zentri DMS, Z-Wave®, and others are trademarks or registered trademarks of Silicon Labs. ARM, CORTEX, Cortex-M3 and THUMB are trademarks or registered trademarks of ARM Holdings. Keil is a registered trademark of ARM Limited. Wi-Fi is a registered trademark of the Wi-Fi Alliance. All other products or brand names mentioned herein are trademarks of their respective holders.

Silicon Laboratories Inc.
400 West Cesar Chavez
Austin, TX 78701
USA

www.silabs.com