SIM800H User Manual

Compliance Information

FCC Compliance Statement: This device complies with Part 15 of the FCC Rules . Operation is subject to the following two conditions: 1. This device may not cause harmful interference, and 2. This device must accept any interference received, including interference that may cause undesired operation. This device must accept any interference received, including interference that may cause undesired operation. Product that is a radio transmitter is labeled with FCC ID.

FCC Caution:

(1)Exposure to Radio Frequency Radiation. This equipment must be installed and operated in accordance with provided instructions and the antenna(s) used for this transmitter must be installed to provide a separation distance of at least 20 cm from all persons and must not be collocated or operating in conjunction with any other antenna or transmitter. End-users and installers must be provided with antenna installation instructions and transmitter operating conditions for satisfying RF exposure compliance.

(2) Any changes or modifications not expressly approved by the grantee of this device could void the user's authority to operate the equipment.

(3) This Transmitter must not be co-located or operating in conjunction with any other antenna or transmitter.

(4) Changes or modifications to this unit not expressly approved by the party responsible for compliance could void the user authority to operate the equipment.

(5) the modules FCC ID is not visible when installed in the host, or

(6) if the host is marketed so that end users do not have straight forward commonly used methods for access to remove the module so that the FCC ID of the module is visible; then an additional permanent label referring to the enclosed module: Contains Transmitter Module FCC ID: UDV-20160721 or Contains FCC ID: UDV-20160721 must be used.

1. SIM800H Description

1.1. Summarize

SIM800H designed by SIMCom is a quad band module which supports GSM/GPRS. The baseband circuit is based on MTK and RF circuit is based on RFMD. It works at quad bands------GSM850, EGSM900, DCS1800, and PCS1900. CPU clock is based on 26MHz crystal. The main IC includes MT6260D and RF7198.

1.2. Feature

- Quad-Band 850/900/1800/1900MHz
- GPRS multi-slot class 12/10
- GPRS mobile station class B
- Compliant to GSM phase 2/2+
  - Class 4 (2 W @ 850/900 MHz)
  - Class 1 (1 W @ 1800/1900MHz)

- Dimensions: 15.8*17.8*2.4 mm
- Weight: 1.25 g
- Control via AT commands (3GPP TS 27.007, 27.005 and SIMCom enhanced AT Commands)
- Supply voltage range 3.6~4.2 V
- Low power consumption
- Operation temperature:-30~80℃
- 88 LGA pads include
  - Interface to external SIM 3V/1.8V
  - Analog audio interface
  - RTC backup
  - Serial interface
  - USB interface
  - Keypad interface
  - LCD interface
  - Antenna pad
  - PCM
  - GPIO
  - ADC

1.3. Pin

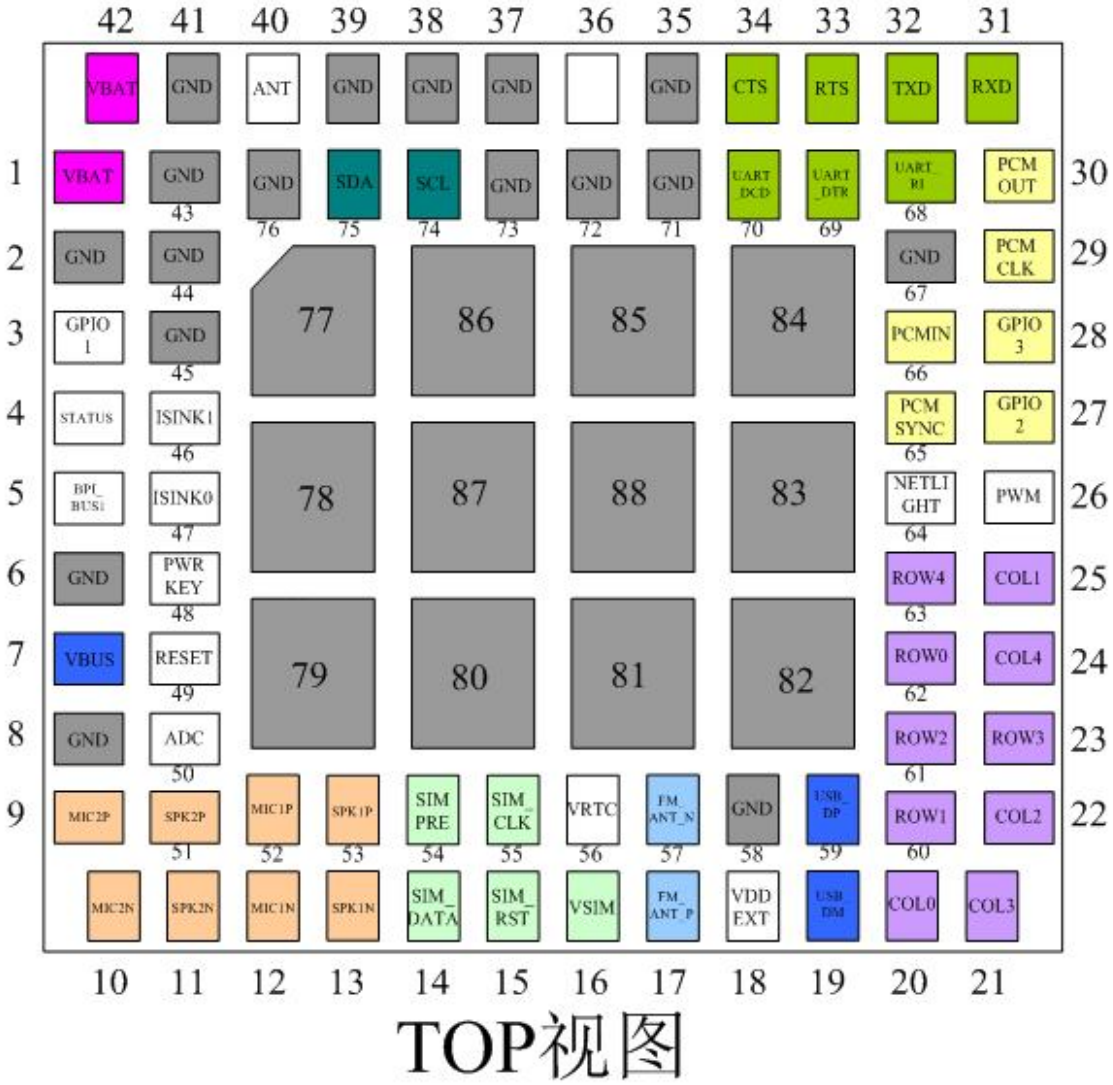
42 41 40 39 38 37 36 35 34 33 32 31
VBAT GND ANT GND GND GND GND CTS RTS TXD RXD
1 VBAT GND 43 GND 76 SDA 75 SCL 74 GND 73 GND 72 GND 71 UART DCD 70 UART DTR 69 UART RI 68 PCM OUT 30
2 GND GND 44 77 86 85 84 GND 67 PCM CLK 29
3 GPIO 1 GND 45 PCMIN 66 GPIO 3 28
4 STATUS ISINK1 46 PCM SYNC 65 GPIO 2 27
5 BPI BUS1 ISINK0 47 78 87 88 83 NETLIGHT 64 PWM 26
6 GND PWR KEY 48 ROW4 63 COL1 25
7 VBUS RESET 49 79 80 81 82 ROW0 62 COL4 24
8 GND ADC 50 ROW2 61 ROW3 23
9 MIC2P SPK2P 51 MIC1P 52 SPK1P 53 SIM PRE 54 SIM CLK 55 VRTC 56 FM ANT_N 57 GND 58 USB DP 59 ROW1 60 COL2 22
MIC2N SPK2N MIC1N SPK1N SIM DATA SIM RST VSIM FM ANT_P VDD EXT USB DM COL0 COL3
10 11 12 13 14 15 16 17 18 19 20 21
TOP视图

1.4. Picture

Figure 1: Top and Bottom view of SIM800H

1.5. Dimension

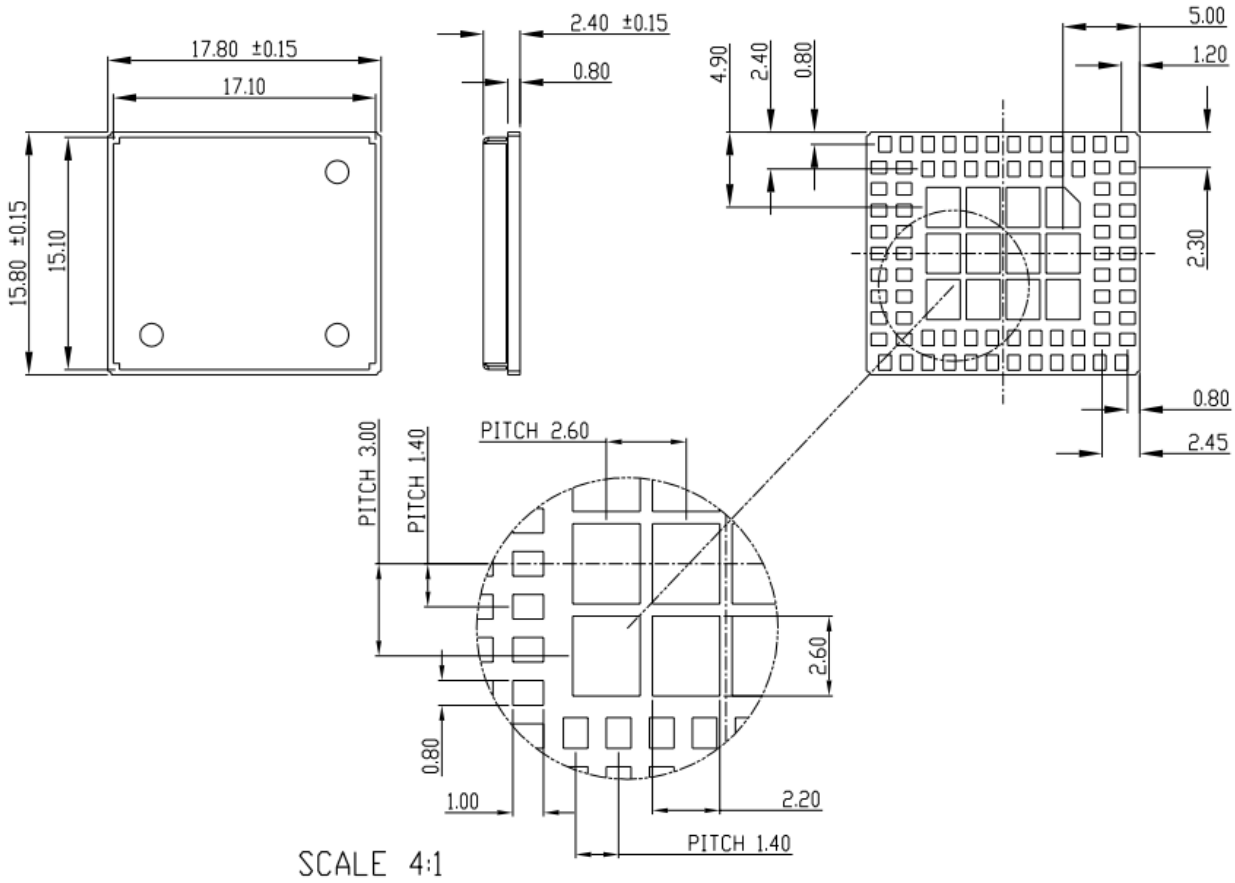

Figure 2: Dimention

2. Detail Block Diagram

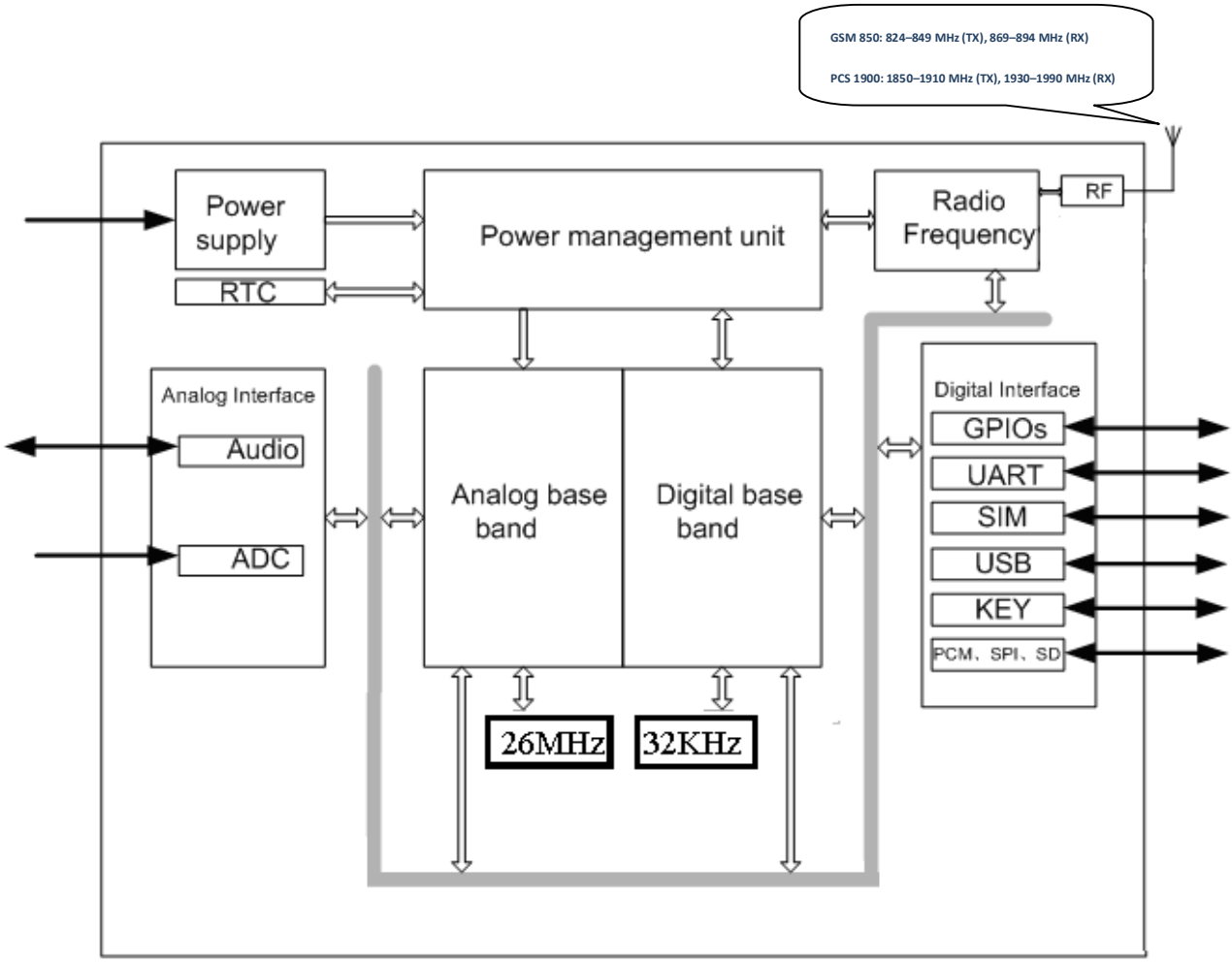

Figure 3: Block diagram of SIM800H

3. Electrical and Reliability Characteristics

3.1. Absolute Maximum Ratings

The absolute maximum ratings stated in following table are stress ratings under non-operating conditions. Stresses beyond any of these limits will cause permanent damage to SIM800H.

Table 1: Absolute maximum ratings

Symbol	Parameter	Min	Typ	Max	Unit
VBAT	Power supply voltage	-	-	4.5	V
VBUS	-	-	30	V	VBUS
I_I^*	Input current	-	-	8	mA

I_O*	Output current	-	-	8	mA

*These parameters are for digital interface pins, such as keypad, GPIO, I^2C, UART, LCD and DEBUG.

3.2. Digital Interface Characteristics

Table 2: Digital interface characteristics

Symbol	Parameter	Min	Typ	Max	Unit
I_{IH}	High-level input current	2.1	-	3.1	V
I_{IL}	Low-level input current	-0.3	-	0.7	V
V_{OH}	High-level input voltage	2.4	-	-	V
V_{OL}	Low-level input voltage	-	-	0.4	V

* These parameters are for digital interface pins, such as keypad, GPIO, I^2C, UART, LCD, PWMs and DEBUG.

3.3. SIM Card Interface Characteristics

Table 3: SIM card interface characteristics

Symbol	Parameter	Min	Typ	Max	Unit
I_{IH}	High-level input current	-1	-	1	uA
I_{IL}	Low-level input current	-1	-	1	uA
V_{IH}	High-level input voltage	1.4	-	-	V
		2.4	-	-	V
V_{IL}	Low-level input voltage	-	-	0.27	V
				0.4	V
V_{OH}	High-level output voltage	1.62	-	-	V
		2.7	-	-	V
V_{OL}	Low-level output voltage	-	-	0.36	V
		-	-	0.4	V

3.4. SIM_VDD Characteristics

Table 4: SIM_VDD characteristics

Symbol	Parameter	Min	Typ	Max	Unit
V_O	Output voltage	2.70	2.80	2.90	V
I_O	Output current	-	-	50	mA

3.5. VRTC Characteristics

Table 5: VRTC characteristics

Symbol	Parameter	Min	Typ	Max	Unit
V_{RTC-IN}	VRTC input voltage		2.8		V
I_{RTC-IN}	VRTC input current	-	3	-	uA
$V_{RTC-OUT}$	VRTC output voltage	-	2.8	-	V
$I_{RTC-OUT}$	VRTC output current	-		2	mA

3.6. Current Consumption (VBAT = 3.8V)

Table 6: Current consumption

Symbol	Parameter	Conditions			Value	Unit
I_{VRTC}	VRTC current	VBAT disconnects. Backup battery is 3 V			2	uA
I_{VBAT}	VBAT current	Power down mode			50	uA
		Sleep mode	BS-PA-MFRMS=9		1.0	mA
			BS-PA-MFRMS=5		1.2	
			BS-PA-MFRMS=2		1.8	
		Idle mode	GSM 850		19	mA
			EGSM 900			
			DCS 1800			
			PCS 1900			
		Voice call	GSM 850 EGSM 900	PCL=5	250	mA
				PCL=12	110	
				PCL=19	76	
			DCS 1800 PCS 1900	PCL=0	168	
				PCL=7	89	
				PCL=15	76	
		Data mode GPRS(1Rx,1Tx)	GSM 850 EGSM 900	PCL=5	240	mA
				PCL=12	110	
				PCL=19	83	
			DCS 1800 PCS 1900	PCL=0	170	mA
				PCL=7	95	
				PCL=15	80	
		Data mode GPRS(4Rx,1Tx)	GSM 850 EGSM 900	PCL=5	270	mA
				PCL=12	150	
				PCL=19	120	

			DCS 1800 PCS 1900	PCL=0	205	mA
				PCL=7	130	
				PCL=15	115	
		Data mode GPRS(3Rx,2Tx)	GSM 850 EGSM 900	PCL=5	440	mA
				PCL=12	185	
				PCL=19	130	
			DCS 1800 PCS 1900	PCL=0	300	mA
				PCL=7	155	
				PCL=15	122	
$I_{VBAT\text{-}peak}$	Peak current	During Tx burst			2	A

3.7. Electro-Static Discharge

SIM800H is an ESD sensitive component, so more attention should be paid to the procedure of handling and packaging. The ESD test results are shown in the following table.

Table 7: The ESD characteristics (Temperature: 25℃, Humidity: 45 %)

Pin	Contact discharge	Air discharge
VBAT	±6KV	±12KV
GND	±6KV	±12KV
RXD, TXD	±2KV	±8KV
Antenna port	±5KV	±10KV
SPK_P/SPK_N/MIC_P/MIC_N	±2KV	±5KV
PWRKEY	±2KV	±8KV

4. Radio Characteristics

4.1. Module RF Output Power

The following table shows the module conducted output power, it is followed by the 3GPP TS 05.05 technical specification requirement.

Table 8: SIM800H GSM 900 and GSM 850 conducted RF output power

GSM850、EGSM900			
PCL	Nominal output power (dBm)	Tolerance (dB) for conditions	
		Normal	Extreme

5	33	±2	±2.5
6	31	±3	±4
7	29	±3	±4
8	27	±3	±4
9	25	±3	±4
10	23	±3	±4
11	21	±3	±4
12	19	±3	±4
13	17	±3	±4
14	15	±3	±4
15	13	±3	±4
16	11	±5	±6
17	9	±5	±6
18	7	±5	±6
19-31	5	±5	±6

Table 9: SIM800H DCS 1800 and PCS 1900 conducted RF output power

DCS1800、PCS1900			
PCL	Nominal output power (dBm)	Tolerance (dB) for conditions	
		Normal	Extreme
0	30	±2	±2.5
1	28	±3	±4
2	26	±3	±4
3	24	±3	±4
4	22	±3	±4
5	20	±3	±4
6	18	±3	±4
7	16	±3	±4
8	14	±3	±4
9	12	±4	±5
10	10	±4	±5
11	8	±4	±5
12	6	±4	±5
13	4	±4	±5
14	2	±5	±6
15	0	±5	±6

For the module's output power, the following is should be noted:

At GSM900 and GSM850 band, the module is a class 4 device, so the module's output power should not exceed 33dBm, and at the maximum power level, the output power tolerance should not exceed +/-2dB under normal condition and +/-2.5dB under extreme condition.

At DCS1800 and PCS1900 band, the module is a class 1 device, so the module's output power should not exceed 30dBm, and at the maximum power level, the output power tolerance should not exceed +/-2dB under normal condition and +/-2.5dB under extreme condition.

4.2. Module RF Receive Sensitivity

The following table shows the module's conducted receive sensitivity, it is tested under static condition.

Table 10: SIM800H conducted RF receive sensitivity

Frequency	Receive sensitivity（Typical）	Receive sensitivity(Max)
GSM850	-108dBm	-106dBm
EGSM900	-108dBm	-106dBm
DCS1800	-108dBm	-106dBm
PCS1900	-108dBm	-106dBm

4.3. Module Operating Frequencies

The following table shows the module's operating frequency range; it is followed by the 3GPP TS 05.05 technical specification requirement.

Table 11: SIM800H operating frequencies

Frequency	Receive	Transmit
GSM850	869 ~ 894MHz	824 ~ 849 MHz
EGSM900	925 ~ 960MHz	880 ~ 915MHz
DCS1800	1805 ~ 1880MHz	1710 ~ 1785MHz
PCS1900	1930 ~ 1990MHz	1850 ~ 1910MHz

5. Antenna interface

There are three antenna ports for SIM800H, GSM antenna port named RF_ANT, The RF interface of the three antenna ports has an impedance of 50Ω.The maximum gain of the GSM antenna gain should not exceed 3dBi considering the SAR radio. No antenna gain may be used that would exceed the 2W EIRP power limit in 1900MHz band.

- The input impendence of the antenna should be 50Ω, and the VSWR should be less than 2.
- It is recommended that the GSM antenna.
- The isolations of the three antenna should be bigger than 30db

It have according to reference trace and matching circuit testing all FCC items,and all items satisfy FCC requirements.Only the reference trace and matching circuit is certified,
antenna design must refer to it, any other deviations require testing Class II applications as required by FCC. The certified matching circuit as following:

5.1 GSM Antenna Interface

There is a GSM antenna pad named RF_ANT for SIM800H the connection of the antenna must be decoupled from DC voltage. This is necessary because the antenna connector is DC coupled to ground via an inductor for ESD protection.
The external antenna must be matched properly to achieve best performance, so the matching circuit is necessary, the connection is recommended as following:

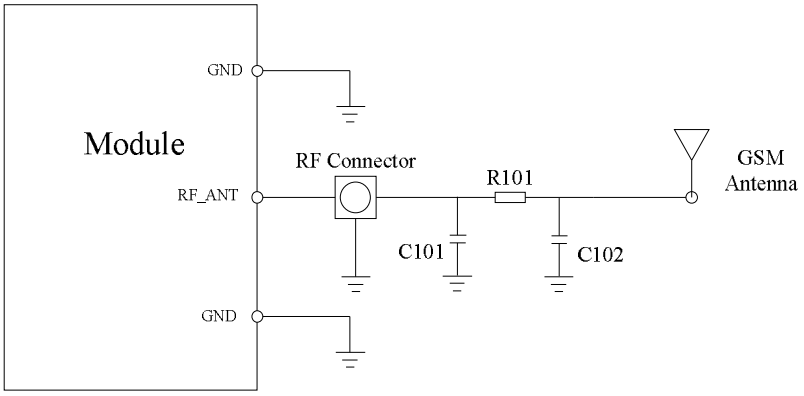

Figure1: GSM antenna matching circuit

R101，C101，C102 are the matching circuit, the value should be defined by the antenna design. normally R101 is 0Ω, C101 和 C102 are not SMD. The RF connector is used for conducted

5.1 Dipole Antenna Reference PCBLayout Requirements.

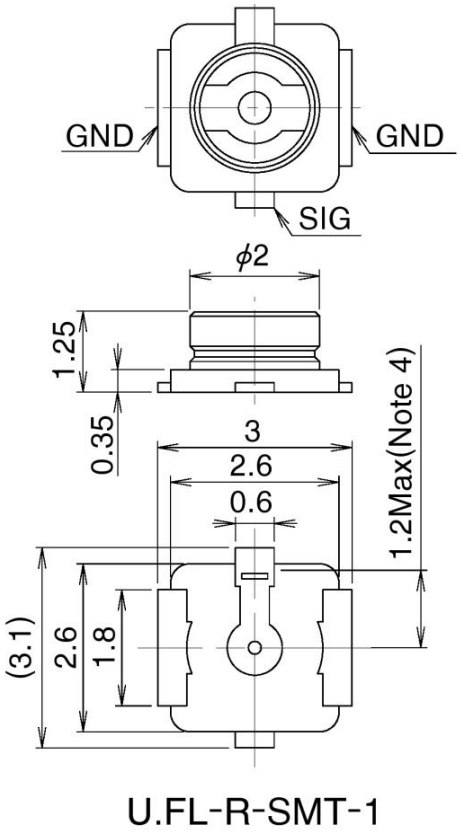

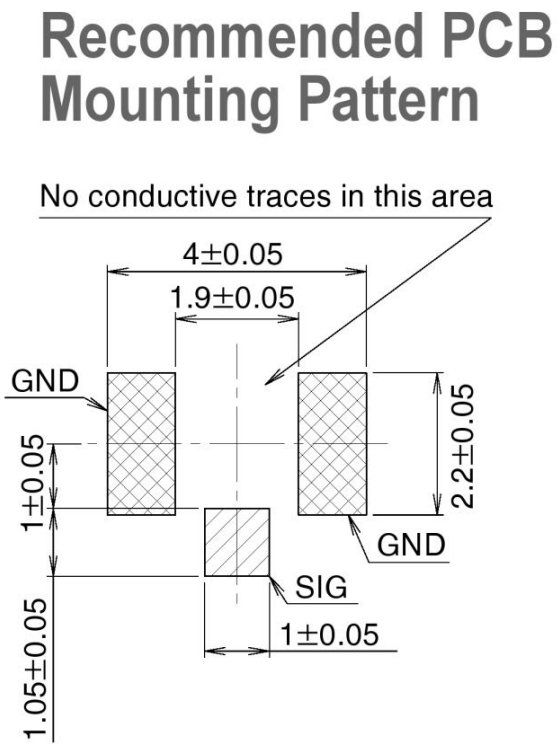

5.2. Dipole Antenna Reference Design PCB

Mount these devices with brown mark facing up. Units: mm

Line width should be designed to provide 50Ωimpedance matching characteristics.

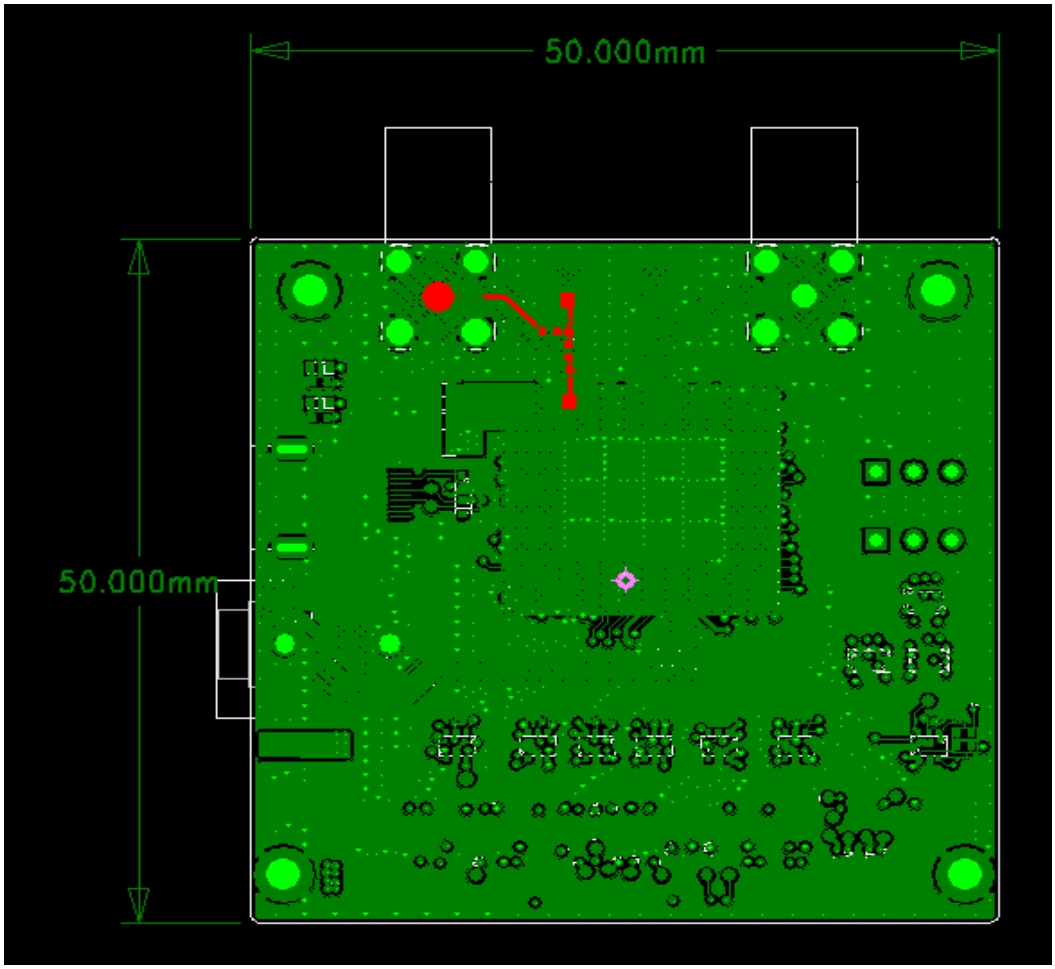
50.000mm
50.000mm

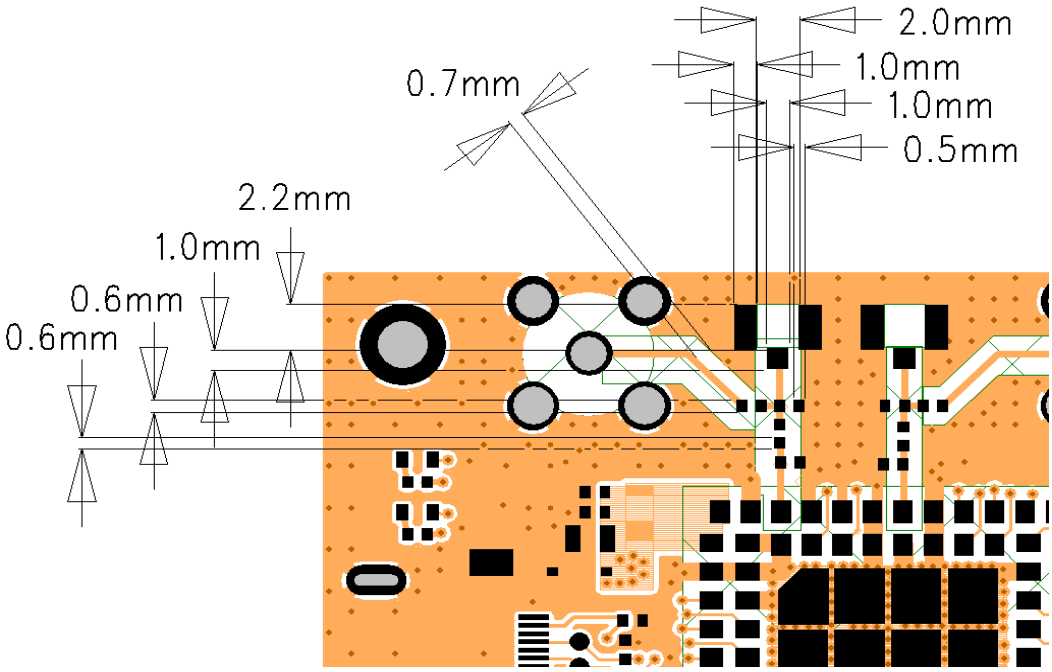
2.0mm
1.0mm
1.0mm
0.5mm
0.7mm
2.2mm
1.0mm
0.6mm
0.6mm

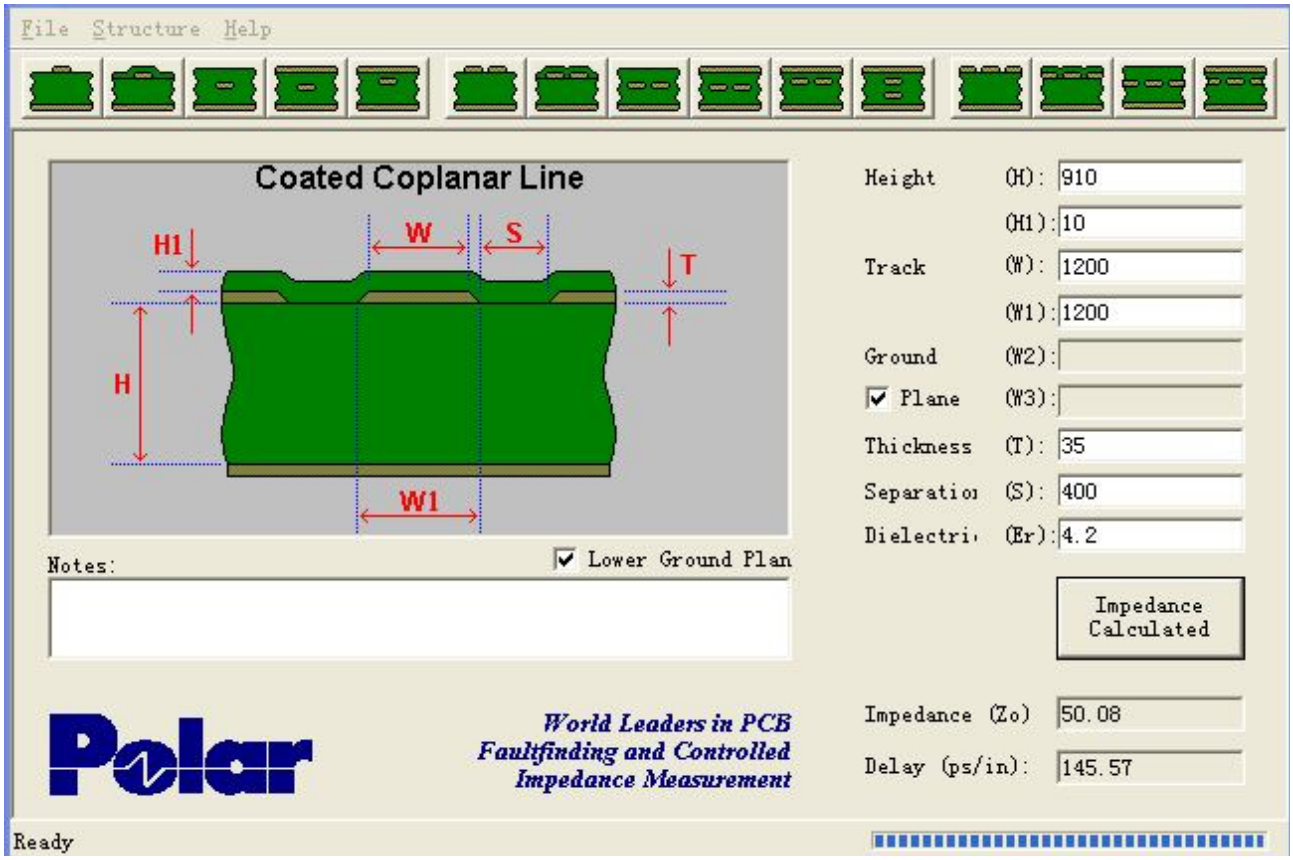

5.3 Dipole Antenna Reference Design Schematic

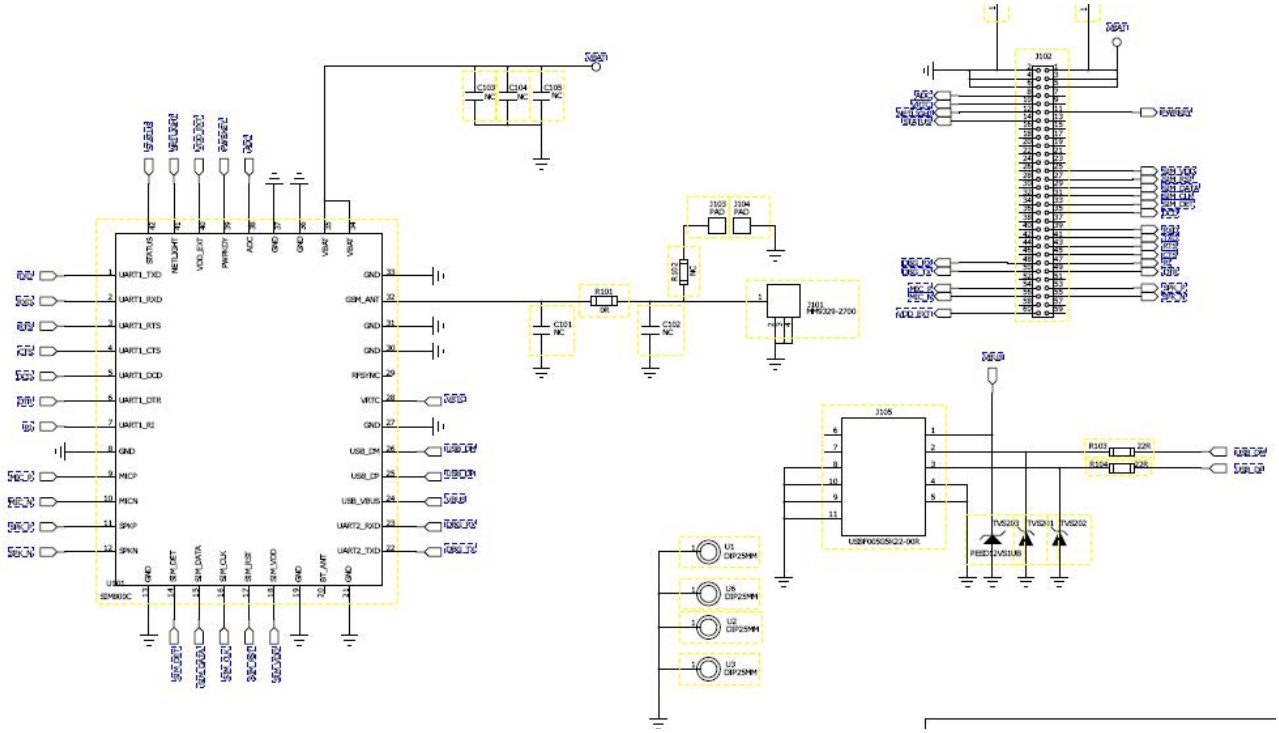

Contact us:

Shanghai SIMCom Wireless Solutions Co.,Ltd.
Address: Building A, SIM Technology Building, No. 633, Jinzhong Road, Shanghai, P. R. China 200335
Tel: +86 21 3252 3300
Fax: +86 21 3252 2030
URL: www.sim.com/wm