A company of SIM Tech

SIM7600A_User Manual_V1.01

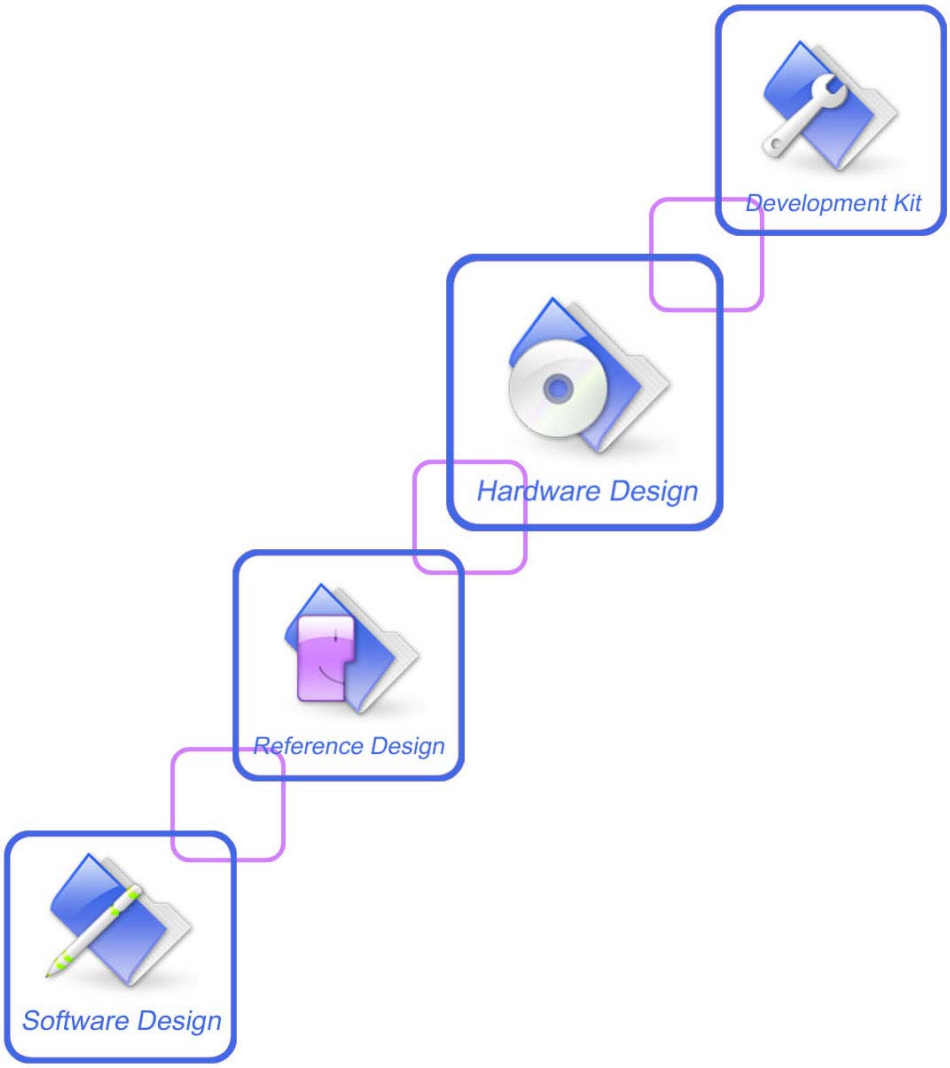

Compliance Information:

FCC Compliance Statement: This device complies with Part 15 of the FCC Rules . Operation is subject to the following two conditions: 1. This device may not cause harmful interference, and 2. This device must accept any interference received, including interference that may cause undesired operation. This device must accept any interference received, including interference that may cause undesired operation. Product that is a radio transmitter is labeled with FCC ID.

FCC Caution:

(1)Exposure to Radio Frequency Radiation. This equipment must be installed and operated in accordance with provided instructions and the antenna(s) used for this transmitter must be installed to provide a separation distance of at least 20 cm from all persons and must not be collocated or operating in conjunction with any other antenna or transmitter. End-users and installers must be provided with antenna installation instructions and transmitter operating conditions for satisfying RF exposure compliance.

(2)Any changes or modifications not expressly approved by the grantee of this device could void the user's authority to operate the equipment.

(3)This Transmitter must not be co-located or operating in conjunction with any other antenna or transmitter.

(4)Changes or modifications to this unit not expressly approved by the party responsible for compliance could void the user authority to operate the equipment.

(5) the modules FCC ID is not visible when installed in the host, or (6) if the host is marketed so that end users do not have straight forward commonly used methods for access to remove the module so that the FCC ID of the module is visible; then an additional permanent label referring to the enclosed module: Contains Transmitter Module FCC ID: UDV-201709 or Contains FCC ID: UDV-201709

SIMCOM CONFIDENTIAL FILE

Document Title	SIM7600A_User Manual
Version	V1.01
Date	2017-10-10
Status	Released
Document Control ID	SIM7600A_User Manual_V1.01

General Notes

SIMCom offers this information as a service to its customers to support the application and engineering efforts that use the products designed by SIMCom. The information provided is based on the requirements specifically from the customers. SIMCom has not undertaken any independent search for additional relevant information, including any information that may be in the customer's possession. Furthermore, the system validation of the product designed by SIMCom within a larger electronic system remains the responsibility of the customer or the customer's system integrator. All specifications supplied herein are subject to change without notice.

Copyright

This document contains the proprietary technical information which is the property of SIMCom Limited, copying of this document, giving it to others, the using or communication of the contents thereof are forbidden without the official authority by SIMCom. Offenders are liable to the payment of the damages. All rights are reserved in the event of grant of a patent or the registration of a utility model or design. All specifications supplied herein are subject to change without notice

Copyright © SIMCom Wireless Solutions Co., Ltd. 2017

SIMCOM CONFIDENTIAL FILE

Contents

Contents **4**

Table Index **6**

Figure Index **7**

Revision History **8**

1 Introduction **9**
1.1 Product Outline 9
1.2 Hardware Interface Overview 9
1.3 Hardware Block Diagram 9
1.4 Functional Overview 10

2 Package Information **12**
2.1 Pin Assignment Overview 12
2.2 Pin Description 14
2.3 Mechanical Information 18
2.4 Footprint Recommendation 19

3 Interface Application **20**
3.1 Power Supply 20
3.1.1 Power supply Design Guide 20
3.1.2 Recommended Power Supply Circuit 21
3.1.3 Voltage Monitor 22
3.2 Power on/Power off/Reset Function 22
3.2.1 Power on 22
3.2.2 Power off 23
3.2.3 Reset Function 24
3.3 UART Interface 25
3.3.1 UART Design Guide 25
3.3.2 RI and DTR Behavior 27
3.4 USB Interface 27
3.4.1 USB Application Guide 28
3.5 USIM Interface 28
3.5.1 USIM Application Guide 29
3.5.2 SIM Card Design Guide 29
3.5.3 Recommended USIM Card Holder 30
3.6 PCM Interface 31
3.6.1 PCM Timing 31
3.6.2 PCM Application Guide 32
3.7 I2C Interface 33
3.7.1 I2C Design Guide 33
3.8 Network Status 34
3.9 Operating Status Indication 34
3.10 Pin Multiplex Function 34

SIMCOM CONFIDENTIAL FILE

3.11 Other interface 35
3.11.1 Sink Current Source 35
3.11.2 ADC 36

4 RF Specifications 37
4.1 WCDMA/LTE RF Specifications 37
4.2 WCDMA/LTE Antenna Design Guide 38
4.3 GNSS 41
4.3.1 GNSS Technical specification 41
4.3.2 GNSS Application Guide 42

5 Electrical Specifications 44
5.1 Absolute Maximum Ratings 44
5.2 Operating Conditions 44
5.3 Operating Mode 45
5.3.1 Operating Mode Definition 45
5.3.2 Sleep Mode 46
5.3.3 Minimum Functionality Mode and Flight Mode 46
5.4 Current Consumption 46
5.5 ESD Notes 47

6 SMT Production Guide 48
6.1 Top and Bottom View of Module 48
6.2 Typical SMT Reflow Profile 48
6.3 Moisture Sensitivity Level (MSL) 49
6.4 Stencil Foil Design Recommendation 49

7 Packaging 50

Appendix 52
A. Reference Design 52
B. Coding Schemes and Maximum Net Data Rates over Air Interface 53
C. Related Documents 55
D. Terms and Abbreviations 57
E. Safety Caution 59

SIMCOM CONFIDENTIAL FILE

Table Index

Table 1: SIM7600A frequency bands 9
Table 2: General features 10
Table 3: Pin Definitions 13
Table 4: IO parameters definition 14
Table 5: Pin description 14
Table 6: VBAT Pins electronic characteristic 20
Table 7: Recommended zener diode list 21
Table 8: Power on timing and electronic characteristic 23
Table 9: Power off timing and Electronic Characteristic 24
Table 10: RESET pin electronic characteristic 25
Table 11: USIM Electronic characteristic in 1.8V mode (USIM_VDD=1.8V) 28
Table 12: USIM Electronic characteristic 3.0V mode (USIM_VDD=2.95V) 29
Table 13: Amphenol USIM Socket Pin Description 30
Table 14: PCM Format 31
Table 15: PCM Timing Parameters 32
Table 16: NETLIGHT pin status 34
Table 17: Pin definition of the STATUS 34
Table 18: Pin multiplex function list 35
Table 19: Sink current electronic characteristic 35
Table 20: ADC Electronic Characteristics 36
Table 21: Conducted transmission power 37
Table 22: Operating frequencies 37
Table 23: Conducted receive sensitivity 37
Table 24: Reference sensitivity (QPSK) 37
Table 25: Trace Loss 38
Table 26: Recommended TVS 39
Table 27: LNA requirements 43
Table 28: Absolute maximum ratings 44
Table 29: Recommended operating ratings 44
Table 30: 1.8V Digital I/O characteristics* 44
Table 31: Operating temperature 45
Table 32: Operating mode Definitions 45
Table 33: Current consumption on VBAT Pins (VBAT=3.8V) 47
Table 34: The ESD performance measurement table (Temperature: 25℃, Humidity: 45%) 47
Table 35: Moisture Sensitivity Level and Floor Life 49
Table 36: Tray size 50
Table 37: Small Carton size 51
Table 38: Big carton size 51
Table 39: Coding schemes and maximum net data rates over air interface 53
Table 40: Related documents 55
Table 41: Terms and Abbreviations 57
Table 42: Safety caution 59

SIMCOM CONFIDENTIAL FILE

Figure Index

Figure 1: SIM7600A Block Diagram 10
Figure 2: Pin assignment overview 12
Figure 3: Dimensions (Unit: mm) 18
Figure 4: Footprint recommendation (Unit: mm) 19
Figure 5: Power supply application circuit 20
Figure 6: Linear regulator reference circuit 21
Figure 7: Switching modepower supply reference circuit 21
Figure 8: ReferencePower on/offCircuit 22
Figure 9: Power on timing sequence 23
Figure 10: Power off timing sequence 24
Figure 11: Reference reset circuit 25
Figure 12: UART full modem 26
Figure 13: UART null Modem 26
Figure 14: Reference circuit of level shift 26
Figure 15: RI behaviour（SMS and URC report） 27
Figure 16: RI behaviour（voice call） 27
Figure 17: USB reference circuit 28
Figure 18: USIM interface reference circuit 29
Figure 19: Amphenol SIM card socket 30
Figure 20: PCM_SYNC timing 31
Figure 21: EXT codec to module timing 31
Figure 22: Module to EXT codec timing 32
Figure 23: Audio codec reference circuit 33
Figure 24: I2C reference circuit 33
Figure 25: NETLIGHT reference circuit 34
Figure 26: ISINK reference circuit 35
Figure 27: Antenna matching circuit (MAIN_ANT) 38
Figure 28: Antenna matching circuit (DIV_ANT) 39
Figure 29: Antenna matching circuit (MAIN_ANT) 41
Figure 30: Active antenna circuit 42
Figure 31: Passive antenna circuit (Default) 42
Figure 32: Top and bottom view of Module 48
Figure 33: The ramp-soak-spike Reflow Profile of Module 48
Figure 34: Packaging introduce 50
Figure 34: Module tray drawing introduce 50
Figure 36: Small carton drawing introduce 51
Figure 37: Big carton drawing introduce 51
Figure 38: Reference design 52

SIMCOM CONFIDENTIAL FILE

Revision History

Data	Version	Description of change	Author
2016-09-30	V1.00	new	Shengwu.sun

SIMCOM CONFIDENTIAL FILE

1 Introduction

This document describes the electronic specifications, RF specifications, interfaces, mechanical characteristics and testing results of the SIMCom SIM7600A. With the help of this document and other software application notes/user guides, users can understand and use modules to design and develop applications quickly.

1.1 Product Outline

The SIM7600A support many air-interface standards, refer to the following table.

Table 1: SIM7600A frequency bands

Standard	Frequency	SIM7600A
WCDMA	BAND2	✓
	BAND5	✓
LTE	LTE-FDD B2	✓
	LTE-FDD B4	✓
	LTE-FDD B12	✓

With a smallphysical dimension of 30*30*2.9 mm and with the functionsintegrated, the Module can meet almost any space requirement in users' applications, such as smart phones, PDA's, industrial handhelds, machine-to-machine, vehicle applications, etc.

1.2 Hardware Interface Overview

The interfaces that are described in detail in the next chapters include:

- **Power Supply**
- **USB Interface**
- **UART Interface**
- **USIM Interface**
- **GPIO**
- **ADC**
- **Power Output**
- **Current Sink Source**
- **PCM Interface**
- **I2C Interface**

1.3 Hardware Block Diagram

The block diagram of the Module is shown in the figure below.

SIMCOM CONFIDENTIAL FILE

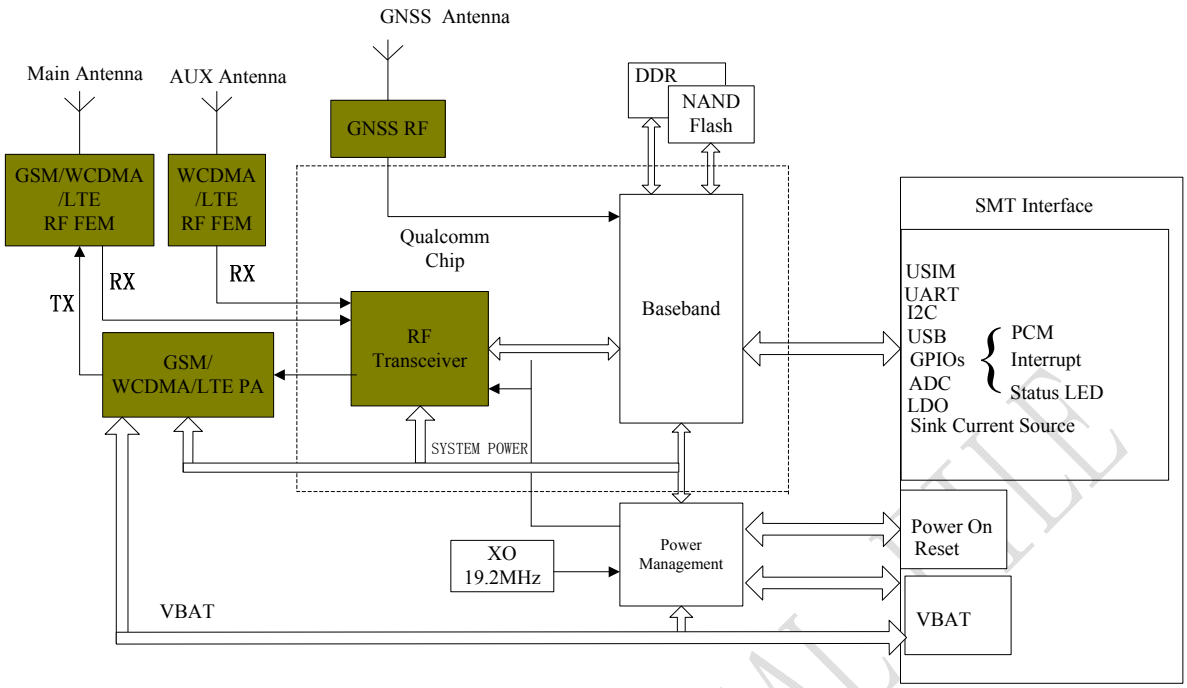

Figure 1: SIM7600A Block Diagram

1.4 Functional Overview

Table 2: General features

Feature	Implementation
Power supply	Single supply voltage 3.4～4.2V
Power saving	Current in sleep mode : <5mA
Radio frequency bands	Please refer to the table 1
Transmitting power	WCDMA: Class 3 (0.25W) LTE: Class 3 (0.25W)
Data Transmission Throughout	HSPA+: 5.76 Mbps(UL), 42 Mbps(DL) LTE Category 1: 10 Mbps (DL) LTE Category 1: 5 Mbps (UL)
Antenna	WCDMA /LTE main antenna WCDMA /LTE auxiliary antenna
SMS	MT, MO, CB, Text and PDU mode SMS storage: USIM card or ME(default) Transmission of SMS alternatively over CS or PS.
USIM interface	Support identity card: 1.8V/ 3V
USIM application toolkit	Support SAT class 3, GSM 11.14 Release 98 Support USAT
Phonebook management	Support phonebook types: DC,MC,RC,SM,ME,FD,ON,LD,EN

Audio feature	Support PCM interface Only support PCM master mode and short frame sync, 16-bit linear data formats
UART interface	A full modem serial port by default Baud rate: 300bps to 4Mbps(default:115200bps) Auto-bauding baud rate: 9600,19200,38400,57600,115200bps Can be used as the AT commands or data stream channel. Support RTS/CTS hardware handshake Multiplex ability according to GSM 07.10 Multiplexer Protocol.
USB	USB 2.0 specification-compliant as a peripheral
Firmware upgrade USB	Firmware upgrade over USB interface USB 2.0 specification-compliant as a peripheral
Physical characteristics	Weight:5.5g Size:30*30*2.9mm
Temperature range	Normal operation temperature: -30°C to +80°C Extended operation temperature: -40°C to +85°C* Storage temperature -45°C to +90°C

Note: Module is able to make and receive voice calls, data calls, SMS and make WCDMA/HSPA+/LTE traffic in -40℃ ~ +85℃. The performance will be reduced slightly from the 3GPP specifications if the temperature is outside the normal operating temperature range and still within the extreme operating temperature range.

SIMCOM CONFIDENTIAL

2 Package Information

2.1 Pin Assignment Overview

All functions of the SIM7600A will be provided through 56 pads that will be connected to the customers' platform. The following Figure is a high-level view of the pin assignment of the SIM7600A.

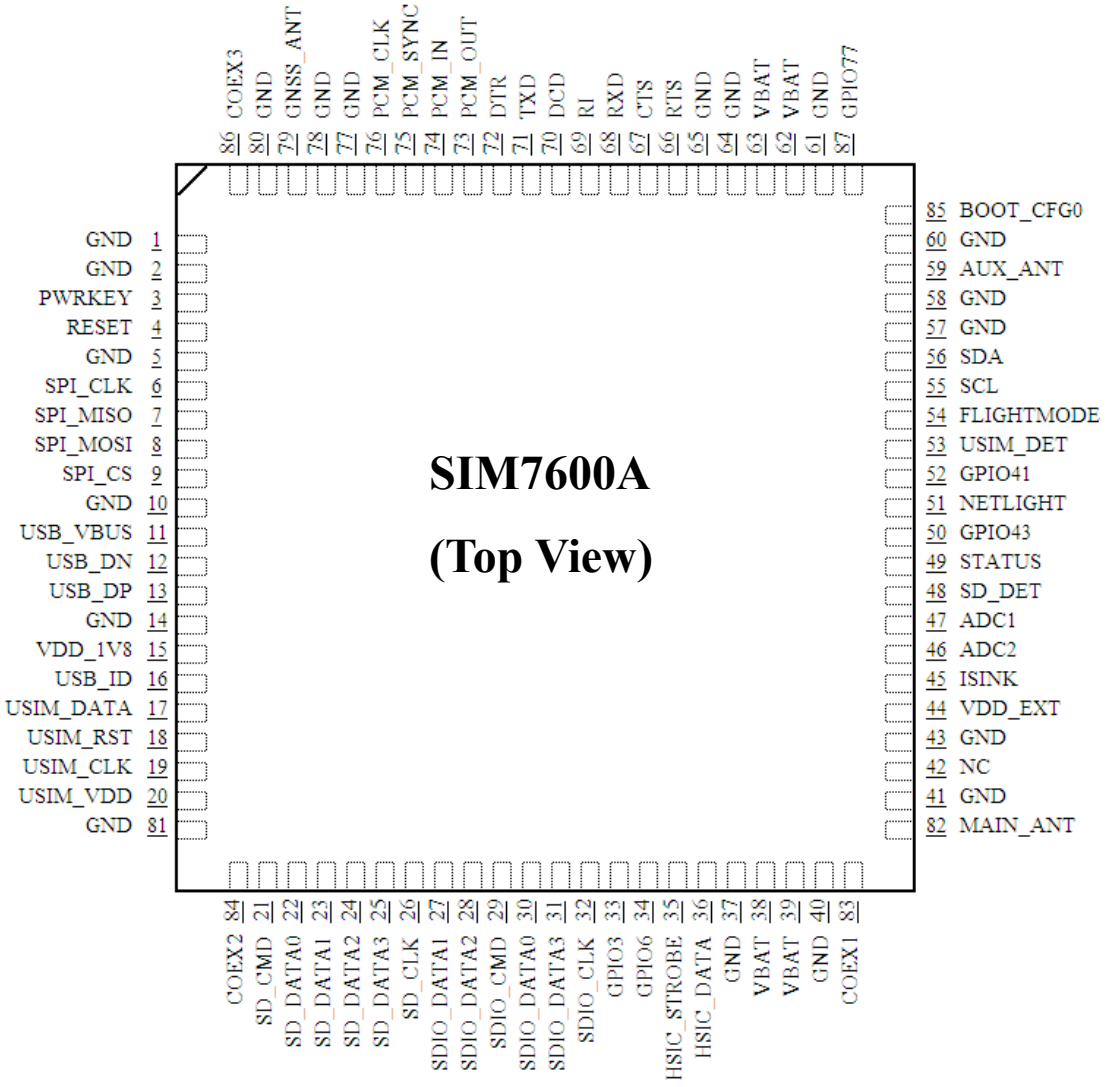

Figure 2: Pin assignment overview

Table 3: Pin Definitions

Pin No.	Pin name	Pin No.	Pin name
1	GND	2	GND
3	PWRKEY	4	RESET
5	GND	6	SPI_CLK
7	SPI_MISO	8	SPI_MOSI
9	SPI_CS	10	GND
11	USB_VBUS	12	USB_DN
13	USB_DP	14	GND
15	VDD_1V8	16	USB_ID
17	USIM_DATA	18	USIM_RST
19	USIM_CLK	20	USIM_VDD
21	SD_CMD	22	SD_DATA0
23	SD_DATA1	24	SD_DATA2
25	SD_DATA3	26	SD_CLK
27	SDIO_DATA1	28	SDIO_DATA2
29	SDIO_CMD	30	SDIO_DATA0
31	SDIO_DATA3	32	SDIO_CLK
33	GPIO3	34	GPIO6
35	HSIC_STROBE	36	HSIC_DATA
37	GND	38	VBAT
39	VBAT	40	GND
41	GND	42	NC (RESERVED)
43	GND	44	VDD_EXT
45	ISINK	46	ADC2
47	ADC1	48	SD_DET
49	STATUS	50	GPIO43*
51	NETLIGHT	52	GPIO41
53	USIM_DET	54	FLIGHTMODE
55	SCL	56	SDA
57	GND	58	GND
59	AUX_ANT	60	GND
61	GND	62	VBAT
63	VBAT	64	GND
65	GND	66	RTS
67	CTS	68	RXD

69	RI	70	DCD
71	TXD	72	DTR
73	PCM_OUT	74	PCM_IN
75	PCM_SYNC	76	PCM_CLK
77	GND	78	GND
79	GNSS_ANT	80	GND
81	GND	82	MAIN_ANT
83	COEX1*	84	COEX2
85	BOOT_CFG0*	86	COEX3*
87	GPIO77		

Note: Before the normal power up, pin48 cannot be pulled up.

2.2 Pin Description

Table 4: IO parameters definition

Pin type	Description
PI	Power input
PO	Power output
AI	Analog input
AIO	Analog input/output
I/O	Bidirectional input /output
DI	Digital input
DO	Digital output
DOH	Digital output with high level
DOL	Digital output with low level
PU	Pull up
PD	Pull down

Table 5: Pin description

Pin name	Pin No.	Default status	Description	Comment
Power supply				
VBAT	38,39, 62,63	PI	Power supply, voltage range: 3.4～4.2V.	
VDD_EXT	44	PO	LDO power output for other external circuits with Max 150mA current output. Its output voltage is 0V by default.	If unused, keep it open.

			（The voltage can be configured to 2.8V by AT command）.	
VDD_1V8	15	PO	1.8V SMPS output with Max 50mA current output for external circuit, such as level shift circuit.	If unused, keep it open.
GND	1,2,5, 10,14,37 ,40,41,4 3,57,58, 60,61,64 ,65,77,7 8,80,81		Ground	
System Control				
PWRKEY	3	DI,PU	System power on/off control input, active low.	The high voltage is 0.8V;
RESET	4	DI, PU	System reset control input, active low.	RESET has been pulled up to 1.8V via 40Kohm resistor internally.
SD interface				
SD_CMD	21	DO	SDIO command	If unused, keep them open.
SD_DATA0	22	I/O	SDIO data	
SD_DATA1	23	I/O		
SD_DATA2	24	I/O		
SD_DATA3	25	I/O		
SD_CLK	26	DO	SDIO clock	
USIM interface				
USIM_DATA	17	I/O,PU	USIM Card data I/O, which has been pulled up via a 100KR resistor to USIM_VDD internally. Do not pull it up or down externally.	All lines of USIM interface should be protected against ESD.
USIM_RST	18	DO	USIM Reset	
USIM_CLK	19	DO	USIM clock	
USIM_VDD	20	PO	Power output for USIM card, its output Voltage depends on USIM card type automatically. Its output current is up to 50mA.	
SPI interface				
SPI_CLK	6	DO	SPI clock output	Only support SPI master mode.
SPI_MISO	7	DI	SPI master in/slave out data	

SPI_MOSI	8	DO	SPI master out/slave in data	If unused, please keep them open.
SPI_CS	9	DO	SPI chip-select output	
USB				
USB_VBUS	11	DI,PD	Valid USB detection input with 3.0~5.25V detection voltage	
USB_DN	12	I/O	Negative line of the differential, bi-directional USB signal.	
USB_DP	13	I/O	Positive line of the differential, bi-directional USB signal.	
USB_ID	16	DI	High-speed USB ID input	Keep it open.
UART interface				
RTS	66	DOH	Request to send	If unused, keep them open.
CTS	67	DI,PU	Clear to Send	
RXD	68	DI,PU	Receive Data	
RI	69	DOH	Ring Indicator	
DCD	70	DOH	Carrier detects	
TXD	71	DOH	Transmit Data	
DTR	72	DI,PU	DTE get ready	
I2C interface				
SCL	55	DO	I2C clock output	If unused, keep open, or else pull them up via 4.7KΩ resistors to 1.8V.
SDA	56	I/O	I2C data input/output	
SDIO interface				
SDIO_DATA1	27	I/O	SDIO data1	For WLAN solution
SDIO_DATA2	28	I/O	SDIO data2	
SDIO_CMD	29	DO	SDIO command	
SDIO_DATA0	30	I/O	SDIO data0	
SDIO_DATA3	31	I/O	SDIO data3	
SDIO_CLK	32	DO	SDIO clock	
HSIC interface				
HSIC_STROBE	35	DO	HSIC strobe wakeup	Reserved
HSIC_DATA	36	I/O	HSIC data	
PCM interface				
PCM_OUT	73	DO	PCM data output.	If unused, please keep them open.
PCM_IN	74	DI	PCM data input.	
PCM_SYNC	75	DO	PCM data frame sync signal.	
PCM_CLK	76	DO	PCM data bit clock.	
GPIO				
NETLIGHT	51	DO	LED control output as network status indication.	If unused, keep them open.

FLIGHTMODE	54	DI,PU	Flight Mode control input. High level(or open): Normal Mode Low level: Flight Mode	***DO NOT PULL UP GPIO43 DURING NORMAL POWER UP!***
STATUS	49	DO	Operating status output. High level: Power on and firmware ready Low level: Power off	
GPIO41	52	IO	GPIO	
GPIO43	50	IO	GPIO	
GPIO3	33	IO	GPIO	
GPIO6	34	IO	GPIO	
SD_DET	48	IO	Default: GPIO Optional: SD card detecting input. H: SD card is removed L: SD card is inserted	
USIM_DET	53	IO	Default: GPIO Optional: USIM card detecting input. H: USIM is removed L: USIM is inserted	
GPIO77	87	IO	GPIO	
RF interface				
MAIN _ANT	82	AIO	MAIN antenna soldering pad	
GNSS_ANT	79	AI	GNSS antenna soldering pad	
AUX_ANT	59	AI	Auxiliary antenna soldering pad	
Other interface				
ISINK	45	PI	Ground-referenced current sink.	If unused, please keep them open.
ADC1	47	AI	Analog-digital converter input 1	
ADC2	46	AI	Analog-digital converter input 2	
COEX1	83	I/O	RF synchronizing between Wi-Fi and LTE.	If unused, keep them open. ***DO NOT PULL UP COEX1 AND COEX2 DURING NORMAL POWER UP!***
COEX2	84	I/O		
COEX3	86	I/O		
BOOT_CFG0	85	DI,PD	Boot configuration input. Module will be forced into USB download mode by connect 85 pin to VDD_1V8 during power up.	Do place 2 test points for debug. ***DO NOT PULL UP BOOT_CFG0 DURING NORMAL POWER UP!***
NC	42		No connection.	Keep it open

2.3 Mechanical Information

The following figure shows the package outline drawing of Module.

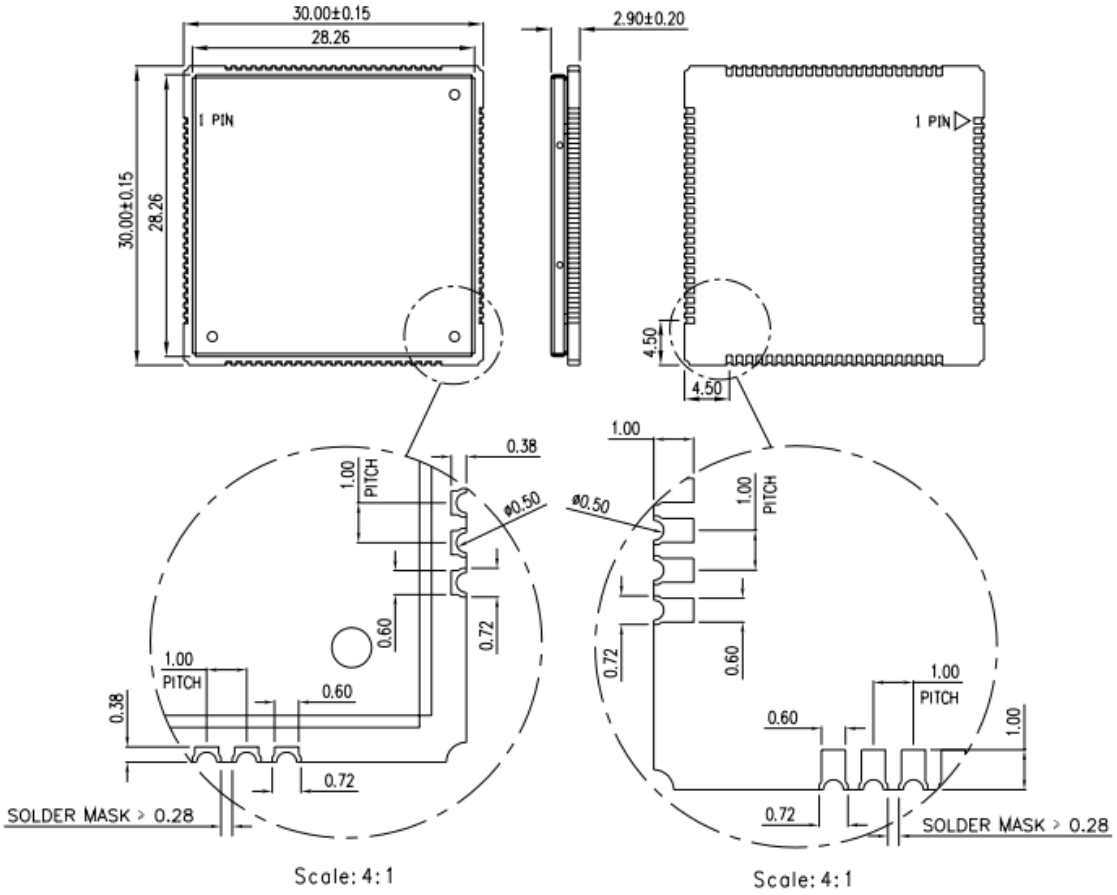

Figure 3: Dimensions (Unit: mm)

SIMCOM CONFIDENTIAL

2.4 Footprint Recommendation

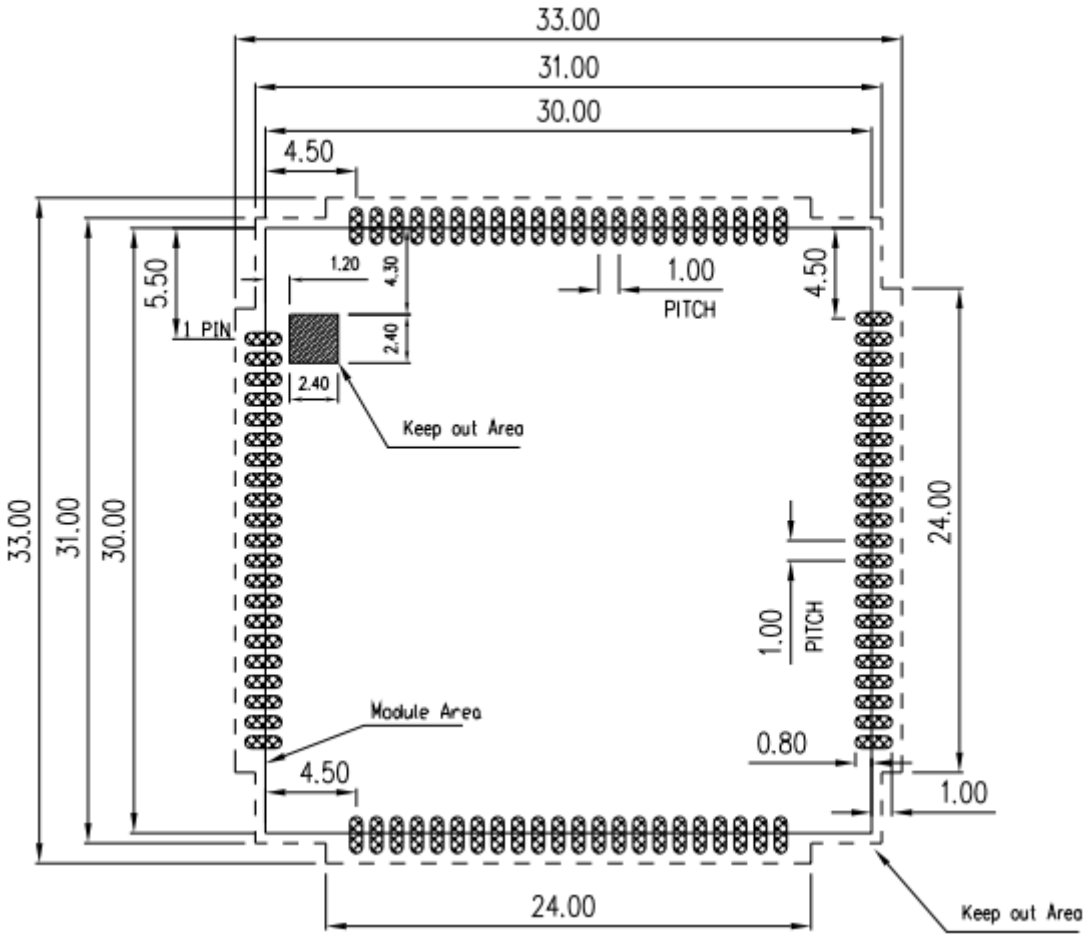

Figure 4: Footprint recommendation (Unit: mm)

SIMCOM CONFIDENTIAL

3 Interface Application

3.1 Power Supply

On VBAT pads, a ripple current up to 2A typically, may cause voltage drop. Therefore, the power supply for these pads must be able to provide sufficient current up to more than 2A in order to avoid the voltage drop of more than 300mV.

Table 6: VBAT Pins electronic characteristic

Symbol	Description	Min.	Typ.	Max.	Unit
VBAT	Module power voltage	3.4	3.8	4.2	V
$I_{VBAT(peak)}$	Module power peak current in normal mode.	1.0	-	2	A
$I_{VBAT(average)}$	Module power average current in normal mode	Please refer to the table 34			
$I_{VBAT(sleep)}$	Power supply current in sleep mode				
$I_{VBAT(power-off)}$	Module power current in power off mode.	-	-	20	uA

3.1.1 Power supply Design Guide

Make sure that the voltage on the VBAT pins will never drop below 3.4V.

Note: If the power supply for BAT pins can support up to 2A, using a total of more than 220uF capacitors is recommended, or else users must use a total of 1000uF capacitors, in order to avoid the voltage drop of more than 300mV.

Some multi-layer ceramic chip (MLCC) capacitors (0.1/1uF) with low ESR in high frequency band can be used for EMC.

These capacitors should be put as close as possible to VBAT pads. Also, user should keep VBAT trace on the circuit board wider than 2 mm to minimize PCB trace impedance. The following figure shows the recommended circuit.

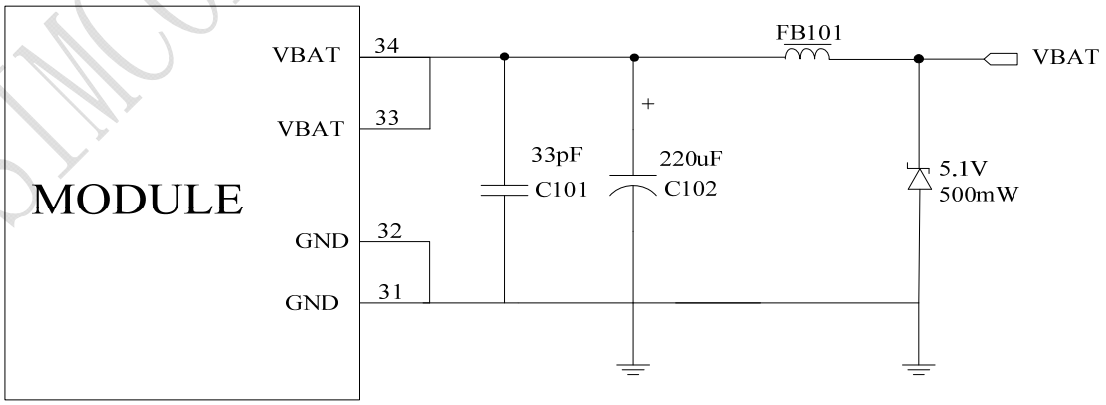

Figure 5: Power supply application circuit

SIMCOM CONFIDENTIAL FILE

In addition, in order to guard over voltage protection, it is suggested to use a zener diode with 5.1V reverse zener voltage and more than 500mW power dissipation.

Table 7: Recommended zener diode list

No.	Manufacturer	Part Number	power dissipation	Package
1	On semi	MMSZ5231BT1G	500mW	SOD123
2	Prisemi	PZ3D4V2H	500mW	SOD323
3	Vishay	MMSZ4689-V	500mW	SOD123
4	Crownpo	CDZ55C5V1SM	500mW	0805

3.1.2 Recommended Power Supply Circuit

It is recommended that a switching modepower supply or linear regulator power supply is used. It is important to make sure that all the components used in the power supply circuit can resist a peak current up to 2A.

The following figure shows the linear regulatorreference circuit with 5V input and 3.8V output.

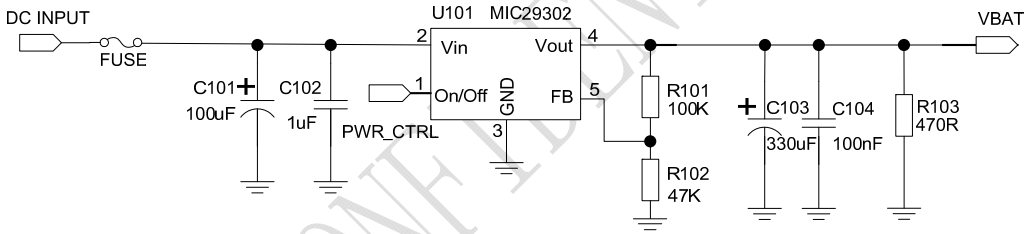

Figure 6: Linear regulator reference circuit

If there is a big voltage difference between input and output for VBAT power supply, orthe efficiency is extremely important,then a switching mode power supply will be preferable. The following figure shows theswitching mode power supply reference circuit.

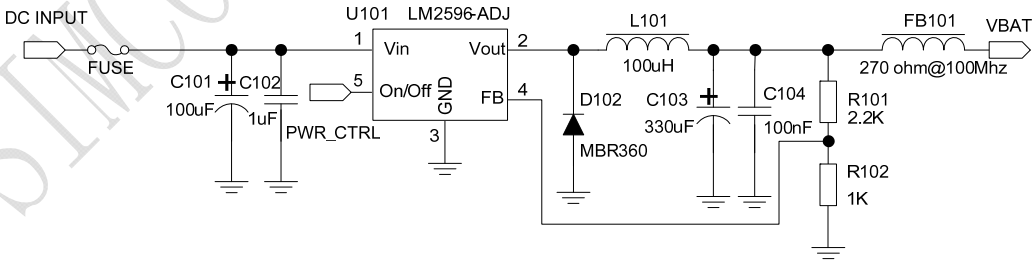

Figure 7: Switching modepower supply reference circuit

Note: The Switching Mode power supply solution for VBAT must be chosen carefully against Electro Magnetic Interference and ripple current from depraving RF performance.

SIMCOM CONFIDENTIAL FILE

3.1.3 Voltage Monitor

To monitor the VBAT voltage, the AT command “AT+CBC” can be used.
For monitoring the VBAT voltage outside or within a special range, the AT command “AT+CVALARM” can be used to enable the under-voltage warning function.
If users need to power off Module, when the VBAT voltage is out of a range, the AT command “AT+CPMVT” can be used to enable under-voltage power-off function.
Note: Under-voltage warning function and under-voltage power-off function are disabled by default. For more information about these AT commands, please refer to Document [1].

3.2 Power on/Power off/Reset Function

3.2.1 Power on

Module can be powered on by pulling the PWRKEY pin down to ground.
The PWRKEY pin has been pulled up to dVDDinternally, so you does not need to pull it up externally. It is strongly recommended to put a100nF capacitor and an ESD protection diode close to the PWRKEY pin. Please refer to the following figure for the recommended reference circuit.

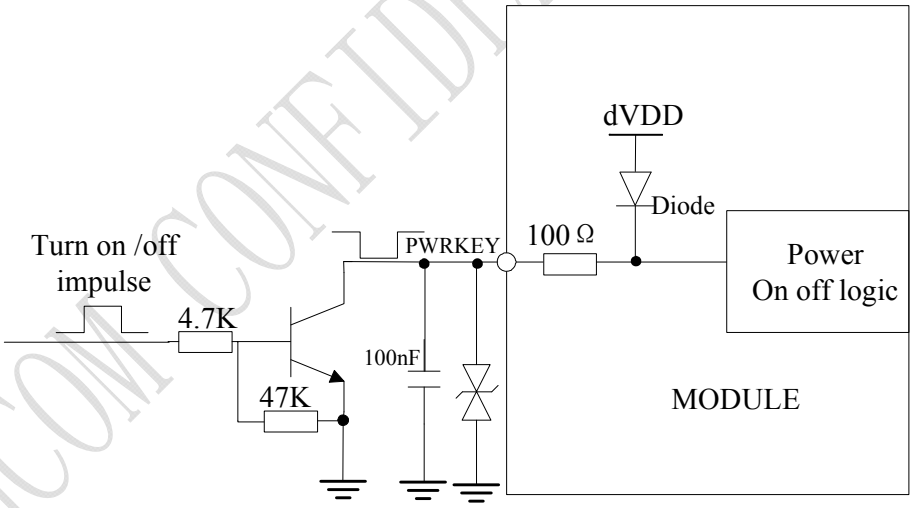

Figure 8: ReferencePower on/offCircuit

The power-on scenarios are illustrated in the following figure.

SIMCOM CONFIDENTIAL FILE

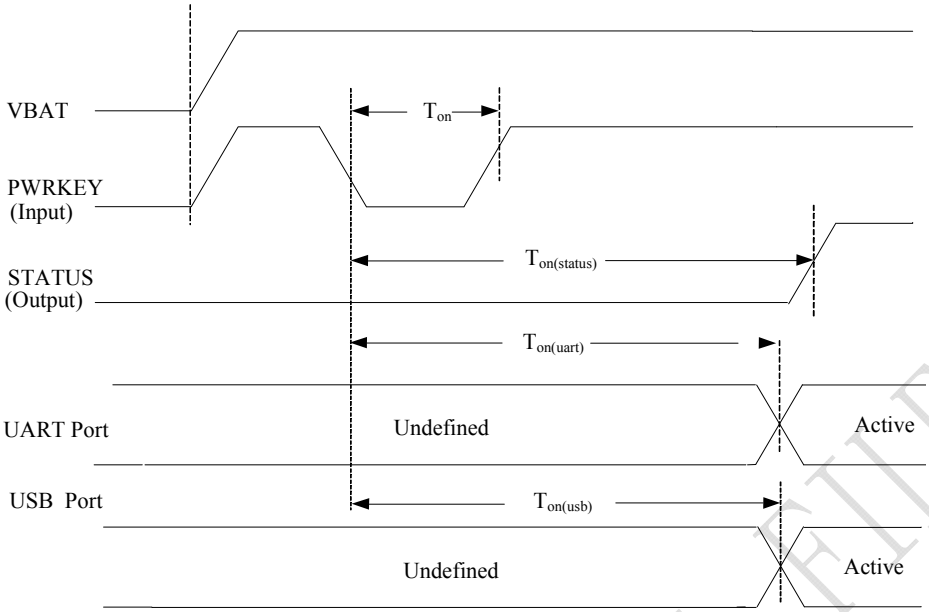

Figure 9: Power on timing sequence

Table 8: Power on timing and electronic characteristic

Symbol	Parameter	Min.	Typ.	Max.	Unit
T_{on}	The time of active low level impulse of PWRKEY pin to power on module	100	500	-	ms
$T_{on(status)}$	The time from power-on issue to STATUS pin output high level(indicating power up ready)	22	-	-	s
$T_{on(uart)}$	The time from power-on issue to UART port ready		20		s
$T_{on(usb)}$	The time from power-on issue to USB port ready		20		s
V_{IH}	Input high level voltage on PWRKEY pin	0.6	0.8	1.8	V
V_{IL}	Input low level voltage on PWRKEY pin	-0.3	0	0.5	V

3.2.2 Power off

The following methods can be used to power off Module.

- Method 1: Power off Module by pulling the PWRKEY pin down to ground.
- Method 2: Power off Module by AT command“AT+CPOF”.
- Method 3: Over-voltage or under-voltage automatic power off. The voltage range can be set by AT command“AT+CPMVT”.
- Method 4: Over-temperature or under-temperature automatic power off.

Note: If the temperature is outside the range of -30~+80 ℃, some warning will be reported via AT port. If the temperature is outside the range of -40~+85 ℃, Module will be powered off automatically.

For details about "AT+CPOF" and "AT+CPMVT", please refer to Document [1].

These procedures will make modules disconnect from the network and allow the software to enter a safe state and save data before modules are powered off completely.

The power off scenario by pulling down the PWRKEY pin is illustrated in the following figure.

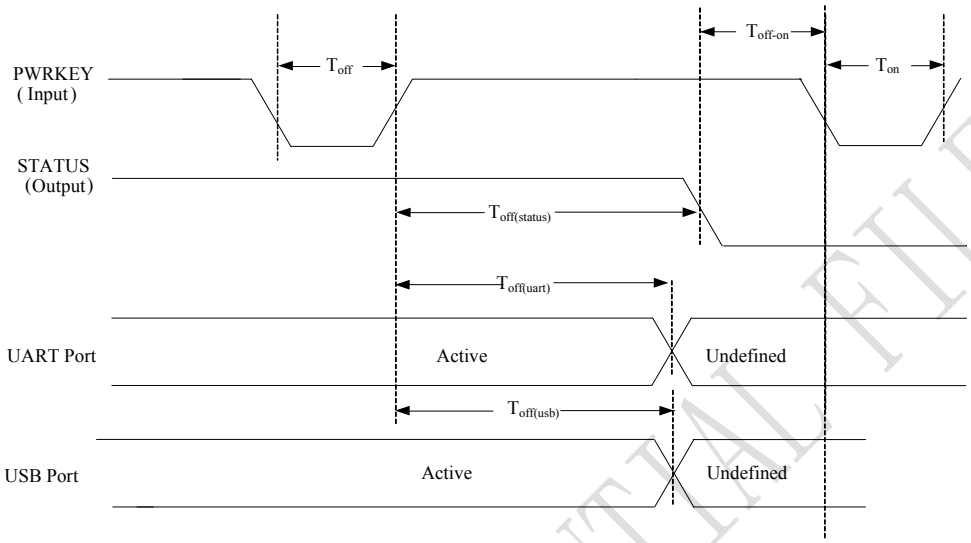

Figure 10: Power off timing sequence

Table 9: Power off timing and Electronic Characteristic

Symbol	Parameter	Time value			Unit
		Min.	Typ.	Max.	
T_{off}	The active low level time pulse on PWRKEY pin to power off module	2.5	--	--	s
$T_{off(status)}$	The time from power-off issue to STATUS pin output low level(indicating power off)*	22	-	-	s
$T_{off(uart)}$	The time from power-off issue to UART port off	15	-	-	s
$T_{off(usb)}$	The time from power-off issue to USB port off	15	-	-	s
T_{off-on}	The buffer time from power-off issue to power-on issue	0	-	-	s

3.2.3 Reset Function

Module can be reset by pulling the RESET pin down to ground.

Note: This function is only used as an emergency reset when AT command "AT+CPOF" and the PWRKEY pin all have lost efficacy.

The RESET pin has been pulled up to 1.8V internally, so it does not need to be pulled up externally. It is strongly recommended to put a100nF capacitor and an ESD protection diode close to the RESET pin. Please refer to the following figure for the recommended reference circuit.

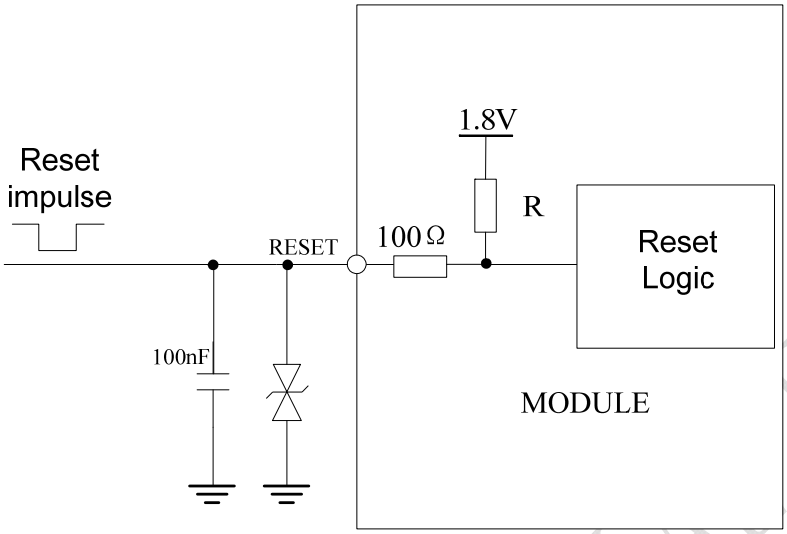

Figure 11: Reference reset circuit

Table 10: RESET pin electronic characteristic

Symbol	Description	Min.	Typ.	Max.	Unit
T_{reset}	The active low level time impulse on RESET pin to reset module	100			ms
V_{IH}	Input high level voltage	1.17	1.8	2.1	V
V_{IL}	Input low level voltage	-0.3	0	0.8	V

3.3 UART Interface

Module provides a 7-wire UART (universalasynchronous serial transmission) interface as DCE (Data Communication Equipment). AT commands and data transmission can be performed through UART interface.

3.3.1 UART Design Guide

The following figures show the reference design.

SIMCOM CONFIDENTIAL FILE

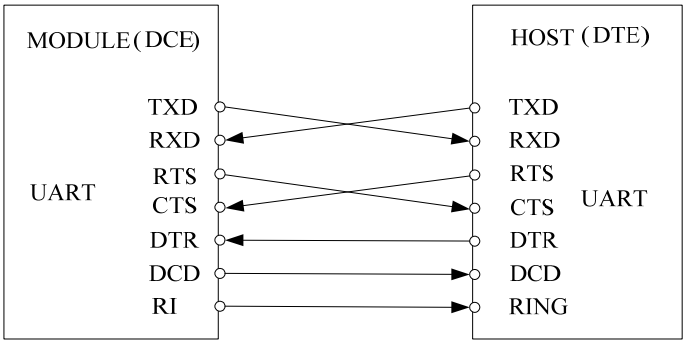

Figure 12: UART full modem

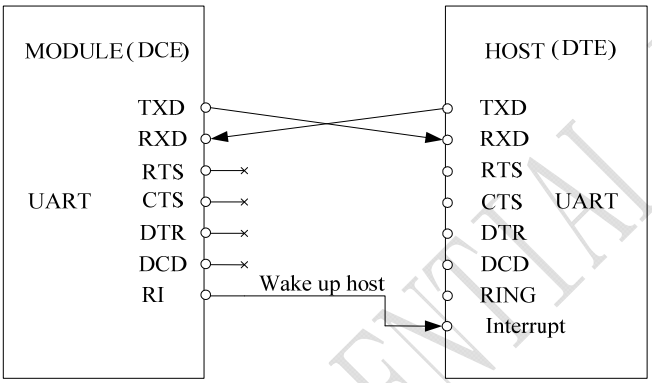

Figure 13: UART null Modem

The Module UART is 1.8V voltage interface. If user's UART application circuit is a 3.3V voltage interface, the level shifter circuits should be used for voltage matching. The TXB0108RGYR provided by Texas Instruments is recommended. The following figure shows the voltage matching reference design.

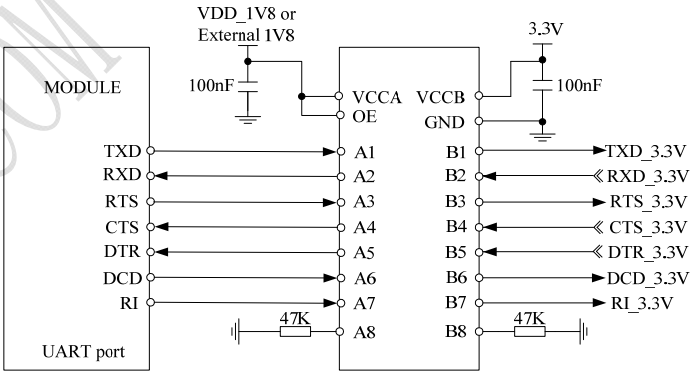

Figure 14: Reference circuit of level shift

To comply with RS-232-C protocol, the RS-232-C level shifter chip should be used to connect Module to the RS-232-C interface, for example SP3238ECA, etc.

Note: Module supports the following baud rates: 300, 600, 1200, 2400, 4800, 9600, 19200, 38400, 57600, 115200, 230400, 460800, 921600, 3200000, 3686400, 4000000bps. The default band rate is 115200bps.

SIMCOM CONFIDENTIAL FILE

3.3.2 RI and DTR Behavior

The RI pin can be used to interrupt output signal to inform the host controller such as application CPU.

Normally RI will stay at high level until certain conditions such as receiving SMS, or a URC report come in. It will then change to low level. It will stay low until the host controller clears the interrupted event with “AT+CRIRS” AT command.

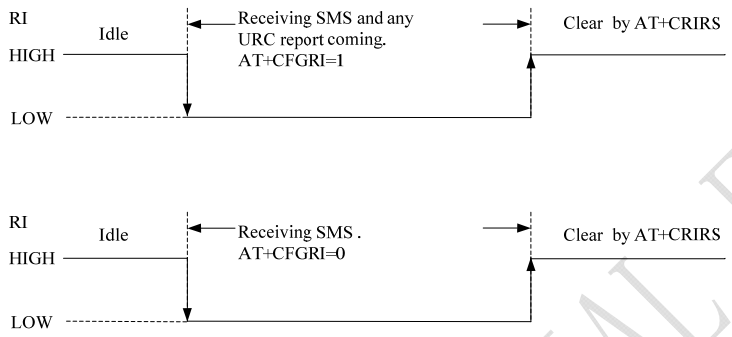

Figure 15: RI behaviour（SMS and URC report）

Normally RI will be kept high until a voice call, then it will output periodic rectangular wave with 5900ms low level and 100ms high level. It will output this kind of periodic rectangular wave until the call is answered or hung up.

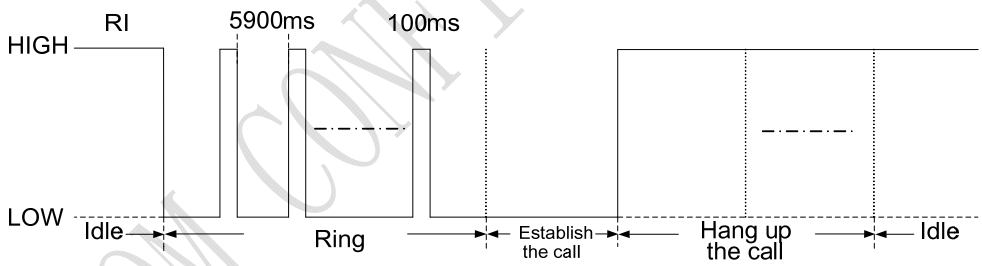

Figure 16: RI behaviour（voice call）

Note: For more details of AT commands about UART, please refer to document [1] and [22].

DTR pin can be used to wake Module from sleep. When Module enters sleep mode, pulling down DTR can wake Module.

3.4 USB Interface

The Module contains a USB interface compliant with the USB2.0 specification as a peripheral, but the USB charging function is not supported.

SIMCOM CONFIDENTIAL FILE

3.4.1 USB Application Guide

Module can be used as a USB device. Module supports the USB suspend and resume mechanism which can reduce power consumption. If there is no data transmission on the USB bus, Module will enter suspend mode automatically and will be resumed by some events such as voice call, receiving SMS, etc.

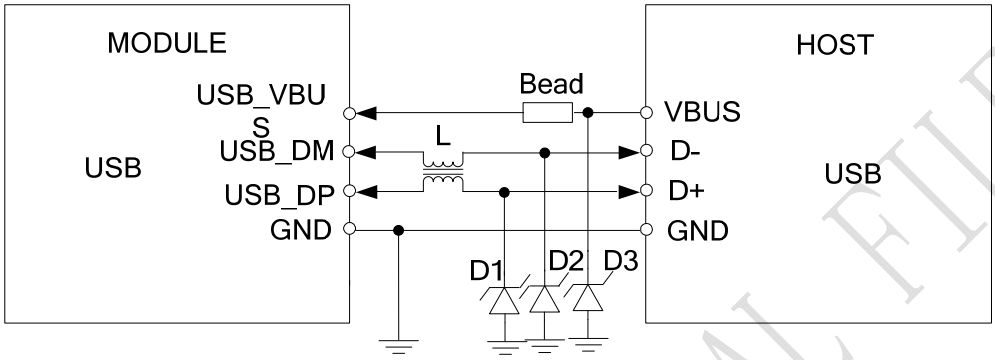

Figure 17: USB reference circuit

Because of the high bit rate on USB bus, more attention should be paid to the influence of the junction capacitance of the ESD component on USB data lines. Typically, the capacitance should be less than1pF. It is recommended to use an ESD protection component such as ESD9L5.0ST5G provided by On Semiconductor (www.onsemi.com).
D3 is suggested to select the diode with anti-ESD and voltage surge function, or customer could add a ZENER diode for surge clamping. The recommend diodes list please refer to table 7.
L is recommended (MURATA) DLW21SN371SQ2L.
Note：The USB_DM and USB_DP nets must be traced by 90Ohm+/-10% differential impedance.

3.5 USIM Interface

Module supports both 1.8V and 3.0V USIM Cards.

Table 11: USIM Electronic characteristic in 1.8V mode (USIM_VDD=1.8V)

Symbol	Parameter	Min.	Typ.	Max.	Unit
USIM_VDD	LDO power output voltage	1.75	1.8	1.95	V
V_{IH}	High-level input voltage	0.65*USIM_VDD	-	USIM_VDD +0.3	V
V_{IL}	Low-level input voltage	-0.3	0	0.35*USIM_VDD	V
V_{OH}	High-level output voltage	USIM_VDD -0.45	-	USIM_VDD	V
V_{OL}	Low-level output voltage	0	0	0.45	V

SIMCOM CONFIDENTIAL FILE

Table 12: USIM Electronic characteristic 3.0V mode (USIM_VDD=2.95V)

Symbol	Parameter	Min.	Typ.	Max.	Unit
USIM_VDD	LDO power output voltage	2.75	2.95	3.05	V
V_{IH}	High-level input voltage	0.65*USIM_VDD	-	USIM_VDD +0.3	V
V_{IL}	Low-level input voltage	-0.3	0	0.25*USIM_VDD	V
V_{OH}	High-level output voltage	USIM_VDD -0.45	-	USIM_VDD	V
V_{OL}	Low-level output voltage	0	0	0.45	V

3.5.1 USIM Application Guide

It is recommended to use an ESD protection component such as ESDA6V1W5 produced by ST (www.st.com) or SMF15C produced by ON SEMI (www.onsemi.com). Note that the USIM peripheral circuit should be close to the USIM card socket.The following figure shows the 6-pin SIM card holder reference circuit.

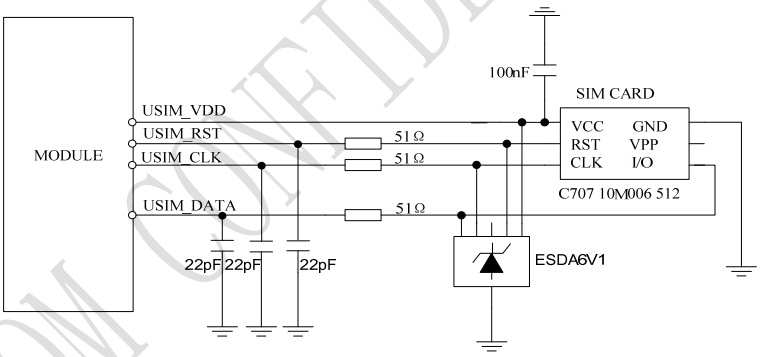

Figure 18: USIM interface reference circuit

Note: USIM_DATA has been pulled up with a100KΩ resistor to USIM_VDD in module. A 100nF capacitor on USIM_VDD is used to reduceinterference. For more details of AT commands about USIM, please refer to document [1].

3.5.2 SIM Card Design Guide

SIM card signal could be interferenced by some high frequency signal, it is strongly recommended to follow these guidelines while designing:

- SIM card holder should be far away from antenna
- SIM traces should keep away from RF lines, VBAT and high-speed signal lines

SIMCOM CONFIDENTIAL F

- The traces should be as short as possible
- Keep SIM card holder's GND connect to main ground directly
- Shielding the SIM card signal by ground well
- Recommended to place a 100nF capacitor on SIM_VDD line and keep close to the SIM card holder
- Add some TVS which parasitic capacitance should not exceed 50pF
- Add 51Ω resistor to (SIM_RST/SIM_CLK/SIM_DATA) signal could enhance ESD protection
- Add 22pF capacitor to (SIM_RST/SIM_CLK/SIM_DATA) signal to induce RF signal interference

3.5.3 Recommended USIM Card Holder

It is recommended to use the 6-pin USIM socket such as C707 10M006 512 produced by Amphenol. User can visit http://www.amphenol.com for more information about the holder.

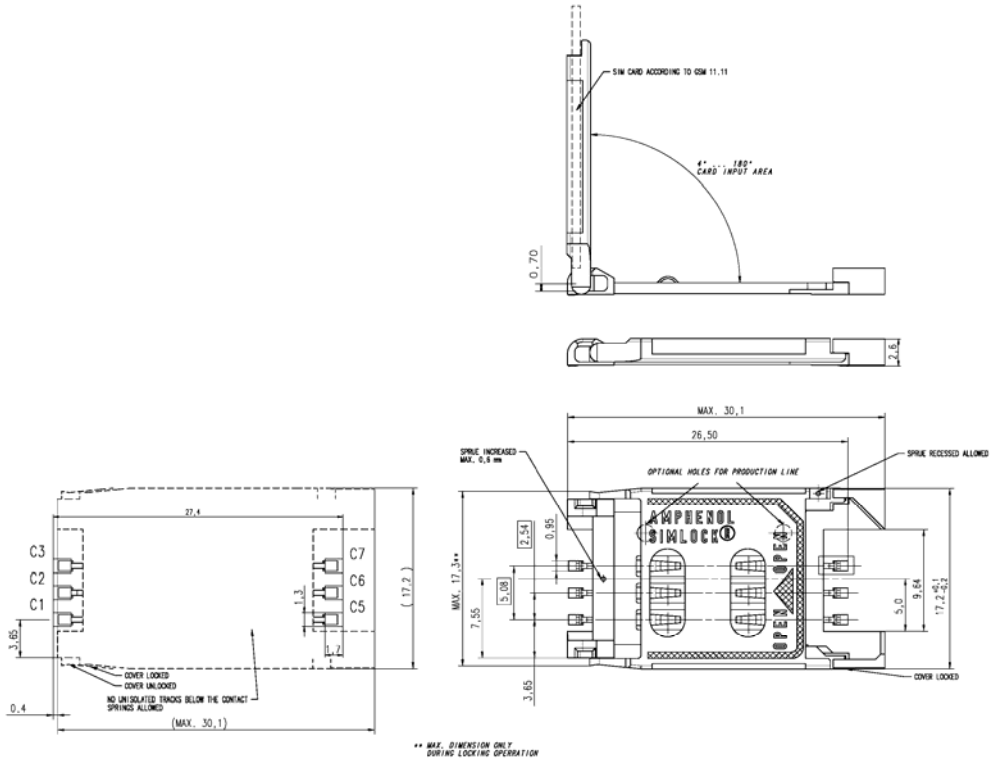

Figure 19: Amphenol SIM card socket

Table 13: Amphenol USIM Socket Pin Description

Pin	Signal	Description
C1	USIM_VDD	USIM Card Power supply.
C2	USIM_RST	USIM Card Reset.
C3	USIM_CLK	USIM Card Clock.
C5	GND	Connect to GND.
C6	VPP	
C7	USIM_DATA	USIM Card data I/O.

3.6 PCM Interface

Module provides a PCM interface for external codec, which can be used inmaster mode with short sync and 16 bits linear format.

Table 14: PCM Format

Characteristics	Specification
LineInterfaceFormat	Linear(Fixed)
Datalength	16bits(Fixed)
PCM Clock/Sync Source	Master Mode(Fixed)
PCMClockRate	2048 KHz (Fixed)
PCMSyncFormat	Shortsync(Fixed)
Data Ordering	MSB

Note: For more details about PCM AT commands, please refer to document [1].

3.6.1 PCM Timing

Module supports 2.048 MHz PCM data and sync timing for 16 bits linear format codec.

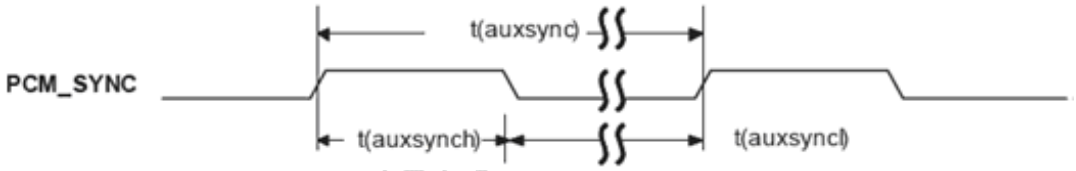

Figure 20: PCM_SYNC timing

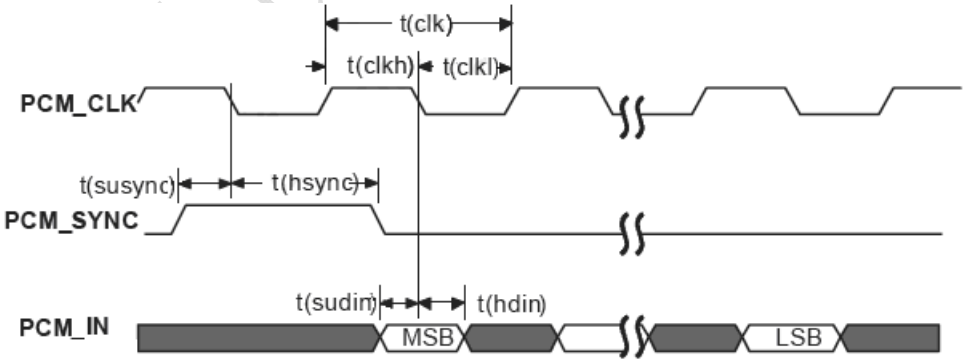

Figure 21: EXT codec to module timing

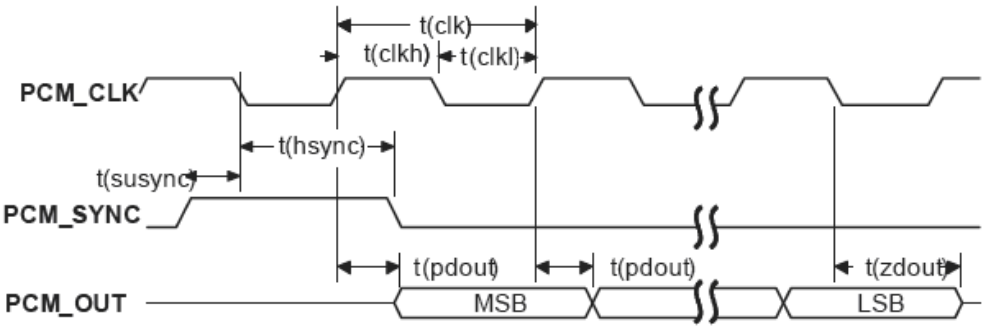

Figure 22: Module to EXT codec timing

Table 15: PCM Timing Parameters

Parameter	Description	Min.	Typ.	Max.	Unit
T(sync)	PCM_SYNC cycle time	–	125	–	µs
T(synch)	PCM_SYNC high level time	–	488	–	ns
T(syncl)	PCM_SYNC low level time	–	124.5	–	µs
T(clk)	PCM_CLK cycle time	–	488	–	ns
T(clkh)	PCM_CLK high level time	–	244	–	ns
T(clkl)	PCM_CLK low level time	–	244	–	ns
T(susync)	PCM_SYNC setup time high before falling edge of PCM_CLK	–	122	–	ns
T(hsync)	PCM_SYNC hold time after falling edge of PCM_CLK	–	366	–	ns
T(sudin)	PCM_IN setup time before falling edge of PCM_CLK	60	–	–	ns
T(hdin)	PCM_IN hold time after falling edge of PCM_CLK	60	–	–	ns
T(pdout)	Delay from PCM_CLK rising to PCM_OUT valid	–	–	60	ns
T(zdout)	Delay from PCM_CLK falling to PCM_OUT HIGH-Z	–	–	60	ns

3.6.2 PCM Application Guide

The following figure shows the external codec reference design.

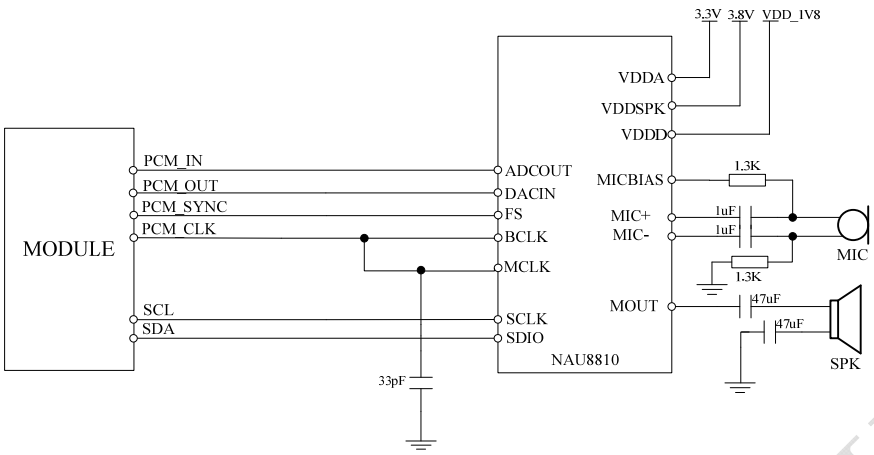

Figure 23: Audio codec reference circuit

Note: Module can transmit PCM data by theUSB portbesidesthe PCM interface. For more details please refer to documents [1] and [23].

3.7 I2C Interface

Module provides a I2C interface compatible with I2C specification, version 2.1, with clock rate up to 400 kbps. Its operation voltage is 1.8V.

3.7.1 I2C Design Guide

The following figure shows the I2C bus reference design.

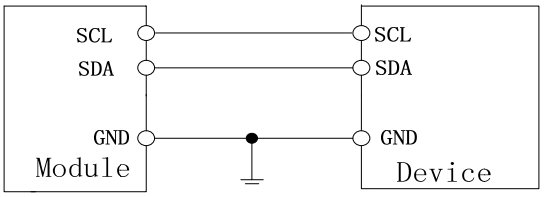

Figure 24: I2C reference circuit

Note：
SDA and SCLhave pull-up resistors in module. So, 2 external pull up resistors are not needed in application circuit.
"AT+CRIIC and AT+CWIIC" AT commands could be used to read/write register values of the I2C peripheral devices.For more details about AT commands please refer to document [1].

SIMCOM CONFIDENTIAL FILE

3.8 Network Status

The NETLIGHT pin is used to control Network Status LED, its reference circuit is shown in the following figure.

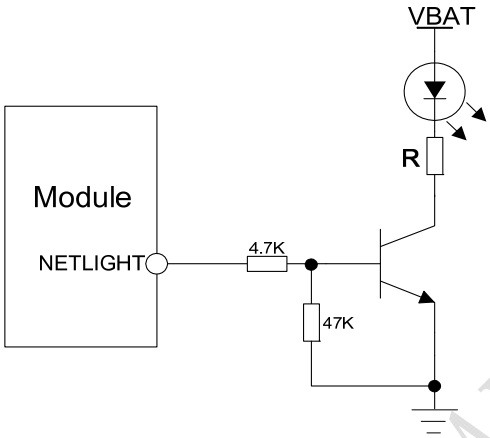

Figure 25: NETLIGHT reference circuit

Note: The value of the resistor named "R" depends on the LED characteristic.

Table 16: NETLIGHT pin status

NETLIGHT pin status	Module status
Always On	Searching Network/Call Connect
200ms ON, 200ms OFF	Data Transmit
800ms ON, 800ms OFF	Registered network
OFF	Power off / Sleep

Note: NETLIGHT output low level as "OFF", and high level as "ON".

3.9 Operating Status Indication

The pin50 is for operating status indication of the module. The pin output is high when module is powered on, and output is low when module is powered off.

Table 17: Pin definition of the STATUS

Pin name	Pin number	Description
STATUS	50	Operating status indication

Note: For timing about STATUS, please reference to the chapter "3.2 power on/down scenarios"

3.10 Pin Multiplex Function

Some pins of Module could be used for alternate function besides default function.

SIMCOM CONFIDENTIAL FILE

Table 18: Pin multiplex function list

Pin Number	Pin Name	Default Function	Alternate Function
4	SCL	SCL	GPIO11
5	SDA	SDA	GPIO10
12	USIM_DET	GPIO34	USIM_DET
18	PCM_CLK	PCM_CLK	GPIO23,SPI_CLK I2C_SCL
19	PCM_SYNC	PCM_SYNC	GPIO20,SPI_MOSI
20	PCM_IN	PCM_IN,	GPIO21,SPI_MISO
21	PCM_OUT	PCM_OUT	GPIO22,SPI_CS_N I2C_SDA

Note：For more details of AT commands about GPIO multiplex function,please refer to document [1].

3.11 Other interface

3.11.1 Sink Current Source

The ISINK pin is VBATtolerant and intended to drive some passive devices such as LCD backlight, white LED, etc. Its output current can be up to 40 mA and be set by the AT command “AT+ CLEDITST”.

Table 19: Sink current electronic characteristic

Symbol	Description	Min.	Typ.	Max.	Unit
V_{ISINK}	Voltage tolerant	0.5	-	VBAT	V
I_{ISINK}	Current tolerant	0	-	40	mA

ISINK is a ground-referenced current sink. The following figure shows its reference circuit.

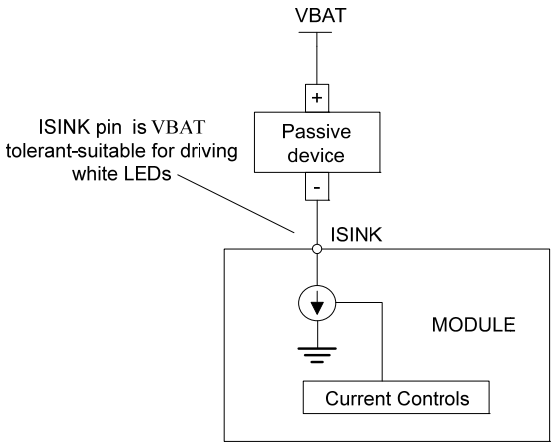

Figure 26: ISINK reference circuit

SIMCOM CONFIDENTIAL FILE

Note: The sinking current can be adjusted to meet the design requirement through the AT command "AT+ CLEDITST =<0>, <value>".The "value" ranges from 0 to 8, on behalf of the current from 0mA to 40mA by 5mA step.

3.11.2 ADC

Module has 1 dedicated ADC pins named ADC. They are available fordigitizing analog signals such as battery voltage and so on. These electronic specifications are shown in the following table.

Table 20: ADC Electronic Characteristics

Characteristics	Min.	Typ.	Max.	Unit
Resolution	–	15	–	Bits
Input Range	0.1		1.7	V
Input serial resistance	1	–	–	MΩ

Note: "AT+CADC" can be used to read the voltage of the ADC pins, for more details, please refer to document [1].

SIMCOM CONFIDENTIAL FILE

4 RF Specifications

4.1 WCDMA/LTE RF Specifications

Table 21: Conducted transmission power

Frequency	Power	Min.
WCDMA B2	24dBm +1/-3dB	<-50dBm
WCDMA B5	24dBm +1/-3dB	<-50dBm
LTE-FDD B2	23dBm +/-2.7dB	<-40dBm
LTE-FDD B4	23dBm +/-2.7dB	<-40dBm
LTE-FDD B12	23dBm +/-2.7dB	<-40dBm

Table 22: Operating frequencies

Frequency	Receiving	Transmission
WCDMA B2	1930~1990 MHz	1850~1910 MHz
WCDMA B5	869~894 MHz	824~849 MHz
LTE-FDD B2	1930 ~1990 MHz	1850 ~1910 MHz
LTE-FDD B4	2110~2155 MHz	1710 ~1755 MHz
LTE-FDD B12	729~746 MHz	699 ~716 MHz

Table 23: Conducted receive sensitivity

Frequency	Receive sensitivity(Typical)	Receive sensitivity(MAX)
WCDMA B2	< -110dBm	3GPP
WCDMA B5	< -110dBm	3GPP
LTE	See table 24	3GPP

Table 24: Reference sensitivity (QPSK)

E-UTRA band	3GPP standard				Test value	3GPP standard		Duplex
	1.4 MHz	3MHz	5MHz	10MHz	10 MHz	15 MHz	20 MHz	
2	-102.7	-99.7	-98	-95	-101	-93.2	-92	FDD
4	-104.7	-101.7	-100	-97	-102	-95.2	-94	FDD
12	-101.7	-98.7	-97	-94	-101.5			FDD

4.2 WCDMA/LTE Antenna Design Guide

Users should connect antennas to Module's antenna pads through the micro-strip line or other types of RF trace. The trace impedance must be controlled in 50Ω. SIMCom recommends that the total insertion loss between Module and antenna should meet the following requirements:

Table 25: Trace Loss

Frequency	Loss
700MHz-960MHz	<0.5dB
1710MHz-2170MHz	<0.9dB
2300MHz-2650MHz	<1.2dB

To facilitate the antenna tuning and certification test, a RF connector and an antenna matching circuit should be added. The following figure is the recommended circuit.

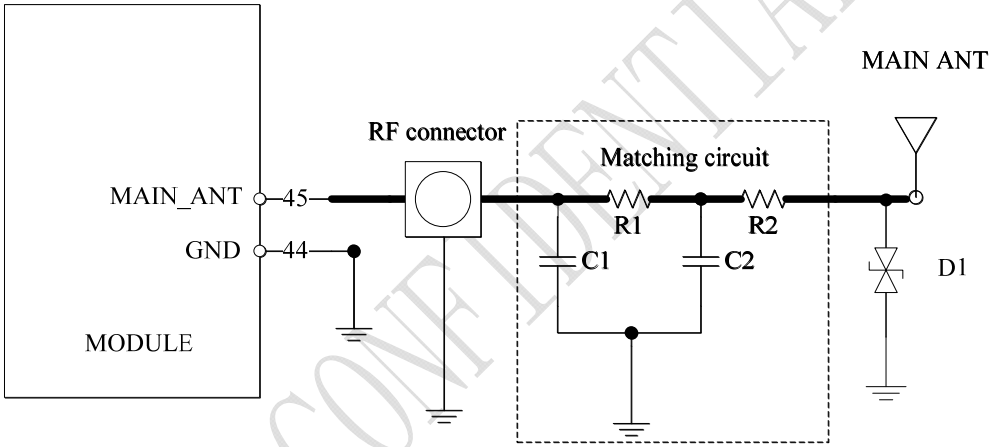

Figure 27: Antenna matching circuit (MAIN_ANT)

In above figure, the components R1,C1,C2 and R2 are used for antenna matching, the value of components can only be achieved after the antenna tuning and usually provided by antenna vendor. By default, the R1, R2 are 0Ω resistors, and the C1, C2 are reserved for tuning. The component D1 is a TVS for ESD protection, and it is optional for users according to application environment.
The RF test connector is used for the conducted RF performance test, and should be placed as close as to the module's MAIN_ANT pin. The traces impedance between Module and antenna must be controlled in 50Ω.

SIMCOM CONFIDENTIAL FILE

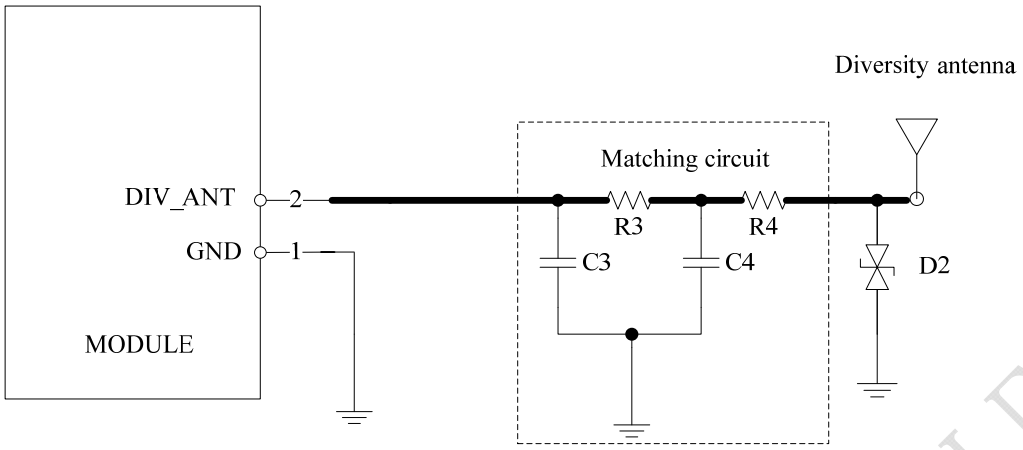

Figure 28: Antenna matching circuit (DIV_ANT)

In above figure, R3, C3, C4 and R4 are used for auxiliary antenna matching. By default, the R3, R4 are 0Ωresistors, and the C3, C4 are reserved for tuning. D2 is a TVS for ESD protection, and it is optional for users according to application environment.
Two TVS are recommended in the table below.

Table 26: Recommended TVS

Package	Part Number	Vender
0201	LXES03AAA1-154	Murata
0402	LXES15AAA1-153	Murata

Note：SIMCom suggests the LTE auxiliary antenna to be kept on, since there are many high bands in the designing of FDD-LTE. Because of the high insert loss of the RF cable and layout lines, the receiver sensitivity of these bands above will have risk to meet the authentication without the diversity antenna.For more details about auxiliary antenna design notice,please refer to document [25]

To facilitate the antenna tuning and certification test, a RF connector and an antenna matching circuit should be added. The following figure is the recommended circuit.
circuit should be added. The following figure is the recommended circuit.

SIMCOM CONFIDENTIAL FILE

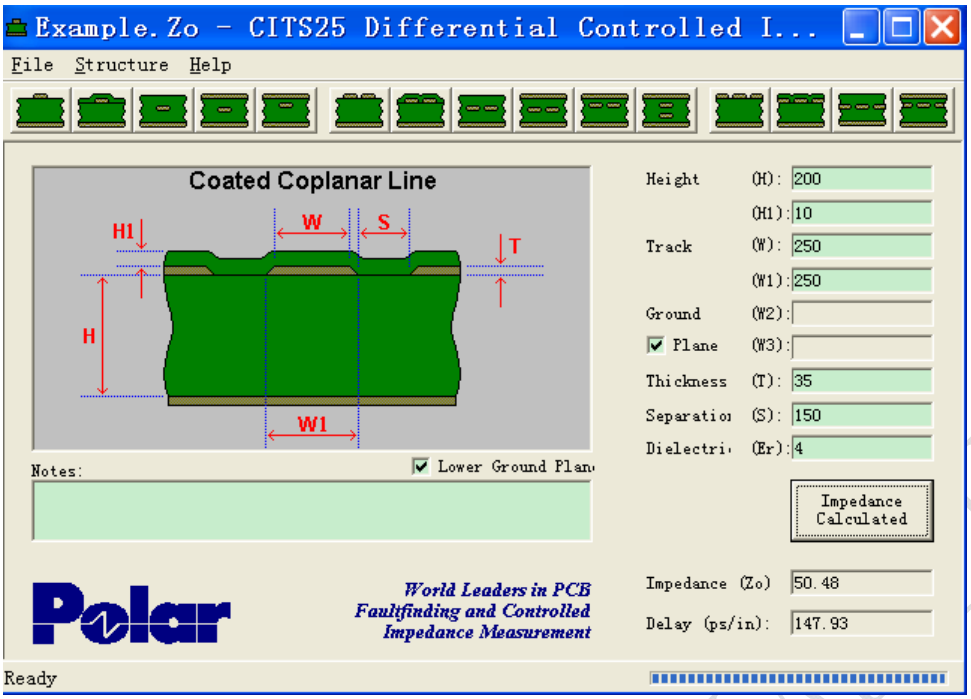
Example.Zo - CITS25 Differential Controlled I...
File Structure Help
Coated Coplanar Line
H1
W
S
T
H
W1
Notes:
Lower Ground Plan
Height (H): 200
(H1): 10
Track (W): 250
(W1): 250
Ground (W2):
Plane (W3):
Thickness (T): 35
Separatio (S): 150
Dielectri (Er): 4
Impedance Calculated
Impedance (Zo) 50.48
Delay (ps/in): 147.93
Polar
World Leaders in PCB Faultfinding and Controlled Impedance Measurement
Ready

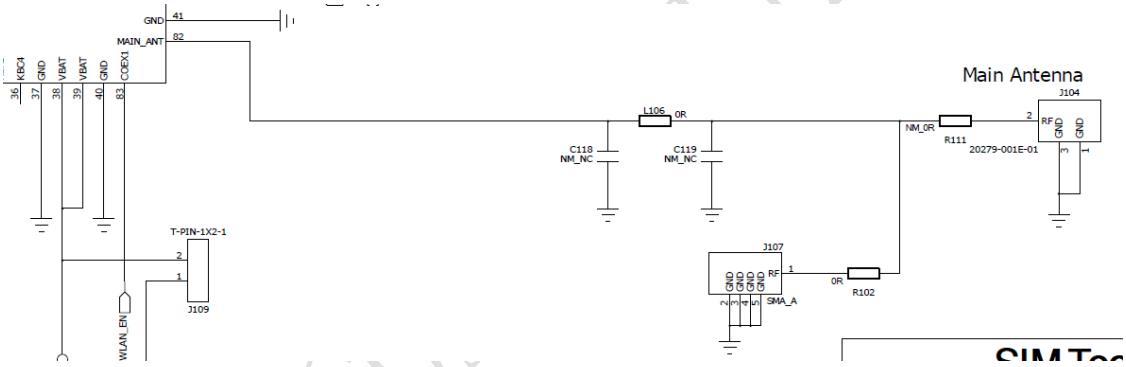
Main Antenna
GND
MAIN_ANT
L106
C118
NM_NC
C119
NM_NC
NM_0R
R111
20279-001E-01
J104
T-PIN-1X2-1
J109
J107
SMA_A
R102
WLAN_EN

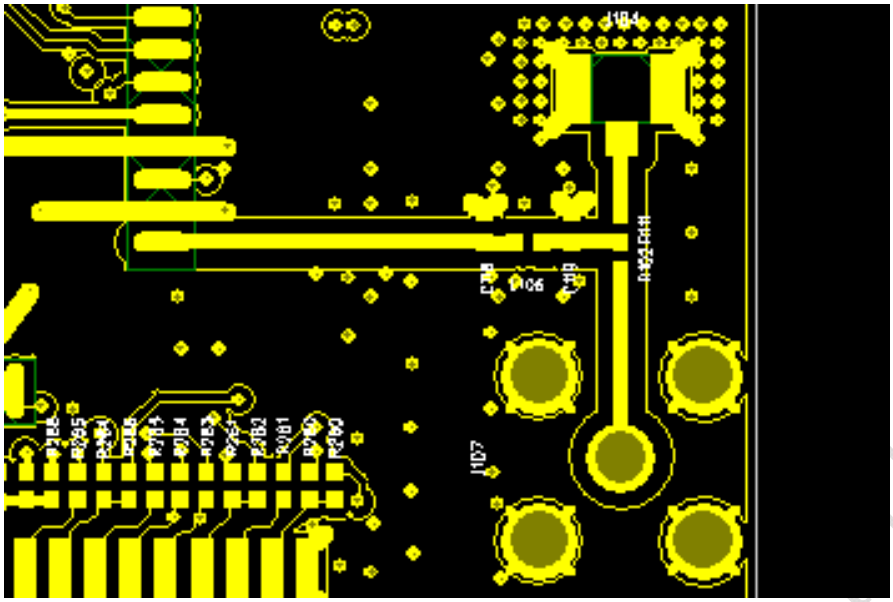

Figure 29: Antenna matching circuit (MAIN_ANT)

In figure 29, the components L106, C118, C119 and R111 or R102 are used for antenna matching, the values of components can only be achieved after the antenna tuning and usually provided by antenna vendor. By default, the L106,R111or R102 are 0Ω resistors, and the C118, C119 are reserved for tuning are reserved for tuning. The RF test connector is used for the conducted RF performance test, and should be placed as close as to the module's MAIN_ANT pin. The traces impedance between module and antenna must be controlled in 50Ω.

4.3 GNSS

SIM7600A merges GNSS satellite and network information to provide a high-availability solution that offers industry-leading accuracy and performance. This solution performs well, even in very challenging environmental conditions where conventional GNSS receivers fail, and provides a platform to enable wireless operators to address both location-based services and emergency mandates.

4.3.1 GNSS Technical specification

- Tracking sensitivity: -159 dBm（GPS）/-158 dBm（GLONASS）
- Cold-start sensitivity: -148 dBm
- Accuracy (Open Sky): 2.5m (CEP50)
- TTFF (Open Sky) : Hot start <1s, Cold start<35s
- Receiver Type: 16-channel, C/A Code
- GPS L1 Frequency: 1575.42±1.023MHz
- GLONASS: 1597.5~1605.8 MHz
- Update rate: Default 1 Hz

SIMCOM CONFIDENTIAL FILE

- GNSS data format: NMEA-0183
- GNSS Current consumption : 100mA ((WCDMA/LTE Sleep ,in total on VBAT pins)
- GNSS antenna: Passive/Active antenna

Note: If the antenna is active type, the power should be given by main board, because there is no power supply on GPS antenna pad. If the antenna is passive, it is suggested that the external LNA should be used.

4.3.2 GNSS Application Guide

Users can adopt an active antenna or a passive antenna as GNSS signal transceiver. In this document, all GNSS specification mentioned is from passive antenna. The following is the reference circuit.

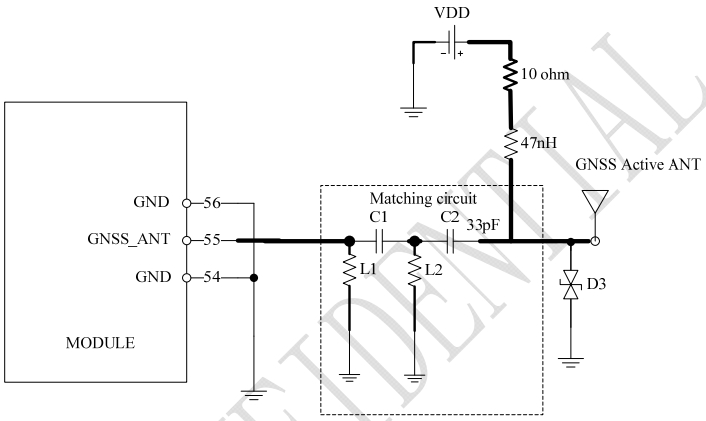

Figure 30: Active antenna circuit

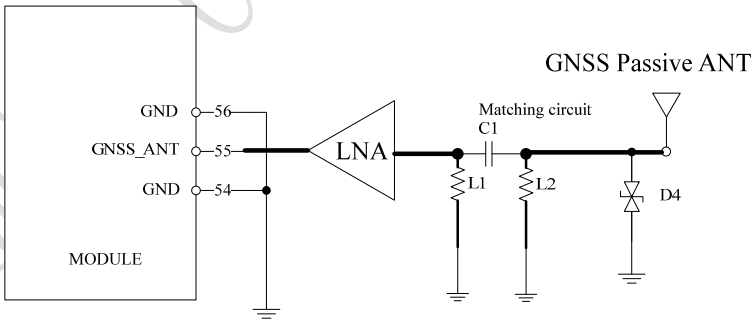

Figure 31: Passive antenna circuit (Default)

In above figures, the components C1 and L1, L2 are used for antenna matching, the values of the components can only be obtained after the antenna tuning and usually provided by antenna vendor. C2 in Figure 29 is used for DC blocking. L3 is the matching component of the external LNA, and the value of L3 is determined by the LNA characteristic and PCB layout. Both VDD of active antenna and V_LNA need external power supplies which should be considered according to active antenna and LNA characteristic. LDO/DCDC is recommended to get lower current consuming by shutting down active antennas and LNA when GNSS is not working.

SIMCOM CONFIDENTIAL FILE

LNA should apply the following requirements as table 28. LNA is also suggested to put near the passive antenna.

Table 27: LNA requirements

Parameter	Min	Max	Unit
Vdd	1.5	3.3	V
Idd		3	mA
LNA_EN	1.3		V
Gain	14	17	dB
VSWR		2	

GNSS can be used by NMEA port. User can select NMEA as output through UART or USB. NMEA sentences are automatic and no command is provided. NMEA sentences include GSV, GGA, RMC, GSA, and VTG. Before using GNSS, user should configure SIM7600A in proper operating mode by AT command. Please refer to related document for details. SIM7600A can also get position location information through AT directly.

Note: GNSS is closed by default, it could be started by AT+CGPS. The AT command has two parameters, the first is on/off, and the second is GNSS mode. Default mode is standalone mode. AGPS mode needs more support from the mobile telecommunication network. Please refer to document [24] for more details.

SIMCOM CONFIDENTIAL FILE

5 Electrical Specifications

5.1 Absolute Maximum Ratings

Absolute maximumrating for digital and analog pins of Module are listed in the following table:

Table 28: Absolute maximum ratings

Parameter	Min.	Max.	Unit
Voltage at VBAT	-0.5	6.0	V
Voltage at VBUS	-0.5	6.3	V
Voltage at digital pins (RESET,SPI,GPIO,I2C,UART,PCM)	-0.3	2.1	V
Voltage at digital pins :USIM	-0.3	3.05	V
Voltage at PWRKEY	-0.3	1.8	

5.2 Operating Conditions

Table 29: Recommended operating ratings

Parameter	Min.	Typ.	Max.	Unit
Voltage at VBAT	3.4	3.8	4.2	V
Voltage at VBUS	3.6	5	5.25	V

Table 30: 1.8V Digital I/O characteristics*

Parameter	Description	Min.	Typ.	Max.	Unit
V_{IH}	High-level input voltage	1.17	1.8	2.1	V
V_{IL}	Low-level input voltage	-0.3	0	0.63	V
V_{OH}	High-level output voltage	1.35	-	1.8	V
V_{OL}	Low-level output voltage	0	-	0.45	V
I_{OH}	High-level output current(no pull down resistor)	-	2		mA
I_{OL}	Low-level output current(no pull up resistor)	-	-2	-	mA
I_{IH}	Input high leakage current (no pull down resistor)	-	-	1	uA
I_{IL}	Input low leakage current(no pull up resistor)	-1	-	-	uA

Note: These parameters are for digital interface pins, such as SPI, GPIOs (NETLIGHT), I2C, UART, PCM.

The operating temperature of Module is listed in the following table.

Table 31: Operating temperature

Parameter	Min.	Typ.	Max.	Unit
Normal operation temperature	-30	25	80	℃
Extended operation temperature*	-40	25	85	℃
Storage temperature	-45	25	+90	℃

Note: Module is able to make and receive voice calls, data calls, SMS and make WCDMA/HSPA+/LTE traffic in -40℃ ~ +85℃. The performance will be reduced slightly from the 3GPP specifications if the temperature is outside the normal operating temperature range and still within the extreme operating temperature range.

5.3 Operating Mode

5.3.1 Operating Mode Definition

The table belowsummarizes the various operating modes of Module series products.

Table 32: Operating mode Definitions

Mode		Function
Normal operation	GSM/WCDMA / LTE Sleep	In this case, the current consumption of module will be reduced to the minimal level and the module can still receive paging message and SMS.
	GSM/WCDMA / LTE Idle	Software is active. Module is registered to the network, and the module is ready to communicate.
	GSM/WCDMA / LTE Talk	Connection between two subscribers is in progress. In this case, the power consumption depends on network settings such as DTX off/on, FR/EFR/HR, hopping sequences, antenna.
	GSM/WCDMA/LTE Standby	Module is ready for data transmission, but no data is currently sent or received. In this case, power consumption depends on network settings.
	GPRS/EDGE/WCDMA / LTE transmission	There is data transmission in progress. In this case, power consumption is related to network settings (e.g. power control level); uplink/downlink data rates, etc.
Minimum functionality mode		AT command “AT+CFUN=0” can be used to set the module to a minimum functionality mode without removing the power supply. In this mode, the RF part of the module will not work and the USIM card will not be accessible, but the serial port and USB port are still accessible. The power consumption in this mode is lower than normal mode.
Flight mode		AT command “AT+CFUN=4” or pulling down the FLIGHTMODE pin can be used to set the module to flight mode without removing the

	power supply. In this mode, the RF part of the module will not work but the serial port and USB port are still accessible. The power consumption in this mode is lower than normal mode.
Power off	Module will go into power off mode by sending the AT command "AT+CPOF" or by pulling down the PWRKEY pin normally. In this mode the power management unit shuts down the power supply and software is not active. The serial port and USB are is not accessible.

5.3.2 Sleep Mode

In sleep mode, the current consumption of module will be reduced to the minimal level, and module can still receive paging message and SMS.
Several hardware and software conditions must be satisfied together in order to let Module enter into sleep mode:
1. UART condition
2. USB condition
3. Software condition
Note: Before designing, pay attention to how to realize sleeping/waking function and refer to Document [26] for more details.

5.3.3 Minimum Functionality Mode and Flight Mode

Minimum functionality mode ceasesa majority functionof module, thus minimizing the power consumption. This mode is set by the AT command which provides a choice of the functionality levels.
- AT+CFUN=0: Minimum functionality
- AT+CFUN=1: Full functionality (Default)
- AT+CFUN=4: Flight mode

If Module has been set to minimum functionality mode, the RF function and USIM card function will be closed. In this case, the serial port and USB are still accessible, but RF function and USIM card will be unavailable.
If Module has been set to flight mode, the RF function will be closed. In this case, the serial port and USB are still accessible, but RF function will be unavailable.
When Module is in minimum functionality or flight mode, it can return to full functionality by the AT command "AT+CFUN=1".

5.4 Current Consumption

The current consumption is listed in the table below.

SIMCOM CONFIDENTIAL FILE

Table 33: Current consumption on VBAT Pins (VBAT=3.8V)

UMTS Sleep/Idle Mode	
WCDMA supply current (without USB connection)	Sleep mode @DRX=9Typical: 1.11 Idle mode @DRX=9Typical: 17.5
LTE Sleep/Idle mode	
LTE supply current (without USB connection)	Sleep mode Typical: 1.56 Idle mode Typical: 22
UMTS Talk	
WCDMA B2	@Power 22dBm Typical: 524mA
WCDMA B5	@Power 23.48dBm Typical: 480mA
HSDPA Data	
WCDMA B2	@Power 24dBm Typical: TBD
WCDMA B5	@Power 24dBm Typical: TBD
LTE Data	
LTE-FDD B2	@5 MHz 22.2dBm Typical: 589mA @10 MHz 22.7dBm Typical: 577mA @20 MHz 22.38dBm Typical: 626mA
LTE-FDD B4	@5 MHz 23.05dBm Typical: 519mA @10 MHz 23.04dBm Typical: 556mA @20 MHz 22.83dBm Typical: 600mA
LTE-FDD B12	@5 MHz 22.69dBm Typical: 516mA @10 MHz 22.9dBm Typical: 512mA

5.5 ESD Notes

Module is sensitive to ESD in the process of storage, transporting and assembling. Especially, Module is mounted on the users' mother board, The ESD components should be placed beside the connectors which human body might touch, such as USIM card holder, audio jacks, switches and keys, etc. The following table shows the Module ESD measurement performance without any external ESD component.

Table 34: The ESD performance measurement table (Temperature: 25℃, Humidity: 45%)

Part	Contact discharge	Air discharge
GND	+/-6K	+/-12K
VBAT	+/-5K	+/-10K
Antenna port	+/-5K	+/-10K
USB	+/-4K	+/-8K
UART	+/-4K	+/-8K
PCM	+/-4K	+/-8K
Other PADs	+/-3K	+/-6K

6 SMT Production Guide

6.1 Top and Bottom View of Module

Figure 32: Top and bottom view of Module

6.2 Typical SMT Reflow Profile

SIMCom provides a typical soldering profile. Therefore the soldering profile shown below is only a generic recommendation and should be adjusted to the specific application and manufacturing constraints.

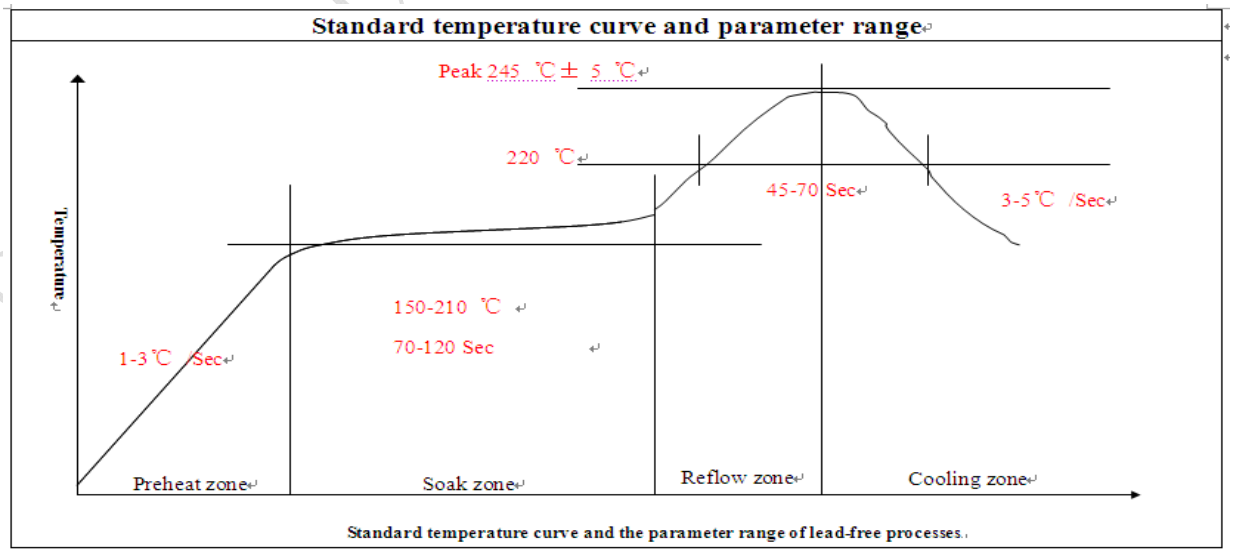

Figure 33: The ramp-soak-spike Reflow Profile of Module

Note: For more details about secondary SMT, please refer to the document [21].

6.3 Moisture Sensitivity Level (MSL)

Module is qualified to Moisture Sensitivity Level (MSL) 3 in accordance with JEDEC J-STD-033. If the prescribed time limit is exceeded, users should bake modules for 192 hours in drying equipment (<5% RH) at 40+5/-0°C, or 72 hours at 85+5/-5°C. Note that plastic tray is not heat-resistant, and only can be baked at 45° C.

Table 35: Moisture Sensitivity Level and Floor Life

Moisture Sensitivity Level (MSL)	Floor Life (out of bag) at factory ambient≤30°C/60% RH or as stated
1	Unlimited at ≦30℃/85% RH
2	1 year
2a	4 weeks
3	168 hours
4	72 hours
5	48 hours
5a	24 hours
6	Mandatory bake before use. After bake, it must be reflowed within the time limit specified on the label.

NOTE: IPC / JEDEC J-STD-033 standard must be followed for production and storage.

6.4 Stencil Foil Design Recommendation

The recommended thickness of stencil foil is more than 0.1mm.

SIMCOM CONFIDENTIAL

7 Packaging

Module module support tray packaging.

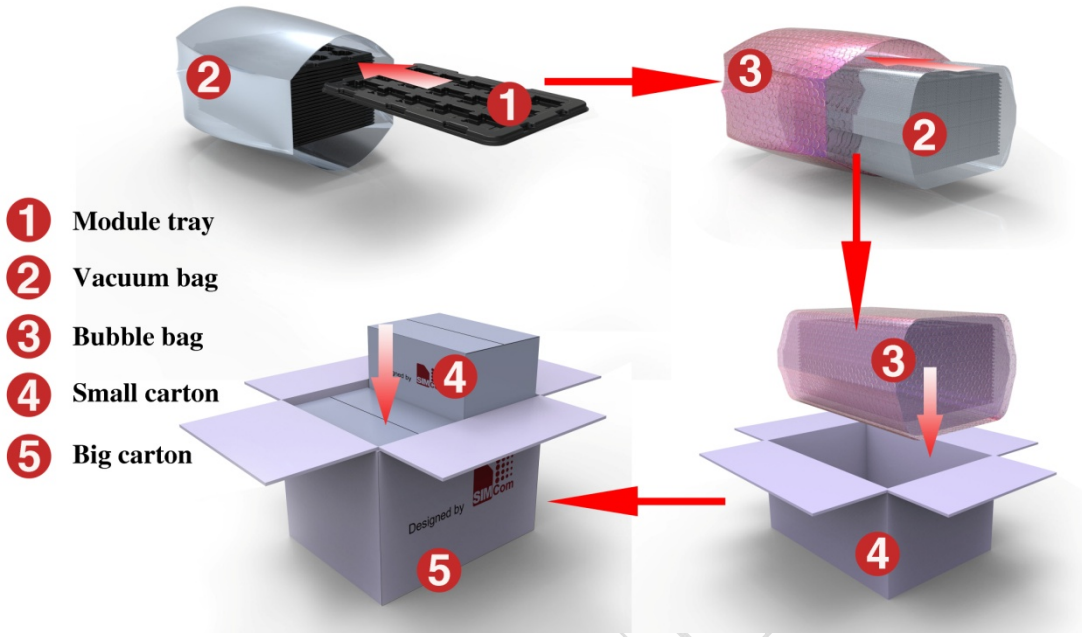

Figure 34: Packaging introduce

Module tray drawing：

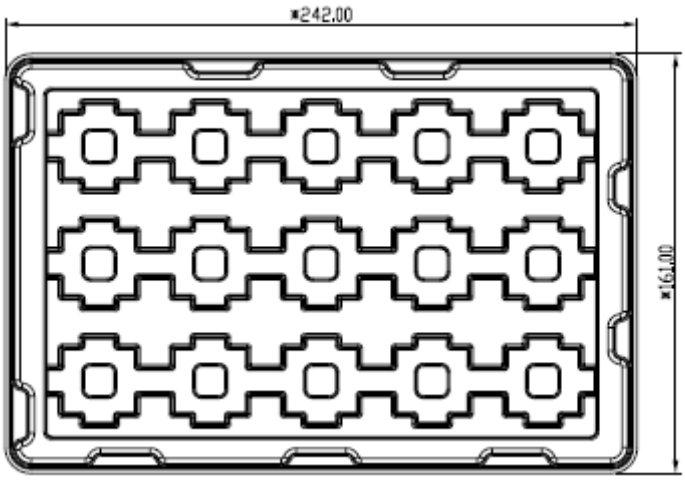

Figure 35: Module tray drawing introduce

Table 36: Tray size

Length（±3mm）	Width（±3mm）	Module number
242.0	161.0	15

Small carton drawing：

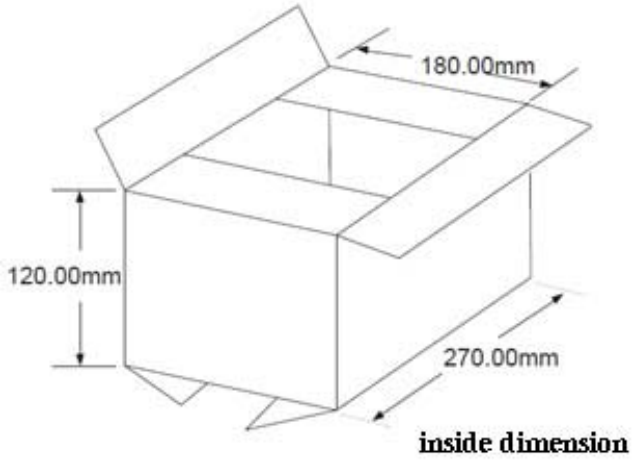

Figure 36: Small carton drawing introduce

Table 37: Small Carton size

Length（±10mm）	Width（±10mm）	Height（±10mm）	Module number
270	180	120	15*20=300

Big carton drawing：

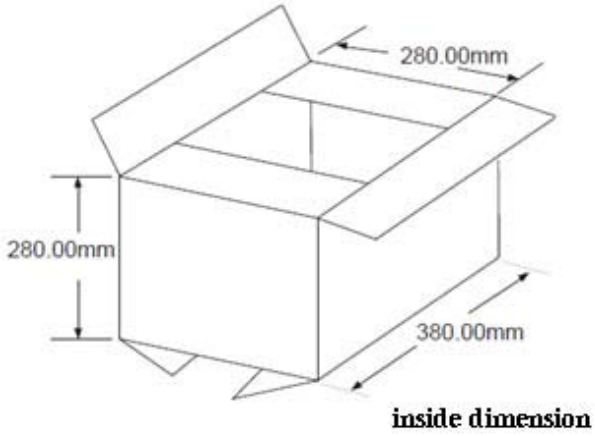

Figure 37: Big carton drawing introduce

Table 38: Big carton size

Length（±10mm）	Width（±10mm）	Height（±10mm）	Module number
380	280	280	300*4=1200

SIMCOM CONFIDENTIAL FILE

Appendix

A. Reference Design

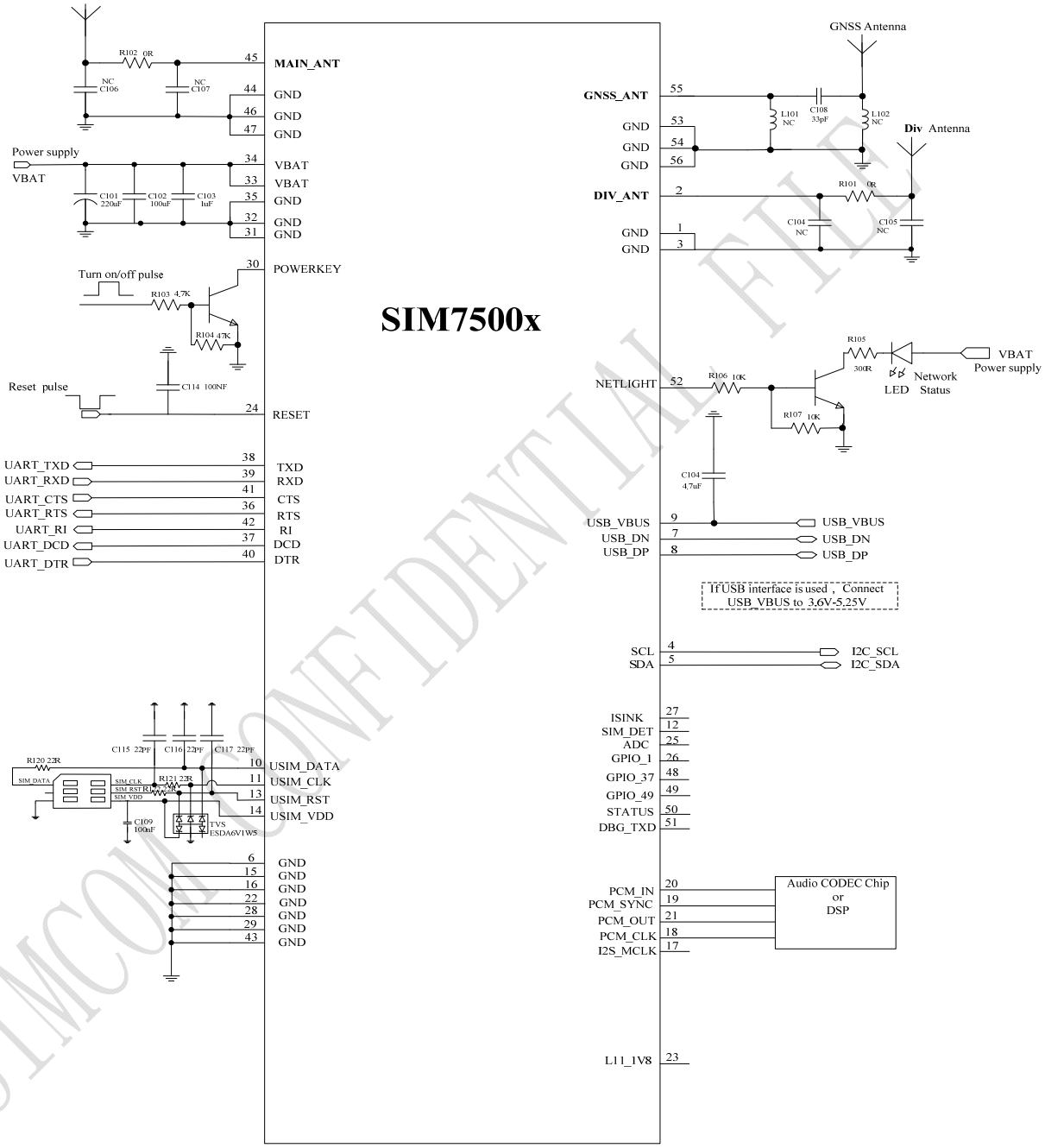

SIMCOM CONFIDENTIAL FILE

Figure 38: Reference design

Note: The UART port suggest to be used by isolated circuit .

B. Coding Schemes and Maximum Net Data Rates over Air Interface

Table 39: Coding schemes and maximum net data rates over air interface

Multislot definition(GPRS/EDGE)			
Slot class	**DL slot number**	**UL slot number**	**Active slot number**
1	1	1	2
2	2	1	3
3	2	2	3
4	3	1	4
5	2	2	4
6	3	2	4
7	3	3	4
8	4	1	5
9	3	2	5
10	4	2	5
11	4	3	5
12	4	4	5
GPRS coding scheme	**Max data rata（4 slots）**		**Modulation type**
CS 1 = 9.05 kb/s / time slot	36.2 kb/s		GMSK
CS 2 = 13.4 kb/s / time slot	53.6 kb/s		GMSK
CS 3 = 15.6 kb/s / time slot	62.4 kb/s		GMSK
CS 4 = 21.4 kb/s / time slot	85.6 kb/s		GMSK
EDGE coding scheme	**Max data rata（4 slots）**		**Modulation type**
MCS 1 = 8.8 kb/s/ time slot	35.2 kb/s		GMSK
MCS 2 = 11.2 kb/s/ time slot	44.8 kb/s		GMSK
MCS 3 = 14.8 kb/s/ time slot	59.2 kb/s		GMSK
MCS 4 = 17.6 kb/s/ time slot	70.4 kb/s		GMSK
MCS 5 = 22.4 kb/s/ time slot	89.6 kb/s		8PSK
MCS 6 = 29.6 kb/s/ time slot	118.4 kb/s		8PSK
MCS 7 = 44.8 kb/s/ time slot	179.2 kb/s		8PSK
MCS 8 = 54.4 kb/s/ time slot	217.6 kb/s		8PSK
MCS 9 = 59.2 kb/s/ time slot	236.8 kb/s		8PSK
HSDPA device category	**Max data rate（peak）**		**Modulation type**
Category 1	1.2Mbps		16QAM,QPSK
Category 2	1.2Mbps		16QAM,QPSK
Category 3	1.8Mbps		16QAM,QPSK
Category 4	1.8Mbps		16QAM,QPSK
Category 5	3.6Mbps		16QAM,QPSK
Category 6	3.6Mbps		16QAM,QPSK
Category 7	7.2Mbps		16QAM,QPSK
Category 8	7.2Mbps		16QAM,QPSK

Category 9	10.2Mbps	16QAM,QPSK
Category 10	14.4Mbps	16QAM,QPSK
Category 11	0.9Mbps	QPSK
Category 12	1.8Mbps	QPSK
Category 13	17.6Mbps	64QAM
Category 14	21.1Mbps	64QAM
Category 15	23.4Mbps	16QAM
Category 16	28Mbps	16QAM
Category 17	23.4Mbps	64QAM
Category 18	28Mbps	64QAM
Category 19	35.5Mbps	64QAM
Category 20	42Mbps	64QAM
Category 21	23.4Mbps	16QAM
Category 22	28Mbps	16QAM
Category 23	35.5Mbps	64QAM
Category 24	42.2Mbps	64QAM
HSUPA device category	**Max data rate（peak）**	**Modulation type**
Category 1	0.96Mbps	QPSK
Category 2	1.92Mbps	QPSK
Category 3	1.92Mbps	QPSK
Category 4	3.84Mbps	QPSK
Category 5	3.84Mbps	QPSK
Category 6	5.76Mbps	QPSK
LTE-FDD device category (Downlink)	**Max data rate（peak）**	**Modulation type**
Category 1	10Mbps	QPSK/16QAM/64QAM
Category 2	50Mbps	QPSK/16QAM/64QAM
Category 3	100Mbps	QPSK/16QAM/64QAM
Category 4	150Mbps	QPSK/16QAM/64QAM
LTE-FDD device category (Uplink)	**Max data rate（peak）**	**Modulation type**
Category 1	5Mbps	QPSK/16QAM
Category 2	25Mbps	QPSK/16QAM
Category 3	50Mbps	QPSK/16QAM
Category 4	50Mbps	QPSK/16QAM

C. Related Documents

Table 40: Related documents

SN	Title	Description
[1]	SIM7X00 Series_AT Command Manual_V1.xx	SIM7X00 Series_AT Command Manual
[2]	ITU-T Draft new recommendationV.25ter	Serial asynchronous automatic dialing and control
[3]	GSM 07.07	Digital cellular telecommunications (Phase 2+); AT command set for GSM Mobile Equipment (ME)
[4]	GSM 07.10	Support GSM 07.10 multiplexing protocol
[5]	GSM 07.05	Digital cellular telecommunications (Phase 2+); Use of Data Terminal Equipment – Data Circuit terminating Equipment (DTE – DCE) interface for Short Message Service (SMS) and Cell Broadcast Service (CBS)
[6]	GSM 11.14	Digital cellular telecommunications system (Phase 2+); Specification of the SIM Application Toolkit for the Subscriber Identity Module – Mobile Equipment (SIM – ME) interface
[7]	GSM 11.11	Digital cellular telecommunications system (Phase 2+); Specification of the Subscriber Identity Module – Mobile Equipment (SIM – ME) interface
[8]	GSM 03.38	Digital cellular telecommunications system (Phase 2+); Alphabets and language-specific information
[9]	GSM 11.10	Digital cellular telecommunications system (Phase 2)；Mobile Station (MS) conformance specification； Part 1: Conformance specification
[10]	3GPP TS 51.010-1	Digital cellular telecommunications system (Release 5); Mobile Station (MS) conformance specification
[11]	3GPP TS 34.124	Electromagnetic Compatibility (EMC) for mobile terminals and ancillary equipment.
[12]	3GPP TS 34.121	Electromagnetic Compatibility (EMC) for mobile terminals and ancillary equipment.
[13]	3GPP TS 34.123-1	Technical Specification Group Radio Access Network; Terminal conformance specification; Radio transmission and reception (FDD)
[14]	3GPP TS 34.123-3	User Equipment (UE) conformance specification; Part 3: Abstract Test Suites.
[15]	EN 301 908-02 V2.2.1	Electromagnetic compatibility and Radio spectrum Matters (ERM); Base Stations (BS) and User Equipment (UE) for IMT-2000. Third Generation cellular networks; Part 2: Harmonized EN for IMT-2000, CDMA Direct Spread (UTRA FDD) (UE) covering essential requirements of article 3.2 of the R&TTE Directive
[16]	EN 301 489-24 V1.2.1	Electromagnetic compatibility and Radio Spectrum Matters (ERM); Electromagnetic Compatibility (EMC) standard for radio equipment and services; Part 24: Specific conditions for IMT-2000 CDMA Direct Spread (UTRA) for Mobile and portable (UE) radio and ancillary equipment
[17]	IEC/EN60950-1(2001)	Safety of information technology equipment (2000)
[18]	3GPP TS 51.010-1	Digital cellular telecommunications system (Release 5); Mobile Station (MS) conformance specification

[19]	GCF-CC V3.23.1	Global Certification Forum - Certification Criteria
[20]	2002/95/EC	Directive of the European Parliament and of the Council of 27 January 2003 on the restriction of the use of certain hazardous substances in electrical and electronic equipment (RoHS)
[21]	Module secondary-SMT-UGD-V1.xx	Module secondary SMT Guidelines
[22]	SIM7X00 Series_UART_Application Note_V1.xx	SIM7X00 Series_UART_Application Note
[23]	SIM7X00 Series_USB AUDIO_Application Note_V1.xx	SIM7X00 Series_USB AUDIO_Application Note
[24]	Antenna design guidelines for diversity receiver system	Antenna design guidelines for diversity receiver system
[25]	SIM7X00 Series_Sleep Mode_ Application Note_V1.xx	SIM7X00 Series_Sleep Mode_ Application Note

SIMCOM CONFIDENTIAL

D. Terms and Abbreviations

Table 41: Terms and Abbreviations

Abbreviation	Description
ADC	Analog-to-Digital Converter
ARP	Antenna Reference Point
BER	Bit Error Rate
BTS	Base Transceiver Station
CS	Coding Scheme
CSD	Circuit Switched Data
CTS	Clear to Send
DAC	Digital-to-Analog Converter
DRX	Discontinuous Reception
DSP	Digital Signal Processor
DTE	Data Terminal Equipment (typically computer, terminal, printer)
DTR	Data Terminal Ready
DTX	Discontinuous Transmission
EFR	Enhanced Full Rate
EGSM	Enhanced GSM
EMC	Electromagnetic Compatibility
ESD	Electrostatic Discharge
ETS	European Telecommunication Standard
EVDO	Evolution Data Only
FCC	Federal Communications Commission (U.S.)
FD	SIM fix dialing phonebook
FDMA	Frequency Division Multiple Access
FR	Full Rate
GMSK	Gaussian Minimum Shift Keying
GPRS	General Packet Radio Service
GSM	Global Standard for Mobile Communications
GNSS	Global Navigation Satellite System
HR	Half Rate
HSPA	High Speed Packet Access
I2C	Inter-Integrated Circuit
IMEI	International Mobile Equipment Identity
LTE	Long Term Evolution
MO	Mobile Originated
MS	Mobile Station (GSM engine), also referred to as TE
MT	Mobile Terminated
PAP	Password Authentication Protocol
PBCCH	Packet Switched Broadcast Control Channel
PCB	Printed Circuit Board
PCS	Personal Communication System, also referred to as GSM 1900
RF	Radio Frequency
RMS	Root Mean Square (value)
RTC	Real Time Clock
SIM	Subscriber Identification Module

SMS	Short Message Service
SPI	serial peripheral interface
SMPS	Switched-mode power supply
TDMA	Time Division Multiple Access
TE	Terminal Equipment, also referred to as DTE
TX	Transmit Direction
UART	Universal Asynchronous Receiver & Transmitter
VSWR	Voltage Standing Wave Ratio
SM	SIM phonebook
NC	Not connect
EDGE	Enhanced data rates for GSM evolution
HSDPA	High Speed Downlink Packet Access
HSUPA	High Speed Uplink Packet Access
ZIF	Zero intermediate frequency
WCDMA	Wideband Code Division Multiple Access
VCTCXO	Voltage control temperature-compensated crystal oscillator
USIM	Universal subscriber identity module
UMTS	Universal mobile telecommunications system
UART	Universal asynchronous receiver transmitter

SIMCOM CONFIDENTIAL

E. Safety Caution

Table 42: Safety caution

Marks	Requirements
	When in a hospital or other health care facility, observe the restrictions about the use of mobiles. Switch the cellular terminal or mobile off, medical equipment may be sensitive and not operate normally due to RF energy interference.
	Switch off the cellular terminal or mobile before boarding an aircraft. Make sure it is switched off. The operation of wireless appliances in an aircraft is forbidden to prevent interference with communication systems. Forgeting to think much of these instructions may impact the flight safety or offend local legal action, or both.
	Do not operate the cellular terminal or mobile in the presence of flammable gases or fumes. Switch off the cellular terminal when you are near petrol stations, fuel depots, chemical plants or where blasting operations are in progress. Operation of any electrical equipment in potentially explosive atmospheres can constitute a safety hazard.
	Your cellular terminal or mobile receives and transmits radio frequency energy while switched on. RF interference can occur if it is used close to TV sets, radios, computers or other electric equipment.
	Road safety comes first! Do not use a hand-held cellular terminal or mobile when driving a vehicle, unless it is securely mounted in a holder for hands free operation. Before making a call with a hand-held terminal or mobile, park the vehicle.
	GSM cellular terminals or mobiles operate over radio frequency signals and cellular networks and cannot be guaranteed to connect in all conditions, especially with a mobile fee or an invalid SIM card. While you are in this condition and need emergent help, please remember to use emergency calls. In order to make or receive calls, the cellular terminal or mobile must be switched on and in a service area with adequate cellular signal strength. Some networks do not allow for emergency call if certain network services or phone features are in use (e.g. lock functions, fixed dialing etc.). You may have to deactivate those features before you can make an emergency call. Also, some networks require that a valid SIM card be properly inserted in the cellular terminal or mobile.

Contact us:

Shanghai SIMCom Wireless Solutions Ltd.

Add: SIM Technology Building, No.633, Jinzhong Road, Changning District, Shanghai P.R. China 200335

Tel：+86 21 3235 3300

Fax：+86 21 3235 3020

URL：www.simcomm2m.com

SIMCOM CONFIDENTIAL FILE