Sure Cross® Performance DX80 Wireless I/O Networks

Instruction Manual

Original Instructions
132607 Rev. P
25 March 2020
© Banner Engineering Corp. All rights reserved

more sensors, more solutions

132607

Contents

1 The Sure Cross® Wireless Network 4
1.1 Gateways and Nodes 4
1.2 GatewayPro 4
1.3 DX83 Ethernet Bridge Overview 5
1.4 Host Controller Systems 5
1.5 What is FlexPower®? 6
1.6 Sure Cross® User Configuration Software 6
2 Features 7
2.1 DX80 Gateway and Node Components 7
2.2 DX80 Gateway and Node Wiring Chamber 7
2.3 DX80 GatewayPro 8
2.4 DX83 Ethernet Bridge 8
2.5 Wiring Diagrams 9
2.5.1 Apply Power to the Gateway or Node 9
2.5.2 DX80...C Wiring 9
2.5.3 Industrial Ethernet Wiring 9
2.6 Dimensions 10
2.6.1 Gateways and Nodes 10
2.6.2 GatewayPro 11
2.6.3 DX83 Ethernet Bridge 12
2.6.4 DX80...E Housings 12
3 Setting Up Your Wireless Network 13
3.1 Mixing Performance and Non-Performance (150 mW) Radios in the Same Network 13
3.2 Apply Power to the Gateway or Node 14
3.3 Bind Radios to Form Networks 14
3.4 LED Behavior for the Gateways 15
3.5 LED Behavior for the Nodes 16
3.6 Conducting a Site Survey (Gateway and Nodes) 16
3.6.1 Conduct a Site Survey Using the Menu System 16
3.6.2 Conduct a Site Survey from a Gateway Board Model 17
3.6.3 Conduct a Site Survey Using Modbus Commands 18
3.6.4 Interpreting the Site Survey Results 19
3.6.5 Improving Your Site Survey Results 19
4 Installing Your Sure Cross® Radios 22
4.1 Mounting Sure Cross Devices Outdoors 22
4.1.1 Watertight Glands and NPT Ports 22
4.2 Other Installation Requirements 23
4.3 Installation Quick Tips 23
4.3.1 Create a Clear Communication Path 23
4.3.2 Increase the Height of the Antennas 23
4.3.3 Collocated Radios 23
4.3.4 Be Aware of Seasonal Changes 24
4.4 Installing a Basic Remote Antenna 24
4.4.1 Weatherproof Remote Antenna Installations 25
4.4.2 Installing Remote Antennas 25
4.4.3 Mount a Dome Antenna to the Enclosure 26
4.4.4 Use an N-Type, Pole-Mounted Antenna 27
5 Advanced Setup Options 29
5.1 DX80 Menu Structure 29
5.1.1 RUN Menu 31
5.1.2 DINFO (Device Information) Menu 32
5.1.3 FCTRY (Factory) Menu 33
5.1.4 SITE (Site Survey) Menu 34
5.1.5 DVCFG (Device Configuration) Menu 35
5.1.6 DERR (Device Error) Menu 36
5.2 Web-based Configuration for the GatewayPro on DX83 37
5.2.1 Accessing the Web-based Configuration Screens 38
5.2.2 Changing the IP Address 38
5.3 Binding Mode: What does it do? 39
5.3.1 Automatic Binding Using the Menu Navigation 39
5.3.2 Bind Radios Using Modbus Commands 40
5.4 Setting the Network ID in Extended Addressing Mode 41
5.5 Manually Assign a Binding Code to a Gateway 41
5.6 Manually Assign a Binding Code to a Node 42

5.7 Setting the Maximum System Devices 42
5.8 Storage and Sleep Modes 43
5.9 Modbus Holding Registers 43
5.10 Modbus Communication Parameters 43
5.10.1 Set the Slave ID on a DX80 Gateway 44
5.10.2 Set the Baud Rate 44
5.10.3 Set the Parity 44
5.11 Default Output Conditions 45
5.11.1 Host Link Failure 45
5.11.2 Gateway Link Failure 46
5.11.3 Node Link Failure 46
5.12 Defining the Units 46
5.12.1 Interpreting Register Values in the Banner Wireless System 47
6 Product Support and Maintenance 48
6.1 DX80 Performance Documentation 48
6.2 Troubleshooting 48
6.2.1 Startup Problems 48
6.2.2 LED Message Codes 49
6.2.3 LCD Message Codes 50
6.2.4 Inputs and Outputs 51
6.2.5 Radio Link Time-Out and Recovery (Non-Host Connected Systems) 51
6.3 Maintenance 52
6.3.1 Replacing the Main Body Gasket 52
6.3.2 Replacing the Rotary Dial Access Cover 52
6.3.3 Install or Replace the Battery for a DX81 Model 52
6.3.4 Install or Replace the Battery for a DX80 Integrated Battery Model 53
6.3.5 Install or Replace the Battery (DX99...D Models) 54
6.4 Sure Cross® Radio Certifications 54
6.4.1 FCC and ISED Certification, 900 MHz, 1 Watt Radios 55
6.4.2 FCC and ISED Certification, 2.4GHz 56
6.4.3 Exporting Sure Cross® Radios 57
6.5 Glossary of Wireless Terminology 57
6.6 Contact Us 68
6.7 Warnings 68
6.8 Banner Engineering Corp. Limited Warranty 68

1 The Sure Cross® Wireless Network

The Sure Cross® Performance wireless I/O network provides reliable monitoring without wiring or conduit installation. The SureCross wireless network operates independently or in conjunction with a host system, PLC, and/or PC software.

Each wireless network system consists of one Gateway and one or more Nodes. Devices ship with factory-defined discrete, analog, or a mix of discrete and analog inputs and outputs.

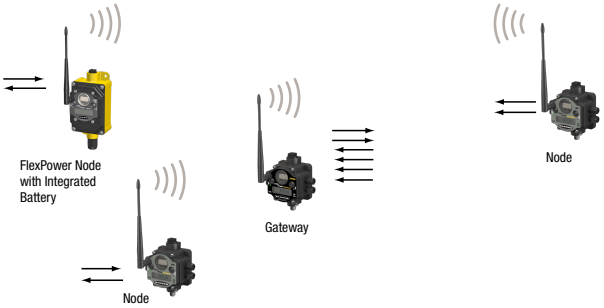

The Sure Cross® Performance network is a deterministic system—the network identifies when the radio signal is lost and drives relevant outputs to user-defined conditions. After the radio signal is reacquired, the network returns to normal operation.

1.1 Gateways and Nodes

Every wireless network must have one Gateway, which schedules communication traffic and controls the I/O configuration for the network, and one or more Nodes.

A **Gateway** is the master device within each radio network. Similar to how a gateway device on a wired network acts as a "portal" between networks, the Sure Cross Gateway acts as the portal between the wireless network and the host controller. When the Gateway, using its Modbus RTU RS-485 connection, is a Modbus slave to a Modbus RTU host controller, the wireless network may contain up to 47 Nodes in a single wireless network. The Gateway holds the Modbus registers of all wireless devices within the network.

A **Node** is a wireless network end-point device used to provide sensing capability in a remote area or factory. The Node collects data from sensors and communicates the data back to the Gateway. Nodes are available in a wide variety of power or input/output options.

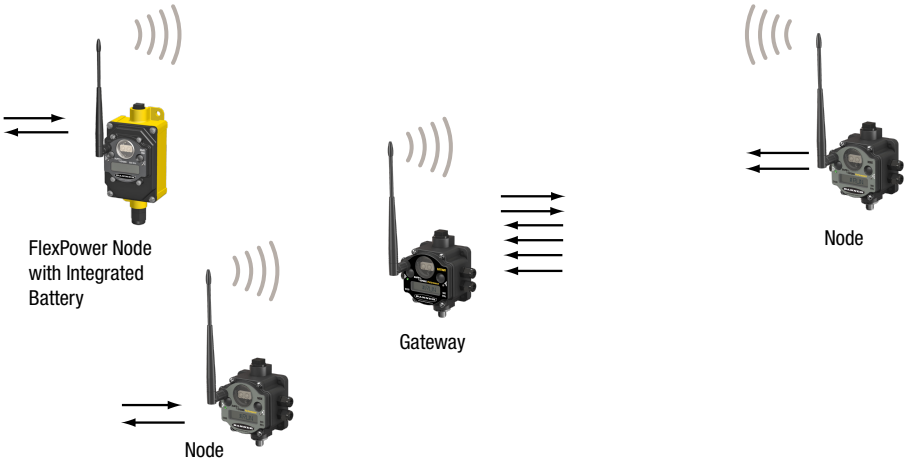

1.2 GatewayPro

A GatewayPro combines the wireless capability of the standard Gateway with the protocol converter of a DX83 Ethernet Bridge, resulting in a device that is the master of the wireless network and a slave to an Industrial Ethernet network.

The GatewayPro is treated the same as a standard Gateway, with the GatewayPro providing Modbus/TCP or EtherNet/IP slave access to all the information on the wireless network instead of the Modbus 485 slave interface the standard Gateway provides. There are two basic models of the GatewayPro:

- **DX80P*T6*.** The T6 model acts as a protocol converter only, offering the Modbus/TCP or EtherNet/IP communication protocols.
- **DX80P*A6*.** The A6 model includes DX80 wireless network configuration, Modbus RTU master, Modbus/TCP client/server, Script Basic, e-mail, data logging, and trending.

Connect a host controller system to the GatewayPro using its industrial Ethernet connection. To connect the GatewayPro to the host system without using an Ethernet switchbox/hub, some host systems may require a crossover cable.

By default, the GatewayPro is configured to use Modbus/TCP. To use EtherNet/IP, connect the GatewayPro to a managed switch and you must use the Web Configuration tool to select EtherNet/IP. For more information, refer to the Sure Cross DX80 Performance Instruction Manual (p/n 132607) or the Host Configuration Instruction Manual (p/n 132114).

1.3 DX83 Ethernet Bridge Overview

Connecting a Modbus RTU network to an Ethernet-based network requires using another type of networking gateway, the DX83 Ethernet Bridge. The DX83 Ethernet Bridge device acts as a communications bridge between the Modbus RTU network (Gateway) and Modbus/TCP or EtherNet/IP (host system).

In the Modbus RTU network, the DX83 Ethernet Bridge is the Modbus 485 master and the Gateway is set to the default Modbus slave setting. A DX83 Ethernet Bridge connected to a DX80 Gateway functions similar to a DX80 GatewayPro with I/O points. The DX83 Ethernet Bridge adds the Web page configuration ability to a Gateway-Node wireless network and interfaces to Ethernet using Modbus/TCP or EtherNet/IP protocols.

There are two basic DX83 models:

- **DX83T** acts as a protocol converter only, offering the Modbus/TCP or EtherNet/IP communication protocols.
- **DX83A** includes DX80 wireless network configuration, Modbus RTU master, Modbus/TCP client/server, Script Basic, e-mail, data logging, and trending.

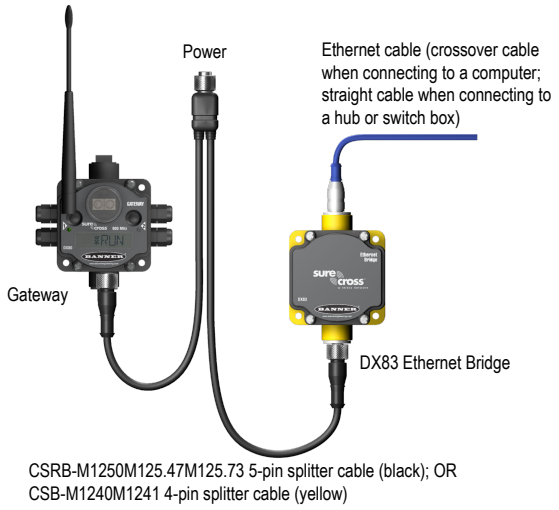

Connect a DX83 Ethernet Bridge to a host system using the industrial Ethernet connection on the DX83. To connect the DX83 directly to the host system without using an Ethernet switchbox/hub, some host systems may require a crossover cable.

By default, the DX83 is configured to use Modbus/TCP. To use EtherNet/IP, you must connect the DX83 to a managed switch and you must use the Web Configuration tool to select EtherNet/IP (see the Sure Cross DX80 Performance Instruction Manual (p/n 132607) or the Host Configuration Instruction Manual (p/n 132114).

1.4 Host Controller Systems

Host controller systems collect I/O data for logging, controlling other devices, or performing calculations.

Host controller systems can contain up to 15 Nodes (when using Rotary Dial Addressing Mode) or 47 Nodes (when using Extended Addressing Mode) within a single network. Inputs from Nodes within the network are transmitted to the Gateway, which communicates the information to a host system for processing. Although the Gateway is the master device within the radio network, it may be a slave to the Modbus network.

Host controlled DX80 wireless systems are configured using an Ethernet network connection and a Web page browser. An Ethernet connection can be established from a DX80 GatewayPro or a DX83 Ethernet Bridge serially connected to the DX80 Gateway.

1.5 What is FlexPower®?

Banner's FlexPower technology supplies a true wireless solution by allowing the device to operate using either 10 to 30 V dc, 3.6 V lithium D cell batteries, or solar power. This unique power management system can operate a FlexPower Node and an optimized sensing device for up to five years on a single lithium D cell.

- FlexPower Nodes may be powered from 10 to 30 V dc and use an external battery supply module to provide a battery back-up solution.
- When a FlexPower Node receives 10 to 30 V dc, it operates like a standard 10 to 30 V dc Node.
- Good applications for FlexPower devices operating from batteries include sensors that require no or very little power, including dry contacts, RTDs, and thermocouples.

The following FlexPower options are available:

- DX81-LITH, a single battery supply module;
- DX81P6, a 6-pack of lithium batteries;
- DX81H, a single battery supply module designed specifically to power the DX99 Intrinsically Safe devices with polycarbonate housings; and
- BWA-SOLAR PANEL 3W, 5W, or 20W, solar panel assemblies.

DX81-LITH: Single battery supply module

DX81H: Single battery supply module designed specifically to power the DX99 Intrinsically Safe devices with polycarbonate housings

DX81P6: Six-pack battery supply module

BWA-SOLAR PANEL 3W, BWA-SOLAR PANEL 5W, or BWA-SOLAR PANEL 20W: Includes 3 W, 5 W, or 20 W solar panel.

Order the solar controller (model BWA-Solar CNTRL-12V) separately when you are not using the solar panel with a DXM Wireless Controller. For more information about solar power solutions, see *Sure Cross® Solar Solutions*.

1.6 Sure Cross® User Configuration Software

The User Configuration Software offers an easy way to link I/O points in your wireless network, view I/O register values, and set system communication parameters when a host system is not part of the wireless network. The software runs on any computer with the Windows Vista, Windows 7, Windows 8, or Windows 10 operating system.

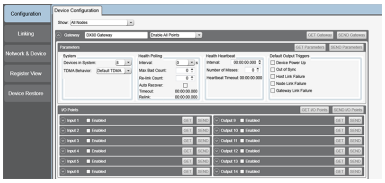

Use a USB to RS-485 adapter cable to connect a standalone DX80 Gateway to the computer. For DXM Controllers with an internal DX80 radio, connect a computer to the DXM Controller using a USB or Ethernet connection. Download the most recent revisions of the configuration software from Banner Engineering's website: www.bannerengineering.com/wireless.

The USB to RS-485 adapter cable is not required for the DXM Controller. For standalone DX80 Gateway devices use:

- USB to RS-485 adapter cable model BWA-UCT-900 for 1 Watt radios
- USB to RS-485 adapter cable model BWA-HW-006 for all other radios

2 Features

The following feature callouts refer to the DX80 Gateway and Node models, the GatewayPro, and the DX83 Ethernet Bridge. The wiring diagrams include information for connection power and sensors using the 5-pin Euro-style connect, the terminal wiring board, and the Industrial Ethernet connection on the DX83 and GatewayPro.

2.1 DX80 Gateway and Node Components

The DX80 Gateway and Node use the same housing and include the same physical features.

1. Port, NPT gland, or plug. If unused, install the provided plug into the 1/2 NPT threaded port. Refer to the Installation section if an IP67 seal is required.

2. Rotary switch 1 (left). In Rotary Dial Addressing Mode, sets the Network ID (NID) to a hexidecimal value from 0 to F, for a total of 16 Network IDs. A Gateway and its corresponding Nodes must be assigned the same Network ID.

Rotary switch 2 (right). On the Gateway, sets the Gateway's LCD viewing device address. The Gateway is predefined as Device Address 0. On the Node, sets the Node's Device Address (hexidecimal 1 to F). Each Node within a network must have a unique Node Device Address.

3. Push button 1. Single-click to advance across all top-level DX80 menus. Single-click to move down interactive menus, once a top-level menu is chosen. Button 1 is also used to wake integrated battery models from the hibernation mode they ship in.

4. Push button 2. Double-click to select a menu and to enter manual scrolling mode. Double-click to move up one level at a time.

5. LED 1 and 2. Provide real-time feedback to the user regarding RF link status, serial communications activity, and the error state.

6. LCD Display. Six-character display provides run mode user information and shows enabled I/O point status. This display allows the user to conduct a Site Survey (RSSI) and modify other DX80 configuration parameters without the use of a PC or other external software interfaces. On the Node, after 15 minutes of inactivity, the LCD goes blank. Press any button to refresh the display.

7. 5-Pin M12 Euro-style quick-disconnect serial port

2.2 DX80 Gateway and Node Wiring Chamber

The DX80 Gateway and Node use the same housing and terminal block for wiring.

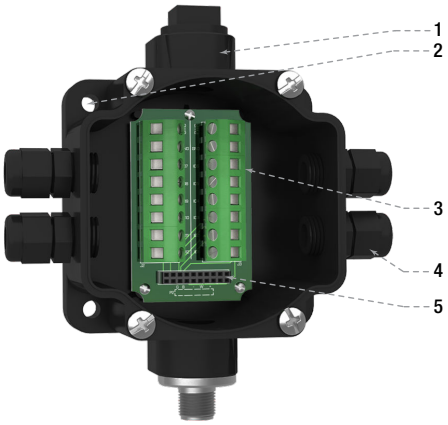

1. Housing. The rugged, industrial DX80 housing meets IEC IP67 standards.

2. Mounting hold, #10/M5 clearance. Mounting Holes accept metric M5 or UNC/UNF #10 hardware -- DIN rail mount adapter bracket available.

3. Wiring terminal strip. The 16 spring-clip type wiring terminals accept wire sizes: AWG 12-28 or 2.5 sq mm.

4. Port, PG-7 gland or blank. The PG-7 threaded ports can accept provided cable glands or blanks.

5. Ribbon connector. Ribbon cable connects wiring base to LCD/radio.

The GatewayPro has no serviceable parts inside the housing and no wiring chamber. During setup or standard operation, there should not be a need to open the GatewayPro.

2.3 DX80 GatewayPro

The GatewayPro has many of the same features as the Gateway and Node, including the LEDs, the buttons, LCD, and Euro-style connector.

1. Industrial ethernet port, female.

2. Rotary switch 1 (left). Sets the Network ID (NID) to a hexidecimal value from 0 to F, for a total of 16 Network IDs. A Gateway and its corresponding Nodes must be assigned the same Network ID.

3. Rotary switch 2 (right). On the Gateway, sets the Gateway's LCD viewing device address. The Gateway is predefined as Device Address 0. On the Node, sets the Node's Device Address (hexidecimal 1 to F). Each Node within a network must have a unique Node Device Address.

3. Push button 1. Single-click to advance across all top-level DX80 menus. Single-click to move down interactive menus, once a top-level menu is chosen.

4. Push button 2. Double-click to select a menu and to enter manual scrolling mode. Double-click to move up one level at a time.

5. LED 1 and 2. Provide real-time feedback to the user regarding RF link status, serial communications activity, and the error state.

6. LCD Display. Six-character display provides run mode user information and shows enabled I/O point status. This display allows the user to conduct a Site Survey (RSSI) and modify other DX80 configuration parameters without the use of a PC or other external software interfaces. On the Node, after 15 minutes of inactivity, the LCD goes blank. Press any button to refresh the display.

7. 5-pin M12 Euro-style quick disconnect serial port.

2.4 DX83 Ethernet Bridge

The DX83 Ethernet Bridge uses the same housing and same mounting holes as the Gateway and Node.

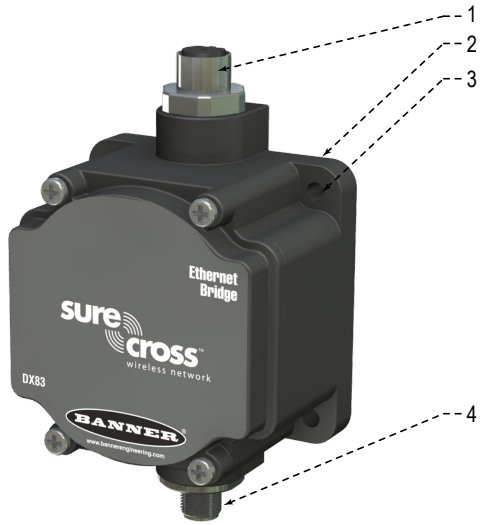

1. Industrial ethernet port, female.

2. Housing. The rugged, industrial DX80 housing meets IEC IP67 standards.

3. Mounting hold, #10/M5 clearance. Mounting Holes accept metric M5 or UNC/UNF #10 hardware -- DIN rail mount adapter bracket available.

4. 5-Pin M12 Euro-style quick-disconnect serial port

2.5 Wiring Diagrams

Use the following drawings to correctly wire power and I/O to the SureCross Wireless radio devices. For more information about wiring sensors to the SureCross devices, refer to *Sensor Connections*.

2.5.1 Apply Power to the Gateway or Node

Integral 5-pin M12/Euro-style male quick disconnect wiring depends on the model and power requirements of the device. Not all models can be powered by 10 to 30 V dc and not all models can be powered by 3.6 to 5.5 V dc. Refer to *Specifications* to verify the power requirements of your device.

5-pin M12	Pin	Wire Color	Gateway (10 to 30 V dc)	Node (10 to 30 V dc)	Node (FlexPower)
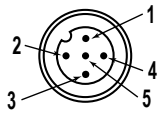	1	brown	10 to 30 V dc input	10 to 30 V dc	
	2	white	RS485 / D1 / B / +		
	3	blue	dc common (GND)	dc common (GND)	dc common (GND)
	4	black	RS485 / D0 / A / -		
	5	gray	Comms gnd		3.6 to 5.5 V dc [1]

1. Apply power to the Gateway by connecting the 10 to 30 V dc cable as shown.
   The Gateway begins in RUN mode, displays the current network ID (NID), then identifies itself as a Gateway.
2. Apply power to the Node by connecting the 10 to 30 V dc cable or the DX81 Battery Supply Module as shown. To apply power to a FlexPower Node with an integrated battery, install the battery into the housing.
   The Node starts in RUN mode, displays the current network ID, then identifies itself as a Node and lists its device ID.

2.5.2 DX80...C Wiring

Wiring power to the DX80...C models varies depending the power requirements of the model. Connecting DC power to the communication pins (Tx/Rx) causes permanent damage. For *Flex*Power devices, do not apply more than 5.5 V to the B+ terminal.

Terminal Label	Gateway and DX85	10 to 30 V DC Powered Nodes	Battery Powered Nodes
V+	10 V DC to 30 V DC	10 V DC to 30 V DC	
Tx/+	RS485 / D1 / B / +		
V–	DC common (GND)	DC common (GND)	DC common (GND)
Rx/–	RS485 / D0 / A / -		
B+			3.6 to 5.5 V DC

2.5.3 Industrial Ethernet Wiring

Use the 4-pin industrial Ethernet connection to connect the radio network to an Ethernet-based host system.

4-pin Industrial Ethernet Connector	Pin	Wire Color	Description
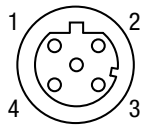	1	White/orange	+ Tx
	2	White/blue	+Rx
	3	Orange	–Tx
	4	Blue	–Rx

[1] For FlexPower devices, do not apply more than 5.5 V dc to the gray wire.

2.6 Dimensions

The DX80, DX83, and DX70 models all share the same housing and mounting hole dimensions.

2.6.1 Gateways and Nodes

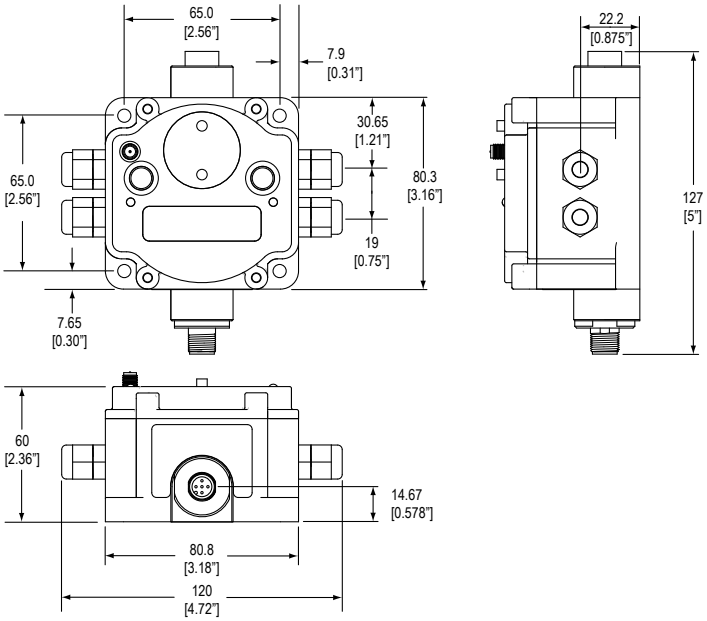

DX80...C Gateways and Nodes

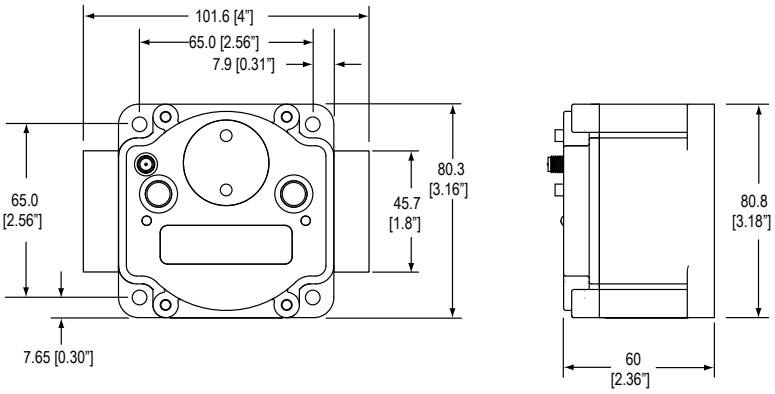

DX80...E Housings

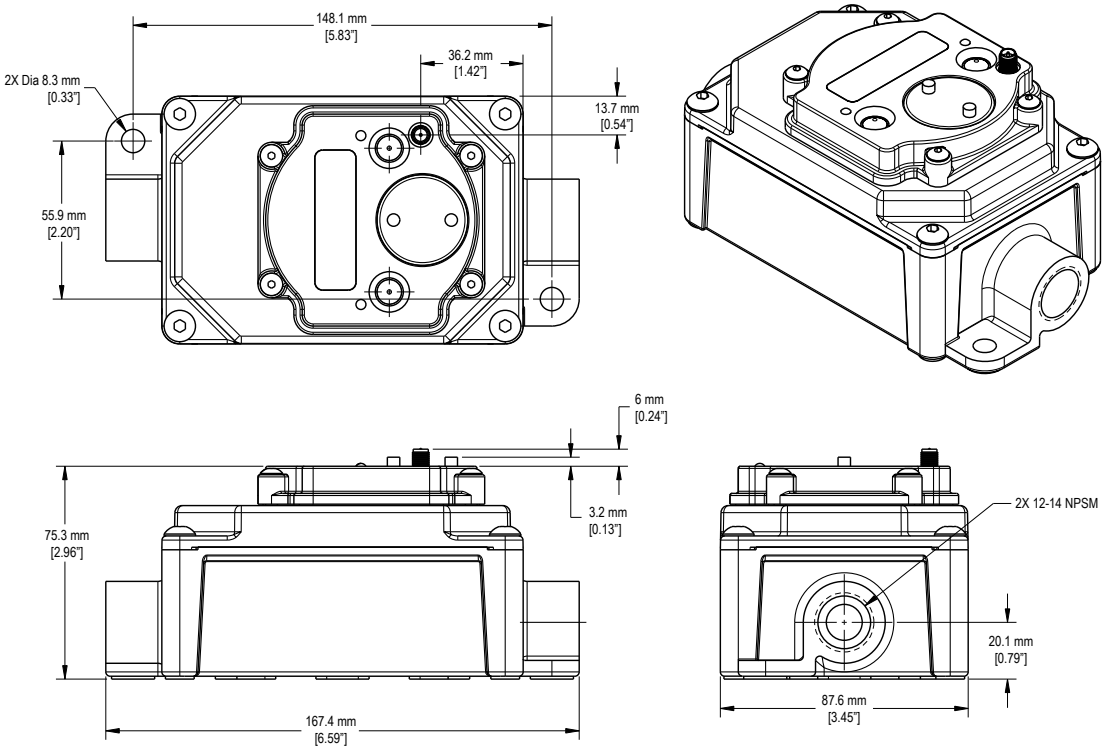

Figure 1. DX80...E Housing

2.6.2 GatewayPro

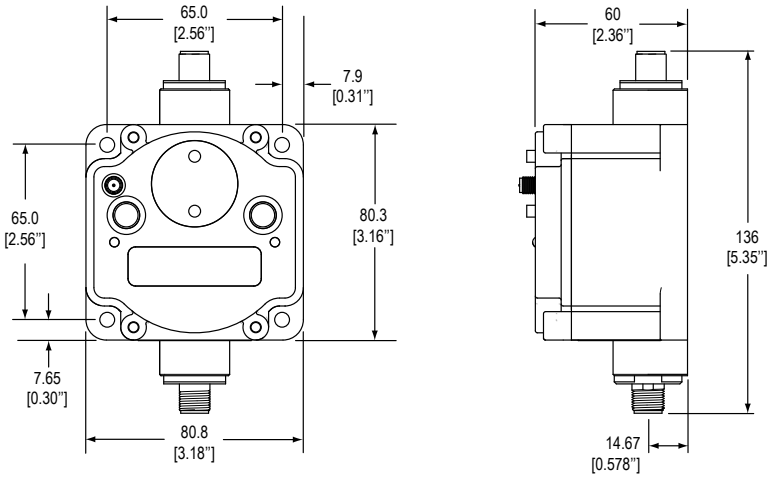

2.6.3 DX83 Ethernet Bridge

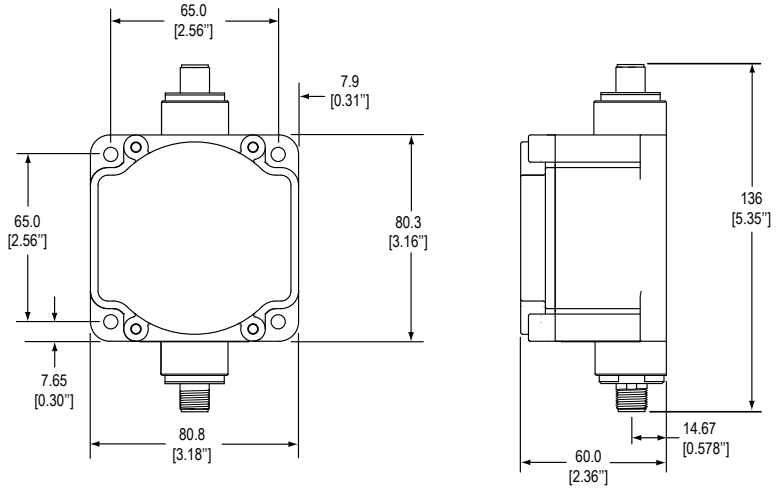

2.6.4 DX80...E Housings

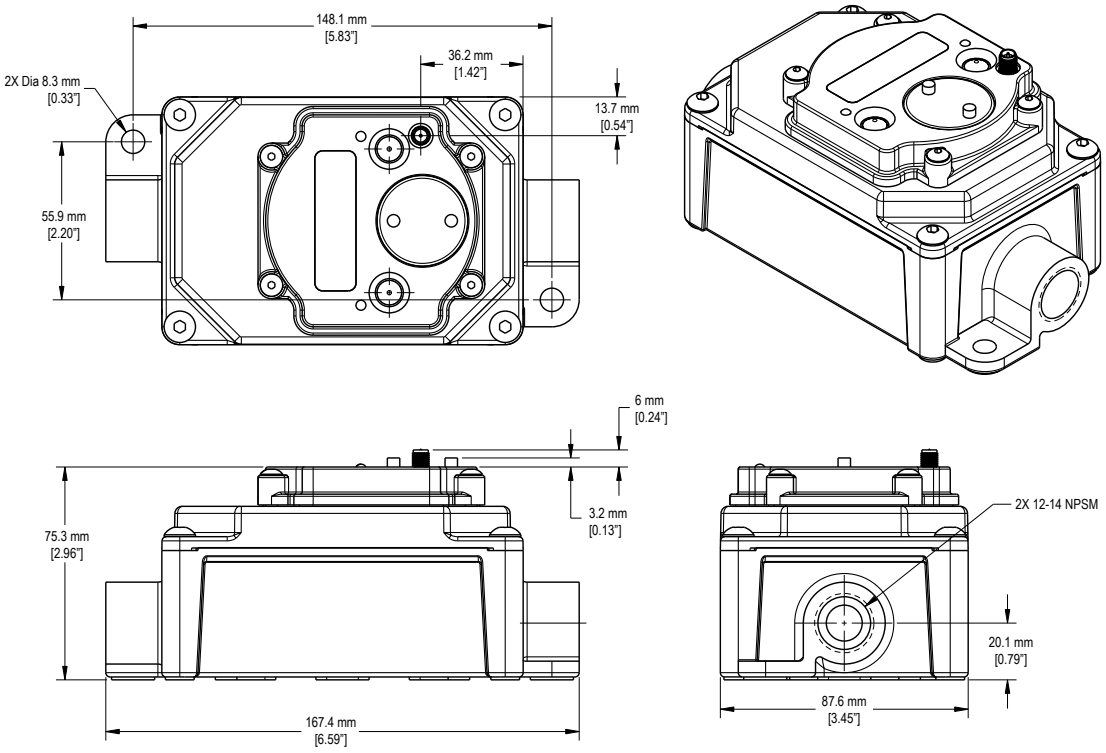

Figure 2. DX80...E Housing

3 Setting Up Your Wireless Network

To set up and install your wireless network, follow these steps.

Disconnect the power from your Sure Cross devices.

1. Configure the DIP switches of all devices. For DIP switch configurations, refer to the product's datasheet.
2. If your device has I/O, connect the sensors to the Sure Cross devices. For available I/O, refer to the product's datasheet. If your device does not have I/O, skip this step.
3. Refer to the wiring diagrams to apply power to all devices.
   - For housed models, the Gateway's LED 1 is solid green and the Node's LED 2 flashes red to indicate there is no radio link to the Gateway.
   - For board-level models, the Gateway's LED is solid green and the Node's LED flashes red to indicate there is no radio link to the Gateway.
4. Form the wireless network by binding the Nodes to the Gateway.
5. Observe the LED behavior to verify the devices are communicating with each other.
   - For housed models, the Gateway's LED 1 is solid green and the Node's LED 1 flashes green to indicate it is communicating with the Gateway.
   - For board-level models, the Gateway's LED is solid green and the Node's LED flashes green to indicate it is communicating with the Gateway.
6. Configure any I/O points to use the sensors connected to the Sure Cross devices.
7. Conduct a site survey between the Gateway and Nodes.
8. Install your wireless sensor network components.

3.1 Mixing Performance and Non-Performance (150 mW) Radios in the Same Network

To comply with federal regulations, the 150 mW radios and 1 Watt radios communicate differently. All Performance models offer the ability to select between 250 mW and 1 Watt operation using the DIP switches. To mix Performance radios with non-Performance radios, refer to the product datasheet and:

- Operate Performance radios in 250 mW mode, not 1 Watt mode
- Set non-Performance (150 mW) radios to use Extended Address Mode

The 150 mW, 250 mW, and 1 Watt networks operate when collocated, but verify the antenna separation distance between a Gateway and Node or between two Gateways is at least 10 feet apart. For more detailed instructions about setting up your wireless network, refer to the following documents:

- DX80 Performance Quick Start Guide (p/n 128185)
- DX80 Performance Wireless I/O Network Instruction Manual (p/n 132607)

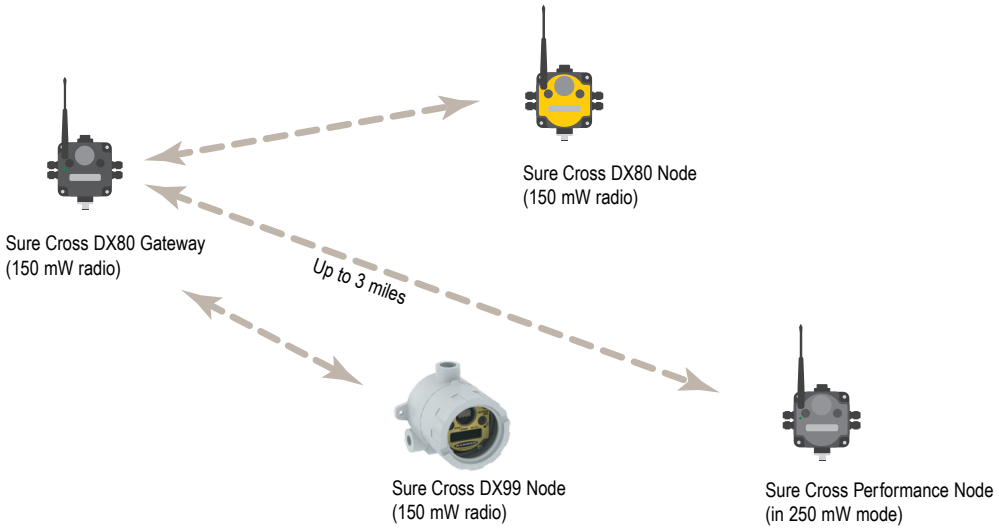

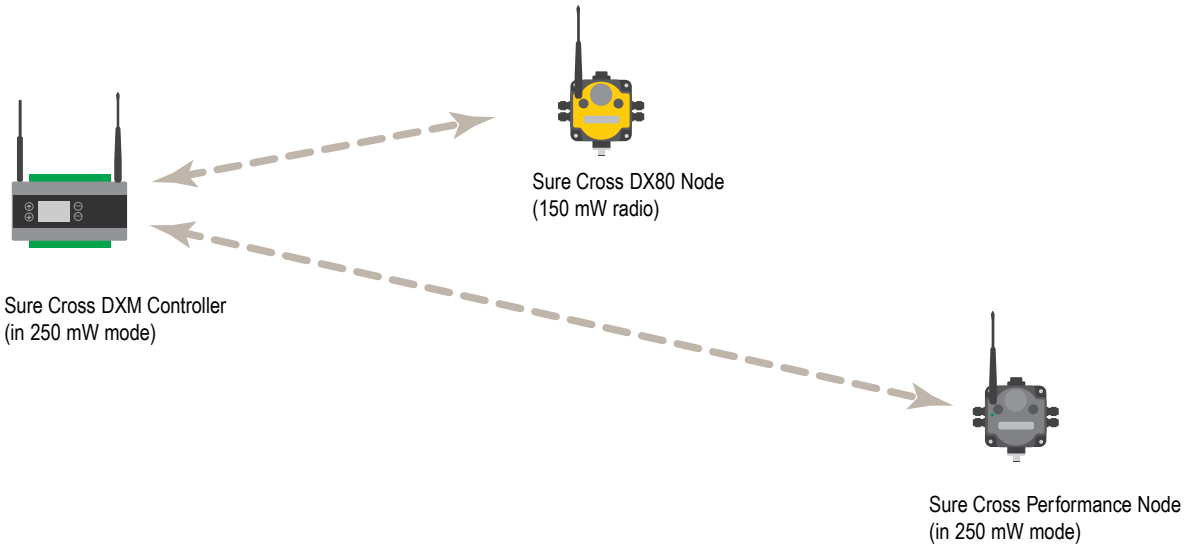

3.2 Apply Power to the Gateway or Node

Integral 5-pin M12/Euro-style male quick disconnect wiring depends on the model and power requirements of the device. Not all models can be powered by 10 to 30 V dc and not all models can be powered by 3.6 to 5.5 V dc. Refer to *Specifications* to verify the power requirements of your device.

5-pin M12	Pin	Wire Color	Gateway (10 to 30 V dc)	Node (10 to 30 V dc)	Node (FlexPower)
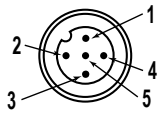	1	brown	10 to 30 V dc input	10 to 30 V dc	
	2	white	RS485 / D1 / B / +		
	3	blue	dc common (GND)	dc common (GND)	dc common (GND)
	4	black	RS485 / D0 / A / -		
	5	gray	Comms gnd		3.6 to 5.5 V dc [2]

1. Apply power to the Gateway by connecting the 10 to 30 V dc cable as shown.
   The Gateway begins in RUN mode, displays the current network ID (NID), then identifies itself as a Gateway.
2. Apply power to the Node by connecting the 10 to 30 V dc cable or the DX81 Battery Supply Module as shown. To apply power to a FlexPower Node with an integrated battery, install the battery into the housing.
   The Node starts in RUN mode, displays the current network ID, then identifies itself as a Node and lists its device ID.

3.3 Bind Radios to Form Networks

Binding Nodes to a Gateway ensures the Nodes only exchange data with the Gateway they are bound to. For a more detailed definition of binding mode, refer to the *Advanced Setup* section of the *SureCross Wireless I/O Networks* instruction manual.

Apply power to the Gateway and Nodes.

1. Enter binding mode on the Gateway.
   - If you have a two-button Gateway, triple-click button 2
   - If you have a one-button Gateway, triple-click the button
   - If you have a Gateway with no buttons, remove the rotary dial access cover and set both the right and left rotary dials to 0, then set both the right and left rotary dials to F.
   - If you have a DXM, under the **ISM Radio** menu, use the down arrow button to highlight the **Binding** menu. Click **ENTER**.

[2] For FlexPower devices, do not apply more than 5.5 V dc to the gray wire.

Two-Button Gateway	One-Button Gateway
	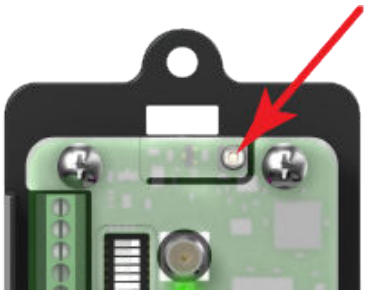

The LEDs flash alternately when the Gateway is in binding mode. Any Node entering binding mode will bind to this Gateway.

2. Use the Node's rotary dials to assign a valid decimal Node Address (between 01 and 47). The left rotary dial represents the tens digit (0 through 4) and the right dial represents the ones digit (0 through 9) of the Node Address.
3. Enter binding mode on the Node.
   - If you have a two-button Node, triple-click button 2.
   - If you have a one-button Node, triple-click the button.
   - If you have a Node with no buttons, remove the top cover and set both the left and right rotary dials to F to enter binding mode. [3]

   The Node enters binding mode and locates the Gateway in binding mode.

   For two LED models, the red LEDs flash alternately. After binding is complete, both LEDs are both solid red for a few seconds.

   For one-LED models, the red and green LED flashes alternately while the Node searches for the Gateway. After binding is complete, the LED is red and green for four seconds (looks amber), then the red and green flash simultaneously (looks amber) four times.

   The Node automatically exits binding mode, cycles its power, then enters RUN mode.
4. For DXM models, click **BACK** to exit binding for that specific Node address.
5. Repeat steps 2 through 4 for all Nodes that will communicate to this Gateway.
6. Exit binding mode on the Gateway.
   - If you have a two-button Gateway, single-click either button.
   - If you have a one-button Gateway, single-click the button.
   - If you have a Gateway with no buttons, change the Gateway's rotary dials to a valid Network ID.
   - If you have a DXM, click **BACK** until you return to the main menu.

When installing special kits with pre-mapped I/O, indicated by device model numbers beginning in DX80K, return the rotary dials to their original positions after binding. If the rotary dials are not returned to their original positions, the I/O mapping will not work.

3.4 LED Behavior for the Gateways

Verify all devices are communicating properly. The radios and antennas must be a minimum distance apart to function properly. Recommended minimum distances are:

900 MHz 150 mW and 250 mW radios: 6 feet
900 MHz 1 Watt radios: 15 feet
2.4 GHz 65 mW radios: 1 foot

LED 1	LED 2	Gateway Status
Solid green		Power ON
Flashing red	Flashing red	Device Error
	Flashing amber	Modbus Communication Active

[3] Some older M-GAGE Nodes (models DX80N*X1W0P0ZR) may require F-F binding despite having a single button. Refer to the Node's datasheet for specific information.

LED 1	LED 2	Gateway Status
	Flashing red	Modbus Communication Error

For Gateway and Ethernet Bridge systems, active Modbus communication refers to the communication between the Gateway and the Ethernet Bridge. For GatewayPro systems, the Modbus communication LEDs refer to the communication internal to the GatewayPro. For Gateway-only systems, the Modbus communication LEDs refer to the communication between the Gateway and its host system (if applicable).

3.5 LED Behavior for the Nodes

Nodes do not sample inputs until they are communicating with the Gateway. The radios and antennas must be a minimum distance apart to function properly. Recommended minimum distances are:

900 MHz 150 mW and 250 mW radios: 6 feet
900 MHz 1 Watt radios: 15 feet
2.4 GHz 65 mW radios: 1 foot

LED 1	LED 2	Node Status
Flashing green		Radio Link Ok
Flashing red	Flashing red	Device Error
	Flashing red, 1 per 3 sec	No Radio Link

3.6 Conducting a Site Survey (Gateway and Nodes)

A Site Survey, also known as a Radio Signal Strength Indication (RSSI), analyzes the radio communications link between the Gateway and any Node within the network by analyzing the radio signal strength of received data packets and reporting the number of missed packets that required a retry.

Perform a Site Survey before permanently installing the radio network to ensure reliable communication. Activate Site Survey mode from either the Gateway buttons or the Gateway Modbus holding register 15. Only the Gateway can initiate a Site Survey, and the Site Survey analyzes the radio communications link with one Node at a time.

3.6.1 Conduct a Site Survey Using the Menu System

Initiate a Site Survey using the Gateway’s buttons and menu system.

1. Remove the Gateway's rotary dial access cover.
2. Set the Gateway's rotary dials to the desired Node number.

   For example, to check the status of Node 1, set the Gateway's left rotary dial to 0 and the right rotary dial to 1. To check the status of Node 32, set the Gateway's left rotary dial to 3 and the right rotary dial to 2.

   The Gateway is now enabled to read the status of the selected Node. The display scrolls through the Node’s I/O status.
3. Single-click button 1 to scroll across the menu levels until reaching the Site Survey (SITE) menu.
4. Single-click button 2 to enter the Site Survey menu.
5. Single-click button 2 to begin conducting a Site Survey with the Node selected in step 2.
   The Gateway analyzes the quality of the signal from the selected Node by counting the number of data packets it receives from the Node.
6. Examine reception readings (M, R, Y, G) of the Gateway at various locations.

   Site survey results display as a percentage. M represents the percent of missed packets while R, Y, and G represent the percent of received packets at a given signal strength.

   M = Percent of missed packets; R = RED marginal signal; Y = YELLOW good signal; G = GREEN excellent signal. Record the results if you need troubleshooting assistance from the factory.
7. Change the Gateway's rotary dials to conduct a Site Survey with another Node and repeat steps 2 through 6.
8. To end the Site Survey, double-click the Gateway's button 2.
9. Change the Gateway's rotary dials back to 0.
   The LCD displays the device readings for the Gateway.
10. Double-click button 2 to move back to the top level menu.

11. Single-click button 1 to return to RUN mode.
12. Install the rotary dial access cover, referring to the Installation section of the manual to create an IP67 seal.

SITE (Site Survey) Menu

The SITE menu displays the results of a Site Survey conducted with this Gateway.

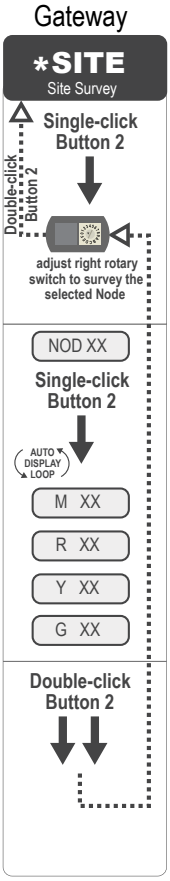

The SITE menu displays the device number of the Node the Site Survey was conducted with as well as the missed, green, yellow, and red received packet count.

The SITE menu is only available on the Gateways.

To access the SITE menu, single-click button 1 to scroll across the menu levels until reaching the Site Survey (SITE) menu.

See Conduct a Site Survey Using the Menu System on p. 16.

See Interpreting the Site Survey Results on p. 19.

3.6.2 Conduct a Site Survey from a Gateway Board Model

Conducting a Site Survey, also known as an RSSI (Radio Signal Strength Indication), analyzes the radio communications link between the Gateway and any Node within the network by analyzing the radio signal strength of received data packets and reporting the number of missed packets that required a retry.

Perform a Site Survey before permanently installing the radio network to ensure reliable communication. Only the Gateway can initiate a Site Survey, and the Site Survey analyzes the radio communications link with one Node at a time. Follow these steps to conduct a Site Survey from the board module Gateway.

1. Set the Gateway's rotary dials to the Node address you'd like to conduct a Site Survey with.

   For example, to analyze the signal strength between this Gateway and Node 02, rotate the left rotary dial to 0 and the right rotary dial to 2.

   The Site Survey automatically begins running. If there is no device at address 02, the LED is solid red. If there is a device at address 02, the LED flashes amber.
2. Evaluate the signal strength. The amber LED flashes at specific rates to indicate the Site Survey results. Each signal strength represents the majority of the data packets being received at that signal strength. For example, a strong signal strength indicates the majority of the data packets were received at a strong signal, but a few may have been received at a good or weak signal strength.
   - Eight flashes per second: Very strong signal strength
   - Four flashes per second: Strong signal strength
   - Two flashes per second: Good signal strength

- One flash per second: Weak signal strength
- Solid amber LED: No radio communication detected

3. To exit the Site Survey, set the Gateway's rotary dials to 00. Otherwise, after 15 minutes the Gateway automatically exits Site Survey mode.
   The LED flashes green to indicate the Gateway is in standard operating mode.

3.6.3 Conduct a Site Survey Using Modbus Commands

Use Modbus commands sent from the host system to start a Site Survey.

To start a Site Survey using a Modbus write holding register command, send a control code of 32 (0x20) and the Node number 1 through 47 (0x01 to 0x2F) to the Gateway Modbus holding register for I/O 15.

	Modbus Register	
	[15:8]	[7:0]
I/O 15	Control Code	Data Field

I/O 15 Control Messages			
Control Code	Data Field	Restrictions	Description
32	Node # 1–15	Gateway only	Enable Site Survey between Gateway and Node defined by the data field. All error messages from the Gateway are ignored when running Site Survey. Only one Node can participate in Site Survey at a time. To disable the Site Survey, use control code 0x20 with Node 0. A Node must be enabled to run the Site Survey, then disabled before selecting the next Node.

3.6.3 Example Command

	Modbus Register	
I/O 15	32	02

When Site Survey runs, the accumulated results are stored in the Gateway’s I/O 7 and I/O 8 holding registers. The LEDs on the both the Gateway and the Node’s front panel display the signal strength for the wireless RF link. The quality of the communications link is indicated by:

Green LED = excellent signal strength
Amber LED = good signal strength
Red LED = poor signal strength

The signal strength is the transmitted signal strength relative to the ambient RF signal present in a specific location, or noise floor.

The Gateway also displays the Site Survey results on the LCD (for models with an LCD). For one transmit and receive interval, the Gateway saves the lowest signal strength. The LCD and Modbus registers contain the results of the last 100 samples. The totals are a running tally of the last 100 samples and are continuously updated. Four categories are displayed:

G (green) = excellent signal strength
Y (yellow) = good signal strength
R (red) = poor signal strength
M = Missed packet

To disable Site Survey, send control code 32 (0x20) and Node number 0 (0x0), which is represented as 8192 (0x2000).

3.6.3 Site Survey Data Holding

With Site Survey active, registers I/O 7 and 8 are Site Survey data holding registers that store the accumulated Site Survey results. Error collections in holding register 8 are saved when Site Survey runs and restored after Site Survey is disabled.

	Register	
	[15:8]	[7:0]
I/O 7	Red Total	Missed Total
I/O 8	Green Total	Yellow Total

	Example Results	
	[15:8]	[7:0]
I/O 7	10	0
I/O 8	80	10

Note: This is the current register arrangement when using Modbus/TCP or Modbus RTU. In some older models, the Modbus/TCP registers are reversed (missed and yellow totals are in [8:15], red and green totals are in [0:7]).

3.6.4 Interpreting the Site Survey Results

Site Survey results are listed as a percentage of data packets received and indicate the signal strength of the received signal.

	Result	Description
	Green	Packets received at a strong signal strength. A strong signal strength is greater than –90 dBm at the receiver.
	Yellow	Packets received at a good signal strength. A good signal is between –90 and –100 dBm at the receiver.
	Red	Packets received at a weak signal strength. A weak signal is less than –100 dBm at the receiver.
	Missed	Packets not received on the first transmission and requiring a retry.

Judging if the reliability of a network's signal meets the needs of the application is not just a matter of green, yellow, and red packets received. In normal operating mode, when data packets are not received, the transmitter re-sends the packet until all data is received.

For slow monitoring applications such as a tank farm, where data is required in terms of seconds or minutes, receiving most of the data in the 'red' range, indicating a weak but reliable signal, transmits enough data for accurate monitoring. Nodes positioned near the outside range of the radio signal may have 90% of the data packets received in the red zone, again indicating a weak, but reliable signal.

We recommend keeping the missed packets average to less than 25%. When the network misses more than 25% of the data packets, the signal is usually too unreliable or obstacles may be interfering with the signal. When Site Survey reports the missed packets are 25% or higher, improve the radio system performance by:

- **Mounting the network's antennas higher** to clear obstacles in the area and improve the line of sight between Sure Cross® devices
- **Using higher gain antennas** to focus the energy of the radio signal in a specific direction and extend the signal's range
- **Adding data radios to the network** to extend the range of a radio network. For more information on data radios, please refer to Banner's white paper on range extension on www.bannerengineering.com/wireless.

3.6.5 Improving Your Site Survey Results

Refer to the Sure Cross Installation Guide (p/n 151514) for installation details and tips and tricks for improving your radio network's performance.

If your Site Survey results have more yellow than green, consider replacing the Node's antenna with one the following:

- Use a 2 dBi Omni dome antenna (model BWA-9O2-D) or a 5 dBi Omni antenna (model BWA-9O5-C)
- Use a 6 dBi Yagi (directional) antenna (model BWA-9Y6-A)

If the distance between devices is greater than 5,000 meters (3 miles) line-of-sight or objects, such as trees or man-made obstructions, interfere with the path, and the MISSED packet count exceeds 25 per 100 packets, consider the following steps:

- Install the antenna(s) remotely at a higher position (requires an antenna extension cable);

- Use a higher gain antenna;
- Decrease the distance between devices; or
- Use data radios to extend the position of the Gateway relative to the host system.

Performance Levels

Referenced omni-directional and directional antennas are listed at the end of this section.

Very strong signal strength is 100 green signals (displayed on the LCD) or eight flashes per second (models without LCDs). If the included 2 dBi OMNI antenna does not achieve this signal strength, use a different omni antenna, such as the 2 dBi dome antenna (same gain, different form factor) or 5 dBi antenna (higher gain). You may also use a low-gain directional antenna, such as the 6.5 dBd Yagi antenna.

Strong signal strength is represented by some green signals and some yellow signals (very few red signals and very few missed signals) or four flashes per second. To improve your radio performance, consider using a different omni antenna, such as the 2 dBi dome antenna, 5 dBi antenna, 6 dBi antenna, or 8 dBi antenna. You may also use a low-gain directional antenna, such as the 6.5 dBd Yagi antenna. We also recommend installing the antenna(s) remotely at a higher position. Additional antenna cables are available from Banner Engineering if needed.

Good or weak signal strength equals some yellow signals and a majority of red signals (very few green signals, a small number of yellow signals, and a small to medium number of missed signals) or one to two flashes per second. To improve your radio performance, consider using one of the 6 dBi or 8 dBi omni-directional antennas or the 10 dBd directional antenna. We also recommend installing the antenna(s) remotely at a higher position. Additional antenna cables are available from Banner Engineering if needed.

No radio communication is when more than 50% of the radio signals are missed or a solid amber LED. To improve radio performance, use a 8 dBi omni-direction antenna or a 10 dBd directional antenna and elevate the antenna above any obstructions. The lack of signals may also be due to the distance between the Gateway (master radio) and Nodes (remote radio). If this is the case, please contact Banner Engineering for further assistance. We also recommend installing the antenna(s) remotely at a higher position. Additional antenna cables are available from Banner Engineering if needed.

Omni-Directional (Omni) Antennas

BWA-9O2-D (2 dBi OMNI antenna, dome style)—For applications where a durable antenna is needed external to the radio enclosure.

BWA-9O5-C (5 dBi OMNI antenna with RP-SMA connector)—Antenna for medium antenna performance increase or to elevate the antenna above obstacles such as buildings or tall crops. We recommend using one of the following LMR200 extension cables (RP-SMA to RP-SMA):

- BWC-2MRSFRS3 (3 meters long)
- BWC-2MRSFRS6 (6 meters long)
- BWC-2MRSFRS9 (9 meters long)
- BWC-2MRSFRS12 (12 meters long)

BWA-9O6-AS (6 dBi OMNI antenna with Type N cable connector)— Antenna for strong antenna performance increase. Requires a RP-SMA to Type N converter cable (BWC-1MRSMN05). May require one of the following antenna extension cables:

- BWC-4MNFN3 (3 meters long)
- BWC-4MNFN6 (6 meters long)
- BWC-4MNFN15 (15 meters long)
- BWC-4MNFN30 (30 meters long)

Requires a surge suppression device (model BWC-LFNBMN-DC) if the antenna is external to a building, connected to other electronics, or elevated.

BWA-9O8-AS (8 dBi OMNI antenna with Type N cable connector)—Antenna for very strong antenna performance increase. Requires a RP-SMA to Type N converter cable (model BWC-1MRSMN05). May require one of the following antenna extension cables:

- BWC-4MNFN3 (3 meters long)
- BWC-4MNFN6 (6 meters long)
- BWC-4MNFN15 (15 meters long)
- BWC-4MNFN30 (30 meters long)

Requires a surge suppression device (model BWC-LFNBMN-DC) if the antenna is external to a building, connected to other electronics, or elevated.

Directional (Yagi) Antennas

BWA-9Y6-A (6.5 dBd YAGI antenna with Type N cable connector)—Antenna for strong, directional antenna performance. Requires a RP-SMA to Type N converter cable (model BWC-1MRSMN05). May require one of the following antenna extension cables:

- BWC-4MNFN3 (3 meters long)

- BWC-4MNFN6 (6 meters long)
- BWC-4MNFN15 (15 meters long)
- BWC-4MNFN30 (30 meters long)

Requires a surge suppression device (model BWC-LFNBMN-DC) if the antenna is external to a building, connected to other electronics, or elevated.

BWA-9Y10-A (10 dBd YAGI antenna with Type N cable connector)—Antenna for very strong, directional antenna performance increase. Requires a RP-SMA to Type N converter cable (model BWC-1MRSMN05). May requires one of the following antenna extension cables:

- BWC-4MNFN3 (3 meters long)
- BWC-4MNFN6 (6 meters long)
- BWC-4MNFN15 (15 meters long)
- BWC-4MNFN30 (30 meters long)

Requires a surge suppression device (model BWC-LFNBMN-DC) if the antenna is external to a building, connected to other electronics, or elevated.

4 Installing Your Sure Cross® Radios

Follow these recommendations to install your wireless network components.

4.1 Mounting Sure Cross Devices Outdoors

Use a Secondary Enclosure. For most outdoor applications, we recommend installing your Sure Cross devices inside a secondary enclosure. For a list of available enclosures, refer to the Accessories List (p/n b_3147091).

Point Away From Direct Sunlight. When you are not using a secondary enclosure, minimize the damaging effects of ultra-violet radiation by mounting the devices to avoid facing intense direct sunlight.

- Mount under an overhang or other source of shade,
- Install indoors, or
- Face the devices north when installing outside.

For harsh outdoor applications, consider installing your radio inside a secondary enclosure. For a list of available enclosures, refer to the Accessories List (p/n b_3147091).

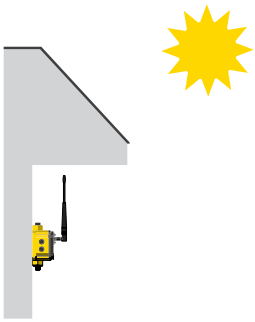

Mount Vertically to Avoid Collecting Rain. When possible, mount the devices where rain or snow will drain away from the device.

- Mount vertically so that precipitation, dust, and dirt do not accumulate on permeable surfaces.
- Avoid mounting the devices on flat or concave surfaces, especially if the display will be pointing up.

Remove Moisture and Condensation. If condensation is present in any device, add a small desiccant packet to the inside of the radio. To help vent the radios, Banner also sells a vented plug (model number **BWA-HW-031**) for the 1/2-inch NPT port of the Sure Cross radios.

4.1.1 Watertight Glands and NPT Ports

To make glands and plugs watertight, use PTFE tape and follow these steps.

1. Wrap four to eight passes of polytetrafluoroethylene (PTFE) tape around the threads as close as possible to the hexagonal body of the gland.
2. Manually thread the gland into the housing hole. Never apply more than 5 in-lbf of torque to the gland or its cable clamp nut. [4]

Seal any unused access holes with one of the supplied plastic plugs. To install a watertight plug:

1. Wrap four to eight passes of PTFE tape around the plug's threads, as close as possible to the flanged surface.
2. Carefully thread the plastic plug into the vacant hole in the housing and tighten using a slotting screwdriver. Never apply more than 10 in-lbf torque to the plastic plug.

If your device has an unused NPT port, install a watertight NPT plug:

1. Wrap 12 to 16 passes of PTFE tape evenly across the length of the threads.
2. Manually thread the plug into the housing port until reaching some resistance.
3. Using a crescent wrench, turn the plug until all the plug's threads are engaged by the housing port or until the resistance doubles. Do not over-tighten as this will damage the device. These threads are tapered and will create a waterproof seal without over-tightening.

[4] This is equivalent to the torque generated without using tools. If a wrench is used, apply only very light pressure. Torquing these fittings excessively damages the device.

4.2 Other Installation Requirements

Reduce Chemical Exposure—Before installing any devices in a chemically harsh environment, contact the manufacturer for more information regarding the life-expectancy. Solvents, oxidizing agents, and other chemicals will damage the devices.

Minimize Mechanical Stress—Although these radio devices are very durable, they are sophisticated electronic devices that are sensitive to shock and excessive loading.

- Avoid mounting the devices to an object that may be shifting or vibrating excessively. High levels of static force or acceleration may damage the housing or electronic components.
- Do not subject the devices to external loads. Do not step on them or use them as handgrips.
- Do not allow long lengths of cable to hang from the glands on the Gateway or Node. Cabling heavier than 100 grams should be supported instead of allowed to hang from the housing.
- Do not crack the housing by over-tightening the top screws. Do not exceed the maximum torque of 4 in-lbf.

It is the user's responsibility to install these devices so they will not be subject to over-voltage transients. Always ground the devices in accordance with local, state, or national regulations.

When Installing 1-Watt Radios—Notice: This equipment must be professionally installed. The output power must be limited, through the use of firmware or a hardware attenuator, when using high-gain antennas such that the +36 dBm EIRP limit is not exceeded.

4.3 Installation Quick Tips

The following are some quick tips for improving the installation of wireless network components.

4.3.1 Create a Clear Communication Path

Wireless communication is hindered by radio interference and obstructions in the path between the transmitter and receiver. To achieve the best radio performance, carefully consider the installation locations for the Gateways and Nodes and select locations without obstructions in the path.

For more information about antennas, please refer to the *Antenna Basics* reference guide, Banner document p/n 132113.

4.3.2 Increase the Height of the Antennas

Position the external antenna vertically for optimal RF communication. If necessary, consider changing the height of the Sure Cross radio, or its antenna, to improve reception. For outdoor applications, mounting the antenna on top of a building or pole may help achieve a line-of-sight radio link with the other radios in the network.

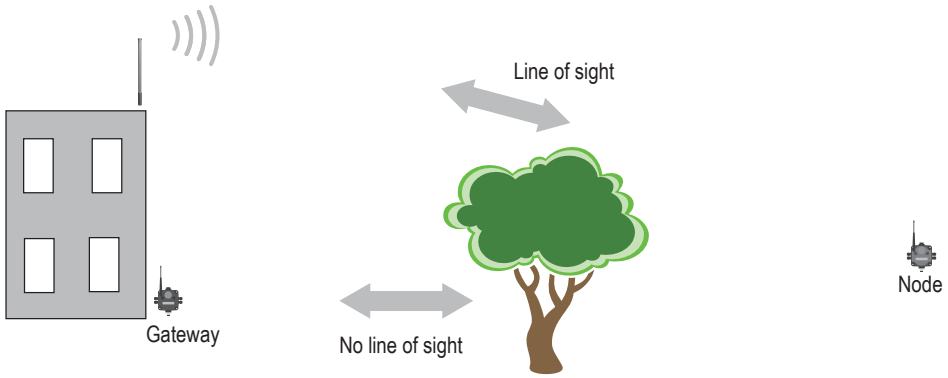

4.3.3 Collocated Radios

When the radio network's master device is located too close to another radio device, communications between all devices is interrupted. For this reason, always assign a unique Network ID to your wireless networks.

The Network ID (NID) is a unique identifier you assign to each wireless network to minimizes the chances of two collocated networks interfering with each other. Assigning different NIDs to different networks improves collocation performance in dense installations.

Do not install antennas within the minimum separation distance.

Antenna Minimum Separation Distance

900 MHz, 150 mW and 250 mW: 2 m (6 ft)
900 MHz, 1 Watt: 4.57 m (15 ft)
2.4 GHz, 65 mW: 0.3 m (1 ft)

4.3.4 Be Aware of Seasonal Changes

When conducting the initial Site Survey, the fewest possible missed packets for a given link is better. However, seasonal changes may affect the signal strength and the total signal quality. Radios installed outside with 50% missed packets in the winter months may have 80% or more missed packets in the summer when leaves and trees interfere with radio reception.

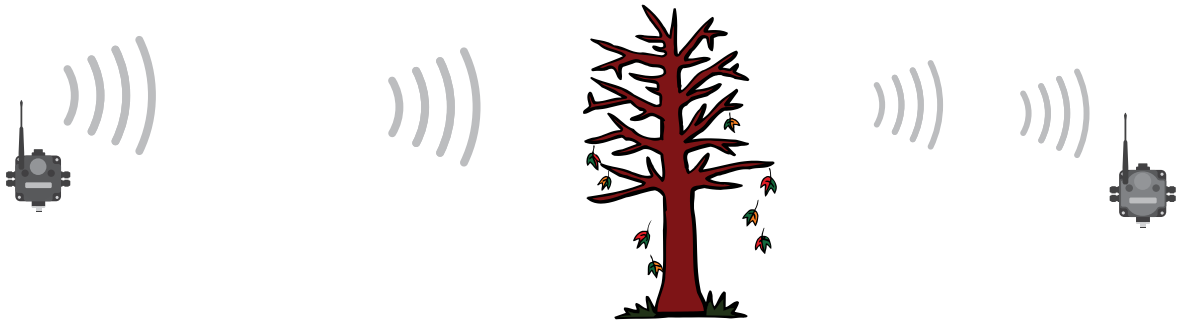

Figure 3. A good signal in winter doesn't always mean you will get the same signal strength the rest of the year.

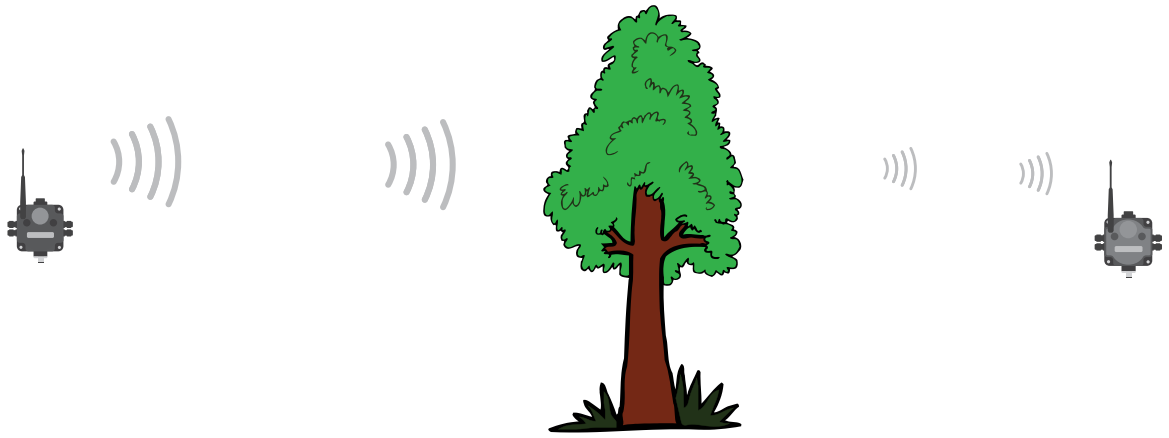

Figure 4. During spring and summer, leaves may block more of the radio signal.

4.4 Installing a Basic Remote Antenna

A remote antenna system is any antenna system where the antenna is not connected directly to the radio; coaxial cable connects the antenna to the radio.

When installing a remote antenna system, always include a lightning arrestor or coaxial surge suppressor in the system. Remote antenna systems installed without surge protection invalidate the warranty of the radio devices.

Surge suppressors should be properly grounded and mounted at ground level near where the cabling enters a building. Install the surge suppressor indoors or inside a weatherproof enclosure to minimize corrosion or component deterioration. For best results, mount the surge suppressor as close to the ground as possible to minimize the length of the ground connection and use a single-point ground system to avoid creating ground loops.

For more detailed information about how antennas work and how to install them, refer to Antenna Basics (p/n 132113.

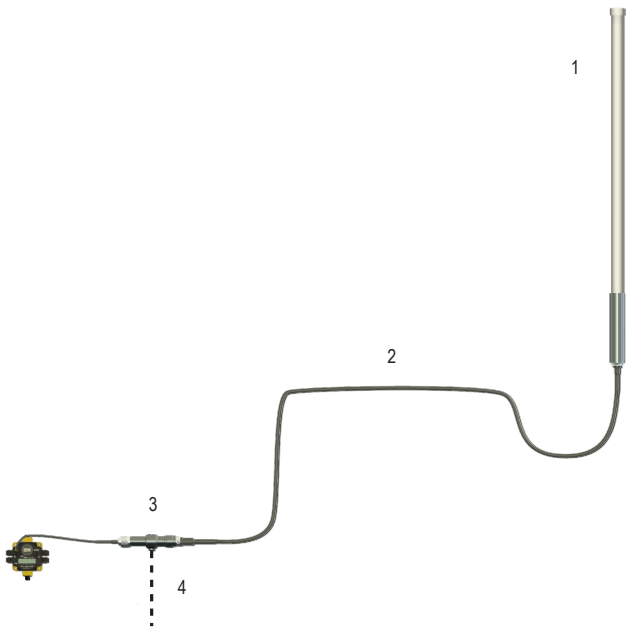

1. Antenna mounted remotely from the radio device.
2. Coaxial cable
3. Surge suppressor
4. Ground wire to a single-point ground system

I/O Isolation. When connecting analog and discrete I/O to external equipment such as VFDs (Variable Frequency Drives), it may be appropriate to install interposing relays and/or loop isolation devices to protect the DX80 unit from transients, noise, and ground plane interference originating from devices or the environment. Contact Banner Engineering Corp. for more information.

4.4.1 Weatherproof Remote Antenna Installations

Seal the connections with rubber splicing tape and electrical tape to prevent water damage to the cable and connections.

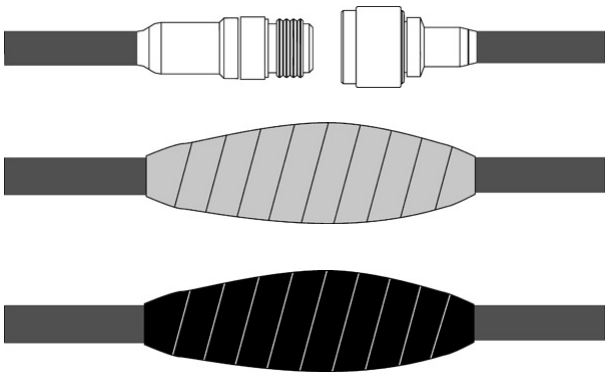

Step 1: Verify both connections are clean and dry before connecting the antenna cable to the antenna or other cable. Hand-tighten the cable connections.

Step 2: Tightly wrap the entire connection with rubber splicing tape. Begin wrapping the rubber splicing tape one inch away from the connection and continue wrapping until you are one inch past the other end of the connection. Each new round of tape should overlap about half the previous round.

Step 3: Protect the rubber splicing tape from UV damage by tightly wrapping electrical tape on top of the rubber splicing tape. The electrical tape should completely cover the rubber splicing tape and overlap the rubber tape by one inch on each side of the connection.

4.4.2 Installing Remote Antennas

Install and properly ground a qualified surge suppressor when installing a remote antenna system. Remote antenna configurations installed without surge suppressors invalidate the manufacturer's warranty. Keep the ground wire as short as possible and make all ground connections to a single-point ground system to ensure no ground loops are created. No surge suppressor can absorb all lightning strikes; do not touch the Sure Cross® device or any equipment connected to the Sure Cross device during a thunderstorm.

4.4.3 Mount a Dome Antenna to the Enclosure

Use a -D dome antenna when mounting an antenna directly to the outside of the enclosure.

1. Dome antenna
2. DIN rail and DIN rail bracket
3. Enclosure

The -D dome antennas come with an 18-inch RP-SMA extension cable connected to the antenna. Use this extension cable to connect the antenna directly to the radio.

To mount, drill a hole in the enclosure and insert the antenna.

Models	Description	List Price
BWA-9O2-D	Antenna, Omni, 900 MHz, 2 dBd, Dome, RP-SMA MALE Box mount, 18-inch antenna cable	$95
BWA-2O2-D	Antenna, Omni, 2.4 GHz, 2 dBd, Dome, RP-SMA MALE Box mount, 18-inch antenna cable	$95

4.4.4 Use an N-Type, Pole-Mounted Antenna

This antenna mounts remotely from the box, with the SureCross device mounted inside the box.

Ground the surge suppressor and antenna. Keep the ground wire as short as possible and make all ground connections to a single-point ground system to ensure no ground loops are created.

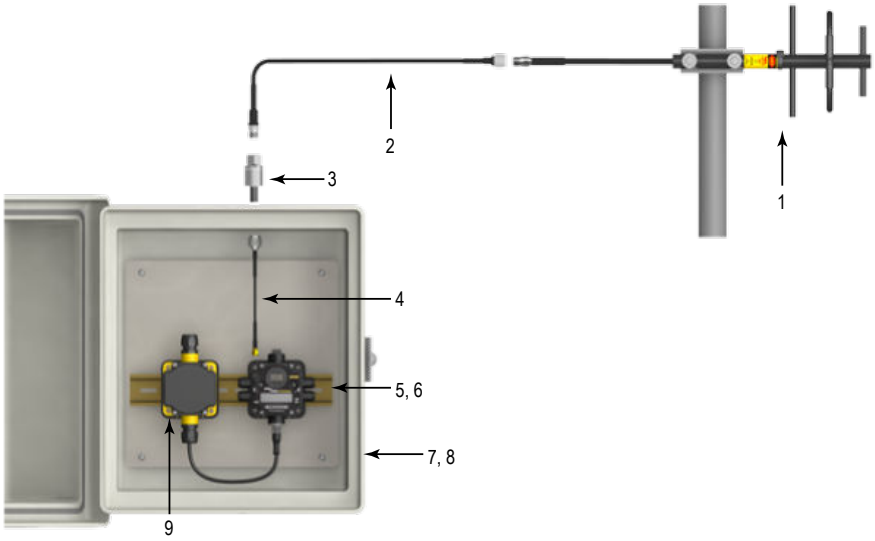

1. N-type Yagi antenna
2. N-Type to N-Type antenna cable
3. Surge suppressor
4. RP-SMA to N-Type male antenna cable
5 and 6. DIN rail and DIN rail bracket
7and 8. Enclosure and enclosure cover/plate, etc
9. Power supply

Directional (Yagi) Antennas with an N-Type Female Connection	
BWA-9Y6-A • 6.5 dBd, 6.8 × 13 inches Outdoor, 900 MHz • Datasheet: b_3145127	
BWA-9Y10-A • 10 dBd, 6.8 × 24 inches Outdoor, 900 MHz • Datasheet: b_3145130	

Omni-Directional Fiberglass Antennas with N-Type Female Connections	
BWA-9O6-A • 6 dBd, Fiberglass, Full wave, 71.5 inches, 900 MHz • Datasheet: b_314512	
BWA-2O8-A • 8.5 dBi, Fiberglass, 24 inches, 2.4 GHz • Datasheet: b_3145131	
BWA-2O6-A • 6 dBi, Fiberglass, 16 inches (shown), 2.4 GHz • Datasheet: b_3145117	
BWA-9O6-AS • 6 dBi, Fiberglass, 1/4 Wave, 23.6 inches (1.3 inch dia.), 900 MHz • Datasheet: b_3145125	
BWA-9O8-AS • 8 dBi, Fiberglass, 3/4 Wave, 63 inches (1.5 inch dia.), 900 MHz • Datasheet: b_3145126	

Use the LMR400 cables to connect the surge suppressor to the antenna.

N-Type to N-Type Cables—LMR400 Type			
Model	Length (m)	Description	
BWC-4MNFN3	3	LMR400 N-Type Male to N-Type Female	
BWC-4MNFN6	6		
BWC-4MNFN15	15		
BWC-4MNFN30	30		

Surge Suppressors	
BWC-LMRSFRPB • Surge Suppressor, Bulkhead, RP-SMA Type • RP-SMA to RP-SMA	BWC-LFNBMN-DC • Surge Suppressor, bulkhead, N-Type, DC Blocking • N-Type Female, N-Type Male

Use the RP-SMA to N-Type male cables to connect the radio to the surge suppressor.

RP-SMA to N-Type Cables—LMR200 Type			
Model	Length (m)	Description	
BWC-1MRSMN05	0.5	LMR200 RP-SMA to N-Type Male	
BWC-1MRSMN2	2		

5 Advanced Setup Options

Refer to the following sections for advanced setup instructions or additional information on Banner's Sure Cross® wireless technology and its uses.

5.1 DX80 Menu Structure

The Gateways and Nodes each have their own menu structure and options.

5.1 DX80 Gateway Set-up Menu

When power is applied, the DX80 begins running. The display screen auto loops through the RUN menu and communication begins between the Gateway and Node(s). Auto looping through the RUN menu is the normal operating mode for all devices on the wireless network.

From the RUN Menu (or any menu), single-click button 1 to advance through the top-level menus. The device auto display loops through the menu options if either of the RUN, DINFO, or FCTRY menus are selected. If the device is paused on the SITE, DVCFG, or DERR menu options, the display does not auto loop.

To enter manual scrolling mode, double-click button 2 at the top level menu. Use the instructions shown in the chart below to navigate the menu system. To return to the top level menus and auto display loop mode, double-click button 2 twice.

The * before the menu name indicates a top-level menu option. The () indicate submenu items.

When using Rotary Dial Addressing Mode, use the left rotary dial to set the Network ID (NID). Once changed, allow five seconds for the devices to update to the new Network ID.

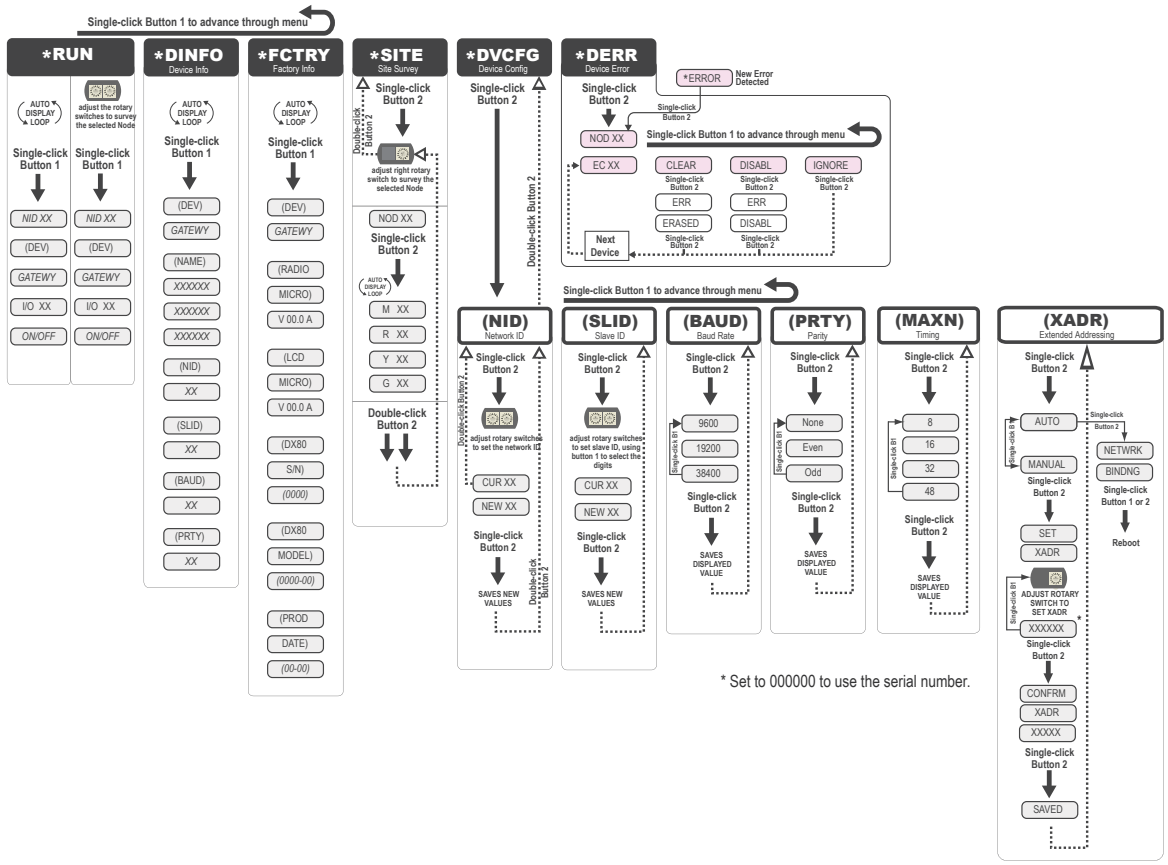

5.1 DX80 Node Set-up Menu

When power is applied, the DX80 begins running. The display screen auto loops through the RUN menu and communication begins between the Gateway and Node(s). Auto looping through the RUN menu is the normal operating mode for all devices on the wireless network.

From the RUN Menu (or any menu), single-click button 1 to advance through the top-level menus. The device auto display loops through the menu options if either of the RUN, DINFO, or FCTRY menus are selected. If the device is paused on the DVCFG or DERR menu options, the display does not auto display loop.

To enter manual scrolling mode, double-click button 2 at the top level menu. Use the instructions shown in the chart below to navigate the menu system. To return to the top level menus and auto display loop mode, double-click button 2 twice.

Node LCD Timeout: After 15 minutes of inactivity, the LCD screen stops displaying information. Press any button to refresh the display if the Node has entered this energy-saving mode.

The * before the menu name indicates a top-level menu option. The () indicate submenu items.

When using Rotary Dial Addressing Mode, use the rotary dials to set the Network ID (NID) and Device ID (NADR) at any time. The left rotary dial sets the Network ID and the right rotary dial sets the Node Address. Once changed, allow five seconds for the devices to update to the new Network ID.

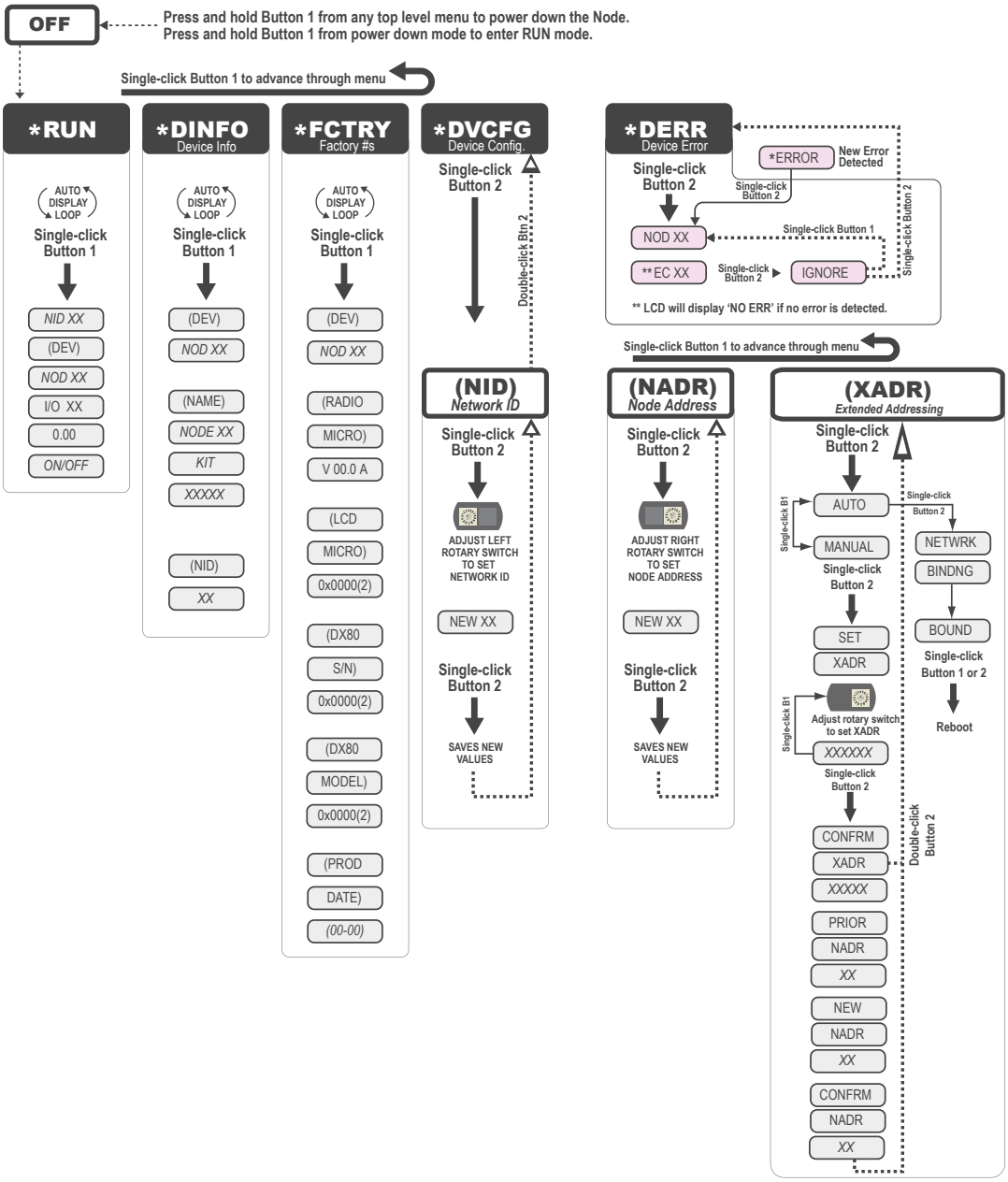

5.1.1 RUN Menu

The RUN menu displays the network ID (NID), device name (Gateway or Node), and the I/O values of the device.

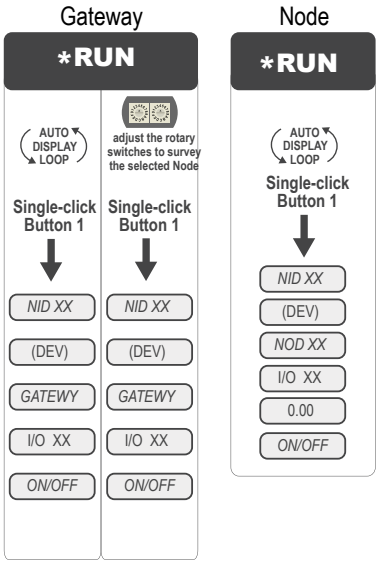

On the Gateway, the I/O displayed may be the I/O of the Gateway or of a selected Node. To view the I/O of a specific Node, set the position of the rotary dials to the Node's address. For example, to view the I/O of Node 12, set the Gateway's left rotary dial to 1 and the right rotary dial to 2.

When using extended address mode, the network ID (NID) is not used. The Network ID is typically used only in rotary dial address mode.

5.1.2 DINFO (Device Information) Menu

The DINFO menu displays some device-specific information.

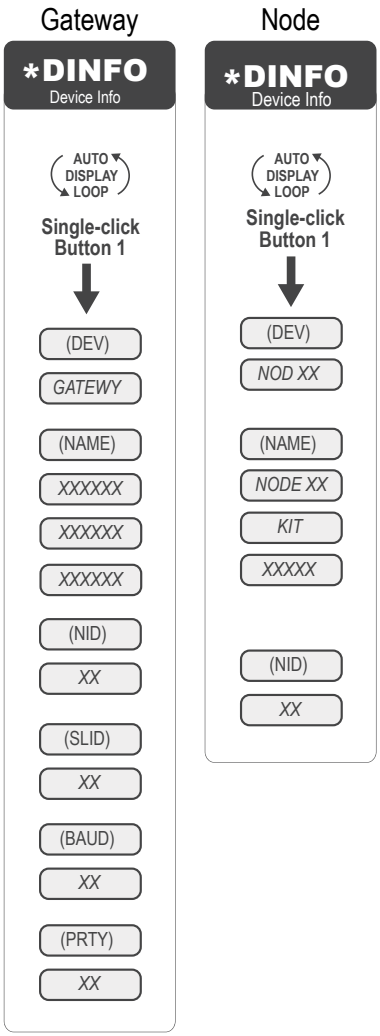

On the Gateway, the DINFO menu displays the device name, the network ID (NID), slave ID, baud rate, and parity. When in extended address mode, the DINFO menu also displays the maximum Node setting and the extended addressing (XADR), or binding, code used to form the network.

On the Node, the DINFO menu displays the device type including the Node address, the device name, and the network ID (NID).

When using extended address (binding) mode, the network ID value is no longer used by the devices. This number is not the extended address (binding) code.

5.1.3 FCTRY (Factory) Menu

The FCTRY menu displays the version numbers of various components within the device, including the radio micro number, the LCD number, the device's serial number, the device's model number, and the production date.

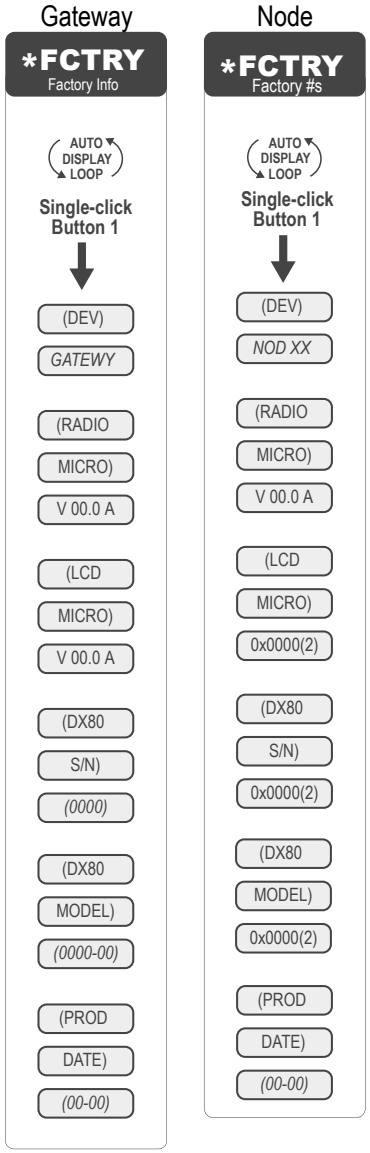

If you call Banner Engineering for technical support, having this information available may help diagnose your particular problem.

5.1.4 SITE (Site Survey) Menu

The SITE menu displays the results of a Site Survey conducted with this Gateway.

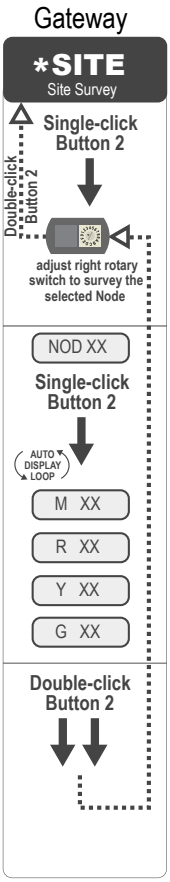

The SITE menu displays the device number of the Node the Site Survey was conducted with as well as the missed, green, yellow, and red received packet count.

The SITE menu is only available on the Gateways.

To access the SITE menu, single-click button 1 to scroll across the menu levels until reaching the Site Survey (SITE) menu.

See Conduct a Site Survey Using the Menu System on p. 16.

See Interpreting the Site Survey Results on p. 19.

5.1.5 DVCFG (Device Configuration) Menu

On Gateways, the DVCFG menu allows users to set various device-specific parameters, including the network ID (NID), slave ID (SLID), baud rate, and parity. In extended address mode, use this menu to also set the maximum number of radio devices (MAXN) within the network and the extended address binding code (XADR).

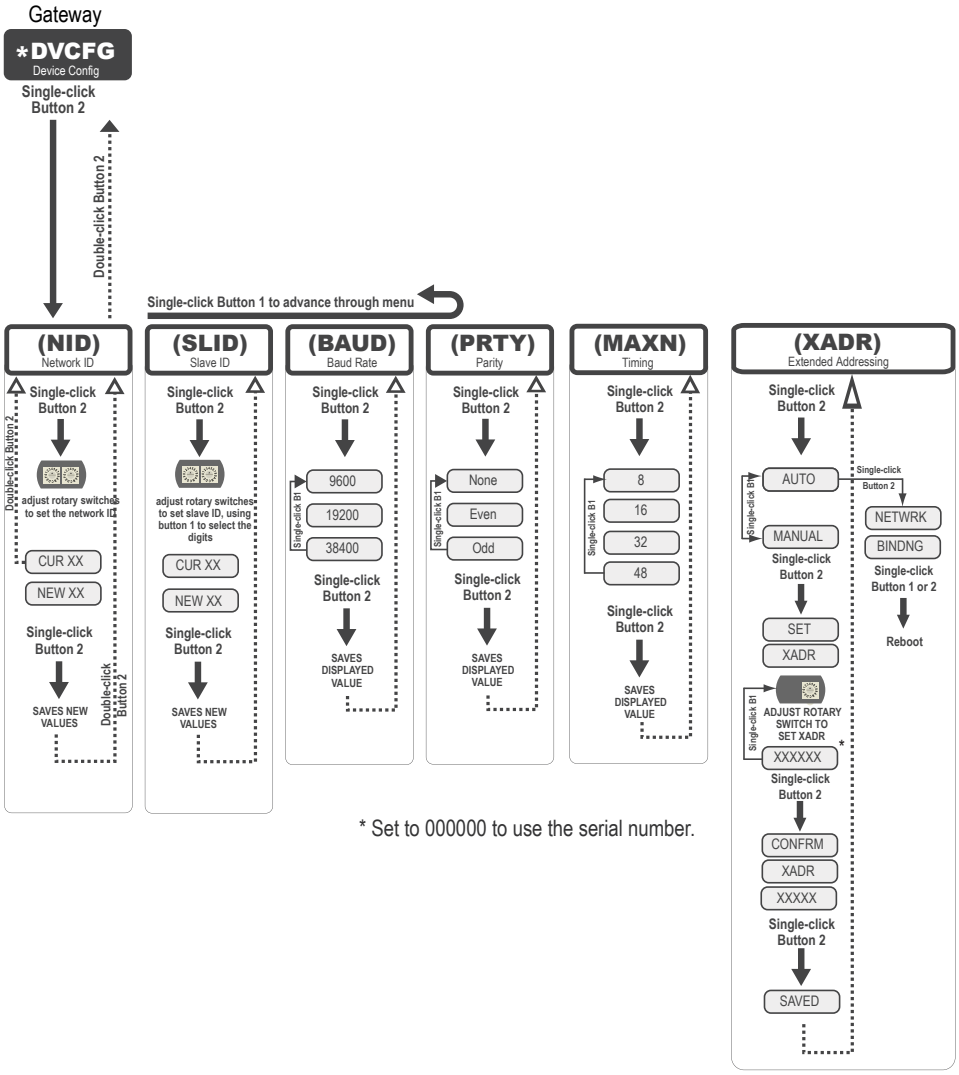

* Set to 000000 to use the serial number.

- **Baud and Parity**. The options for baud rate are: 19200, 38400, or 9600. For parity, select None, Even, or Odd.
- **Extended Address (Binding) Code**. Binding Nodes to a Gateway ensures the Nodes only exchange data with the Gateway they are bound to. After a Gateway enters binding mode, the Gateway automatically generates and transmits a unique extended addressing (XADR), or binding, code to all Nodes within range that are also in binding mode. The extended addressing (binding) code defines the network, and all radios within a network must use the same code.
- **Max Nodes**. Selecting the maximum number of system radio devices (Gateway and all Nodes) changes the timing for the wireless network. For example, if you are running four Nodes in your wireless network, set the system's maximum device count to 8. This allows up to 8 radio devices, including the Gateway, in the wireless network and offers the highest throughput, 62.5 milliseconds, for each Node. The choices are 8, 16, 32, and 48 devices.
- **Network ID**. The Network ID (NID) is a unique identifier you assign to each wireless network to minimizes the chances of two collocated networks interfering with each other. Assigning different NIDs to different networks improves collocation performance in dense installations.
- **Slave ID**. The slave ID is an identifying number used for devices within a Modbus system. When using more than one Modbus slave, assign each slave a unique ID number.

On Nodes, use the DVCFG to set the network ID (NID) and extended address binding code (XADR). The Node address (NADR), also referred to as a Node ID or device address, is only functional on some models.

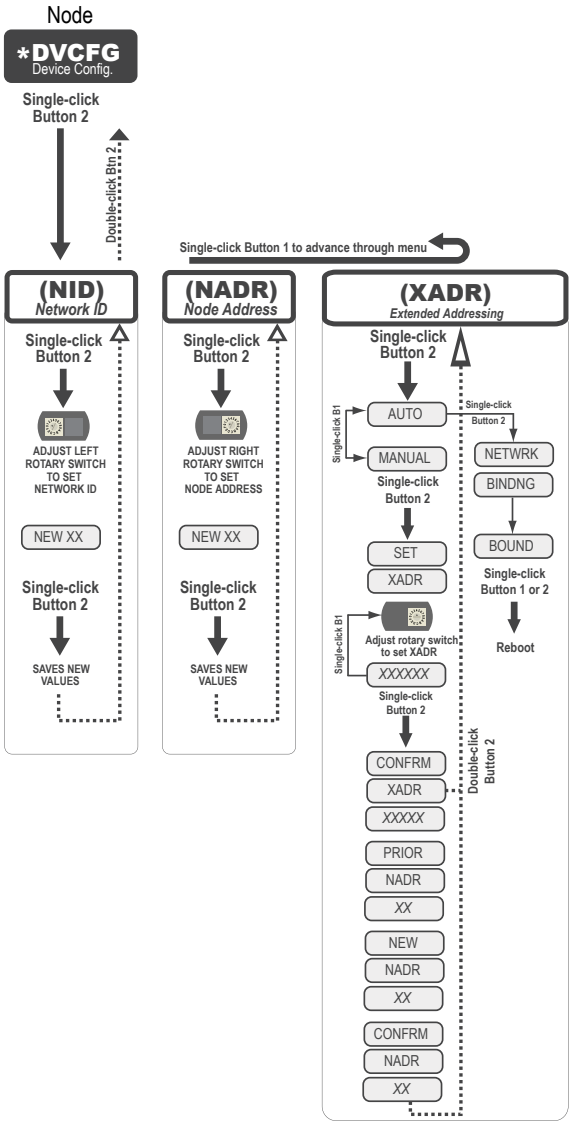

5.1.6 DERR (Device Error) Menu

Use the DERR menu to manage device error messages.

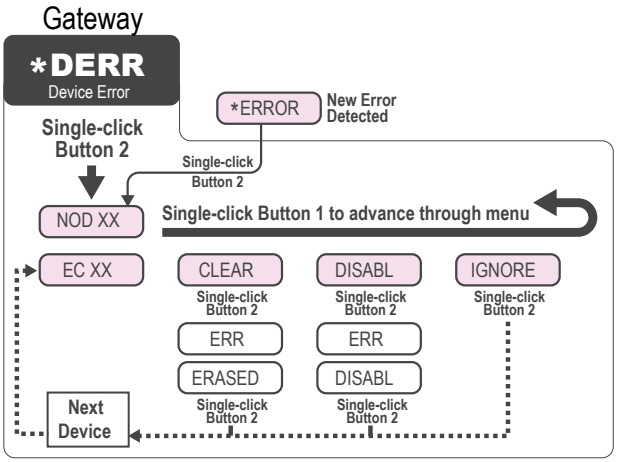

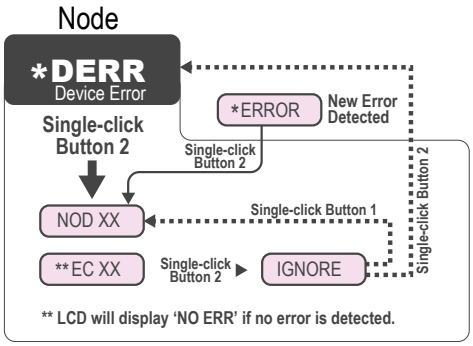

On the Gateway use the DERR menu to clear, disable, or ignore error messages generated by devices within the network. The Node number that generated the error and the error code (EC) display onscreen. Single-click button 1 to advance through the menu of CLEAR (clear this particular instance of the error from the system), DISABL (disable this particular error from appearing from this specific Node), and IGNORE (ignore this error but do not remove it from the system). After the error messages for a Node are cleared, disabled, or ignored, errors for any additional Nodes display on the Gateway's LCD.

On the Node use the DERR menu to view and ignore error messages for that Node.

5.2 Web-based Configuration for the GatewayPro on DX83

The Sure Cross wireless systems are configured using an Ethernet network connection and a common Web page browser. An Ethernet connection can be established from a GatewayPro or from a DX83 Ethernet Bridge serially connected to the Gateway.

The Ethernet Bridge and GatewayPro each ship with an Ethernet crossover cable. One end of the cable is a RJ45 connector and the other end is an industrial Ethernet connector. This cable is designed to be connected directly to a computer.

Example Layout #1—When connecting a Gateway to a host system, the wireless network must be configured using the User Configuration Tool (UCT). When you are not using a GatewayPro or Ethernet Bridge, you cannot configure the wireless network using the Web Configurator.

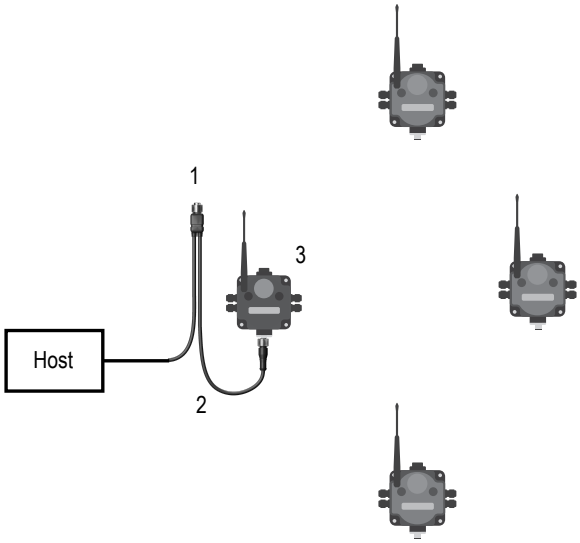

1. Power connection
2. Splitter cable and Modbus RTU communication
3. Gateway

Example Layout #2—This system uses a GatewayPro connected directly to a host system using an Ethernet crossover cable. This system can be configured using the web pages.

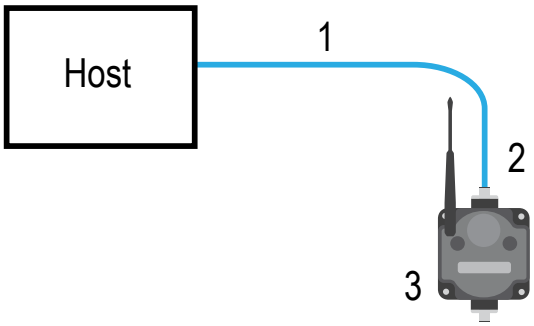

1. Ethernet crossover cable using the Modbus/TCP or EtherNet/IP™ communication protocol
2. Industrial Ethernet connection
3. GatewayPro

Example Layout #3—This example system layout may also be configured using the web pages. Instead of using a GatewayPro to connect to the host system, a Gateway and Ethernet Bridge is used to achieve the same function. In this configuration, the Gateway is Modbus Slave 1.

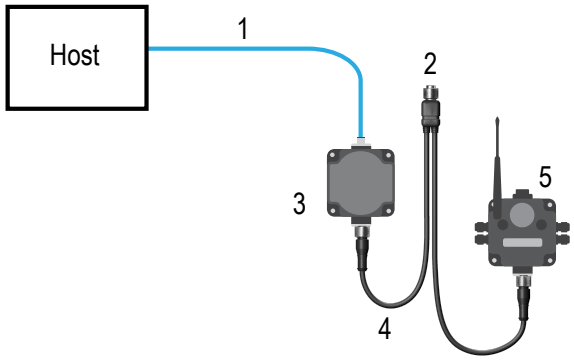

1. Ethernet crossover cable using the Modbus/TCP or EtherNet/IP communication protocol
2. Power connection
3. DX83 Ethernet Bridge
4. Splitter cable CSRB-M1250M125.47M125.73 using Modbus RTU
5. Gateway

Typically, the Modbus RTU connection at a GatewayPro is not used because the GatewayPro contains a master and slave device. The Modbus RTU factory default settings for a standard Gateway are: 19200 baud; 8 data bits; No stop bits; 1 parity bit; Modbus Slave ID 1.

5.2.1 Accessing the Web-based Configuration Screens

The configuration Web pages are served from the DX83 Ethernet Bridge or GatewayPro and are accessed using any Internet browser.

Before accessing the Web-based configuration screens, configure the browser for a direct connection to the Internet. If you are experiencing problems connecting, verify the browser is not set to use a proxy server. Use a crossover Ethernet cable when connecting directly from a host computer to the DX83 Ethernet Bridge or GatewayPro; use a standard Ethernet cable when connecting through a switch or Ethernet hub.

The factory default IP address for the DX83 Ethernet Bridge or GatewayPro is: 192.168.0.1 To change the default IP address, set up the host PC with an IP address different from the Ethernet Bridge or GatewayPro IP addresses. (Refer to Banner document p/n 133116 for detailed instructions on setting up the host computer's network IP address.) For example, change the PC host IP address to: 192.168.0.2. To access the configuration screens, follow these steps.

1. Open a Web browser and log into the Ethernet Bridge or GatewayPro by typing the IP address in the browser location window: http://192.168.0.1.

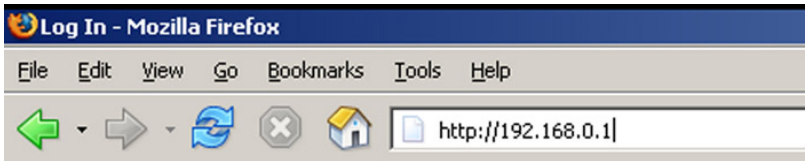

   The Web home page for the Ethernet Bridge or GatewayPro displays.
2. Click on any tab at the top of page to log into the configuration software.

3. Enter `system` as the user name and `admin` as the password.

After making your changes and saving the file, close the browser to log out of the configuration system.

5.2.2 Changing the IP Address

Use the page tabs at the top of the page to select the hierarchical path: **System** > **Setup** > **Network** . To change the IP address, type in the new IP address and click the Change IP button. The IP address change activates when the Ethernet Bridge or GatewayPro reboots (cycles power).

Important: Verify the new IP address is correct before cycling power to the device. After the IP address is changed, you must enter in the new IP address to access the Web page-based configuration screens. Write down the new IP address (and any other changed parameters on this screen) or print this page and file for your record.

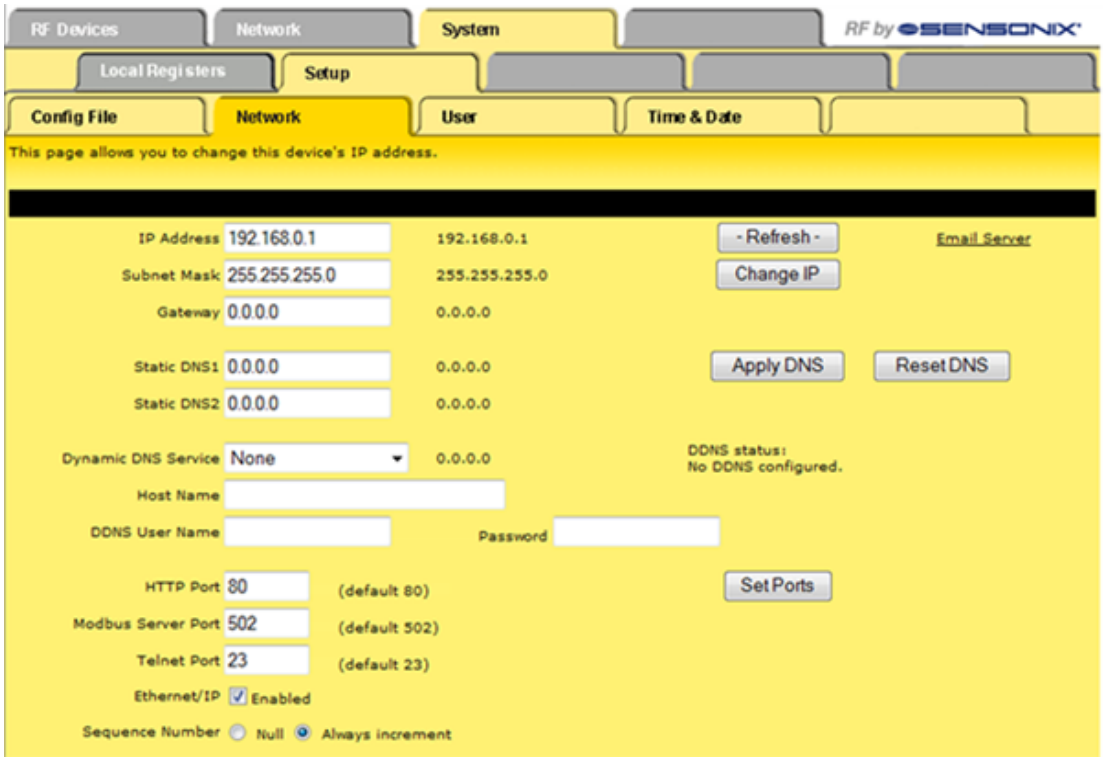

5.3 Binding Mode: What does it do?

Binding Nodes to a Gateway ensures the Nodes only exchange data with the Gateway they are bound to. After a Gateway enters binding mode, the Gateway automatically generates and transmits a unique extended addressing (XADR), or binding, code to all Nodes within range that are also in binding mode. The extended addressing (binding) code defines the network, and all radios within a network must use the same code.

After binding your Nodes to the Gateway, make note of the binding code displayed under the ***DVCFG** > **XADR** menu on the Gateway's LCD. Knowing the binding code prevents having to re-bind all Nodes if the Gateway is ever replaced.

5.3.1 Automatic Binding Using the Menu Navigation

The easiest way to bind the Gateway to its Nodes is by triple clicking button 2 to enter automatic binding mode. If you would prefer to begin automatic binding mode using the menu structure instead of the buttons, follow these steps.

Before making any changes to the DIP switches, disconnect the power to the devices. For devices with batteries integrated into the housing, remove the battery.

1. **On the Gateway:** remove the top cover.
2. Move DIP switch 1 to the ON position.
   Extended Addressing Mode is activated using DIP switch 1.
3. Apply power to the Gateway.
   The Gateway's LCD displays POWER, then *RUN.
4. On the Gateway, single click button 1 to advance across the menus, stopping at the DVCFG menu.
   The Gateway's LCD displays (DVCFG).
5. Single click button 2 to select DVCFG. Single click button 1 to select from the available menu options, stopping at XADR.
   The Gateway's LCD displays (XADR).
6. Single click button 2 to enter XADR mode. When the display reads (AUTO), single click button 2 again to begin the automatic binding mode.

The LEDs flash alternately when the Gateway is in binding mode. Any Node entering binding mode will bind to this Gateway. The Gateway's LCD displays NETWRK BINDNG.

7. **On the Node:** remove the top cover.
8. Move DIP switch 1 to the ON position.
   Extended address mode is activated using DIP switch 1.
9. Apply power to the Node.
   The Node's LCD displays POWER, then *RUN.
10. On the Node, single click button 1 to advance across the menus, stopping at the DVCFG menu.
    The Node's LCD displays (DVCFG).
11. Single click button 2 to enter the DVCFG menu.
12. Single click button 1 to select from the available submenu options, stopping at XADR.
    The Node's LCD displays (XADR).
13. Single click button 2 to enter the XADR submenu.
14. When the display reads (AUTO), single click button 2 to begin the automatic binding mode.
    The Node enters binding mode. The Node's LCD displays NETWRK BINDNG. When the Node is bound, the LEDs are both solid red for a few seconds. The Node cycles its power, then enters RUN mode.
15. Use both of the Node’s rotary dials to assign a decimal Node address between 01 and 47.

The left rotary dial represents the tens digit (0–4) and the right dial represents the ones digit (0–9) of the device address.

16. Repeat steps 7 through 15 for each additional Node that needs to communicate to that Gateway.
17. **On the Gateway:** single click button 1 or button 2.
    When button 1 or 2 is pressed, the Gateway exits binding mode and reboots. The Gateway's LCD displays POWER, then *RUN.

For devices with batteries integrated into the housing, remove the battery for one minute to cycle power to the device. After making any changes to DIP switch settings, you must cycle power to the device or the DIP switch changes will not be recognized.

5.3.2 Bind Radios Using Modbus Commands

Use Modbus commands to bind Nodes to a Gateway when the Node does not have rotary dials.

Apply power to the Gateway and Nodes.

1. Write 0x01*NN* (hex) to the Gateway's register 6371; where *NN* is the Node's ID number in hex.

Value to write to register 6371		Action
Decimal	Hex	
256	0x0100	The Gateway enters binding mode and does not assign a Node ID (used with Nodes that get their ID from the rotary dials).
256	0x0101	The Gateway enters binding mode and assigns the Node that enters binding mode to ID 1
261	0x0105	The Gateway enters binding mode and assigns the Node that enters binding mode to ID 5
291	0x0123	The Gateway enters binding mode and assigns the Node that enters binding mode to ID 35

   The LEDs flash alternately when the Gateway is in binding mode.

2. Enter binding mode on the Node.
   - If you have a two-button Node, triple-click button 2.
   - If you have a one-button Node, triple-click the button.
   - If you have a Node with no buttons, remove the top cover and set both the left and right rotary dials to F to enter binding mode.

   The Node enters binding mode and locates the Gateway in binding mode.

   For two LED Nodes, the red LEDs flash alternately. After binding is complete, both LEDs are both solid red for a few seconds.

For one-LED Nodes, the red and green LED flashes alternately while the Node searches for the Gateway. After binding is complete, the LED is red and green for four seconds (looks amber), then the red and green flash simultaneously (looks amber) four times.

The Node automatically exits binding mode, cycles its power, then enters RUN mode, using the Node ID the binding process just assigned to it.

3. Repeat steps 1 and 2 for all Nodes that will communicate to this Gateway.
4. Write 0x0000 (hex) to the Gateway's register 6371 to stop the binding procedure.

For more information about using Modbus commands, refer to Host Controller Systems instruction manual (p/n 132114).

5.4 Setting the Network ID in Extended Addressing Mode

Use the menu system to set the Network ID when using extended address mode.

1. From the top level menus, single-click button 1 to advance through the menus, stopping at DVCFG (Device Configuration).
   The Gateway's LCD displays *DVCFG
2. Single-click button 2 to enter the DVCFG menu options and stop at (NID).
   The Gateway's LCD displays (NID)
3. Single-click button 2.
   Enters the (NID) menu option.
4. Using both rotary dials on the Gateway, select a Network ID. The left rotary dial acts as the left digit and the right rotary dial acts as the right digit of the Network ID. In extended addressing mode, the Network ID can only be set from the rotary dials while in the (NID) menu.

   Any Nodes bound to this Gateway ‘follow’ the Gateway to the new Network ID automatically. The current Network ID and the new Network ID display on the LCD panel.
5. Single-click button 2.
   Saves the new values.
6. Double-click button 2.
   Exits this submenu and the LCD displays (NID).
7. Double-click button 2.
   Exits to the main menu system and returns to RUN mode. The LCD displays *DVCFG.

5.5 Manually Assign a Binding Code to a Gateway

Manually assign the binding code (XADR) when replacing components of an existing wireless network.

To determine the existing binding code, access the DINFO (Device Information) menu of either the existing Gateway or another Node in the network. Follow the submenu structure to the XADR display for that device.

1. Apply power to the Gateway.
   The Gateway’s LCD shows POWER, then RUN.
2. On the Gateway, single click button 1 to advance across the menus, stopping at the DVCFG menu.
   The Gateway’s LCD shows (DVCFG).
3. Single click button 2 to select DVCFG. Single click button 1 to select from the available menu options, stopping at XADR.
4. Single click button 2 to enter the XADR menu.
   AUTO is automatic binding mode and uses the Gateway’s serial number as the binding code.
5. Single click button 1 to select manual mode.
6. Single click button 2 to enter manual mode.
   MANUAL allows the user to manually enter an binding code.
7. Single click button 2 to advance to the binding code entry step.
   After entering manual mode, use the right rotary dial to select the digits of the binding code. The LCD shows SET XADR 000000.

8. Use the right rotary switch to begin setting the binding code. Digit selection begins with the left most digit. After selecting the first digit, single click button 1 to advance right to the next digit. All six digits must be filled, even if it is with leading zeros. For example, to use 2245 as the code, enter 002245 into the device.
   To use the Gateway's serial number, enter 000000 as the binding code.
9. Continue entering the code using a single click of button 1 to advance from left to right.
   After reaching the sixth digit, the curser returns to the first digit.
10. Single click button 2 when code entry is complete.
    The Gateway LCD displays the entered value for confirmation by showing CONFRM XADR, then repeating back your value.
11. Single click button 2 to save the code and exit the XADR menu.

When entering the binding code, the digits auto fill with whatever position the rotary switch is currently in. For example, after entering the 00 part of the binding code 002245, the third digit auto fills with a 0 until the rotary dial is rotated to 2.

After manually changing the binding code on a Gateway in an existing network, change the binding code for all Nodes in that network by either manually setting the code on all Node(s) or by beginning the automatic binding sequence on the Gateway and auto-binding all the Node(s).

5.6 Manually Assign a Binding Code to a Node

Manually assign the binding code when replacing components of an existing wireless network.

To determine the existing binding code, access the DINFO (Device Information) menu of either the existing Gateway or another Node in the network. Follow the submenu structure to the XADR display for that device.

1. Apply power to the Node.[5]
   The LCD displays POWER, then RUN.
2. On the Node, single click button 1 to advance across the menus, stopping at the DVCFG menu.
3. Single click button 2 to select DVCFG. Single click button 1 to select from the available menu options, stopping at XADR.
4. Single click button 2 to enter the XADR menu.
   AUTO is automatic binding mode and uses the Gateway's serial number as the binding code.
5. Single click button 1, stopping at manual mode.
   MANUAL allows the user to manually enter a binding code.
6. Single click button 2 to enter manual mode.
7. Single click button 2 to enter the binding code entry step.
   The LCD shows SET XADR 000000.
8. Use the right rotary switch to begin setting the binding code. Digit selection begins with the left most digit. After selecting the first digit, single click button 1 to advance right to the next digit. All six digits must be filled, even if it is with leading zeros. For example, to use 2245 as the code, enter 002245 into the device.
9. Continue entering the code using a single click of button 1 to advance from left to right.
   After reaching the sixth digit, the curser returns to the first digit.
10. Single click button 2 when code entry is complete. The Node LCD displays the entered value for confirmation.
    The LCD shows CONFRM XADR XXXXXX.
11. If the rotary dial hasn't been returned to the previous Node address (device address or ID), the LCD displays the prior setting as a reminder. Return the rotary dial to its previous Node address.
12. The new Node address setting displays (NEW NADR XX).
13. The Node confirms the new Node address by displaying CONFRM NADR XX.
14. Double click button 2 to exit the XADR menu and to return to RUN mode.

When entering the binding code, the digits auto fill with whatever position the rotary switch is currently in. For example, after entering the 00 part of the binding code 002245, the third digit auto fills with a 0 until the rotary dial is rotated to 2.

5.7 Setting the Maximum System Devices

To set the maximum number of devices in your system, use the MAXN submenu, located under the *DVCFG (Device Configuration) menu.

Selecting the maximum number of system radio devices (Gateway and all Nodes) changes the timing for the wireless network. For example, if you are running four Nodes in your wireless network, set the system's maximum device count to 8. This allows up to 8 radio devices, including the Gateway, in the wireless network and offers the highest throughput, 62.5 milliseconds, for each Node. The choices are 8, 16, 32, and 48 devices.

[5] For devices with batteries integrated into the housing, remove the battery for one minute to cycle power to the device.

5.8 Storage and Sleep Modes

Storage Mode (applies to battery-powered models only)—While in **storage mode**, the radio does not operate. All Sure Cross® radios powered from an integrated battery ship from the factory in storage mode to conserve the battery. To wake the device, press and hold button 1 for 5 seconds. To put any *Flex*Power® or integrated battery Sure Cross radio into storage mode, press and hold button 1 for 5 seconds. The radio is in storage mode when the LEDs stop blinking, but in some models, the LCD remains on for an additional minute after the radio enters storage mode. After a device has entered storage mode, you must wait 1 minute before waking it.

Sleep Mode (applies to both battery and 10–30 V DC powered models)—During normal operation, the Sure Cross radio devices enter **sleep mode** after 15 minutes of operation. The radio continues to function, but the LCD goes blank. To wake the device, press any button.

5.9 Modbus Holding Registers

There are sixteen Modbus holding registers for each device. Calculate the holding register number for each device using the equation: `Register number = I/O# + (Node# × 16).`

The Gateway is always device 0 and the Gateway's holding registers are registers 1 through 16. Registers for Node 1 are 17 through 32. Although only seven Nodes are listed, the registers continue for as many Nodes as are in the network. For example, the register number for Node 10, I/O point 15, is 175.

Table 1: Modbus Holding Registers

I/O Point	Gateway	Node 1	Node 2	Node 3	Node 4	Node 5	Node 6	Node 7
1	1	17	33	49	65	81	97	113
2	2	18	34	50	66	82	98	114
3	3	19	35	51	67	83	99	115
4	4	20	36	52	68	84	100	116
5	5	21	37	53	69	85	101	117
6	6	22	38	54	70	86	102	118
7	7	23	39	55	71	87	103	119
8	8	24	40	56	72	88	104	120
9	9	25	41	57	73	89	105	121
10	10	26	42	58	74	90	106	122
11	11	27	43	59	75	91	107	123
12	12	28	44	60	76	92	108	124
13	13	29	45	61	77	93	109	125
14	14	30	46	62	78	94	110	126
15	15	31	47	63	79	95	111	127
16	16	32	48	64	80	96	112	128

5.10 Modbus Communication Parameters

To access the Modbus device, you may first need to configure system-level communication parameters on the Gateway.

The following procedures are necessary to change the Gateway's slave ID, baud rate, and parity. Setting up the Network and Device IDs, powering up the devices, and conducting the Site Survey for a host-connected network is the same as for the non-host DX80 or DX80 Performance wireless system. All device I/O for the network is accessed using the host/master device.

Parameter	Default Value	Description
Slave ID	1	Defines the slave number (01–99) for the serial Modbus RTU protocol. When operating more than one network with a Modbus Master device, change the Slave IDs.

Parameter	Default Value	Description
Baud Rate	19200	Defines communication data rate (19.2, 38.4, or 9.6 kbps) between the Gateway and the Host through the serial interface.
Parity	None	Defines serial parity (none, even, or odd) between Gateway and Host.

5.10.1 Set the Slave ID on a DX80 Gateway

By default, all Gateways are set to Modbus Slave ID 1.

To change the Slave ID on the Gateway, follow these steps.

1. Single-click button 1 to advance between menus. Stop when you reach the DVCFG menu.
2. Press button 2 once at the *DVCFG menu to enter the Device Configuration menu.
3. Press button 1 to advance through the items in the *DVCFG menu. Stop advancing when you've reached the setting for the slave ID (SLID).
   The screen is displaying (SLID).
4. Press button 2 once to enter the slave ID (SLID) submenu.
   The screen displays the current slave ID number.
5. Press button 1 to advance across the three digit slave ID while using the right rotary dial to select the number. To make a change, rotate the right rotary dial to zero, then to the desired number.
   As you press button 1 to select the digit, the digit changes to reflect the position of the right rotary dial. To set the slave ID to 3, the display should read 003.
6. Press button 2 once to save your current setting.
   The display reads SAVED.
7. Double-click button 2 to exit the *DVCFG menu.
8. If using a Network ID (NID), adjust both rotary switches back to the NID value.
   To avoid losing the network connection between the Gateway and Nodes, reset the rotary switches back to their appropriate values before leaving the *DVCFG sub-menus. If the Gateway and Nodes lose their connection, the network may take up to 20 seconds to re-synchronize.
9. Double-click Gateway push button 2 to return to the Device Configuration (*DVCFG) menu.
10. Click Gateway push button 1 until reaching the *RUN menu option.

5.10.2 Set the Baud Rate

The baud rate establishes the communication rate between the Gateway and the host system to which it is wired.

1. Single-click button 1 to advance between menus. Stop when you reach the DVCFG menu.
2. Press button 2 once at the *DVCFG menu to enter the Device Configuration menu.
3. Press button 1 to advance through the items in the *DVCFG menu. Stop advancing when you've reached the setting for the BAUD rate.
4. Single-click Gateway push button 2 to display the current setting. Single-click Gateway push button 1 to cycle through the available options. Stop on the desired setting.
   The options are 9600, 19200, 38400. The factory default is 19200.
5. Single-click Gateway push button 2 to save the new setting.
6. If using a network ID (NID), adjust both rotary switches back to the NID value.
   To avoid losing the network connection between the Gateway and Nodes, reset the rotary switches back to their appropriate values before leaving the *DVCFG sub-menus. If the Gateway and Nodes lose their connection, the network may take up to 20 seconds to re-synchronize.
7. Double-click Gateway push button 2 to return to the Device Configuration (*DVCFG) menu.
8. Click Gateway push button 1 until reaching the *RUN menu option.

5.10.3 Set the Parity

Parity bits are used to detect errors in data.

1. Single-click button 1 to advance between menus. Stop when you reach the DVCFG menu.
2. Press button 2 once at the *DVCFG menu to enter the Device Configuration menu.
3. Press button 1 to advance through the items in the *DVCFG menu. Stop advancing when you've reached the setting for the PARITY.

4. Single-click Gateway push button 2 to display the current setting. Single-click Gateway push button 1 to cycle through the available options. Stop on the desired setting.
   The options are NONE, EVEN, ODD. The factory default is NONE.
5. Single-click Gateway push button 2 to save the new setting.
6. If using a network ID (NID), adjust both rotary switches back to the NID value.
   To avoid losing the network connection between the Gateway and Nodes, reset the rotary switches back to their appropriate values before leaving the *DVCFG sub-menus. If the Gateway and Nodes lose their connection, the network may take up to 20 seconds to re-synchronize.
7. Double-click Gateway push button 2 to return to the Device Configuration (*DVCFG) menu.
8. Click Gateway push button 1 until reaching the *RUN menu option.

5.11 Default Output Conditions

The timeout structure of the SureCross wireless network sets relevant outputs to user-defined conditions when radio or host communications fail.

If the timeout features are enabled, the outputs are set to default states or the last known state before the error. The timeout error conditions are cleared by either a reset command sent from the host, using the front panel display, or using the auto-recover feature. Communications timeouts occur in three areas within the SureCross wireless system:

- Host Link Failure to the Gateway (Modbus Timeout)
- Gateway Link Failure with any Node
- Node Link Failure with the Gateway

5.11.1 Host Link Failure

A **Host Link Failure** occurs when the defined timeout period, typically about four seconds, elapses with no communication between the host system (or Modbus master device) and the DX80 Gateway.

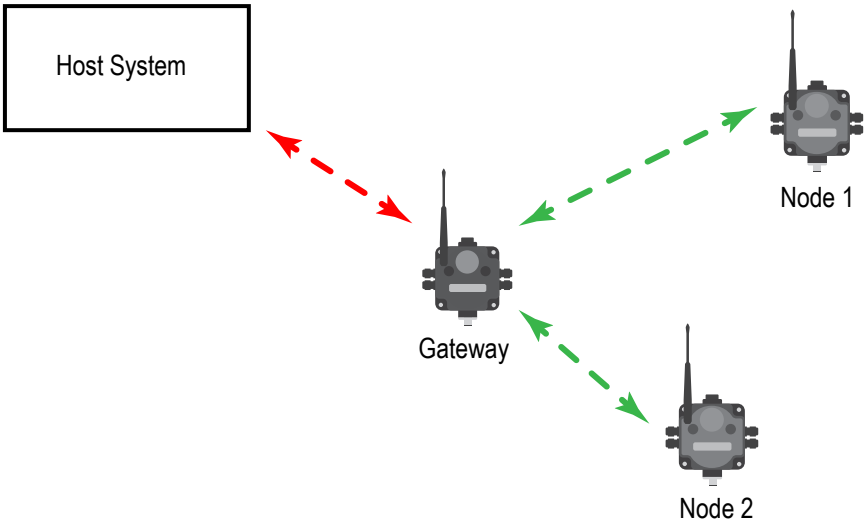

The Gateway places an error code in its I/O 8 register and sends a message to all relevant Nodes within the system to set outputs to the user-defined default states. Each Node has an enable flag for a host link failure condition. If a Node's 'host link failure' flag is not set, the outputs on the Node are not affected.

In the example shown, a host link failure between the host system and Gateway result in the outputs of Node 1 and Node 2 sent to the defined conditions if both Nodes have the host link failure enabled. When the host link failure is enabled, you should disable the automatic recovery. The host system should restart the system after the error condition is corrected.

5.11.2 Gateway Link Failure

Gateway link failures are determined by three global parameters: polling interval, maximum missed message count, and re-link count.

The **polling interval** (or rate) defines how often the Gateway communicates with each Node to verify the radio link is operating. The Gateway increments a Node's missed message count if a Node does not immediately report back from a polling request. If a Node's missed message count exceeds the **maximum missed message count**, the Gateway generates a timeout error in the Modbus I/O 8 register of the appropriate Node.

The auto-recover feature uses the **re-link count** parameter. If enabled, the error condition heals itself if the Gateway and Node have successfully exchanged N-number of good polling messages. The N-number is the re-link count, or the number of messages required to re-establish a radio link.

When the Node's **Gateway Link Failure** flag is set and the Gateway determines a timeout condition exists for a Node, any outputs linked from the failing Node are set to the user-defined default state. Each Node has a Gateway Link Failure flag that can be set or cleared depending on the particular application.

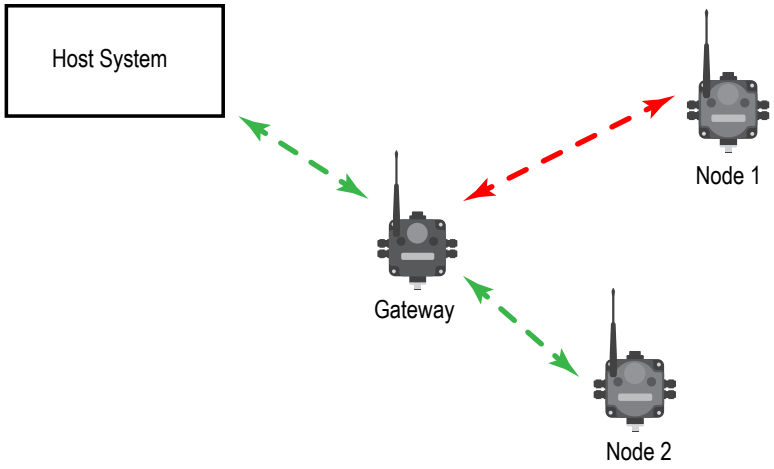

In the sample system shown, the communication link between the Gateway and Node 1 has failed. Node 2 must have its Gateway Link Failure flag set to allow any outputs linked to Node 1 to be set to the defined default state when the communication link between Node 1 and the Gateway fails.

5.11.3 Node Link Failure

A Node Link Failure is determined by the polling interval/rate or the out-of-sync timing.

When a Node detects a communications failure with the Gateway and the Node Link Failure flag is set, the output points are set to the user-defined states and the inputs are frozen. When output points are set to their default states because of an error condition, only the Gateway can clear the error condition and resume normal operation. The front panel buttons or the Gateway's register I/O 15 clear error conditions.

Clearing a lost radio link error does not restore communications. Banner recommends determining and resolving the cause of the radio link error, then allowing the system to auto-recover the lost communications.

Polling Interval. The global polling interval defines the time interval during which the Node should expect a polling request from the Gateway.

Out of Sync. An out of sync condition is met when a Node fails to receive the Gateway's beacon within a factory-set time period, about 10 seconds. Both the out of sync and polling interval conditions are used to detect a failure because the Node can remain in sync with the Gateway but be unable to transmit data. If the Gateway drops out of the network, the Nodes detects the out of sync condition long before the polling interval expires.

5.12 Defining the Units

The units parameter defines the range and/or type of data value associated with an input or output.

Selecting **Units** from within any configuration tool changes the units definition of several parameters, including threshold, hysteresis, and delta. For example, if the units are 0 to 20 mA, the threshold, hysteresis, and delta values are entered as milliampere values. Selecting Temp °C changes the threshold, hysteresis, and delta units to degrees Celsius.

Signed values range from –32768 to +32767 and allow for the measurement of negative values. Signed values are typically used for measuring temperatures. Signed values are stored as two's complement values.

Unsigned values range from 0 to 65535 and are used to measure values that do not go below zero, such as 4 to 20 mA, distance, or a counter.

5.12.1 Interpreting Register Values in the Banner Wireless System

The units conversion table defines the type and range of values for each type of I/O.

The wireless devices have many different units of measure for inputs including: milliamp (mA), voltage (V), temperature (°C or °F), humidity (RH), or a raw 16-bit or 32-bit value. Outputs can be either current (4 to 20 mA, 0 to 20 mA) or voltage (0 to 10 V dc). All values stored in Modbus registers are unsigned numbers, except for temperature readings. The temperature readings are stored as signed numbers (two's complement).

The following table defines the range of values and descriptions for input units.

Input Type	I/O Range		Holding Register Representation		Data Conversion	Description
	Min.	Max.	Min.	Max.		
Discrete	0	1	0	1	-	-
0 to 20 mA	0.0 mA	20.0 mA	0	65535	(20 mA ÷ 65535) × Reg Value = mA	Linear mapping of unsigned register value to current
4 to 20 mA	4.0 mA	20.0 mA	0	65535	((16 mA ÷ 65535) × Reg Value) + 4 = mA	Linear mapping of unsigned register value to current
0 to 10 V dc	0.0 V dc	10.0 V dc	0	65535	(10 V ÷ 65535) × Reg Value = V	Linear mapping of unsigned register value to voltage
Temp C/F (high resolution)	–1638.3	+1638.4	0	65535	(Converted Reg Value) ÷ 20 = Temp	Signed Values
Counter	0	65535	0	65535	-	-
16-bit T30UF	0 mm	65535 mm	0	65535	None; stored as millimeter value	Unsigned
Humidity	0% RH	100% RH	0	10000	(Reg Value) ÷ 100 = Relative Humidity (RH)	Unsigned

Temperature Measurements:

- In high resolution mode, the temperature = (Modbus register value) ÷ 20. For high resolution temperature input, 0 in the register is interpreted as 0° and 65535 in the register (0xFFFF) is interpreted as –1 ÷ 20 = –0.05°.
- In low resolution mode, the temperature is (Modbus register value) ÷ 2. For low resolution temperature input, 0 in the register is interpreted as 0° and 65535 in the register (0xFFFF) is interpreted as –1 ÷ 2 = –0.5°. The I/O range values are –16383 through 16384.

When using a 4 to 20 mA sensor with a 0 to 20 mA input, the sensor uses the 4 to 20 mA section of the total range. Using a 4 to 20 mA with a 0 to 20 mA input allows you to determine when you have an error condition with the sensor. A normal input reading between 4 and 20 mA indicates a functioning sensor whereas a value below 4 mA indicates an error condition, such as a broken wire or loose connection. Some Sure Cross devices allow you to configure the analog inputs and outputs to use either 0 to 20 mA or 4 to 20 mA.

6 Product Support and Maintenance

6.1 DX80 Performance Documentation

For additional information, including installation and configuration, weatherproofing, device menu maps, troubleshooting, and a list of accessories, refer to one of the following product manuals.

- Performance Quick Start Guide: 128185
- Performance Wireless I/O Network Instruction Manual: 132607
- Sure Cross® Accessories List b_3147091
- Sure Cross® Installation Guide: 151514
- Conducting a Site Survey: 133602
- Power Solutions and Battery Life Calculations: 140386
- Antenna Basics: 132113
- Sensor Connections: 136214
- System Layouts: 133601
- Glossary of Wireless Terminology

The following manuals are for the configuration software:

- User Configuration Software Instruction Manual: 140628
- Sensor Configuration Software Instruction Manual: 170002

The following documents are specific to the GatewayPro and DX83 models:

- Host Controller Systems Instruction Manual: 132114
- Web Configurator Instruction Manual: 134421

For DX80 radios released prior to the Performance radios, refer to the following documents:

- DX80 Legacy Configuration Information: b_4499713

6.2 Troubleshooting

The following troubleshooting tips include some basic instructions for common problems.

6.2.1 Startup Problems

The following problems are associated with starting up your radios.

The radio won't wake up. While in **storage mode**, the radio does not operate. All Sure Cross® radios powered from an integrated battery ship from the factory in storage mode to conserve the battery. To wake the device, press and hold button 1 for 5 seconds. To put any *Flex*Power® or integrated battery Sure Cross radio into storage mode, press and hold button 1 for 5 seconds. The radio is in storage mode when the LEDs stop blinking, but in some models, the LCD remains on for an additional minute after the radio enters storage mode. After a device has entered storage mode, you must wait 1 minute before waking it.

The sensors are not powered. Many SureCross devices have several switch power outputs for powering sensors. Enable the power supplies using the I/O point parameters for sensor supply #, supply output voltage, and warm-up time.

The radio seems only partially powered. If your ribbon cable has been unplugged from the radio board, verify the ribbon cable is fully seated and that it has been plugged into all pins. It is possible to accidentally plug in the ribbon cable and miss the top row of pins (shown). When the ribbon cable is plugged in incorrectly, the radio may partially power up, but it will not be able to communicate to any sensors nor will it communicate with the wireless network.

The radio won't enter binding mode. If you did not disconnect the power before changing the DIP switch positions, you must cycle power to the device. If you do not cycle power, the device does not register the DIP switch changes. For devices with an integrated battery, cycle the power by removing the battery for one minute.

6.2.2 LED Message Codes

Solid or flashing LEDs mean different things depending on whether the device is a Gateway, GatewayPro, Node, or DX85 Remote I/O Modbus Slave.

LED 1	LED 2	Definition/Solution
Solid green		Gateway, DX85: Power is on
Flashing green		Node: Good radio communication link
	Flashing amber	Gateway, DX85: Active Modbus communication
Flashing red	Flashing red	Device error. If the LCD also reports BAD EE, contact the factory for replacement.
	Flashing red	Gateway, DX85: Modbus communication error For a Gateway system, a Modbus communications error indicates a bad transmission or checksum error between the host and the Gateway device. For a GatewayPro system, a Modbus communications error indicates a communications problem internal to the GatewayPro. For a Gateway and Ethernet Bridge system, a Modbus communication error indicates a communication problem between the Gateway and the Ethernet Bridge. Solutions: 1. The default communications settings for the RS485 port are: 1 start bit, 8 data bits, no parity, 1 stop bit, and 19.2k baud. The DX80 Gateway uses Modbus RTU protocol for all communications. Supported Modbus function codes are 3, 6, and 16. 2. Verify the DX80 model supports RS485 serial communications. 3. RS485 termination or biasing is not supplied on the Gateway and should be provided externally to the DX80. (Termination is not required by the Gateway, proper biasing of the serial lines is required.) 4. Bad connection or bad cable.
	Flashing red	Node: No radio communication There are two settings on every Node device used to synchronize to the Gateway device: • The Node must be bound to the Gateway. • Each Node ID within that network must be set to a unique number. Solutions: 1. If the Gateway and Node are less than two meters apart, device communication may fail (radios may saturate). If the Gateway is less than two meters from another Gateway, send and receive transmissions between all devices the Gateways communicate with fails. 2. The Gateway and Node may be too far apart to achieve synchronization – consult the factory for options. 3. Use a qualified antenna on both the Gateway and Node devices. 4. After any system parameter change, cycle the power to re-synchronize all devices. 5. When a Node loses synchronization, it is programmed to attempt re-synchronization for five seconds, then sleep for fifteen seconds. Synchronizing may require up to twenty seconds. 6. Re-cycle power on the Gateway and Node devices.
	Solid amber	GatewayPro: No Modbus communication Solution: 1. The GatewayPro's LED 2 should always be blinking amber to indicate Modbus communication. If the LED 2 does not blink amber, verify the baud rates, slave IDs, parity, and stop bits are set correctly. 2. Check the cables connecting the GatewayPro to the host device.
No LED 1	No LED 2	All DX80 devices display "POWER" on the LCD for the first five to ten seconds after applying power. A DX80 Gateway always has a green LED 1 on when power is connected. DX80 Node devices flash a red LED 2 every three seconds or a green LED 1 every second depending on the RF Link status. If no LEDs are lighting up: 1. Put battery powered devices into power-down mode by pressing and holding button 1 for three to five seconds. To return from power-down mode, press and hold button 1 for three to five seconds. 2. Recheck the power connections and power requirements. Battery-powered devices require 3.6–5.5V dc. Non-battery powered devices require 10–30V dc. 3. After replacing the battery, allow up to sixty seconds for the device to power up. 4. The GatewayPro cannot be attached to another Modbus master device or a Modbus slave ID 1 via RS-485. Special configuration using the Web page configuration tool allows the GatewayPro to become a slave unit when necessary.

6.2.3 LCD Message Codes

These message codes display on the device's LCD.

Message	Solution
BAD EE	System Error. A system error typically represents a failure of the EE PROM. Contact the factory for replacement.
EC *XX*	The XX refers to the Modbus register 8 message code shown in Modbus Message Codes for Register 8 on p. 50. The LCD displays the message code in decimal; host-controlled systems read the message codes in hex. DX80 display shows *ERROR: The Gateway uses fully-acknowledged polling to ensure each Node radio link is robust. If a prescribed number of sequential polling cycles are not acknowledged by a Node, the Gateway considers the radio link with that Node to be timed out. All outputs on the Node in question are set to the user-selected default state or the output holds its last state, depending on user configuration options set using the User Configuration Tool. If the Node's radio link recovers and the Gateway or GatewayPro determines enough acknowledged polling messages have accumulated, the link is reinstated.
EC 53	Radio Device (polling/heartbeat) Timeout. (Decimal value 13569.) A Node dropped out of the wireless network based on the parameters defined for polling or heartbeat. For more information, see Message Code 35 in Modbus Message Codes for Register 8 on p. 50.
EC 54	Modbus time-out. A Gateway timeout (time of inactivity on the serial channel) was detected. For more information, see Message Code 36 in Modbus Message Codes for Register 8 on p. 50.
No LCD	All DX80s display "POWER" on the LCD for the first 5 to 10 seconds after applying power. A Gateway's LED 1 is solid green when power is connected. Nodes flash a red LED 2 every 3 seconds or a green LED 1 every second depending on the radio link status. • Battery-powered devices turn off the LCD after 15 minutes (factory default). Push any button to reactivate the LCD. Battery-powered devices may be in storage mode. To put battery powered devices into storage mode, hold button 1 for 5 seconds. To return from storage mode, hold button 1 for 5 seconds. • Recheck the power connections and power requirements. Battery-powered devices require 3.6 to 5.5 V dc. Non-battery powered devices require 10 to 30 V dc. • After replacing the battery, allow up to sixty seconds for the device to power up.

Modbus Message Codes for Register 8

Register I/O 8 is reserved for device messages or Site Survey data when in Site Survey mode.

Conditions are detected as they occur and are reported to the Gateway. After the message is sent to the Gateway, the Node does not resend the message until the condition changes or there is a higher priority message. The higher the message code, the higher the priority. For more information about how Site Survey data is stored in registers 7 and 8, refer to Conducting a Site Survey (Gateway and Nodes) on p. 16.

The following are the Modbus message codes, shown in hex, that may appear on the Sure Cross devices' I/O 8 Modbus register.

Message Code [15:8]	Data Field [7:0]	Description
00	80	Normal operation. Device message register contents 0x0080 indicate the Node is synchronized to the Gateway. (Decimal value 128.) A value of zero (0) indicates there is no device present.
01	00-FF	Unknown message. The message was received correctly (correct checksum), but it is not a recognized command. This type of message is usually caused by devices with poor radio links or collocated networks that are not uniquely separated by binding codes and Network IDs. Network performance is not affected. (Decimal values 256 through 511.)
35	01	Radio Device (polling/heartbeat) Timeout. (Decimal value 13569.) A Node dropped out of the wireless network based on the polling or heartbeat parameters. Refer to the User Configuration Tool documentation for polling or heartbeat parameters and the timeout operation. When the least significant bit is on (1), an error condition exists. • Run a site survey to determine the quality of the radio link. If no communication exists between the Gateway and Node, verify the power at the Node and all antenna connections. Blocked radio communications may also be a result of recently changed environmental conditions. • Replace the battery of a battery-powered Node. Although the LCD and device may appear functional, the battery may not have enough capacity to handle radio communication.
36	01	Modbus time-out. A Gateway timeout (inactivity on the serial channel) was detected. (Decimal value 13825.) When the least significant bit is on (1), an error condition exists.

Message Code [15:8]	Data Field [7:0]	Description
FE	--	Modbus register 8 device messages are disabled. The Modbus register 8 clears or disables messages using the Gateway's Modbus register 15. (Decimal values 65024 through 65279.)

6.2.4 Inputs and Outputs

Some inputs or outputs are not working.

Option 1. From the Node, access the menu system and use manual scrolling mode within *RUN to freeze the I/O status on the LCD display for the device in question. Verify that when the input device changes state or changes value, the LCD mirrors the behavior. If the Node is in a hazardous location, access the Node's I/O from the Gateway by changing the Gateway's right rotary dial to the Node number in question. For example, to view the I/O status of Node 3, move the Gateway's right rotary dial to 3. The Gateway's LCD now scrolls through Node 3's I/O. To freeze the display on a particular I/O point, double-click button 2. The autoscrolling on the Gateway stops at the *RUN screen. Single-click button 1 to advance through the Node's I/O points.

Option 2. Verify the LCD on the output side mirrors the linked input's behavior. If the input device state LCD on the origination DX80 and the LCD on the destination DX80 behave the same, there may be a wiring issue or an interfacing problem. Consult the factory.

Option 3. Nodes will not sample inputs unless the Nodes are in sync with a Gateway. Verify your Node is in sync with its Gateway.

6.2.5 Radio Link Time-Out and Recovery (Non-Host Connected Systems)

The SureCross® wireless devices employ a deterministic link time-out method to address radio link interruption or failure. When a specific Node/Gateway radio link fails, all pertinent wired outputs are de-energized until the link is recovered (see component datasheet for more information.) Through this process, users of Banner wireless networks can be assured that disruptions in the communications link result in predictable system behavior.

The link time-out feature uses a fully-acknowledged polling method to determine the radio link status of each Node on the network.

If after a specified number of sequential polling cycles the Node does not acknowledge a message, the Gateway considers the link with that Node timed out. The LCDs on both the Node and Gateway show *ERROR. Following a time-out, the Node de-energizes outputs and the Gateway sets all outputs linked to the Node in question to a de-energized state. Inputs from the Node mapped to outputs on the Gateway are suspended during a link time-out.

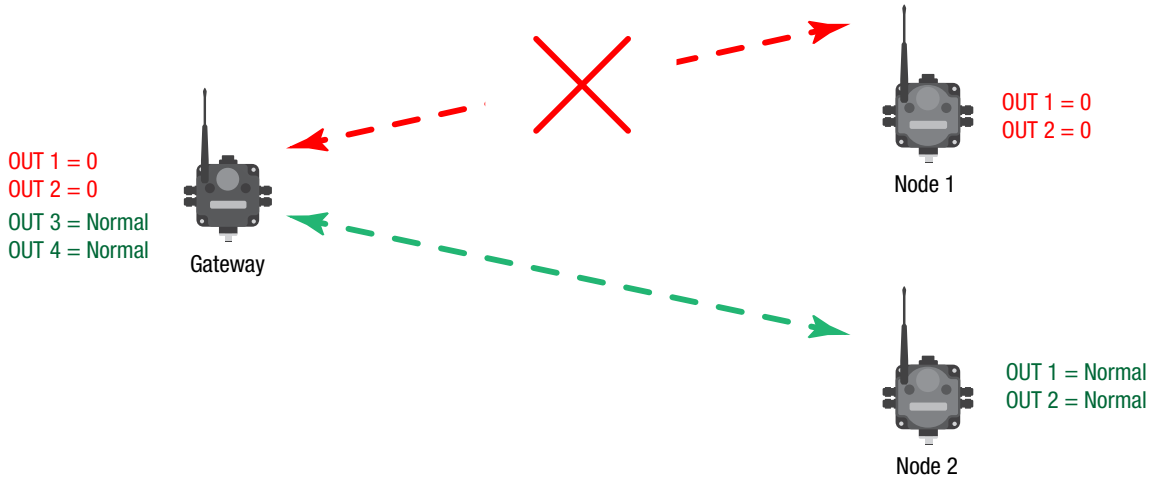

Figure 5. Radio link between the Gateway and Node 1 has timed out.

After a link has failed, the Gateway must receive a specified number of good data packets from the Node in question before the link is reinstated. Outputs are restored to current values after the link recovers.

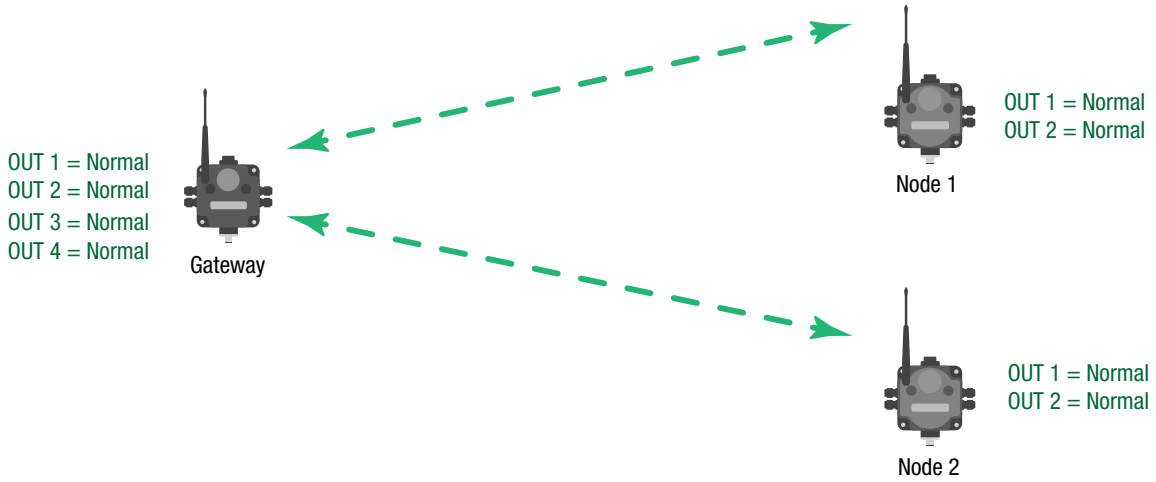

Figure 6. Radio link between the Gateway and Node 1 has recovered.

6.3 Maintenance

Follow these instructions to perform basic maintenance tasks.

6.3.1 Replacing the Main Body Gasket

Check the main body gasket every time a SureCross device is opened.

Replace the gasket when it is damaged, discolored, or showing signs of wear. The gasket must be:

- Fully seated within its channel along the full length of the perimeter, and
- Positioned straight within the channel with no twisting, stress, or stretching.

6.3.2 Replacing the Rotary Dial Access Cover

Check the rotary dial access cover o-ring every time the access cover is removed.

Replace the o-ring when it is damaged, discolored, or showing signs of wear. The o-ring should be:

- Seated firmly against the threads without stretching to fit or without bulging loosely, and
- Pushed against the flanged cover.

When removing or closing the rotary dial access cover, manually twist the cover into position. Do not allow cross-threading between the cover and the device's face. After the cover is in place and manually tightened, use a small screwdriver (no longer than five inches total length) as a lever to apply enough torque to bring the rotary dial access cover even with the cover surface.

6.3.3 Install or Replace the Battery for a DX81 Model

To replace the lithium "D" cell battery in the FlexPower Supply Module, follow these steps.

1. Unplug the **DX81-LITH** or **DX81H** FlexPower Supply Module from the Sure Cross® device it powers.

2. Remove the four screws mounting the battery module face plate to the body and remove the face plate.
3. Remove the discharged battery by pressing the battery towards the negative terminal to compress the spring. Pry up on the battery's positive end to remove from the battery holder.
4. Install the new battery or batteries.
5. Verify the battery's positive and negative terminals align to the positive and negative terminals of the battery holder mounted within the case. Caution: There is a risk of explosion if the battery is replaced incorrectly.
6. After replacing the battery, allow up to 60 seconds for the device to power up.
7. Properly dispose of your used battery according to local regulations by taking it to a hazardous waste collection site, an e-waste disposal center, or any other facility qualified to accept lithium batteries.

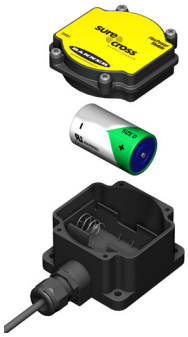

For outside or high humidity environments, dielectric grease may be applied to the battery terminals to prevent moisture and corrosion buildup.

As with all batteries, these are a fire, explosion, and severe burn hazard. Do not burn or expose them to high temperatures. Do not recharge, crush, disassemble, or expose the contents to water.

The battery may be replaced in explosive gas atmospheres.

For non-hazardous locations, the replacement battery is model **BWA-BATT-011**. For non-hazardous or hazardous locations, the replacement battery is Xeno model XL-205F, Banner model **BWA-BATT-001**. For pricing and availability, contact Banner Engineering.

WARNING:
- Potential electrostatic charging hazard — only clean with a damp cloth.
- The replacement battery MUST be a Banner approved battery, model number **BWA-BATT-001**. Use of a different battery will VOID the intrinsic safety rating of this device and may result in an explosion!
- When replacing the battery, the negative end of the battery holder is the side with the spring terminal. This side is marked with a minus (–) sign.
- Do not attempt to recharge the battery. These batteries are not rechargeable. Recharging may cause serious injury to personnel or damage the equipment. Replace only with factory recommended batteries.

6.3.4 Install or Replace the Battery for a DX80 Integrated Battery Model

To install or replace the 3.6 V lithium "D" cell battery in any model with a battery integrated into the housing, follow these steps.

1. Remove the four screws mounting the face plate to the housing and remove the face plate.
2. Remove the discharged battery.
3. Install the new battery, verifying the battery's positive and negative terminals align to the positive and negative terminals of the battery holder mounted within the case.
4. After installing the battery, allow up to 60 seconds for the device to power up.
5. Properly dispose of used batteries according to local regulations by taking it to a hazardous waste collection site, an e-waste disposal center, or other facility qualified to accept lithium batteries.

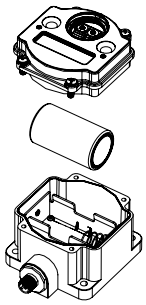

CAUTION: There is a risk of explosion if the battery is replaced incorrectly.

As with all batteries, these are a fire, explosion, and severe burn hazard. Do not burn or expose them to high temperatures. Do not recharge, crush, disassemble, or expose the contents to water.

For non-hazardous locations, the replacement battery is model **BWA-BATT-011**. For non-hazardous or hazardous locations, the replacement battery is Xeno model XL-205F, Banner model **BWA-BATT-001**. For pricing and availability, contact Banner Engineering.

6.3.5 Install or Replace the Battery (DX99...D Models)

WARNING:

- Do not replace battery when an explosive dust atmosphere may be present.
- The replacement battery MUST be a Banner approved battery, model number **BWA-BATT-001**. Use of a different battery will VOID the intrinsic safety rating of this device and may result in an explosion!
- When replacing the battery, the negative end of the battery holder is the side by the large capacitors. This side is marked with a minus (–) sign.
- Do not attempt to recharge the battery. These batteries are not rechargeable. Recharging may cause serious injury to personnel or damage the equipment. Replace only with factory recommended batteries.

To install or replace the lithium "D" cell battery in the metal housings, follow these steps.

1. Unscrew the lid of the metal enclosure.
2. Lift the radio out of the metal enclosure and pull the spacer frame off the back side of the radio.
3. Disconnect the radio by unplugging the ribbon cable from the radio board and set aside the radio and spacer frame.
4. If you are replacing an existing battery, remove the discharged battery.
5. Insert a new battery. Only use a 3.6 V lithium battery from Xeno, model number XL-205F.
6. Verify the battery's positive and negative terminals align to the positive and negative terminals of the battery holder mounted within the case. Caution: There is a risk of explosion if the battery is replaced incorrectly.
7. Wait two minutes.
8. Insert the ribbon cable through the center of the spacer frame, then plug the ribbon cable back into the radio board.
9. Insert the radio back onto the spacer frame pins. Push the radio and spacer frame assembly back into the enclosure until it is seated.
10. Screw on the lid and tighten.
11. After replacing the battery, allow up to 60 seconds for the device to power up.
12. Properly dispose of your used battery according to local regulations by taking it to a hazardous waste collection site, an e-waste disposal center, or other facility qualified to accept lithium batteries.

As with all batteries, these are a fire, explosion, and severe burn hazard. Do not burn or expose them to high temperatures. Do not recharge, crush, disassemble, or expose the contents to water.

The battery may be replaced in explosive gas atmospheres. Replacement battery model number: BWA-BATT-001. For pricing and availability, contact Banner Engineering.

6.4 Sure Cross® Radio Certifications

Banner's Sure Cross product line is certified by the FCC, European Union, and many other countries for operation within specific radio frequencies.

6.4.1 FCC and ISED Certification, 900 MHz, 1 Watt Radios

This equipment contains transmitter module RM1809.

FCC ID: UE3RM1809 IC: 7044A-RM1809 HVIN: RM1809	This device complies with Part 15 of the FCC Rules. Operation is subject to the following two conditions: (1) this device may not cause harmful interference, and (2) this device must accept any interference received, including interference that may cause undesired operation. This device contains licence-exempt transmitters(s)/receiver(s) that comply with Innovation, Science and Economic Development Canada's licence-exempt RSS(s). Operation is subject to the following two conditions: (1) This device may not cause interference, and (2) This device must accept any interference, including interference that may cause undesired operation of the device. Cet appareil contient des émetteurs/récepteurs exemptés de licence conformes à la norme Innovation, Sciences, et Développement économique Canada. L'exploitation est autorisée aux deux conditions suivantes: (1) L'appareil ne doit pas produire de brouillage, and (2) L'utilisateur de l'appareil doit accepter tout brouillage radioélectrique subi, même si le brouillage est susceptible d'en compromettre le fonctionnement.

6.4.1 FCC Notices

IMPORTANT: The transmitter modules RM1809 have been certified by the FCC / ISED for use with other products without any further certification (as per FCC section 2.1091). Changes or modifications not expressly approved by the manufacturer could void the user's authority to operate the equipment.

IMPORTANT: The transmitter modules RM1809 have been certified for fixed base station and mobile applications. If modules will be used for portable applications, the device must undergo SAR testing.

IMPORTANT: If integrated into another product, the FCC ID label must be visible through a window on the final device or it must be visible when an access panel, door, or cover is easily removed. If not, a second label must be placed on the outside of the final device that contains the following text:

Contains Transmitter Module RM1809
FCC ID: UE3RM1809
IC: 7044A-RM1809
HVIN: RM1809
This device complies with Part 15 of the FCC Rules. Operation is subject to the following two conditions: (1) this device may not cause harmful interference, and (2) this device must accept any interference received, including interference that may cause undesired operation.

6.4.1 Note

This equipment has been tested and found to comply with the limits for a Class B digital device, pursuant to Part 15 of the FCC Rules. These limits are designed to provide reasonable protection against harmful interference in a residential installation. This equipment generates, uses, and can radiate radio frequency energy and, if not installed and used in accordance with the instructions, may cause harmful interference to radio communications. However, there is no guarantee that interference will not occur in a particular installation. If this equipment does cause harmful interference to radio or television reception, which can be determined by turning the equipment off and on, the user is encouraged to try to correct the interference by one or more of the following measures:

- Reorient or relocate the receiving antenna,
- Increase the separation between the equipment and receiving module,
- Connect the equipment into an outlet on a circuit different from that to which the receiving module is connected, and/or
- Consult the dealer or an experienced radio/TV technician for help.

Antenna WARNING: This device has been tested with Reverse Polarity SMA connectors with the antennas listed in Table 2 on p. 56. When integrated into OEM products, fixed antennas require installation preventing end-users from replacing them with non-approved antennas. Antennas not listed in the tables must be tested to comply with FCC Section 15.203 (unique antenna connectors), FCC Section 15.247 (emissions), and ISED RSS-Gen Section 6.8.

6.4.1 FCC and ISED Approved Antennas

WARNING: This equipment is approved only for mobile and base station transmitting devices. Antenna(s) used for this transmitter must be installed to provide a separation distance of at least 20 cm from all persons and must not be collocated or operating in conjunction with any other antenna or transmitter.

This radio transmitter module RM1809 have been approved by FCC and ISED Canada to operate with the antenna types listed below, with the maximum permissible gain indicated. Antenna types not included in this list that have a gain greater than the maximum gain indicated for any type listed are strictly prohibited for use with this device.

Table 2: Certified Antennas for 900 MHz 1 Watt

Model Number	Antenna Type	Maximum Gain	Impedance	Minimum Required Cable/ Connector Loss
-	Integral Antenna	Unity gain		0
BWA-9O1-x	Omni, 1/4 wave dipole	≤2 dBi	50 Ω	0
BWA-9O2-C	Omni, 1/2 wave dipole, Swivel	≤2 dBi	50 Ω	0
BWA-9O6-A	Omni Wideband, Fiberglass Radome	≤8.2 dBi	50 Ω	2.2 dB
BWA-9O5-B	Omni Base Whip	≤7.2 dBi	50 Ω	1.2 dB
BWA-9Y10-A	Yagi	≤10 dBi	50 Ω	4 dB

6.4.2 FCC and ISED Certification, 2.4GHz

This equipment contains transmitter module DX80-2400 or SX243.

FCC ID: UE300DX80-2400
IC: 7044A-DX8024
FCC ID: UE3SX243
IC: 7044A-SX243
HVIN: DX80G2 / DX80N2 / SX243

This device complies with Part 15 of the FCC Rules. Operation is subject to the following two conditions: (1) this device may not cause harmful interference, and (2) this device must accept any interference received, including interference that may cause undesired operation.

This device contains licence-exempt transmitters(s)/receiver(s) that comply with Innovation, Science and Economic Development Canada's licence-exempt RSS(s). Operation is subject to the following two conditions: (1) This device may not cause interference, and (2) This device must accept any interference, including interference that may cause undesired operation of the device.

Cet appareil contient des émetteurs/récepteurs exemptés de licence conformes à la norme Innovation, Sciences, et Développement économique Canada. L'exploitation est autorisée aux deux conditions suivantes: (1) L'appareil ne doit pas produire de brouillage, and (2) L'utilisateur de l'appareil doit accepter tout brouillage radioélectrique subi, même si le brouillage est susceptible d'en compromettre le fonctionnement.

6.4.2 FCC Notices

IMPORTANT: The transmitter modules DX80-2400 and SX243 have been certified by the FCC / ISED for use with other products without any further certification (as per FCC section 2.1091). Changes or modifications not expressly approved by the manufacturer could void the user's authority to operate the equipment.

IMPORTANT: The transmitter modules DX80-2400 and SX243 have been certified for fixed base station and mobile applications. If modules will be used for portable applications, the device must undergo SAR testing.

IMPORTANT: If integrated into another product, the FCC ID/IC label must be visible through a window on the final device or it must be visible when an access panel, door, or cover is easily removed. If not, a second label must be placed on the outside of the final device that contains the following text:

Contains Transmitter Module [DX80-2400 or SX243]
FCC ID: [UE300DX80-2400 or UE3SX243]
IC: [7044A-DX8024 or 7044A-SX243]
HVIN: [DX80G2, DX80N2 or SX243]
This device complies with Part 15 of the FCC Rules. Operation is subject to the following two conditions: (1) this device may not cause harmful interference, and (2) this device must accept any interference received, including interference that may cause undesired operation.

6.4.2 Note

This equipment has been tested and found to comply with the limits for a Class B digital device, pursuant to Part 15 of the FCC Rules. These limits are designed to provide reasonable protection against harmful interference in a residential installation. This equipment generates, uses, and can radiate radio frequency energy and, if not installed and used in accordance with the instructions, may cause harmful interference to radio communications. However, there is no guarantee that interference will not occur in a particular installation. If this equipment does cause harmful interference to radio or television reception, which can be determined by turning the equipment off and on, the user is encouraged to try to correct the interference by one or more of the following measures:

- Reorient or relocate the receiving antenna,
- Increase the separation between the equipment and receiving module,
- Connect the equipment into an outlet on a circuit different from that to which the receiving module is connected, and/or

- Consult the dealer or an experienced radio/TV technician for help.

Antenna Warning: This device has been tested with Reverse Polarity SMA connectors with the antennas listed in Table 3 on p. 57. When integrated into OEM products, fixed antennas require installation preventing end-users from replacing them with non-approved antennas. Antennas not listed in the tables must be tested to comply with FCC Section 15.203 (unique antenna connectors), FCC Section 15.247 (emissions), and ISED RSS-Gen Section 6.8.

6.4.2 FCC and ISED Approved Antennas

WARNING: This equipment is approved only for mobile and base station transmitting devices. Antenna(s) used for this transmitter must be installed to provide a separation distance of at least 20 cm from all persons and must not be collocated or operating in conjunction with any other antenna or transmitter.

The radio transmitter modules DX80-2400 and SX243 have been approved by FCC and ISED Canada to operate with the antenna types listed below, with the maximum permissible gain indicated. Antenna types not included in this list that have a gain greater than the maximum gain indicated for any type listed are strictly prohibited for use with this device.

Table 3: Certified Antennas for 2.4 GHz

Model	Antenna Type	2.4 GHz Radio Module	Maximum Gain	Impedance
	Integral antenna	DX80-2400	Unity gain	
BWA-2O2-C	Omni, 1/2 wave dipole, Swivel	DX80-2400 or SX243	≤ 2 dBi	50 Ω
BWA-2O2-D	Omni, Dome, Box Mount	DX80-2400	≤ 2 dBi	50 Ω
BWA-2O2-E	Omni, 1/4 wave dipole, Swivel	DX80-2400	≤ 2 dBi	50 Ω
BWA-2O5-C	Omni, Collinear, Swivel	DX80-2400	≤ 5 dBi	50 Ω
BWA-2O5-MA	Omni, full-wave dipole, NMO	DX80-2400	≤ 4.5 dBi	50 Ω
BWA-2O6-A	Omni, Dome, Box Mount	DX80-2400	≤ 6 dBi	50 Ω
BWA-2O7-C	Omni, Coaxial Sleeve, Swivel	DX80-2400	≤ 7 dBi	50 Ω

6.4.3 Exporting Sure Cross® Radios

Exporting Sure Cross® Radios. It is our intent to fully comply with all national and regional regulations regarding radio frequency emissions. **Customers who want to re-export this product to a country other than that to which it was sold must ensure the device is approved in the destination country.** The Sure Cross wireless products were certified for use in these countries using the antenna that ships with the product. When using other antennas, verify you are not exceeding the transmit power levels allowed by local governing agencies. This device has been designed to operate with the antennas listed on Banner Engineering's website and having a maximum gain of 9 dBm. Antennas not included in this list or having a gain greater that 9 dBm are strictly prohibited for use with this device. The required antenna impedance is 50 ohms. To reduce potential radio interference to other users, the antenna type and its gain should be so chosen such that the equivalent isotropically radiated power (EIRP) is not more than that permitted for successful communication. Consult with Banner Engineering Corp. if the destination country is not on this list.

6.5 Glossary of Wireless Terminology

This definitions list contains a library of common definitions and glossary terms specific to the Wireless products.

active threshold An active threshold is a trigger point or reporting threshold for an analog input.

a/d converter An analog to digital converter converts varying sinusoidal signals from instruments into binary code for a computer.

address mode The Sure Cross® wireless devices may use one of two types of addressing modes: rotary dial addressing or extended addressing. In **rotary dial** address mode, the left rotary dial establishes the network ID (NID) and the right rotary dial sets the device address. **Extended** address mode uses a security code to "bind" Nodes to a specific Gateway. Bound Nodes can only send and receive information from the Gateway they are bound to.

antenna Antennas transmit radio signals by converting radio frequency electrical currents into electromagnetic waves. Antennas receive the signals by converting the electromagnetic waves back into radio frequency electrical currents.

attenuation Attenuation is the radio signal loss occurring as signals travel through the medium. Radio signal attenuation may also be referred to as free space loss. The higher the frequency, the faster the signal strength decreases. For example, 2.4 GHz signals attenuate faster than 900 MHz signals.

baseline filter (M-GAGE) Under normal conditions, the ambient magnetic field fluctuates. When the magnetic field readings drift below a threshold setting, the baseline or drift filter uses an algorithm to slowly match the radio device's baseline to the ambient magnetic field.

binding (DX80 star networks) Binding Nodes to a Gateway ensures the Nodes only exchange data with the Gateway they are bound to. After a Gateway enters binding mode, the Gateway automatically generates and transmits a unique extended addressing (XADR), or binding, code to all Nodes within range that are also in binding mode. The extended addressing (binding) code defines the network, and all radios within a network must use the same code.

After binding your Nodes to the Gateway, make note of the binding code displayed under the ***DVCFG** > **XADR** menu on the Gateway's LCD. Knowing the binding code prevents having to re-bind all Nodes if the Gateway is ever replaced.

binding (MultiHop networks) Binding MultiHop radios ensures all MultiHop radios within a network communicate only with other radios within the same network. The MultiHop radio master automatically generates a unique binding code when the radio master enters binding mode. This code is then transmitted to all radios within range that are also in binding mode. After a repeater/slave is bound, the repeater/slave radio accepts data only from the master to which it is bound. The binding code defines the network, and all radios within a network must use the same binding code.

After binding your MultiHop radios to the master radio, make note of the binding code displayed under the ***DVCFG** > **-BIND** menu on the LCD. Knowing the binding code prevents having to re-bind all radios if the master is ever replaced.

binding (serial data radio networks) Binding the serial data radios ensures all radios within a network communicate only with the other radios within the same network. The serial data radio master automatically generates a unique binding code when the radio master enters binding mode. This code is transmitted to all radios within range that are also in binding mode. After a repeater/slave is bound, the repeater/slave radio accepts data only from the master to which it is bound. The binding code defines the network, and all radios within a network must use the same binding code.

bit packing i/o Bit packing uses a single register, or range of contiguous registers, to represent I/O values. This allows you to read or write multiple I/O values with a single Modbus message.

booster (boost voltage) A booster is an electronic circuit that increases a battery-level voltage input (3.6V) to a sensor operating voltage output (5 to 20 V).

CE The CE mark on a product or machine establishes its compliance with all relevant European Union (EU) Directives and the associated safety standards.

change of state Change of state reporting is a report initiated by the Node when a change to the sensor's input state is detected. If the input does not change, nothing is reported to the Gateway.

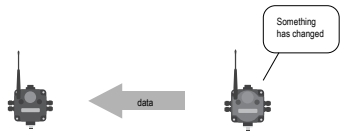

channel A channel may be either a path for communications or a range of radio frequencies used by a transceiver during communication.

collision A collision is a situation in which two or more transmissions are competing to communicate on a system that can only handle one transmission at a time. This may also be referred to as a data collision.

collocated networks To prevent interference between collocated wireless networks, assign each wireless network a different Network ID. The Network ID is a unique identifier assigned to each wireless network using the rotary dials on the Gateway.

contention architecture Contention architecture is a wireless communication architecture that allows all network devices access to the communications channel at the same time. This may lead to transmission collisions.

counter - event

The event counter counts the total number of times an input signal changes to the high/ON/1 state. The counter increments on the falling edge of an input signal when the signal level crosses the threshold.

Event counters can be used to measure the total operational cycles of a spinning shaft or the total number of items traveling down a conveyor.

counter - frequency

The frequency counter calculates the frequency of the input signal, in Hz.

Frequency counters can be used to measure flow rates, such as measuring the flow rate of items on a conveyor or the speed at which a windmill spins.

cyclic reporting

Cyclic reporting is when the Gateway polls the Node at user-defined intervals.

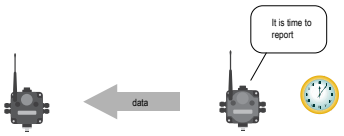

debounce

When a signal changes state using a mechanical switch or relay, the signal can oscillate briefly before stabilizing to the new state. The debounce filter examines the signal's transitions to determine the signal's state.

The signal oscillates between states after a mechanical switch or relay activates.

Without a debounce filter, the signal is interpreted to change state multiple times.

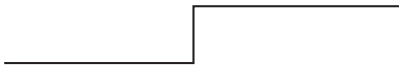

With a debounce filter, the signal is interpreted to change state only once.

The factory default setting is to activate the input filtering to compensate for unclean state transitions.

decibel

A decibel is a logarithmic ratio between a specific value and a base value of the same unit of measure. With respect to radio power, dBm is a ratio of power relative to 1 milliWatt. According to the following equation, 1 mW corresponds to 0 dBm.

Equation: $PmW = 10^{x/10}$ where x is the transmitted power in dBm, or dBm = 10 log(PmW)

Another decibel rating, dBi, is defined as an antenna's forward gain compared to an idealized isotropic antenna. Typically, dBm = dBi = dBd + 2.15 where dBi refers to an isotropic decibel, dBd is a dipole decibel, and dBm is relative to milliwatts.

deep sleep mode

Potted Puck models, potted M-GAGE models: Some battery-powered M-GAGE radios ship in a "deep sleep" mode to conserve battery power. While in "deep sleep" mode, the M-GAGE does not attempt to transmit to a parent radio and remains in "deep sleep" until an LED light at the receiving window wakes it up. M-GAGEs that ship in "deep sleep" mode are typically the potted M-GAGEs that require an LED Optical Commissioning Device to configure the M-GAGE.

Wireless Q45 Sensors: If the Wireless Q45 Sensor fails to communicate with the Gateway for more than 5 minutes, it enters **sleep mode**. The radio continues to search for the Gateway at a slower rate and the LEDs do not blink. To wake up the sensor, press any button. After the Q45 wakes up, it will do a fast rate search for the Gateway for five more minutes.

default output conditions/ triggers

Default output conditions/triggers are the conditions that drive outputs to defined states. Example default output conditions include when radios are out of sync, when a device cycles power, or during a host communication timeout.

Device Power Up—Power-up events occur every time the device is powered up.

Out of Sync—Out-of-sync events occur when the radio is out of sync with its master radio.

Host Link Failure—Host link failure is when the defined timeout period has elapsed with no communications between the host system (or Modbus master device) and the DX80 Gateway, typically about four seconds. These events trigger when a host link failure has been detected.

Node Link Failure—Node link failures are determined by the polling interval or the out-of-sync timing. When a Node detects a communications failure with the Gateway and the Node Link Failure flag is set, the output points are set to the user-defined states and the inputs are frozen.

Gateway Link Failure—Gateway link failures are determined by three global parameters: Polling Interval, Maximum Missed Message Count and Re-link Count. When the Node's Gateway Link Failure flag is set and the Gateway determines a timeout condition exists for a Node, any outputs linked from the failing Node are set to the user-defined default state.

default output value Default output values are specific values written to output registers. For discrete outputs, this is a 1 (on) or 0 (off) value. For analog outputs the value can be any valid register value. When a default condition occurs, these default output values are written to the output register.

delta The delta parameter defines the change required between sample points of an analog input before the analog input reports a new value. To turn off this option, set the Delta value to 0.

determinism A deterministic system defines how network endpoints behave during the loss of communications. The network identifies when the communications link is lost and sets relevant outputs to user-defined conditions. Once the radio signal is re-established, the network returns to normal operation.

device, node, or radio address/ID (DX80 Networks) The Node address is a unique identifier for each wireless device on a network and is set using the rotary dials. For the DX80 networks, Gateways are identified as device 0. Nodes are assigned addresses (NADR) from 01 to 47 using the rotary dials.

directional antenna A direction antenna, or Yagi, is an antenna that focuses the majority of the signal energy in one specific direction.

Direct Sequence Spread Spectrum (DSSS) Direct Sequence Spread Spectrum is a method for generating spread spectrum transmissions where the transmitted signal is sent at a much higher frequency than the original signal, spreading the energy over a much wider band. The receiver is able to de-spread the transmission and filter the original message. DSSS is useful for sending large amounts of data in low to medium interference environments.

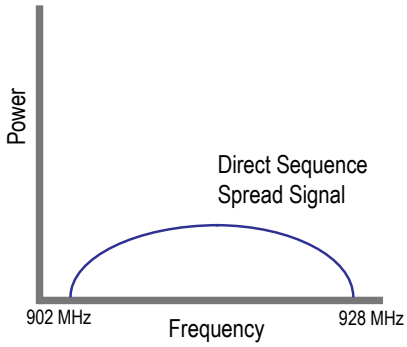

DX83 Ethernet Bridge The Ethernet Bridge acts as a communications bridge between the Modbus RTU network (Gateway) and Modbus/TCP or EtherNet/IP host systems and includes the ability to configure the network using a Web browser interface.

effective isotropic radiated power (EIRP) The EIRP is the effective power found in the main lobe of a transmitter antenna, relative to a 0 dB radiator. EIRP is usually equal to the antenna gain (in dBi) plus the power into that antenna (in dBm).

Ethernet Ethernet is an access method for computer network (Local Area Networks) communications, defined by IEEE as the 802 standard.

EtherNet/IP™ EtherNet/IP is Allen-Bradley's DeviceNet running over Ethernet hardware.

extended address mode Using extended address mode isolates networks from one another by assigning a unique code, the extended address code, to all devices in a particular network. Only devices sharing the extended address code can exchange data. The extended address code is derived from the Gateway's serial number, but the code can be customized using the manual binding procedure.

flash pattern Flash patterns are established by selecting timeslots to turn the output on or off. While originally the flash pattern was designed to turn on and off an indicator light, the flash pattern can be set for any discrete output or switch power output.

***Flex*Power** Banner's *Flex*Power® technology allows for a true wireless solution by allowing the device to operate using either 10 to 30 V DC, 3.6 V lithium D cell batteries, or solar power. This unique power management system can operate a *Flex*Power Node and an optimized sensing device for up to 5 years on a single lithium D cell.

free space loss (FSL) The radio signal loss occurring as the signal radiates through free space. Free Space Loss = 20 Log (4(3.1416)d/λ) where d is in meters. Remembering that $\lambda f = c = 300 \times 10^6$ m/s, the equations reduce down to:

For the 900 MHz radio band: FSL = 31.5 + 20 Log d (where d is in meters).

For the 2.4 GHz radio band: FSL = 40 + 20 Log d (where d is in meters.)

Frequency Hopping Spread Spectrum (FHSS) Frequency Hopping Spread Spectrum (FHSS) is a method for generating spread spectrum transmissions where the signal is switched between different frequency channels in a pseudo-random sequence known by both the transmitter and the receiver. FHSS is useful for sending small packets of data in a high interference environment.

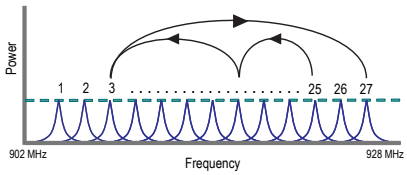

Fresnel zone Fresnel zones are the three-dimensional elliptical zones of radio signals between the transmitter and receiver. Because the signal strength is strongest in the first zone and decreases in each successive zone, obstacles within the first Fresnel zone cause the greatest amount of destructive interference.

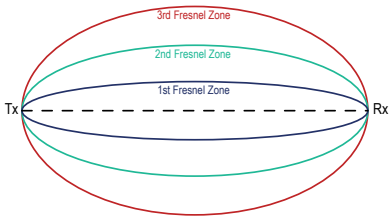

gain Gain represents how well the antenna focuses the signal power. A 3 dB gain increase doubles the effective transmitting power while every 6 dB increase doubles the distance the signal travels. Increasing the gain sacrifices the vertical height of the signal for horizontal distance increases. The signal is 'squashed' down to concentrate the signal strength along the horizontal plane.

gateway A gateway is a general network device that connects two different networks.

Gateway A Sure Cross® Gateway is the wireless sensor network master device used to control network timing and schedule communication traffic. Similar to how a gateway device on a wired network acts as a "portal" between networks, the Sure Cross Gateway acts as the portal between the wireless network and the central control process. Every wireless I/O sensor network requires one Gateway device. Every Sure Cross device is a transceiver, meaning it can transmit and receive data.

GatewayPro The GatewayPro combines the standard Gateway and the DX83 Ethernet Bridge into one device.

ground loop Ground loops are grounds within a system that are not at the same potential. Ground loops can damage electrical systems.

ground plane A ground plane is an electrically conductive plate that acts as a ‘mirror’ for the antenna, effectively doubling the length of the antenna. When using a 1/4 wave antenna, the ground plane acts to ‘double’ the antenna length to a 1/2 wave antenna.

heartbeat mode In heartbeat mode, the Nodes send "heartbeat" messages to the Gateway at specific intervals to indicate the radio link is active. The heartbeat is always initiated by the Node and is used only to verify radio communications. Using the Nodes to notify the Gateway that the radio link is active instead of having the Gateway "poll" the Nodes saves energy and increases battery life.

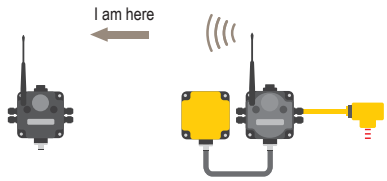

hibernation/ storage mode While in **storage mode**, the radio does not operate. All Sure Cross® radios powered from an integrated battery ship from the factory in storage mode to conserve the battery. To wake the device, press and hold button 1 for 5 seconds. To put any *Flex*Power® or integrated battery Sure Cross radio into storage mode, press and hold button 1 for 5 seconds. The radio is in storage mode when the LEDs stop blinking, but in some models, the LCD remains on for an additional minute after the radio enters storage mode. After a device has entered storage mode, you must wait 1 minute before waking it.

For the Wireless Q45 and Q120 Sensors: While in **storage mode**, the Gateway or Node's radio does not operate. The Gateway or Node ships from the factory in storage mode to conserve the battery. To wake the device, press and hold the binding button (inside the housing on the radio board) for five seconds. To put any Gateway or Node into storage mode, press and hold the binding button for five seconds. The Gateway or Node is in storage mode when the LEDs stop blinking.

hop As a verb, hopping is the act of changing from one frequency to another. As a noun, a hop is the device to device transmission link, such as from the Master device to the Slave device.

hop table A hop table is a precalculated, pseudo-random list of frequencies used by both the transmitter and receiver of a radio to create a hopping sequence.

hysteresis Hysteresis defines how far below the active threshold (ON point) an analog input is required to be before the input is considered OFF. A typical hysteresis value is 10% to 20% of the unit’s range. For more specific details, see *Threshold*.

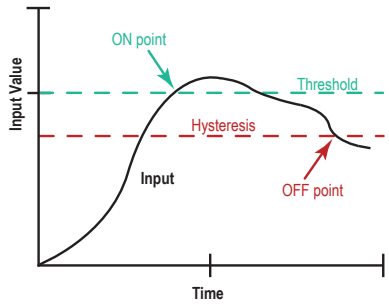

Industrial, Scientific, and Medical Band (ISM) The ISM, or Industrial, Scientific, and Medical band, is the part of the radio spectrum that does not require a license for use. The Sure Cross radios operate in the ISM band.

latency A network's latency is the maximum delay between transmission and reception of a data signal.

lightning arrestor Also called a lightning suppressor, surge suppressor, or coaxial surge protection, lightning arrestors are used in remote antenna installations to protect the radio equipment from damage resulting from a lightning strike. Lightning arrestors are typically mounted close to the ground to minimize the grounding distance.

line of sight Line of sight is the unobstructed path between radio antennas.

link failures A **Host Link Failure** occurs when the defined timeout period, typically about four seconds, elapses with no communication between the host system (or Modbus master device) and the DX80 Gateway.

A **Gateway Link Failure** refers to the radio link between a Node and the Gateway and is determined by three global parameters: Polling Interval, Maximum Missed Message Count, and Re-link Count. When the Node's Gateway Link Failure flag is set and the Gateway determines a timeout condition exists for a Node, any outputs linked from the failing Node are set to the user-defined default state.

A **Node Link Failure** is determined by the polling interval or the out-of-sync timing. When a Node detects a communications failure with the Gateway and the Node Link Failure flag is selected, the output points are set to the user-defined states and the inputs are frozen.

local and non-local registers Local registers are registers specific to the device in question. When discussing a Gateway, the Gateway's local registers include the registers specific to the Gateway in addition to all the Nodes' registers that are stored in the Gateway. Non-local, or remote, registers refer to registers on other Modbus slave devices, such as other MultiHop slave radios or third-party Modbus devices.

master/slave relationship The master/slave relationships is the model for a communication protocol between devices or processes in which one device initiates commands (master) and other devices respond (slave). The Sure Cross network is a master/slave network with the Gateway acting as the master device to the Nodes, which are the slave devices. A PC can also be a master device to a wireless sensor network. See *star networks*.

maximum bad count The maximum bad count refers to a user-established maximum count of consecutive failed polling attempts before the Gateway considers the radio (RF) link to have failed.

maximum misses The maximum misses is the number of consecutive polling messages the Node fails to respond to. For more information, see Polling Rate and Maximum Misses.

median filter When the median filter is turned on, three samples are taken for each analog sensor reading. The high and low values are discarded and the middle value is used as the analog value. Set to zero (0) to turn off the median filter. Set to one (1) to turn on the median filter.

Modbus Modbus is a master-slave communications protocol typically used for industrial applications.

Modbus/TCP Modbus/TCP is an open standard protocol very similar to Modbus RTU except that it uses standard Internet communication protocols.

MultiHop MultiHop networks are made up of one master radio and many repeater and slave radios. The MultiHop networks are self-forming and self-healing networks constructed around a parent-child communication relationship. A MultiHop Radio is either a master radio, a repeater radio, or a slave radio.

The master radio controls the overall timing of the network and is always the parent device for other MultiHop radios. The host system connects to this master radio. Repeater radios extend the range of the wireless network and slave radios are the end point of the wireless network.

For more information, refer to the Sure Cross MultiHop Radios Instruction Manual (p/n 151317).

multipath fade Obstructions in the radio path reflect or scatter the transmitted signal, causing multiple copies of a signal to reach the receiver through different paths. Multipath fade is the signal degradation caused by these obstructions.

network ID The Network ID (NID) is a unique identifier you assign to each wireless network to minimizes the chances of two collocated networks interfering with each other. Assigning different NIDs to different networks improves collocation performance in dense installations.

node A node is any communications point within a network.

Node Nodes are remote I/O slave devices within Banner's wireless sensor networks. Sensors and other devices connect to the Node's inputs or outputs, allowing the Node to collect sensor data and wirelessly transmit it to the Gateway. Every Sure Cross device is a transceiver, meaning it can transmit and receive data.

noise Noise is any unwanted electromagnetic disturbances from within the RF equipment, especially the receiver. Noise is more of a concern when signal levels are low.

omni-directional antenna Omni-directional antennas transmit and receive radio signals equally in all directions.

out of sync/link loss (loss of radio signal) The Sure Cross wireless devices use a deterministic link time-out method to address RF link interruption or failure. When a radio link fails, all pertinent wired outputs are sent to the selected default value/state until the link is recovered, ensuring that disruptions in the communications link result in predictable system behavior. Following a time-out, all outputs linked to the Node in question are set to 0, 1, or hold the last stable state depending on the value selected.

path loss Path loss describes attenuation as a function of the wavelength of the operating frequency and the distance between the transmitter and receiver.

path loss (or link loss) calculations Link loss calculations determine the capabilities of a radio system by calculating the total gain or loss for a system. If the total gain/loss is within a specific range, the radio signal will be received by the radio. **Total Gain = Effective output + Free space loss + Total received power** . Because the transmitter and receiver gains are positive numbers and the free space loss is a larger negative number, the total gain of a system should be negative. A link loss calculation may also be called a link budget calculation.

peer to peer network Peer-to-peer is a model for a communication protocol in which any device in the network can send or receive data. Any device can act as a Master to initiate communication.

polling interval/ rate The Gateway communicates with, or polls, each Node to determine if the radio link is active. The polling rate defines how often the Gateway communicates with each Node. Polling is always initiated by the Gateway and only verifies radio signal communications.

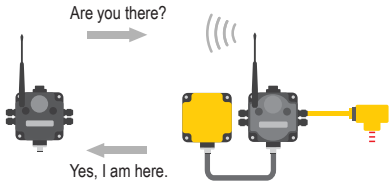

polling interval/ rate and maximum misses The Gateway communicates with, or polls, each Node to determine if the radio link is active. The polling rate, or interval, defines how often the Gateway communicates with each Node. Polling is always initiated by the Gateway and only verifies radio signal communications. Nodes that fail to respond are counted against the ‘Maximum Misses’ for that Node. If the ‘Maximum Misses’ is exceeded for any Node, the Gateway generates an RF timeout error in the Modbus I/O register 8 of the appropriate Node. The ‘Maximum Misses’ is defined as the number of consecutive polling messages that the Node fails to respond to.

radiation pattern An antenna's radiation pattern is the area over which the antenna broadcasts an easily received signal. The radiation pattern/shape changes based on the antenna type and gain.

re-link count The re-link count is the number of completed polling messages the Gateway receives from a Node before a lost RF link is considered re-established and normal operation resumes.

remote antenna A remote antenna installation is any antenna not mounted directly to the Sure Cross wireless device, especially when coaxial cable is used. Always properly install and ground surge suppressors in remote antenna systems.

repeater radio A repeater radio extends the transmission range of a wireless network. Repeaters are typically used in long-distance transmission.

report interval/ rate The report rate defines how often the Node communicates the I/O status to the Gateway. For *Flex*Power® applications, setting the report rate to a slower rate extends the battery life.

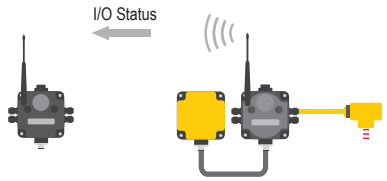

Change of state reporting sets the system to report only when the value crosses the threshold setting.

rotary dial address mode

See: *address mode*

Received Signal Strength Indicator (RSSI)

An RSSI is the measurement of the strength of received signals in a wireless environment. See *Site Survey*.

resistance temperature detector (RTD)

An RTD is a temperature measurement device that measures the electrical resistance across a pure metal. The most commonly used metal is platinum because of its temperature range, accuracy, and stability.

RTDs are used for higher precision applications or for longer wire runs because RTDs can compensate for wire length. In industrial applications, RTDs are not generally used at temperatures above 660° C. Though RTDs are more accurate, they are slower to respond and have a smaller temperature range than thermocouples.

sample high/ sample low (analog I/O)

For analog inputs, the sample high parameter defines the number of consecutive samples the input signal must be above the threshold before a signal is considered active. Sample low defines the number of consecutive samples the input signal must be below the threshold minus hysteresis before a signal is considered deactivated. The sample high and sample low parameters are used to avoid unwanted input transitions.

sample high/ sample low (discrete I/O)

For discrete inputs, the sample high parameter defines the number of consecutive samples the input signal must be high before a signal is considered active. Sample low defines the number of consecutive samples the input signal must be low before a signal is considered low. The sample high and sample low parameters are used to create a filter to avoid unwanted input transitions. The default value is 0, which disables this feature. The value range is 1 through 255.

sample interval/ rate

The sample interval, or rate, defines how often the Sure Cross device samples the input. For battery-powered applications, setting a slower rate extends the battery life.

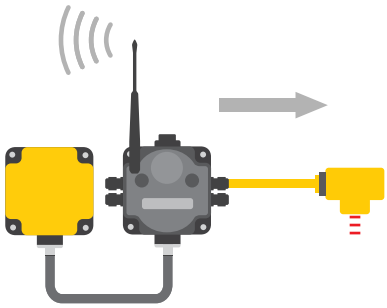

sample on demand

Sample on demand allows a host system to send a Modbus command to any register and require the inputs to immediately sample the sensor and report readings back to the host system. Sampling on demand can be used between the normal periodic reporting.

To use the Sample on Demand feature requires using a host-controlled system capable of sending Modbus commands to the master radio.

signal-to-noise ratio (SNR)

The signal-to-noise ratio is the ratio of the signal to any background noise or noise generated by the medium. In radio terms, it a ratio of the transmitted radio signal to the noise generated by any electromagnetic equipment, in particular the radio receiver. The weaker the radio signal, the more of an influence noise has on radio performance. Like gain, the signal-to-noise ratio is measured in decibels.

The equations for calculating SNR are:

SNR = 20 × log (Vs/Vn) where Vs is the signal voltage and Vn is the noise voltage;
SNR = 20 × log (As/An) where As is the signal amplitude and An is the noise amplitude; or
SNR = 10 × log (Ps/Pn) where Ps is the signal power and Pn is the noise power.

single-point ground All grounds within a system are made to a single ground to avoid creating ground loops.

site survey Conducting a site survey, also known as a radio signal strength indication (RSSI), analyzes the radio communications link between the Gateway (or master radio) and any Node (or slave radio) within the network by analyzing the radio signal strength of received data packets and reporting the number of missed packets that required a retry.

slave ID The slave ID is an identifying number used for devices within a Modbus system. When using more than one Modbus slave, assign each slave a unique ID number.

By default, Gateways are set to Modbus Slave ID 1.

sleep mode During normal operation, the Sure Cross radio devices enter **sleep mode** after 15 minutes of operation. The radio continues to function, but the LCD goes blank. To wake the device, press any button.

slow scan mode (All internal battery models)In slow scan mode, the radio wakes up every 15 minutes to search for its parent radio. If a parent or master radio is not found, the radio goes back to sleep for another 15 minutes.

SMA connector An SMA connector (SubMiniature version A) is a 50 ohm impedance connector used for coaxial RF connections and developed in the 1960s. An SMA connector is typically used between the radio and the antenna.

spread spectrum Spread spectrum is a technique in which the transmitter sends (or spreads) a signal over a wide range of frequencies. The receiver then concentrates the frequencies to recover the information. The Sure Cross radio devices use a version of spread spectrum technology called Frequency Hop Spread Spectrum.

star networks A star topology network is a point to multipoint network that places the network master radio in a center or hub position. Slave radios only transmit messages to the master radio, not to each other. These network layouts can be very flexible and typically operate relatively quickly. Slave radios acknowledge receipt of messages transmitted from the master radio.

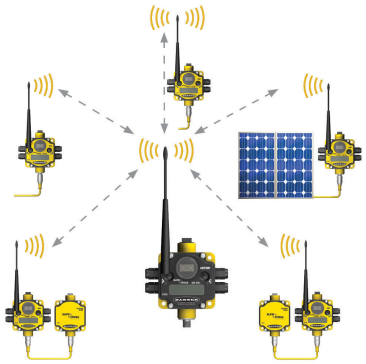

For more information on Banner's star network products, refer to the Sure Cross Performance DX80 Wireless I/O Network Instruction Manual (p/n 132607)

switch power Efficient power management technology enables some *Flex*Power devices to include an internal power output supply, called switch power (SP), that briefly steps up to power sensors (ideally, 4 to 20 mA loop-powered sensors). The warmup time denotes how long the sensor must be powered before a reliable reading can be taken. After the warmup time has passed, the input reads the sensor, then the switched power shuts off to prolong battery life.

system operating margin (fade margin) The system operating margin, or fade margin, is the difference between the received signal level (in dBm) and the receiver sensitivity (also in dBm) required for reliable reception. It is recommended that the receiver sensitivity be more than 10 dBm less than the received signal level. For example, if the signal is about –65 dB after traveling through the air and the radio receiver is rated for -85 dB, the operating margin is 20 dB — an excellent margin.

tau filter Set to zero (0) to turn off the tau filter. Set to 1 (weakest filter) through 6 (strongest filter) to turn on the tau filter. (In the DX80 products, the Low Pass Filter is a combination of the median filter and the tau filter.)

TCP/IP TCP/IP stands for Transfer Control Protocol / Internet Protocol and describe several layers in the OSI model that control the transfer and addressing of information.

time-division multiple access (TDMA) TDMA is a wireless network communication architecture that provides a given slot of time for each device on the network, providing a guaranteed opportunity for each device to transmit to the wireless network master device.

thermistor A thermistor is a temperature-sensitive resistor that changes resistance based on temperature fluctuation.

thermocouple A thermocouple is a temperature measuring device consisting of two dissimilar metals joined together so that the difference in voltage can be measured. Voltage changes in proportion to temperature, therefore the voltage difference indicates a temperature difference.

The different “types” of thermocouples use different metal pairs for accuracy over different temperature ranges. Thermocouples are inexpensive, relatively interchangeable, have standard connectors, and have a wide temperature range of operation. They can be susceptible to noise, with the wire length affecting accuracy. Thermocouples are best suited for applications with large temperature ranges, not for measuring small temperature changes over small ranges.

threshold and hysteresis Threshold and hysteresis work together to establish the ON and OFF points of an analog input. The threshold defines a trigger point or reporting threshold (ON point) for a sensor input. Setting a threshold establishes an ON point. Hysteresis defines how far below the threshold the analog input is required to be before the input is considered OFF. A typical hysteresis value is 10% to 20% of the unit’s range.

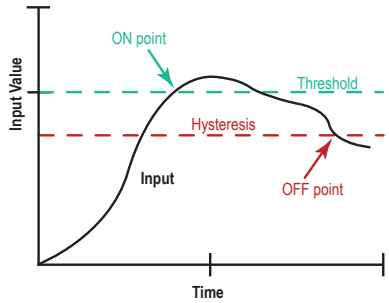

In the example shown, the input is considered on at 15 mA. To consider the input off at 13 mA, set the hysteresis to 2 mA. The input will be considered off when the value is 2 mA less than the threshold.

Setting threshold and hysteresis points prevents inputs from oscillating between ‘on’ and ‘off’ when the input remains close to the threshold point.

timeout interval The Timeout Interval is the total elapsed time before the system flags an error condition. This is a calculated value from Polling Interval (sec) × Maximum Misses.

topology Topology is the pattern of interconnection between devices in a communication network. Some examples include point to point, bus, ring, tree, mesh, and star configurations.

transceiver A transceiver includes both a transmitter and receiver in one housing and shares circuitry; abbreviated as RxTx.

wireless sensor network (WSN) A wireless sensor network is a network of low-power electronic devices that combine sensing and processing ability. The devices use radio waves to communicate to a gateway device, connecting remote areas to the central control process.

Yagi Yagi is the name commonly given to directional antennas. The full name of the antenna is a Yagi-Uda antenna, named for the developers Shintaro Uda and Hidetsugu Yagi, both of Tohoku Imperial University in Sendai, Japan. Yagi antennas may also be called beam antennas or directional antennas.

6.6 Contact Us

Banner Engineering Corp. headquarters is located at:

9714 Tenth Avenue North
Minneapolis, MN 55441, USA
Phone: + 1 888 373 6767

For worldwide locations and local representatives, visit www.bannerengineering.com.

6.7 Warnings

Install and properly ground a qualified surge suppressor when installing a remote antenna system. Remote antenna configurations installed without surge suppressors invalidate the manufacturer's warranty. Keep the ground wire as short as possible and make all ground connections to a single-point ground system to ensure no ground loops are created. No surge suppressor can absorb all lightning strikes; do not touch the Sure Cross® device or any equipment connected to the Sure Cross device during a thunderstorm.

Exporting Sure Cross® Radios. It is our intent to fully comply with all national and regional regulations regarding radio frequency emissions. **Customers who want to re-export this product to a country other than that to which it was sold must ensure the device is approved in the destination country.** The Sure Cross wireless products were certified for use in these countries using the antenna that ships with the product. When using other antennas, verify you are not exceeding the transmit power levels allowed by local governing agencies. This device has been designed to operate with the antennas listed on Banner Engineering's website and having a maximum gain of 9 dBm. Antennas not included in this list or having a gain greater that 9 dBm are strictly prohibited for use with this device. The required antenna impedance is 50 ohms. To reduce potential radio interference to other users, the antenna type and its gain should be so chosen such that the equivalent isotropically radiated power (EIRP) is not more than that permitted for successful communication. Consult with Banner Engineering Corp. if the destination country is not on this list.

6.8 Banner Engineering Corp. Limited Warranty

Banner Engineering Corp. warrants its products to be free from defects in material and workmanship for one year following the date of shipment. Banner Engineering Corp. will repair or replace, free of charge, any product of its manufacture which, at the time it is returned to the factory, is found to have been defective during the warranty period. This warranty does not cover damage or liability for misuse, abuse, or the improper application or installation of the Banner product.

THIS LIMITED WARRANTY IS EXCLUSIVE AND IN LIEU OF ALL OTHER WARRANTIES WHETHER EXPRESS OR IMPLIED (INCLUDING, WITHOUT LIMITATION, ANY WARRANTY OF MERCHANTABILITY OR FITNESS FOR A PARTICULAR PURPOSE), AND WHETHER ARISING UNDER COURSE OF PERFORMANCE, COURSE OF DEALING OR TRADE USAGE.

This Warranty is exclusive and limited to repair or, at the discretion of Banner Engineering Corp., replacement. **IN NO EVENT SHALL BANNER ENGINEERING CORP. BE LIABLE TO BUYER OR ANY OTHER PERSON OR ENTITY FOR ANY EXTRA COSTS, EXPENSES, LOSSES, LOSS OF PROFITS, OR ANY INCIDENTAL, CONSEQUENTIAL OR SPECIAL DAMAGES RESULTING FROM ANY PRODUCT DEFECT OR FROM THE USE OR INABILITY TO USE THE PRODUCT, WHETHER ARISING IN CONTRACT OR WARRANTY, STATUTE, TORT, STRICT LIABILITY, NEGLIGENCE, OR OTHERWISE.**

Banner Engineering Corp. reserves the right to change, modify or improve the design of the product without assuming any obligations or liabilities relating to any product previously manufactured by Banner Engineering Corp. Any misuse, abuse, or improper application or installation of this product or use of the product for personal protection applications when the product is identified as not intended for such purposes will void the product warranty. Any modifications to this product without prior express approval by Banner Engineering Corp will void the product warranties. All specifications published in this document are subject to change; Banner reserves the right to modify product specifications or update documentation at any time. Specifications and product information in English supersede that which is provided in any other language. For the most recent version of any documentation, refer to: www.bannerengineering.com.

For patent information, see www.bannerengineering.com/patents.

Index

A

antenna
- increase height 23
- installing 24
- installing dome 26
- installing N-type 27
- installing remote 24–27
- weatherproofing 25

B

bad EE 50
battery
- install 52, 53
- replace 52, 53
- replacing 54

baud rate 44
binding 14

C

chemical exposure 23
collocation 23

E

ec XX 50
enclosure 22
error code
- RF device time-out 50
- 00 50
- 01 50
- 35 50
- 36 50
- BAD EE 50
- EC 53 50
- EC 54 50
- EC xx 50
- FE 50
- Modbus time-out 50
- No LCD 50
- radio time-out 50

F

forming networks 14
fullscale 47

G

gasket
- main body 52

ground 23
ground wire 24–27

I

I/O isolation 24–27
input value 47

L

lightning arrestor 24–27
link time-out 51

M

mechanical stress 23
Modbus communication
- parameters 43, 44

Modbus time-out
- error code 50

N

network ID 41
no LCD 50
null 47

O

offset 47
outdoor installations 22
overvoltage transients 23

P

parity 44
polling 51

R

radio link failure 51
radio time-out 50, 51
RF device time-out 50

S

seasonal changes 24
setting slave ID 44
slave ID 44
span 47
sunlight exposure 22
surge suppressors 24–27
system error 50

T

time-out
- radio 50, 51
- Modbus 50

U

units
- conversion 47

V

vibration 23

W

water exposure 22