NDS
SURGICAL · IMAGING

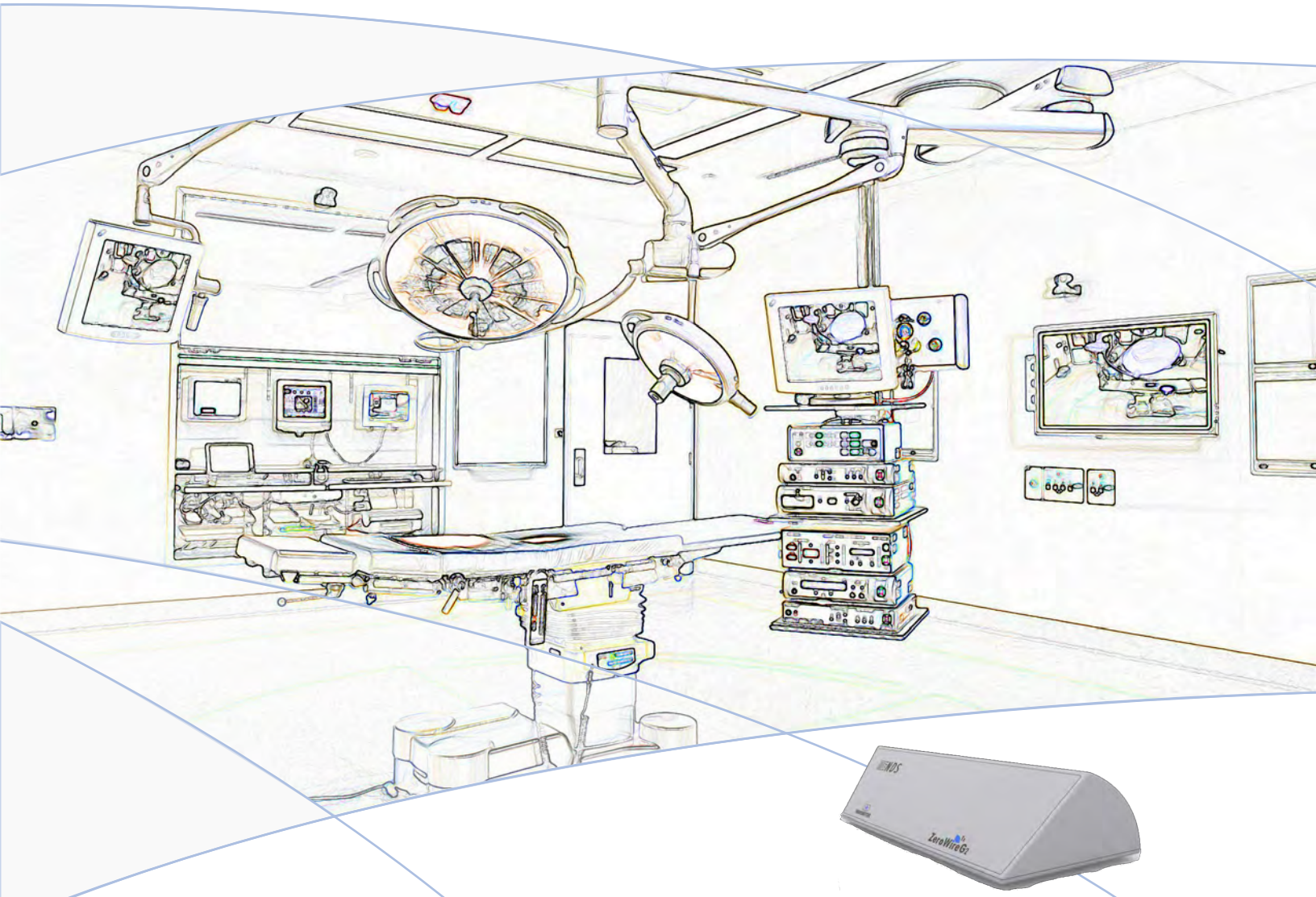

ZeroWire® G2

High-Definition Wireless Video System

USER MANUAL

[ENGLISH]

© 2015 NDS Surgical Imaging, LLC. All rights reserved.
Information in this document has been carefully checked for accuracy; however, no guarantee is given to the correctness of the contents. This document is subject to change without notice. NDSsi provides this information as reference only. Reference to products from other vendors does not imply any recommendation or endorsement.

This document contains proprietary information protected by copyright. No part of this manual may be reproduced by any mechanical, electronic, or other means, in any form, without prior written permission of NDSsi.

All trademarks are the property of their respective owners.

Table of Contents

Tab 1
Warnings and Cautions ---------- ii
Recycling ---------- ii
Declarations of Conformity ---------- iii
Legal Statement ---------- iii

Tab 2
About This Manual ---------- 1
Intended Use and Contraindications ---------- 1
Overview ---------- 1

Tab 3
Connector Panels ---------- 2
Installation ---------- 3
Power Options ---------- 4
Wiring Diagrams ---------- 6
Cable Bend Radius ---------- 6
Setup ---------- 7
Typical Installation ---------- 8
Performance ---------- 8
Positioning and Orientation ---------- 9
Non Line of Sight Operation ---------- 12
Avoiding Co-Channel Interference ---------- 13
Channel Usage ---------- 14
Multi System Installation ---------- 14
Signal Strength ---------- 14

Tab 4
Troubleshooting ---------- 15

Tab 5
Specifications ---------- 16
Supported Video Modes ---------- 17
Cleaning and Disinfecting instructions ---------- 18

Tab 6
Electromagnetic Compatibility (EMC) Tables ---------- 19
Contact ---------- Back

1 Warnings and Cautions

This symbol alerts the user that important information regarding the installation and / or operation of this equipment follows. Information preceded by this symbol should be read carefully in order to avoid damaging the equipment.

This symbol warns user that un-insulated voltage within the unit may have sufficient magnitude to cause electrical shock. Therefore, it is dangerous to make contact with any part inside the unit. To reduce the risk of electric shock, **DO NOT** remove cover (or back). There are no user serviceable parts inside. Refer servicing to qualified service personnel.

This symbol cautions the user that important information regarding the operation and / or maintenance of this equipment has been included. Information preceded by this symbol should be read carefully to avoid damage to the equipment.

This symbol denotes the manufacturer.

EC REP This symbol denotes the manufacturer's European Community representative.

To prevent fire or shock hazards, do not expose this unit to rain or moisture. Also, do not use this unit's polarized plug with an extension cord receptacle or other outlets unless the prongs can be fully inserted. The product is designed to meet the medical safety requirements for a patient vicinity device.
This product is a Class II medical device. No modifications are allowed.
This equipment/system is intended for use by healthcare professionals only.

Safety Compliance:
This device is T.U.V. approved with respect to electric shock, fire and mechanical hazards only in accordance with CAN/CSA C22.2 No. 60601-1 and ANSI/AAMI ES60601-1.

TBD

Safety Compliance:
This device meets the requirements of EN60601-1 so as to conform to the Medical Device Directive 93/42/EEC and 2007/47/EC (general safety information).

Radio Approval:
This device meets the requirements of EN 302 065 V1.2.1 and conforms to Radio and Telecommunications Terminal Equipment (R&TTE) Directive 1999/5/EC.

FCC Identification: UEZ-WT-P42-13, UEZ-WR-P42-11

Industry Canada: 9203A-90T2072, 9203A-90T2071

This product complies to the above standards **only** when used with an NDS supplied medical grade power supply.

Model	ZeroWire G2
Power Supply	Ault MW172KB2400B02 or GlobTek GTM91120-3024-T3A
AC Input	100 to 240 Volts at 50 to 60 Hz.
DC Output	Ault 24 volts at 0.75 amps / GlobTek 24 volts at 1.25 amps

Power Cord: Use a hospital grade power cord with the correct plug for your power source.
Disconnect the power cord from the AC mains. The power cord is the only recognized disconnect device.
The MEDICAL EQUIPMENT should be positioned so that its disconnect device is readily accessible.

The device should be powered from a center tapped circuit when used in the US at voltages over 120 volts. This product is intended for continuous operation.

Recycling:
Follow local governing ordinances and recycling plans regarding the recycling or disposal of this equipment.

Declarations of Conformity

FCC and Council Directives of European Standards:

This device complies with Part 15 of FCC rules and 93/42/EEC **and 2007/47/EC** of the Council Directives of European Standards. Operation is subject to the following two conditions: (1) This device may not cause harmful interference, and (2) this device must accept any interference received, including interference that may cause undesirable results.

1. Use the attached specified cables with the device so as not to interfere with radio and television reception. Use of other cable and adapters may cause interference with other electronic equipment.
2. This equipment has been tested and found to comply with the limits pursuant to FCC part 15 and CISPR 11under clause 3.1 and 8.5. This equipment generates, uses and can radiate radio frequency energy and, if not installed and used in accordance with the instructions, may cause harmful interference to radio communications.
3. This equipment has been tested and found to comply with the limits pursuant to FCC part 15.255(g) on maximum permissive exposure. This equipment generates radio frequency energy and must be installed and used with a minimum separation of 20 cm from the user or patient.

IEC:

This equipment has been tested and found to comply with the limits for medical devices to the IEC 60601-1-2. These limits are designed to provide reasonable protection against harmful interference in a typical medical installation. This equipment generates, uses and can radiate radio frequency energy and, if not installed and used in accordance with the instructions, may cause harmful interference to other devices in the vicinity.

FCC, Council Directives of European Standards and IEC:

There is no guarantee that interference will not occur in a particular installation. If this equipment does cause harmful interference to radio or television reception, which can be determined by turning the equipment off and on, the user is encouraged to try to correct the interference by one or more of the following measures:

- Reorient or relocate the transmitter and / or the receiver.
- Increase the separation between the equipment and receiver.
- Connect the equipment into an outlet on a circuit different from that to which the receiver is connected.
- Consult your dealer or an experienced radio/TV technician for help.

Accessory equipment connected to this device must be certified according to the respective IEC Standards, i.e. IEC 60950-1, for data processing equipment and IEC 60601-1 for medical equipment. Furthermore, all configurations shall comply with the system standard, IEC 60601-1-1. Anyone who connects additional equipment to the signal input part or signal output part configures a medical system, and is therefore responsible that the system complies with the requirements of system standard IEC 60601-1-1. Whoever is responsible for securing the device to a system needs to insure that the mounting equipment used with this device complies to IEC standard 60601-1. If in doubt, consult with your vendor's technical service department.

Legal Statement

NDS sells its products through other medical device manufacturers, distributors and resellers and therefore, purchasers of this NDS product should consult with the entity through which this product was originally purchased regarding the terms of any applicable product warranties provided by such entity, if any.

NDS neither assumes nor authorizes any person to assume for it any other liabilities in conjunction with and/or related to the sale and/or use of its products. To ensure proper use, handling and care of NDS products, customers should consult the product specific literature, instruction manual, and/or labeling included with the product or otherwise available.

Customers are cautioned that system configuration, software, the application, customer data and operator control of the system, among other factors, affect the product's performance. While NDS products are considered to be compatible with many systems, specific functional implementation by customers may vary. Therefore, suitability of a product for a specific purpose or application must be determined by the consumer and is not warranted by NDS.

NDS SPECIFICALLY DISCLAIMS ALL WARRANTIES OF ANY KIND, WHETHER EXPRESS, IMPLIED AND/OR STATUTORY, INCLUDING, BUT NOT LIMITED TO WARRANTIES OF MERCHANTABILITY, FITNESS AND/OR OF SUITABILITY FOR A PARTICULAR PURPOSE, AND NON-INFRINGEMENT WITH RESPECT TO ALL NDS PRODUCTS OR SERVICES. ANY AND ALL OTHER WARRANTIES, REPRESENTATIONS AND/OR GUARANTEES, OF ANY TYPE, NATURE OR EXTENT, BE IT IMPLIED, EXPRESS AND/OR WHETHER ARISING UNDER OR AS A RESULT OF ANY STATUTE, LAW, COMMERCIAL USAGE, CUSTOM, TRADE OR OTHERWISE, ARE HEREBY EXPRESSLY EXCLUDED AND DISCLAIMED.

NDS, its suppliers and/or distributors are not liable, directly or by way of indemnity for any special, incidental, consequential, punitive, exemplary or indirect damages, including but not limited to alleged damages for delayed shipment, non-delivery, product failure, product design or production, inability to use such products or services, loss of future business (lost profits), or from any other cause, whatsoever, in connection with or arising from the purchase, sale, lease, rental, installation or use of such NDS products, these terms and conditions, or with respect to any the terms of any agreement which incorporates these terms and conditions.

SOME JURISDICTIONS DO NOT ALLOW EXCLUSIONS AND DISCLAIMERS OF CERTAIN WARRANTIES OR LIMITATIONS OF LIABILITY, SO THE LIMITATIONS AND/OR EXCLUSIONS, SET FORTH HEREIN, MAY NOT APPLY. IN THAT EVENT LIABILITY WILL BE LIMITED TO THE GREATEST EXTENT PERMITTED BY LAW IN THE SUBJECT JURISDICTION.

The information provided in this document, including all designs and related materials, is the valuable property of NDS and / or its licensors and, as appropriate, they reserve all patent, copyright, and other proprietary rights to this document, including all design, manufacturing reproduction, use, and sales rights thereto, except to the extent said rights are expressly granted to others.

2

About This Manual

This manual is designed to assist the user with installation, setup and operation of the NDS ZeroWire® G2 Wireless HD video system.

A numbered tab on the side of the page denotes the beginning of a section.

The functional descriptions in this manual are representative of:
Part Numbers:
90T2071 = ZeroWire G2 Receiver
90T2072 = ZeroWire G2 Transmitter (Input: DVI and 3G-SDI)

Manual Part Number: 60A0571 Rev A 27 February 2015

Intended Use and Contraindications

The NDSsi ZeroWire G2 Wireless HD Video System is a paired transmitter and receiver, intended for delivery of video signals over a radio-frequency link to a video display during endoscopic and general surgical procedures. The ZeroWire G2 Wireless HD Video System is a non-sterile reusable device not intended for use in the sterile field. It is intended for use by qualified physicians having complete knowledge of these surgical procedures.

Contraindications:

1. These units are non-sterile reusable devices and are not intended for use within a sterile field.
2. This equipment may not be used in the presence of flammable anesthetics mixture with air, oxygen or nitrous oxide.

No part of this product may come in contact with a patient. Never touch the product and a patient at the same time.

⚠ For mission critical applications, we strongly recommend that a replacement ZeroWire G2 transmitter and receiver pair, and a DVI cable be immediately available. Additionally, we recommend that a display that is hard wired to the video source be immediately available whenever a surgical procedure is in progress. See typical installation drawing on page 10.

⚠ OR rooms whose walls and/or ceiling are constructed with metal sheets, may reduce ZeroWire G2 performance. This condition can be mitigated by moving the Tx and Rx closer to each other, setting their line-of-sight to 0 degrees (see item 1 on page 12), and ensuring that there are no obstructions between the Tx and the Rx.

Overview

The ZeroWire G2 transmitter and receiver pair allows wireless delivery of video signals from the DVI or 3G-SDI output of an endoscopic camera processor or other video source to the DVI input of a video display. It operates as a 60Ghz-Based Wireless HD system in compliance with FCC (Part 15) rules governing the unlicensed 57-64 GHz band which is located in the millimetre-wave (mmW) portion of the electromagnetic spectrum. At any time, a minimum separation of 20 cm must be maintained from the operating device and the user or patient.

The system is composed of a transmitter (Tx) and a receiver (Rx) pair. The Tx and Rx are designed to be mounted on the top rear edge of a display on a surgical cart. The Tx may obtain its input video signal from either an endoscopic camera processor or the display's DVI or SDI re-drive outputs. The Rx' output is connected to the display's DVI input The units are powered from the provided 24 VDC power supply ("wall-wart") or through the optional 'Y' adapter cable*. The 'Y' adapter cable is described on page 4. A typical installation is shown on page 8.

⚠ ***Note:** The 'Y' adapter cables are for use with displays that are powered by 24 VDC and whose power connector accepts one of the J2 connectors shown on page 4.

ZeroWire G2 Transmitter

ZeroWire G2 Receiver

The USB port is used for installing updates to the Tx or Rx firmware. It is <u>not</u> a general purpose I/O port

The BOND button allows the bonding of a transmitter to a receiver.

Optional Mounting Brackets:

Extended Height Bracket for 24" and 26" Radiance Displays:

Each step bracket is stamped with a part number (P/N). For Radiance 24" and 26" displays, select the extended height bracket P/N 20C0901 . Replace the left hand mounting screws with 2 of the provided mounting screws. Do not tighten them. Remove the two right hand screws from the VESA mount . With the side stamped FRONT facing the front of the display, slide the step bracket between the VESA mount and the back of the display until notches labeled for the display you are working with fit over the two left hand screws. Replace the right hand screws with the screws provided and tighten all screws. With the flat surface of a ZeroWire G2 Rx or Tx module facing the front of the display, align the slot on the bottom of the module with the top of the bracket and push the module down on the bracket until the module seats. Figure 1 shows the completed assembly.

This side faces the front of the display.

Figure 1

Power Options

ZeroWire G2 transmitters and receivers may be powered from the provided power supply (pictured below), or when used with an NDS display they may be powered from the display's, NDS supplied, power supply via the supplied 'Y' adapter cable. 'Y' adapter cables, shown below, are available for Radiance 19", 24", 26" and 32" displays and Endovue 24" display. 'Y' adapter cables are <u>not</u> available for 42", or 55" Radiance displays.
Power supply is shown on the following page.

'Y' adapter cable (35X0096) for 19", 24" and 26" Radiance Displays and 24" EndoVue Display

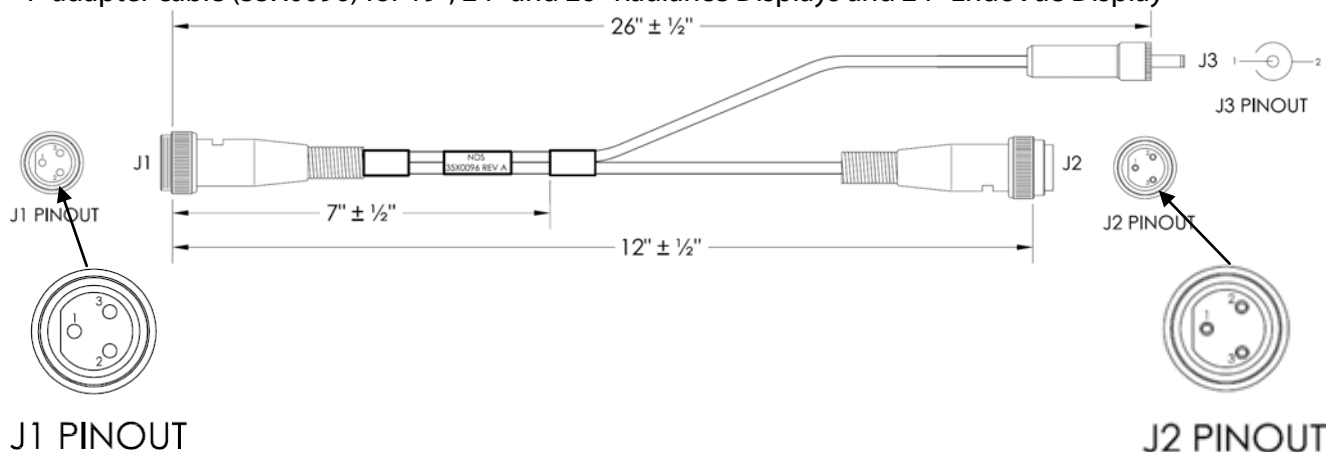

'Y' adapter cable (35X0097) for Radiance 26 G2 HB, 27Ultra, 26 D HB and 32" Radiance Display

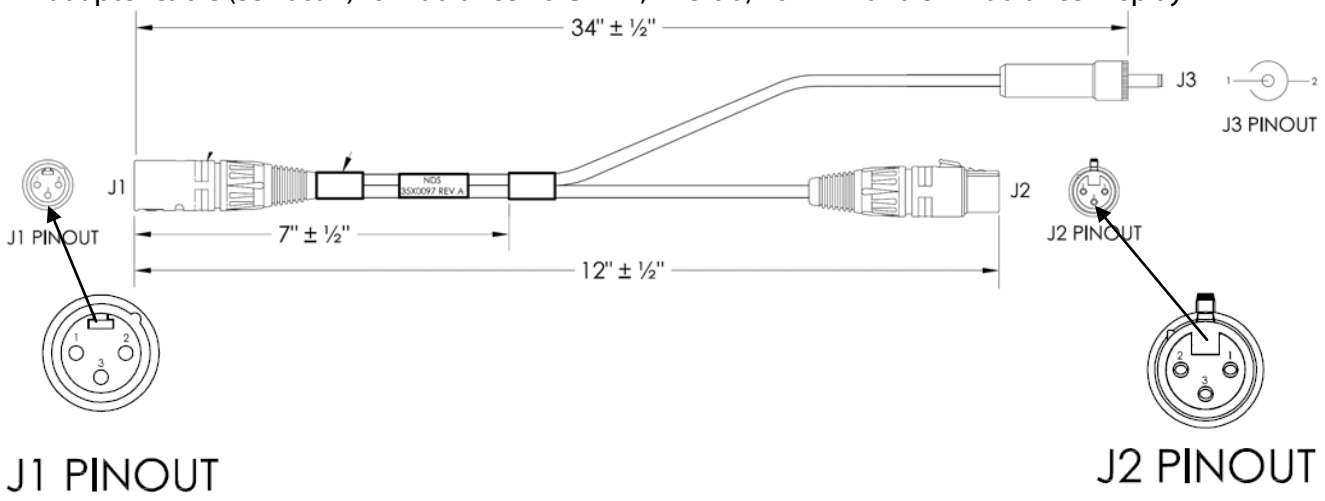

When using the included power supply, select and install the plug adapter that matches the wall socket in your OR.

GlobTek GTM91120-3024-T3A

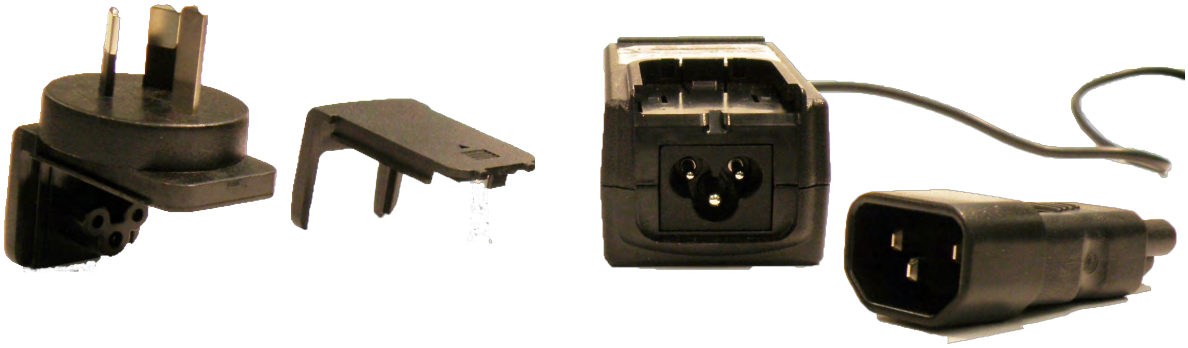

Ault MW172KB2400B02

Provided power supply or J3 of the 'Y' adapter connects here.

Wiring Diagrams

Display Mounted Rx Wiring diagram

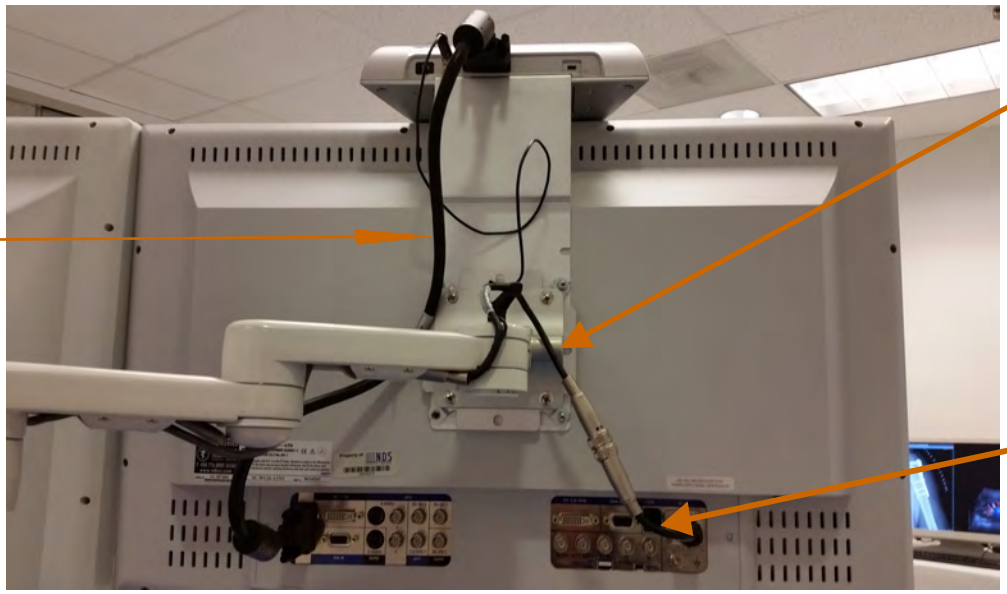

Cable Bend Radius

⚠ We recommend that the bend radius of metallic cables be no less than 2.5 inches (63 mm) or 7 times the diameter of the cable whichever is greater. Sharper bends may damage the cable and / or degrade the video signal.

Setup

Bonding the Transmitter (Tx) and Receiver (Rx)

Before the ZeroWire G2 wireless system can be put into service , the Tx and Rx pair must be bonded. Connect an included power supply or a 'Y' Adapter cable to a Tx and an Rx unit. See pages 4 and 5 for 'Y' Adapter cable information and Power Connector location.
Once a Tx and Rx pair is bonded, they remain bonded until the Tx is explicitly bonded to another Rx or the Rx is explicitly bonded to another Tx. **Note**: If a bonded pair is turned off they will automatically bond to each other when they are turned on again.

Bonding Procedure:

1. Press and hold the "bond" button (see Figure 1 for location) on the Tx unit for 5 seconds, then release. Next press and hold the "bond" button (see Figure 1 for location) on the Rx unit until for 5 seconds, then release.
2. When the bonding process is complete each unit's LED will be steady blue.

⚠ ZeroWire G2 Tx and Rx units <u>are not</u> compatible with earlier ZeroWire Tx and Rx units.

Figure 1

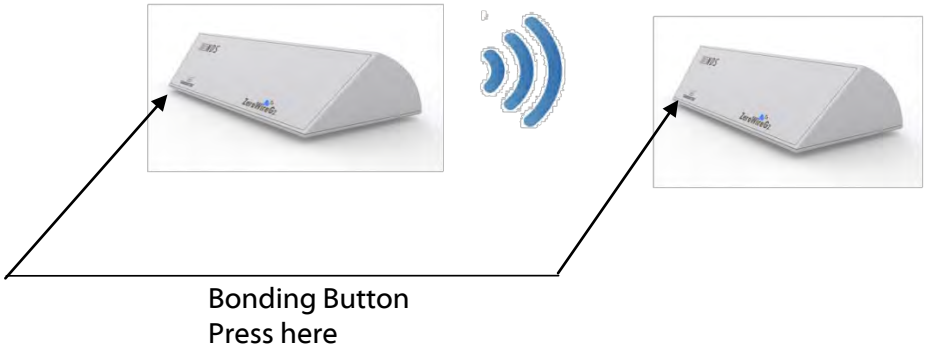

Passing Video:

Before attempting bonding, connect a DVI or SDI video source to the Tx unit and a display to the Rx unit via its DVI output (Figure 2). Once the bonding completed, the indicator LED's should turn blue and the source image should appear on the display. This completes the basic setup.

Figure 2

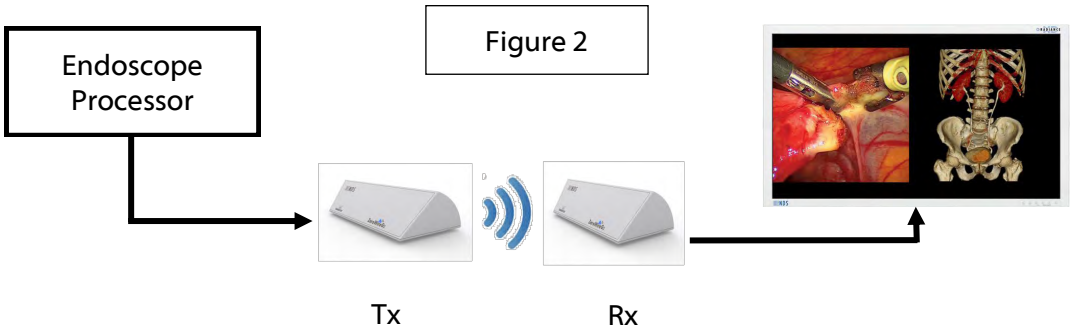

Note:
The transmitter and receiver are not limited to line-of-sight operation, i.e., the pair will operate despite the presence of intervening obstacles. However, neither unit should be completely surrounded by metallic objects.

Typical Installation

Detailed Installation and Setup information starts on the following page.

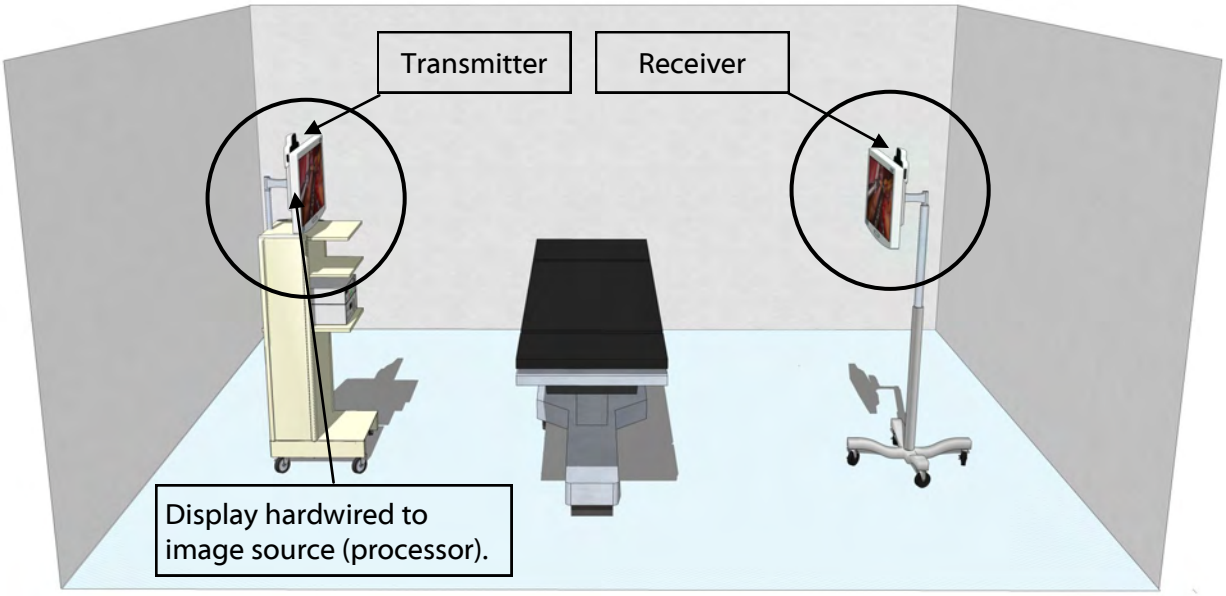

NDSsi recommends ZeroWire G2 for primary and secondary displays. However, for patient safety a display that is cable connected to the video source shall be immediately available whenever a surgical procedure is in progress.

Performance

Performance:

ZeroWire G2 Wireless HD Video System products are intended and optimized for use in a surgical operating room (OR). Use outside of an OR environment is not recommended.

The following steps will help you to achieve optimal performance of the ZeroWire G2 system:

1. Mount both components at least 5 feet (1.5 m) from the floor.
2. Ideally, both the transmitter and receiver should be at the same height.
3. For a reliable video link, the distance between transmitter and receiver should be 15 feet (5 m) or less .
4. The transmitter and receiver should be facing each other and be visible to each other in free air space.
5. For non line of sight applications, we recommend that the Tx and Rx be located no more than 6 feet (1.8 m) from the walls of the OR.

Positioning and Orientation

1. Due to the shape of the antenna's signal field (image 1), both Tx and Rx units should be installed so they are vertical within + or - 10°, and horizontal within + or - 10°.

2. Vertical Alignment:
   Vertical alignment should be within + or - 10° of vertical.

3. Horizontal Alignment:
   Horizontal alignment should be within + or - 10° of horizontal.

Positioning and Orientation is continued on the following page.

1

1. Elevation:
The Tx and Rx should be positioned at least 5 feet (1.5 m) above the floor, be at the same height, and, preferably, with the gray (front) surfaces of the Tx and Rx facing directly at each other.

2. Separation:
ZeroWire G2 operates correctly with a Tx and Rx separation of up to 30 feet (10 m). However, in the case of most OR environments, best results are achieved with a Tx and Rx separation distance of up to 8 feet (2.4 m).

Positioning and Orientation is continued on the following page.

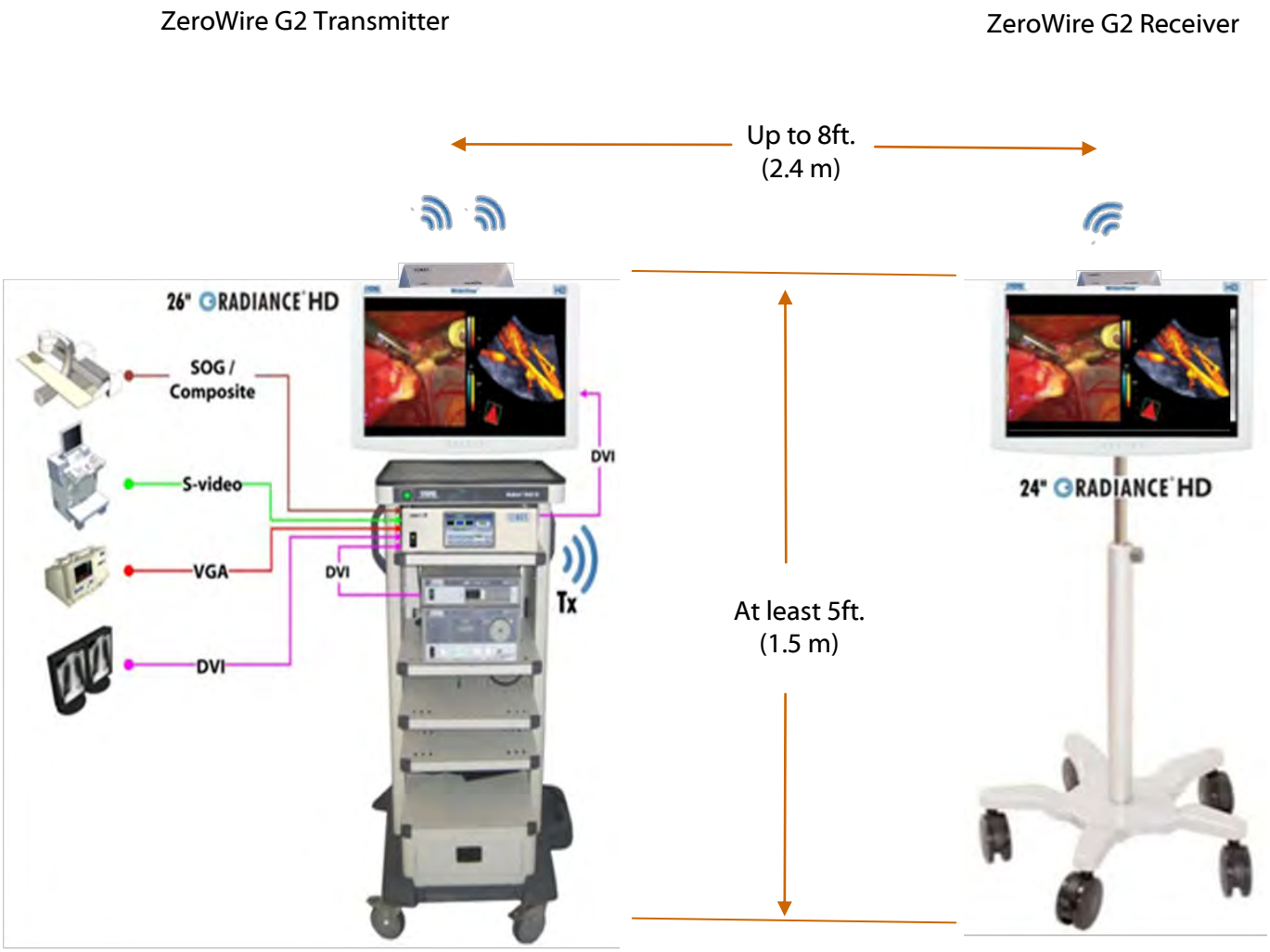

Test results indicate that ZeroWire G2 achieves a better signal-to-noise ratio when the Tx and Rx are oriented at certain angles relative to one another.

1. Optimum link quality is achieved when the Tx and Rx are aligned at 0° relative to each other.

2. Acceptable link quality is achieved when the Tx and Rx are aligned at angles between 0 to 45°, 90° and 180° relative to each other.

3. Aligning the Tx and Rx at 180° relative to each other provides the least acceptable link quality.

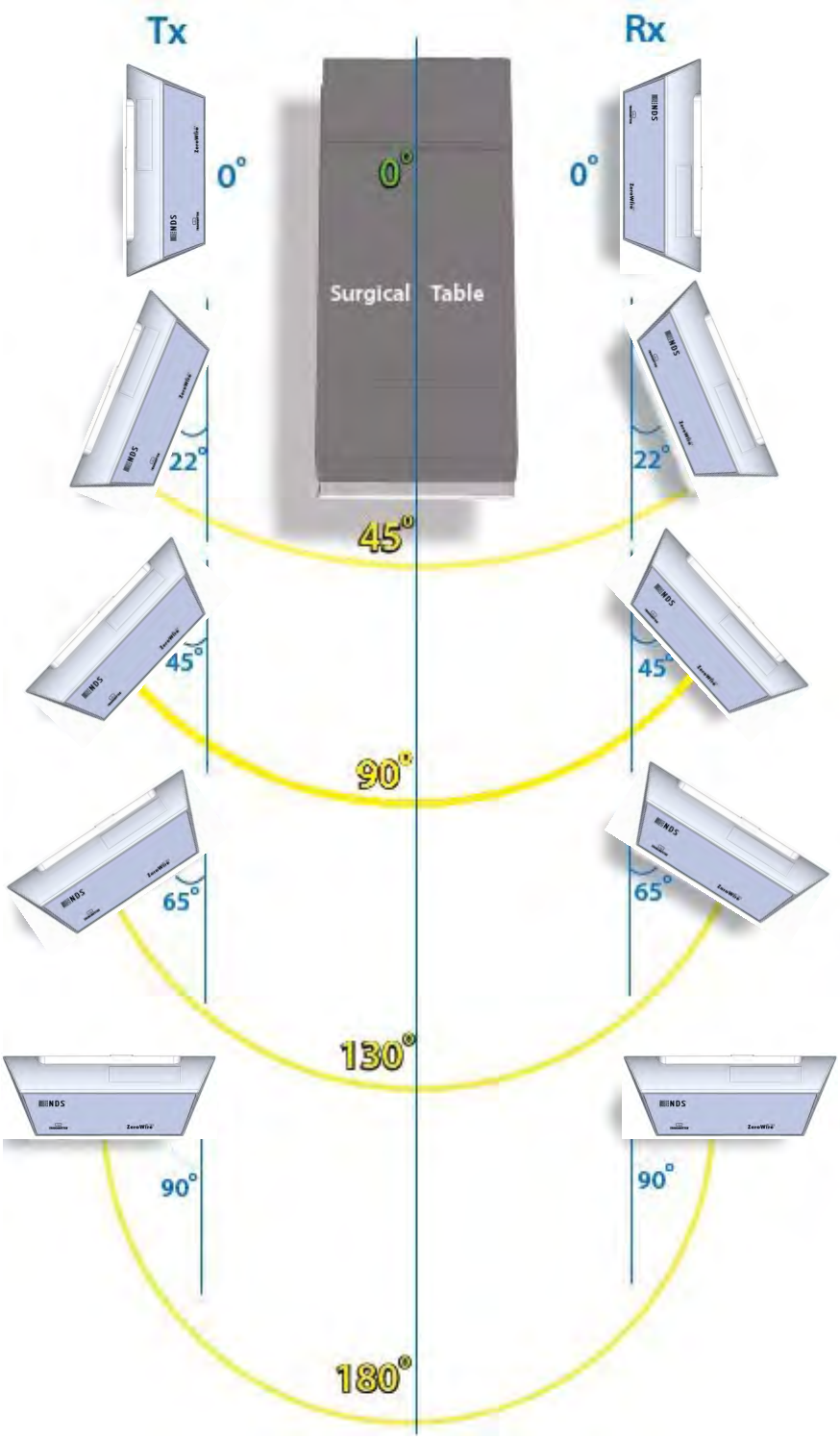

Non Line of Sight Operation

1. The ZeroWire G2 system can maintain a wireless link with partial obstructions. However, best performance is realized with a clear line-of-sight. In an OR environment, the ceiling mounted boom system and its spring arm junctions, along with surgical light heads, are large metal structures that can potentially block RF signals if they obstruct the line-of-sight between the Tx and Rx (see image 1 below). Preferably, the surgical lights should be positioned out of the way or raised above the line-of-sight. If an object must obstruct the line-of-sight, the best option is to position it half way between the Tx and the Rx.

   OR rooms whose walls and/or ceiling are constructed with metal sheets, may reduce ZeroWire G2 performance. This condition can be mitigated by moving the Tx and Rx closer to each other, setting their line-of-sight to 0 degrees (see item 1 on the previous page), and ensuring that there are no obstructions between the Tx and the Rx.

1

Avoiding Co-Channel Interference

If the ZeroWire G2 deployment is a typical one-system per room, there is essentially no restriction. The transmitter's Channel Selection feature picks the channel that is least susceptible to interference from the available six channels based on the result of its scan at power on.

Some of the factors affecting how well the ZeroWire G2 channels are isolated are listed below.

1) The thickness and material of the room walls.
2) The opening and closing of room doors.
3) The room's ceiling structure and the materials used in its construction.

***Notes:**

ZeroWire G2 Tx / Rx pairs must be installed in the same room. Cross room operation is not supported
When multiple Tx /Rx pairs are installed in a given room, each pair must be powered up separately.

Channel Usage

The user has the only option to have ZeroWire G2 systems operate using the Auto channel setting. The recommendations below should be used to determine the appropriate setting.

1. ZeroWire G2 Tx and / or Rx units cannot be used with earlier Zerowire Tx and / or Rx units.
2. Up to three ZeroWire G2 systems may be operated in the same room. The transmitters and receivers should be separated by at least 3 ft (1 m) within the room.
3. Groups of three ZeroWire G2 systems may be set in multiple rooms, providing the rooms are spaced at least 25 ft (7.6 m) apart.
4. ZeroWire G2 Tx and / or Rx should not be installed in metal cabinets or surrounded by metallic objects, as this will prevent the Tx from communicating with the Rx .

Multi System Installation

Multiple Systems:

When two or three systems are to be installed in a given OR use the following procedure:
If the Tx and Rx units have not been bonded apply power to one Tx and one Rx then follow the Bonding Procedure described on page 7. Turn second Tx and Rx pair on and repeat the Bonding Procedure. Turn on the third pair and repeat the Bonding Procedure. Tx and Rx pairs must be bonded one pair at a time. We recommend that bonded pairs be labeled to facilitate installation and troubleshooting.

Signal Strength

The bar is displayed for 60 seconds at power up. The Signal Strength bar is automatically displayed when the link re-establishes after the link disconnection. Sample Signal Strength bars are shown below.

Excellent link quality.

Good link quality.

Acceptable link quality, some pixilation may occur.

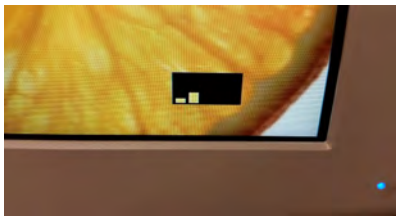

Link down or poor link quality, frequent pixilation and/or screen "freeze".

Troubleshooting

Problem	Possible Causes
Indicator LED is not on.	Loose Power Connector: Verify that the power source connector is fully inserted into the unit's power connector. 'Y' Cable: If you are using the 'Y' cable to supply power to the unit, confirm that it is connected to a power supply and that the power supply is energized. Stand Alone Power Supply: If the stand alone power supply is being used confirm that it is fully inserted into the wall socket. Wall Socket: Some wall sockets have on / off switches built in. If the socket you are using has a built in switch, check that it is in the on position. Additional Information: See Power Options on pages 4 and 5.

Poor or intermittent video	
Possible causes	Remedial Action
Tx and RX are spaced more than 30 feet (10 m) apart.	Reduce the spacing between the Tx and Rx to 15 feet (5 m) or less. See Tx to Rx Range specification on page 16.
Tx and Rx are not aligned properly	See Tx / Rx alignment recommendations on page 11.
DVI or SDI (Tx only) connections	Confirm that the cables are properly connected.
Unsupported video mode	Verify that the applied video mode is supported. See the Supported Video Modes table on page 17.
DVI or SDI (Tx only) cables	Replace the cables one at a time and check the video display. If the video signal displays properly after a cable is replaced, discard the cable you just replaced.
Crosstalk	See Avoiding Co-Channel Interference on page 13
Low signal strength	See Signal Strength on page 14.
The Tx and Rx are switched	Verify that the video source is connected to the Tx, not the Rx.

LED Indicators	
LED State	Description
Blue and blinking slowly	The unit is scanning for a channel.
Blue and flashing rapidly	Unit is attempting to link.
Blue and steady	The unit is sending (Tx) or receiving (Rx) video data.

Wireless Signal Type	60Ghz Wireless HD band (WIHD)
Frequency Band	57 to 64 GHz
Number of Channels	6
RF Power Out (maximum)	27 dBm / MHz EIRP
Tx to Rx Range	Up to 15 ft (5 m) [a]
Data Rate	0.952 to3.807 Gb/s
System Latency	< 1 frame
Compression Technology	None
Hardware Encryption	256 bit AES
Video Inputs (Transmitter)	DVI, 3G SDI , HD-SDI and SDI
Video Outputs (Receiver)	DVI
Power Consumption	14 Watts (Max)
Ault Power Supply	100-240VAC 50/60Hz input 24V @ .75A DC (18 watts) output
Physical Dimensions	9.5" x 3.5" x 2.0" (238mm x87.9mm x 50.0mm)
ZeroWire **G2** Weight (Tx or Rx) excluding base	1.0 lbs (0.45 Kg)
Mounting Base Weight	0.8 lbs (0.36 Kg)
Operating Temperature	32° to 104° F (0° to 40° C)
Operating Humidity	20% to 90% RH, non-condensing
Operating Altitude	6,600 ft (2,000 m)
Storage Temperature	-4° to 140° F (-20° to 60° C)
Storage Humidity	< 70% RH (non-condensing)
Transport Humidity	< 70% RH (non-condensing)
Storage Altitude	33,000 ft (10,000 m)

a. The effective range may vary depending upon the environment in which the product is operating. Follow the product's Setup section to achieve optimum performance and range.

Supported Video Modes

Name	Horizontal Active Pixels	Horizontal Total Pixels	Vertical Active Pixels	Vertical Total Pixels	Frame / Field Rate (Hz)
1080p60	1920	2200	1080	1125	60
1080p50	1920	2640	1080	1125	50
1080p24	1920	2640	1080	1125	25
1080p60 special mode	1920	2184	1080	1125	60
1080p50 special mode	1920	2270	1080	1125	50
1080i60	1920	2200	1080	562	60
1080i50	1920	2640	1080	562	50
720p60	1280	1650	720	750	60
720p50	1280	1980	720	750	50
480p60	720	870	480	525	60
576p50	720	864	576	625	50
VGA	640	800	480	525	60
SVGA	800	1056	600	628	60
XGA	1024	1344	768	806	60
SXGA	1280	1688	1024	1066	60
Special camera mode	1440	1904	900	932	60
Special camera mode	1024	1124	1024	1068	30
Special camera mode	1024	1152	1024	1250	25
Special camera mode	1280	1800	1024	1200	50

Cleaning and Disinfecting Instructions

⚠ Prior to cleaning and surface disinfection, the unit should be turned **OFF** and disconnected from its power source.

Cleaning:
Thoroughly wipe all exterior surfaces with a lint-free cloth that has been dampened with soap and water only. Remove residual detergent by wiping all exterior surfaces with a lint-free cloth dampened with distilled water. Allow the unit to air dry.

⚠ **Cautions:**

Do not allow liquids to enter the interior of the unit, and do not permit exterior surfaces to come into contact with unacceptable solvents such as those listed below, as severe damage to the unit may result.

Unacceptable solvents:
MEK (Methyl Ethyl Ketone)
Toluene
Acetone

Electromagnetic Compatibility (EMC) Tables

ZeroWire G2 has been tested in an OR environment and did not interfere with electrosurgical, ultrasound, X-Ray, medical displays and life monitoring equipment. Neither did the aforementioned equipment interfere with ZeroWire G2. Additionally, since ZeroWire G2 operates in 57 – 64 GHz, typically wireless LAN and mobile phones will not cause interference as they operate outside the ZeroWire G2 frequency range. However, the presence of a source of interference within ZeroWire G2 frequency range may result in intermittent operation and reduced image quality or the link could go down while the interference exists. Prior to any procedure in the OR, it is required that any such equipment be turned off and verify that the system operates as expected. If any anomalous behavior is observed, it must be corrected prior to using the system in any surgical procedures.

ZeroWire G2 transmitters should be separated by at least 20 inches (0.5 m). ZeroWire G2 transmitters (Tx) or receivers (Rx) should not be installed in metal cabinets or surrounded by metallic objects, as this will prevent the Tx from communicating with the Rx.

During installation the ZeroWire G2 link video quality should be tested with the Tx and Rx at different orientation angles, acceptable orientation angles are shown on page 11. Non Line of Sight Operation is discussed on page 12. We recommend that the system be thoroughly tested prior to using it in any surgical procedures.

Do not use power supplies or cable accessories with the ZeroWire G2 other than those specified in this manual. Excessive leakage currents, elevated electromagnetic emissions, or insufficient interference immunity may occur.

All medical electronic devices, including ZeroWire G2, must conform to the requirements of IEC 60601-1-2. Precautions, adherences to the EMC guideline information provided in this manual and verification of all medical devices in simultaneous operation are required to ensure the electromagnetic compatibility and co-existence of all other medical devices prior to a surgical procedure.

The EMC tables on the next three pages are provided for your reference.

Guidance and manufacturer's declaration – electromagnetic emissions		
The product is intended for use in the electromagnetic environment specified below. The customer or the user of the product should assure that it is used in such an environment.		
Emissions	Compliance	Electromagnetic environment-- guidance
RF emissions CISPR 11	Group 1	The product uses RF energy only for its internal function. Therefore, its RF emissions are very low and are not likely to cause any interference in nearby electronic equipment.
RF emissions CISPR 11	Class A	The product is suitable for use in all establishments, including domestic establishments and those directly connected to the public low-voltage power supply network that supplies buildings used for domestic purposes.
Harmonic emissions IEC 61000-3-2	Not Applicable	
Voltage fluctuations/ flicker emissions IEC 61000 -3-3	Not Applicable	

Guidance and manufacturer's declaration 211; electromagnetic immunity			
The product is intended for use in the electromagnetic environment specified below. The customer or the user of the product should assure that it is used in such an environment.			
Immunity test	IEC 60601 test level	Compliance level	Electromagnetic environment guidance
Electrostatic discharge (ESD) IEC 61000-4-2	±6 kV contact ±8 kV air	±6 kV contact ±8 kV air	Floors should be wood, concrete or ceramic tile. If floors are covered with synthetic material, the relative humidity should be at least 30 %.
Electrical fast transient/burst IEC 61000-4-4	±2 kV for power supply lines	±2 kV for power supply lines	Mains power quality should be that of a typical commercial or hospital environment.
Surge IEC 61000-4-5	±1 kV line(s) and neutral	±1 kV line(s) and neutral	Mains power quality should be that of a typical commercial or hospital environment.
Voltage dips, short interruptions and voltage variations on power supply input lines IEC 61000-4-11	<5 % U_T (>95 % dip in U_T) for 0,5 cycle 40 % U_T (60 % dip in U_T) for 5 cycles 70 % U_T (30 % dip in U_T) for 25 cycles <5 % U_T (>95 % dip in U_T) for 5s	<5 % U_T (>95 % dip in U_T) for 0,5 cycle 40 % U_T (60 % dip in U_T) for 5 cycles 70 % U_T (30 % dip in U_T) for 25 cycles) < 5 % U_T (>95 % dip in U_T) for 5s	Mains power quality should be that of a typical commercial or hospital environment. If a dips or an interruption of mains power occurs, the current of the product may be dropped off from normal level, it may be necessary to use uninterruptible power supply or a battery.
Power frequency (50/60 Hz) magnetic field IEC 61000-4-8	3 A/m	Not applicable	Not applicable
NOTE U_T is the a.c. mains voltage prior to application of the test level			

Guidance and manufacturer's declaration – electromagnetic immunity			
The product is intended for use in the electromagnetic environment specified below. The customer or the user of the product should assure that it is used in such an environment.			
Immunity test	IEC 60601 test level	Compliance level	Electromagnetic environment – guidance
Conducted RF IEC 61000-4-6	3 Vrms 150 kHz to 80 MHz	3 Vrms	Portable and mobile RF communications equipment should be used no closer to any part of the product, including cables, than the recommended separation distance calculated from the equation applicable to the frequency of the transmitter. Recommended separation distance $d = 1{,}2\sqrt{P}$ $d = 1{,}2\sqrt{P}$ 80 MHz to 800 MHz $d = 2{,}3\sqrt{P}$ 800 MHz to 2,5 GHz where P is the maximum output power rating of the transmitter in watts (W) according to the transmitter manufacturer and d is the recommended separation Distance in metres (m). Field strengths from fixed RF transmitters, as determined by an electromagnetic site survey,a should be less than the compliance level in each frequency range.b Interference may occur in the vicinity of equipment marked with the following symbol:
Radiated RF IEC 61000-4-3	3 V/m 80 MHz to 2.5 GHz	3 V/m	
NOTE 1 At 80 MHz and 800 MHz, the higher frequency range applies. NOTE 2 These guidelines may not apply in all situations. Electromagnetic propagation is affected by absorption and reflection from structures, objects and people.			
a. Field strengths from fixed transmitters, such as base stations for radio (cellular/cordless) telephones and land mobile radios, amateur radio, AM and FM radio broadcast and TV broadcast cannot be predicted theoretically with accuracy. To assess the electromagnetic environment due to fixed RF transmitters, an electromagnetic site survey should be considered. If the measured field strength in the location in which the product is used exceeds the applicable RF compliance level above, the product should be observed to verify normal operation. If abnormal performance is observed, additional measures may be necessary, such as re-orienting or relocating the product. b. Over the frequency range 150 kHz to 80 MHz, field strengths should be less than 3 V/m.			

Recommended separation distances between portable and mobile RF communications equipment and the product			
The product is intended for use in an electromagnetic environment in which radiated RF disturbances are controlled. The customer or the user of the product can help prevent electromagnetic interference by maintaining a minimum distance between portable and mobile RF communications equipment (transmitters) and the product as recommended below, according to the maximum output power of the communications equipment.			
Rated maximum output power (W) of transmitter	Separation distance, in meters according to frequency of transmitter		
	150 kHz to 80 MHz	80 MHz to 800 MHz	800 MHz to 2.5 GHz
0.01	0.12	0.12	0.23
0.1	0.38	0.38	0.73
1	1.2	1.2	2.3
10	3.8	3.8	7.3
100	12	12	23
For transmitters rated at a maximum output power not listed above, the recommended separation distance d in meters (m) can be estimated using the equation applicable to the frequency of the transmitter, where P is the maximum output power rating of the transmitter in watts (W) according to the transmitter manufacturer. NOTE 1 At 80 MHz and 800 MHz, the separation distance for the higher frequency range applies. NOTE 2 These guidelines may not apply in all situations. Electromagnetic propagation is affected by absorption and reflection from structures, objects and people.			

ISO 9001:2008 and ISO 13485:2003;
FDA Registration # 2954921

Corporate Headquarters
5750 Hellyer Avenue
San Jose, CA 95138 (USA)
Tel: 408 776 0085
Toll Free: 866 637 5237
Email: info@ndssi.com

Europe
Nijverheidscentrum 28
2761 JP Zevenhuizen (ZH)
The Netherlands EC REP
Tel: + 31 180 63 43 56
Email: info-EMEA@ndssi.com

Asia Pacific
GSI Group Japan Corporation
East Square Omori,
6-20-14 Minamioi, Shinagawa-ku
Tokyo 140-0013, Japan
Tel: +81-3-5753-2466
Email: info@ndssi.jp

60G0571