Annex acc. to FCC Title 47 CFR Part 15
relating to
G. Lufft Mess- und Regeltechnik GmbH
WS100

Annex no. 5
User Manual
Functional Description

Title 47 - Telecommunication
Part 15 - Radio Frequency Devices
Subpart C – Intentional Radiators
ANSI C63.4-2014
ANSI C63.10-2013

Deutsche Akkreditierungsstelle
D-PL-12053-01-00

m. dudde hochfrequenz-technik **Rottland 5a** **D-51429 Bergisch Gladbach/ Germany** **Tel: +49 2207-96890** **Fax +49 2207-968920**

Manual
Intelligent Weather Sensors

WS800-UMB
WS700-UMB
WS600-UMB / WS601-UMB
WS501-UMB / WS502-UMB / WS503-UMB / WS504-UMB
WS510-UMB
WS500-UMB
WS400-UMB / WS401-UMB
WS301-UMB / WS302-UMB / WS303-UMB / WS304-UMB
WS310-UMB
WS300-UMB
WS200-UMB
WS100-UMB

www.lufft.com

48.7230-WSX-E
Document version V34 (03/2017)

© G. Lufft Mess- und Regeltechnik GmbH, Fellbach, Germany. We reserve the right to make technical changes at any time without notice.

Contents

1 Please Read Before Use ... 5
1.1 Symbols Used ... 5
1.2 Safety Instructions ... 5
1.3 Designated Use ... 5
1.4 Incorrect Use ... 5
1.5 Warranty ... 5
1.6 Brand Names ... 5
2 Scope of Delivery ... 6
3 Order Numbers ... 7
3.1 Accessories ... 9
3.2 Spare Parts ... 9
3.3 Additional Documents and Software ... 9
4 Equipment Description ... 10
4.1 Air Temperature and Humidity ... 10
4.2 Air Pressure ... 11
4.3 Precipitation ... 11
4.4 Wet Bulb Temperature ... 11
4.5 Specific Enthalpy ... 11
4.6 Air Density ... 11
4.7 Wind ... 11
4.8 Compass ... 11
4.9 Heating ... 11
4.10 Global Radiation ... 11
4.11 Lightning Sensor ... 11
4.12 External Temperature Sensor ... 11
4.13 External Rain Gauge ... 12
4.14 (WS100-UMB only:) Impulse Output for Rain Gauge Simulation ... 12
4.15 Sensor Technology (example: WS600-UMB) ... 13
5 Generation of Measurements ... 14
5.1 Current Measurement (act) ... 14
5.2 Minimum and Maximum Values (min and max) ... 14
5.3 Average Value (avg) ... 14
5.4 Vectorial Average Value (vct) ... 14
6 Measurement Output ... 15
6.1 Air and Dewpoint Temperature ... 15
6.2 Wind Chill Temperature ... 15
6.3 Humidity ... 15
6.4 Air Pressure ... 15
6.5 Wet Bulb Temperature ... 16
6.6 Specific Enthalpy ... 16
6.7 Air Density ... 16
6.8 Wind Speed ... 17
6.9 Wind Direction ... 17
6.10 Wind Measurement Quality ... 18
6.11 Compass ... 18
6.12 Precipitation Quantity - Absolute ... 19
6.13 Precipitation Quantity - Differential ... 19
6.14 Precipitation Intensity ... 19
6.15 Precipitation Type ... 20
6.16 Heating Temperature ... 20
6.17 Global Radiation ... 20
6.18 Lightning Sensor ... 21

6.19 Service Messages ... 21
6.20 Drop Diameter Distribution (WS100 only) ... 22
7 Installation ... 23
7.1 Fastening ... 23
7.2 North Alignment ... 24
7.3 Selecting the Installation Location ... 25
8 Connections ... 27
8.1 Supply Voltage ... 28
8.2 RS485 Interface ... 28
8.3 Connection to ISOCON-UMB (8160.UISO) ... 29
8.4 Use of Surge Protection (8379.USP) ... 29
8.5 Connection of External Temperature and Precipitation Sensors ... 29
8.6 (WS100-UMB only:) Connection of Impulse Output for Rain Gauge Simulation ... 29
9 Commissioning ... 30
10 Configuration and Test ... 31
10.1 Factory Settings ... 32
10.2 Configuration with the UMB-Config-Tool ... 32
10.3 Function Test with UMB-Config-Tool ... 39
10.4 Operating Modes of the Smart Weather Sensor ... 40
10.5 Operating Modes for Equipment Heating ... 42
11 Firmware Update ... 44
12 Maintenance ... 44
12.1 Maintenance of the Rain Gauge ... 45
13 Technical Data ... 46
13.1 Measuring Range / Accuracy ... 48
13.2 Drawings ... 51
14 EC Certificate of Conformity ... 63
14.1 WS100 FCC Compliance Statement (US) ... 64
14.2 WS 100 IC Compliance Statement (CA) ... 64
15 Fault Description ... 65
16 Disposal ... 66
16.1 Within the EC ... 66
16.2 Outside the EC ... 66
17 Repair / Corrective Maintenance ... 66
17.1 Technical Support ... 66
18 External Sensor ... 67
18.1 External Temperature and Precipitation Sensors ... 67
19 Appendix ... 69
19.1 Channel List Summary ... 69
19.2 Channel List Summary per TLS2002 FG3 ... 71
19.3 Communication in Binary Protocol ... 72
19.4 Communication in ASCII Protocol ... 75
19.5 Communication in Terminal Mode ... 78
19.6 Communication in SDI-12 Mode ... 81
19.7 Communication in Modbus Mode ... 124
19.8 Communication: XDR Protocol ... 136
20 List of Figures ... 148
21 Index ... 149

1 Please Read Before Use

This manual is valid for devices of the Lufft WS family with device version 200 or higher(2015), WS100-UMB with device version 010 (2017) or higher.Some functions or features specified in this manual may not be available or may not be valid with older device versions. The device version is indicated as the last number of the serial number, e.g.: the device with SN: 063.1010.0701.**021**has the device version 21.

If you are using an older device of the WS family, please refer to the manual for device versions up to 49 or for versions prior to 30 (www.lufft.com/en/support/downloads).

1.1 Symbols Used

Important information concerning potential hazards to the user

Important information concerning the correct operation of the equipment

1.2 Safety Instructions

- Installation and commissioning must be carried out by suitably qualified specialist personnel only.
- Never take measurements on or touch live electrical parts.
- Pay attention to the technical data and storage and operating conditions.

1.3 Designated Use

- The equipment must only be operated within the range of the specified technical data.
- The equipment must only be used under the conditions and for the purposes for which it was designed.
- The safety and operation of the equipment can no longer be guaranteed if it is modified or adapted.

1.4 Incorrect Use

If the equipment is installed incorrectly

- It may not function.
- It may be permanently damaged.
- Danger of injury may exist if the equipment is allowed to fall.

If the equipment is not connected correctly

- It may not function.
- It may be permanently damaged.
- The possibility of an electrical shock may exist.

1.5 Warranty

The Warranty period is 12 months from the date of delivery. The warranty is forfeited if the designated use is violated.

1.6 Brand Names

All brand names referred to are subject without limitation to the valid trademark and ownership rights of the respective owner.

2 Scope of Delivery

- Equipment

WS100-UMB

WS200-UMB

WS300-UMB

WS400-UMB

WS500-UMB

WS600-UMB

WS301-UMB

WS501-UMB

WS401-UMB

WS601-UMB

WS700-UMB
WS800-UMB

WS310-UMB

WS510-UMB

- Connection cable 10m

- Operating manual

3 Order Numbers

WS100-UMB **8367.U03** (Europe, USA, Canada)

- Precipitation Radar **8367.U04** (UK)
- Impulse Output for Raingauge Simulation

WS200-UMB **8371.U01**

- Wind Direction
- Wind Speed
- Compass

WS300-UMB **8372.U01**

- Air Temperature
- Relative Humidity
- Air Pressure

WS301-UMB **8374.U01**
WS302-UMB **8374.U10**
WS303-UMB **8374.U11**
WS304-UMB **8374.U12**
WS310-UMB **8374.U13**

- Air Temperature
- Relative Humidity
- Air Pressure
- Global Radiation

WS400-UMB **8369.U01** (Europe, USA, Canada)

- Precipitation Radar **8369.U02** (UK)
- Air Temperature
- Relative Humidity
- Air Pressure

WS401-UMB **8377.U01**

- Precipitation Rain Gauge
- Air Temperature
- Relative Humidity
- Air Pressure

WS500-UMB **8373.U01**

- Wind Direction
- Wind Speed
- Air Temperature
- Relative Humidity
- Air Pressure
- Compass

WS501-UMB **8375.U01**
WS502-UMB **8375.U10**
WS503-UMB **8375.U11**
WS504-UMB **8375.U12**
WS510-UMB **8375.U13**

- Wind Direction
- Wind Speed
- Air Temperature
- Relative Humidity
- Air Pressure
- Compass
- Global Radiation

WS600-UMB **8370.U01** (Europe, USA, Canada)
8370.U02 (UK)

- Precipitation Radar
- Wind Direction
- Wind Speed
- Air Temperature
- Relative Humidity
- Air Pressure
- Compass

WS601-UMB **8376.U01**

- Precipitation Rain Gauge
- Wind Direction
- Wind Speed
- Air Temperature
- Relative Humidity
- Air Pressure
- Compass

WS700-UMB **8380.U01** (Europe, USA, Canada)

- Precipitation Radar
- Wind Direction
- Wind Speed
- Air Temperature
- Relative Humidity
- Air Pressure
- Compass
- Global Radiation

WS800-UMB **8381.U01** (Europe, USA, Canada)

- Precipitation Radar
- Wind Direction
- Wind Speed
- Air Temperature
- Relative Humidity
- Air Pressure
- Compass
- Global Radiation
- Lightning Sensor

3.1 Accessories

Power supply unit 24V/100VA	8366.USV1
ISOCON-UMB	8160.UISO
Surge protection	8379.USP
External Rain Gauge WTB100	8353.10
External Temperature Sensors	
Temperature Sensor WT1	8160.WT1
Passive Road Surface Temperature Sensor WST1	8160.WST1

3.2 Spare Parts

Connection cable 10m On enquiry

3.3 Additional Documents and Software

You can download the following documents and software via the Internet at www.lufft.com.

Operating Manual	• This document
UMB-Config-Tool	• Windows® software for testing, firmware updates and configuration of UMB devices
UMB Protocol	• Communications protocol for UMB devices
Firmware	• The current device firmware

4 Equipment Description

The WS family is a range of low cost smart combination of weather sensors for the acquisition of a variety of measurement variables, as used for example for environmental data logging in road traffic management systems. Depending on the model, each device has a different combination of sensors for the various measurement variables.

	WS100-UMB	WS200-UMB	WS300-UMB	WS301-UMB**	WS400-UMB	WS401-UMB	WS500-UMB	WS501-UMB***	WS600-UMB	WS601-UMB	WS700-UMB	WS800-UMB
Air temperature			●	●	●	●	●	●	●	●	●	●
Humidity			●	●	●	●	●	●	●	●	●	●
Air pressure			●	●	●	●	●	●	●	●	●	●
Precipitation	●				●	●*			●	●*	●	●
Wind direction		●					●	●	●	●	●	●
Wind speed		●					●	●	●	●	●	●
Compass		●					●	●	●	●	●	●
Global Radiation				●				●			●	●
Lightning Sensor												●
Temperature (ext)		●	●	●	●	●	●	●	●	●	●	●
Rain Gauge (ext)		●	●	●			●	●				
Power Save 2		●	●	●		●	●	●		●		

*) WS401-UMB and WS601-UMB use a rain gauge for precipitation measurement

**) is also valid for WS302-UMB, WS303-UMB, WS304-UMB, WS310-UMB

***) is also valid for WS502-UMB, WS503-UMB, WS504-UMB, WS510-UMB

Sensors marked (ext) in the table are additional accessories and not included with the device. The table shows which external sensors can be connected to the different models.

Note: The external temperature sensor and the external rain gauge use the same input, so only one of them can be connected simultaneously.

Attention: Please note that, due to the approval of the radar sensor used, there are different country options on equipment which includes precipitation measurement by radar technology.

The equipment is connected by way of an 8 pole screw connector and associated connection cable (length 10m).

The measured values are requested over the RS485 interface in accordance with UMB protocol.

During commissioning, configuration and measurement polling takes place using the UMB-Config-Tool (Windows® PC software) or the ConfigTool.NET (for WS100-UMB)

4.1 Air Temperature and Humidity

Temperature is measured by way of a highly accurate NTC-resistor while humidity is measured using a capacitive humidity sensor. In order to keep the effects of external influences (e.g. solar radiation) as low as possible, these sensors are located in a ventilated housing with radiation protection. In contrast to conventional non-ventilated sensors, this allows significantly more accurate measurement during high radiation conditions.

WS100-UMB is not intended for air temperature measurement, so it is not equipped with a radiation shield. Air temperature values with reduced accuracy are available as service channels for additional information.

Additional variables such as dewpoint, absolute humidity and mixing ratio are calculated from air temperature and relative humidity, taking account of air pressure.

4.2 Air Pressure

Absolute air pressure is measured by way of a built-in sensor (MEMS). The relative air pressure referenced to sea level is calculated using the barometric formula with the aid of the local altitude, which is user-configurable on the equipment.

4.3 Precipitation

Tried and tested radar technology from the R2S-UMB sensor is used to measure precipitation. The precipitation sensor works with a 24GHz Doppler radar, which measures the drop speed and calculates precipitation quantity and type by correlating drop size and speed.
WS401-UMB and WS601-UMB are using an unheated rain gauge for precipitation measurement. This version can be recommended for low power application etc.

4.4 Wet Bulb Temperature

The wet bulb temperature is the temperature of a moist or icy surface exposed to air flow.

4.5 Specific Enthalpy

Parameter of state of the humid air, composed of the specific enthalpies (heat capacity) of the components of the mixture and related to the mass fraction of the dry air (at 0°C).

4.6 Air Density

The air density indicates how much mass in a given volume of air is contained and it is calculated from the measured values of air temperature, humidity and air pressure.

4.7 Wind

The wind meter uses 4 ultrasonic sensors which take cyclical measurements in all directions. The resulting wind speed and direction are calculated from the measured run-time sound differential. The sensor delivers a quality output signal indicating how many good readings were taken during the measurement interval.

4.8 Compass

The integrated electronic compass can be used to check the north – south adjustment of the sensor housing for wind direction measurement. It is also used to calculate the compass corrected wind direction.

4.9 Heating

The precipitation sensor and wind meter are heated for operation in winter.

4.10 Global Radiation

The global radiation is measured by a pyranometer mounted in the top cover of the Smart Weather Sensor.

4.11 Lightning Sensor

WS800-UMB includes lightning detection by an integrated sensor analysing the radio wave emission of lightnings. It delivers a count of recognized lightnings.

The sensor analyses spectrum and wave form of the received signal to suppress the detection of man made electrical discharges. Nevertheless false detections can not be totally excluded specially in an environment with high power electrical equipment.

4.12 External Temperature Sensor

Optionally all models may be equipped with an external NTC temperature sensor for the acquisition from additional measurement points. The type of NTC is the same as used for the internal air temperature sensor.

External temperature sensor and external rain gauge can **not** be connected at the same time.

4.13 External Rain Gauge

Models without integrated precipitation acquisition can be equipped with an external rain gauge.

External rain gauge and external temperature sensor can **not** be connected at the same time.

4.14 (WS100-UMB only:) Impulse Output for Rain Gauge Simulation

WS100-UMB provides a digital impulse output for simulation of a rain gauge. Depending on configuration settings the output is pulsed once for each 1.0mm, 0.1mm or **0.01mm** (default) of precipitation.

If the WS100-UMB is configured for impulse output, the serial interface is **not** available for communication in UMB or other serial protocols.

4.15 Sensor Technology (example: WS600-UMB)

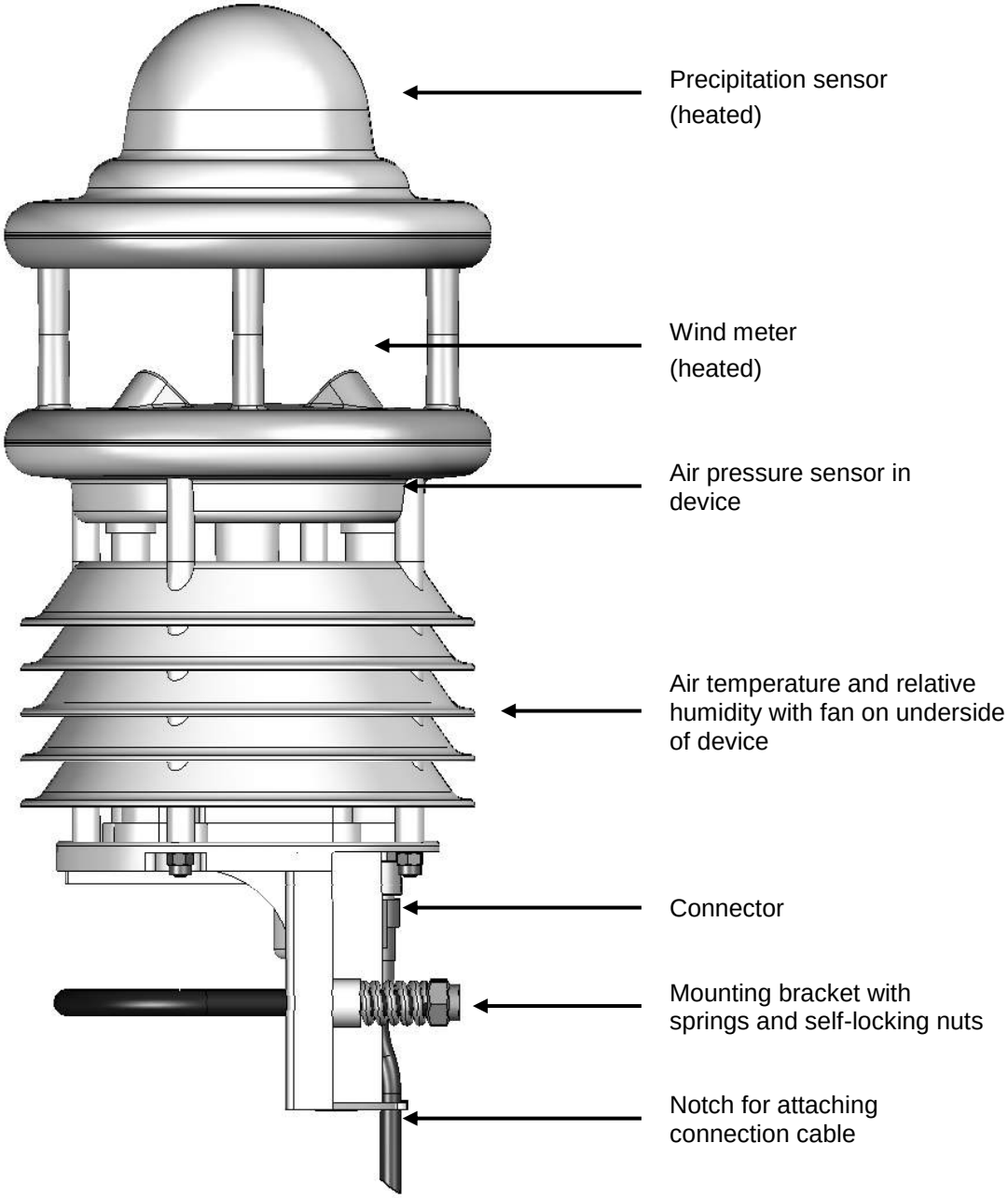

Figure 1: Sensor Technology

5 Generation of Measurements

5.1 Current Measurement (act)

In accordance with the specified sampling rate, the value of the last measurement is transmitted when the current measurement value is requested. Each measurement is stored in a circular buffer for the subsequent calculation of minimum, maximum and average values.

5.2 Minimum and Maximum Values (min and max)

When requesting the minimum and maximum values, the corresponding value is calculated - via the circular buffer at the interval (1 – 10 minutes) specified in the configuration - and transmitted.

Note: In the case of wind direction, the minimum / maximum value indicates the direction at which the minimum / maximum wind speed was measured.

5.3 Average Value (avg)

When requesting the average value, this is calculated - via the circular buffer at the interval (1 – 10 minutes) specified in the configuration - and transmitted. In this way moving averages can also be calculated.

For some values the standard deviation is calculated for the same interval. The calculation of standard deviation will only be activated after the related UMB channel has been requested for the first time.

5.4 Vectorial Average Value (vct)

In the specific case of wind measurement, measurements are calculated vectorially. To this end, the average values of the vectors are generated internally. This calculation is performed with the same configured interval time as that for the minimum, maximum and average values. Hence the value (wind speed) and angle (wind direction) of the vector are calculated.

Note: On delivery, the interval for the calculation of minimum, maximum and average values is set at 10 minutes. If necessary, this can be adjusted to the particular requirements (1 – 10 minutes) with the aid of the UMB-Config-Tool (see page 31).

Note: The evaluation of the standard deviation values is deactivated after power on of the device. The function will be activated with the first request to any of the standard deviation channels.

To get standard deviation values of the first integration period after power on a dummy request to any one of the standard deviation channels should be inserted.

6 Measurement Output

Measurements are transmitted in accordance with UMB binary protocol (Factory Settings).

You can find an example of a measurement request in different protocols and a complete summary of the list of channels in the Appendix.

6.1 Air and Dewpoint Temperature

Sampling rate 1 minute

Generation of average value 1 – 10 minutes

Units °C; °F

Request channels:

UMB Channel					Measuring Range		
act	min	max	avg	Measurement Variable (float32)	min	max	unit
100	120	140	160	Air temperature	-50.0	60.0	°C
105	125	145	165	Air temperature	-58.0	140.0	°F
110	130	150	170	Dewpoint temperature	-50.0	60.0	°C
115	135	155	175	Dewpoint temperature	-58.0	140.0	°F
101				External Temperature Sensor	-40.0	80.0	°C
106				External Temperature Sensor	-40.0	176.0	°F

6.2 Wind Chill Temperature

Sampling rate 1 minute, computed on base of the average temperature and average wind speed

Units °C; °F

Request channels:

UMB Channel					Measuring Range		
act	min	max	avg	Measurement Variable (float32)	min	max	unit
111				Wind chill temperature	-60.0	70.0	°C
116				Wind chill temperature	-76.0	158.0	°F

6.3 Humidity

Sampling rate 1 minute

Generation of average value 1 – 10 minutes

Units %RH; g/m³; g/kg

Request channels:

UMB Channel					Measuring Range		
act	min	max	avg	Measurement Variable (float32)	min	max	unit
200	220	240	260	Relative humidity	0.0	100.0	%
205	225	245	265	Absolute humidity	0.0	1000.0	g/m³
210	230	250	270	Mixing ratio	0.0	1000.0	g/kg

6.4 Air Pressure

Sampling rate 1 minute

Generation of average value 1 – 10 minutes

Unit hPa

Request channels:

UMB Channel					Measuring Range		
act	min	max	avg	Measurement Variable (float32)	min	max	unit
300	320	340	360	Absolute air pressure	300	1200	hPa
305	325	345	365	Relative air pressure	300	1200	hPa

Note: For the correct calculation of relative air pressure, the altitude of the sensor must be entered in the device configuration (see Figure 11 on page 34). The factory setting for altitude is 0m; in this way both measurement variables deliver the same values.

6.5 Wet Bulb Temperature

Sampling rate 1 minute

Units °C; °F

Request channels:

UMB Channel					Measuring Range		
act				**Measurement Variable (float32)**	**min**	**max**	**unit**
114				Wet Bulb Temperature	-50.0	60.0	°C
119				Wet Bulb Temperature	-58.0	140.0	°F

6.6 Specific Enthalpy

Sampling rate 1 minute

Unit kJ/kg

Request channels:

UMB Channel					Measuring Range		
act				**Measurement Variable (float32)**	**min**	**max**	**unit**
215				Specific Enthalpy	-100.0	1000.0	kJ/kg

6.7 Air Density

Sampling rate 1 minute

Unit kg/m³

Request channels:

UMB Channel					Measuring Range		
act				**Measurement Variable (float32)**	**min**	**max**	**unit**
310				Air Density	0.0	3.0	kg/m³

6.8 Wind Speed

Sampling rate	1 sec / 10 sec (internal sampling frequency 15Hz)
Generation of average value	1 – 10 minutes
Generation of maximum value	1 – 10 minutes based on the internal second measurements
Units	m/s; km/h; mph; kts
Response threshold	0.3 m/s

Request channels:

UMB Channel						Measuring Range		
act	**min**	**max**	**avg**	**vct**	**Measurement Variable (float32)**	**min**	**max**	**unit**
400	420	440	460	480	Wind Speed	0	75.0	m/s
405	425	445	465	485	Wind Speed	0	270.0	km/h
410	430	450	470	490	Wind Speed	0	167.8	mph
415	435	455	475	495	Wind Speed	0	145.8	kts
401					Wind Speed Fast	0	75.0	m/s
406					Wind Speed Fast	0	270.0	km/h
411					Wind Speed Fast	0	167.8	mph
416					Wind Speed Fast	0	145.8	kts
403					Wind Speed Standard Deviation *	0	75.0	m/s
413					Wind Speed Standard Deviation *	0	167.8	mph

Note: The second measurements are averaged over 10 seconds for the output of the current (act) measurement. The 'fast' channels deliver every second a value.

6.9 Wind Direction

Sampling rate	1 sec / 10 sec (internal sampling frequency 15Hz)
Generation of average value	1 – 10 minutes
Generation of maximum value	1 – 10 minutes based on the internal second measurements
Unit	°
Response threshold	0.3 m/s

Request channels:

UMB Channel						Measuring Range		
act	**min**	**max**	**avg**	**vct**	**Measurement Variable (float32)**	**min**	**max**	**unit**
500	520	540		580	Wind Direction	0	359.9	°
501					Wind Direction Fast	0	359.9	°
502					Wind Direction Corrected	0	359.9	°
503					Wind Dir. Standard Deviation *	0	359.0	°

Note: The second measurements are averaged over 10 seconds for the output of the current (act) measurement. The 'fast' channels deliver every second a value.

The minimum / maximum wind direction indicates the direction at which the minimum / maximum wind speed was measured.

The corrected wind direction is calculated from the wind direction measured by the wind sensor and the heading measured by the compass.

Optionally the compass correction of the wind direction can be activated for all wind direction values. (Settings by UMB Config Tool)

Note: The correction function is designed for correction of the wind direction of a statically mounted sensor. If the alignment of the sensor changes during the measurement (i.e. if the sensor is mounted on a rotating platform or similar) the correction function will not in all cases work properly, especially not for the vector average.

It is of course possible to use the correction function for mobile measurement units, where the alignment is changed between measurement periods.

***) Note:** The evaluation of the standard deviation values will be activated after the first request of a standard deviation channel. Please see p. 11.

6.10 Wind Measurement Quality

Sampling rate 10 seconds

Unit %

Request channels:

UMB Channel						Measuring Range		
act	min	max	avg	vct	Measurement Variable (float32)	min	max	unit
805					Wind Value Quality	0	100	%
806					Wind Value Quality (fast)	0	100	%

Note: The value is updated every 10 seconds and transmits the minimum wind measurement quality for the last 10 seconds interval.

The “fast” value indicates the measurement quality of the one second measurement value.

This value allows the user to assess how well the measurement system is functioning in the respective ambient conditions. In normal circumstances the value is 90 - 100%. Values up to 50% do not represent a general problem. If the value falls towards zero the measuring system is reaching its limits.

If during critical ambient conditions the system is no longer able to conduct reliable measurements, error value 55h (85d) is transmitted (device unable to execute valid measurement due to ambient conditions).

6.11 Compass

(only device version 030 or higher)

Sampling rate: 5 min

Unit °

Request channels:

UMB Channel						Measuring Range		
act	min	max	avg	vct	Measurement Variable (float)	min	max	unit
510					Compass Heading	0	359	°

Note: Reliable operation of the compass is only possible, if the sensor has been mounted according to the instructions in this manual, i.e. on top of the pole. Should the sensor be mounted on a traverse, the distribution of iron masses will be different from the situation during factory calibration. This may lead to additional deviation of the bearing. This also applies to lightning rods mounted at the pole top!

Dependent on the location of the installation the local declination of the earth magnetic field has to be considered. The declination value is entered using the UMB-Config-Tool (see page 34). The declination for the installation location can be found in the Internet, e.g. at

http://www-app3.gfz-potsdam.de/Declinationcalc/declinationcalc.html

http://www.ngdc.noaa.gov/geomagmodels/Declination.jsp

Note: When the fan is not rotating the compass measurement value will be influenced by the magnetic field of the fan. Normally the compass measurement will be performed with the fan rotating to compensate this influence. If, starting from device version 037, the fan will not be switched on in case of low operating voltage (less than 12V) deviations of the compass measurement value must be accepted.

Note: When the device is operated in Power Saving Mode 1 or 2 the compass measurement is performed only once after power on. Later changes of the orientation of the device will not be recognized.

6.12 Precipitation Quantity - Absolute

Sampling rate Event-dependent on reaching the response threshold
Response threshold 0.01mm (Radar)
Response threshold 0.2 / 0.5 mm (Rain Gauge)
Units l/m²; mm; in; mil
Request channels:

UMB Channel	Measurement Variable (float32)	Unit
600	Precipitation Quantity - Absolute	l/m²
620	Precipitation Quantity - Absolute	mm
640	Precipitation Quantity - Absolute	in
660	Precipitation Quantity - Absolute	mil

Note: This measurement indicates the accumulated precipitation quantity since the last device reboot. The measurement is retained for the duration of a short power failure. To reset this value, use the corresponding function in the UMB-Config-Tool (see page 37) or disconnect the device from the power supply for at least one hour.

6.13 Precipitation Quantity - Differential

Sampling rate Event-dependent on reaching the response threshold
Response threshold 0.01mm (Radar)
Response threshold 0.2 / 0.5 mm (Rain Gauge)
Units l/m²; mm; in; mil
Request channels:

UMB Chanel	Measurement Variable (float32)	Unit
605	Precipitation Quantity - Differential	l/m²
625	Precipitation Quantity - Differential	mm
645	Precipitation Quantity - Differential	in
665	Precipitation Quantity - Differential	mil

Note: Each request from a differential channel sets the accumulated quantity back to zero. If the response from the device is lost due to a transmission error (e.g. poor GPRS connection), the quantity accumulated to date is also lost. The quantity accumulated to date is also reset each time the equipment is rebooted.

6.14 Precipitation Intensity

Sampling rate 1 minute
Response threshold 0.1 mm/h
Units l/m²/h; mm/h; in/h; mil/h
Request channels:

UMB Channel	Measurement Variable (float32)	Range	Unit
800	Precipitation Intensity	0 … 200.0	l/m²/h
820	Precipitation Intensity	0 … 200.0	mm/h
840	Precipitation Intensity	0 … 7.874	in/h
860	Precipitation Intensity	0 … 7874	mil/h

Note: The device versions with radar technology (WS100-UMB, WS400-UMB, WS600-UMB, WS700-UMB, WS800-UMB) calculate the precipitation intensity from the accumulated precipitation differences of the last 6 minutes before the measurement data request.

The lower resolution of the rain gauge would lead to high fluctuation of the intensity values, so the rain gauge versions (WS401-UMB and WS601-UMB), as well as the external rain gauge, use the accumulated precipitation of the last 60 minutes prior to the current measurement for intensity calculation.

6.15 Precipitation Type

Sampling rate Event-dependent on reaching the response threshold
Response threshold 0.002mm (Radar)
Response threshold 0.2 / 0.5 mm (Rain Gauge)
Follow-up time 2 minutes
Request channels:

UMB Channel	Measurement Variable (uint8)	Coding
700	Precipitation Type	0 = No precipitation 60 = Liquid precipitation, e.g. rain 70 = Solid precipitation, e.g. snow 40 = unspecified precipitation (WS401-UMB, WS601-UMB, external rain gauge) **WS100-UMB only:** 67 = freezing rain 69 = sleet 90 = hail

Note: A detected precipitation type remains valid for 2 minutes after the end of the precipitation event. In order to record precipitation types which only occur for a short period (e.g. short-term rain), the request interval should be 1 minute or shorter.

Ice, hail and sleet are transmitted as rain (60) by devices other than WS100-UMB.

The versions WS401-UMB and WS601-UMB as well as the external rain gauge do not include detection of precipitation type, so in this case only type 40 (unspecified precipitation) is indicated. Due to the function of the rain gauge only liquid or molten precipitation can be recognized.

6.16 Heating Temperature

Sampling Rate 1 Minute
Units °C; °F
Request Channels:

UMB Channel					Measuring Range		
act	min	max	avg	Measurement Variable (float32)	min	max	Unit
112				Heating Temperature Wind Sensor	-50.0	150.0	°C
113				Heating Temperature Precipitation Sensor	-50.0	150.0	°C
117				Heating Temperature Wind Sensor	-58.0	302.0	°F
118				Heating Temperature Precipitation Sensor	-58.0	302.0	°F

6.17 Global Radiation

Sampling Rate 10 seconds
Generation of average values 1 – 10 minutes *)
Unit W/m²
Request Channels:

UMB Channel					Measuring Range		
act	min	max	avg	Measurement Variable (float32)	min	max	unit
900	920	940	960	Global Radiation	0.0	2000.0 *)	W/m²

*) Until device version .49 / .212 / Firmware v5.6: 1400.0 W/m^2

*) Note: The average, maximum and minimum values are evaluated from the 1 minute averages of the 10 second spot value.

When operated in Power Saving Mode 1 (see page 40) the WS700-UMB will measure the global radiation only once per minute.

6.18 Lightning Sensor

6.18.1 Lightning Events

Sampling Rate 1 minute
Sum 1 – 30 minutes
Unit Events
Request Channels:

UMB Channel					Measuring Range		
act	sum			Measurement Variable (uint16)	min	max	unit
617				Lightning Events	0	255	-
	677			Lightning Events (Interval)	0	7650	-

6.19 Service Messages

Service channels are available for the surveillance of the operation of the Smart Weather Sensor.

Request Channels:

UMB Channel					Measuring Range		
act	min	max	avg	Measurement Variable (float32)	min	max	unit
10000				Supply Voltage V	0.0	50.0	V
11000				Rain Drop Volume µ	0.0	500.0	µl

WS100-UMB only: Air temperature (without radiation shield)

Sampling rate 1 minute
Generation of average value 1 – 10 minutes
Units °C; °F
Request channels:

UMB Channel					Measuring Range		
act	min	max	avg	Measurement Variable (float32)	min	max	unit
4100	4120	4140	4160	Air temperature	-50.0	60.0	°C
4105	4125	4145	4165	Air temperature	-58.0	140.0	°F

6.20 Drop Diameter Distribution (WS100 only)

Drop diameters of precipitation detected by the radar sensor are shown as distribution of drop diameter classes. Diameters are calculated as volume equivalent ball diameter.

Sampling Rate Event dependent

Unit Number of events

Abfragekanäle:

UMB Channel	Measurement Variable (uint32)	Unit
4600	Total precipitation particles	Events
4601	Total drops	Events
UMB Channel	**Measurement Variable (uint16)**	**Unit**
4602	Drizzle particles	Events
4603	Snow particles	Events
4604	Hail particles	Events
4620	Cl. 0: Drops < 0.5mm equiv. diameter	Events
4621	Cl 1: Drops 0.5 .. 1.0mm equiv. diameter	Events
4622	Cl 2: Drops 1.0 .. 1.5mm equiv. diameter	Events
4623	Cl 3: Drops 1.5 .. 2.0mm equiv. diameter	Events
4624	Cl 4: Drops 2.0 .. 2.5mm equiv. diameter	Events
4625	Cl 5: Drops 2.5 .. 3.0mm equiv. diameter	Events
4626	Cl 6: Drops 3.0 .. 3.5mm equiv. diameter	Events
4627	Cl 7: Drops 3.5 .. 4.0mm equiv. diameter	Events
4628	Cl 8: Drops 4.0 .. 4.5mm equiv. diameter	Events
4629	Cl 9: Drops 4.5 .. 5.0mm equiv. diameter	Events
4630	Cl 10: Drops 5.0 .. 5.5mm equiv. diameter	Events
4631	Cl 11: Drops > 5.5mm equiv. diameter	Events

Note: Similar to the request of differential precipitation quantity the accumulated sum of events of each channel will be reset to 0 after transmission!

For consistent results all related channels should be requested in one run.

If the response from the device is lost due to a transmission error (e.g. poor GPRS connection), the quantity accumulated to date is also lost. The quantity accumulated to date is also reset each time the equipment is rebooted.

7 Installation

The sensor bracket is designed to be installed on the top of a mast with a diameter of 60 – 76mm.

The following tools are required for the installation:

- Open-end or ring spanner (SW13)
- Compass for aligning the wind meter to the North

7.1 Fastening

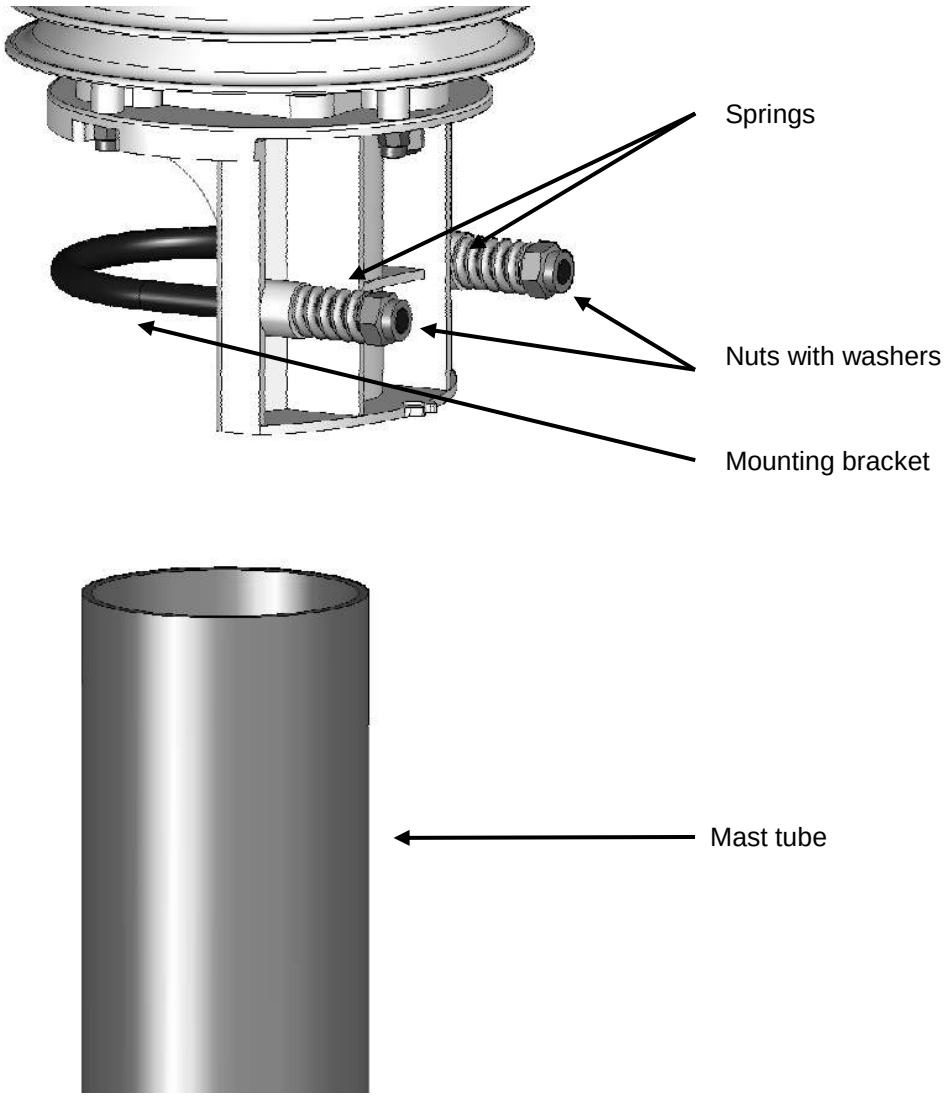

Figure 2: Fastening to the Mast

- Loosen nuts
- Push the sensor onto the top of the mast from above
- Tighten the nuts evenly until contact is made with the springs but the sensor can still be moved easily
- Align the sensor to the North (for wind meters)
- Tighten both nuts with **3 revolutions**

7.2 North Alignment

In order for the wind direction to display correctly, the sensor must be aligned to the North. The sensor has a number of directional arrows for this purpose.

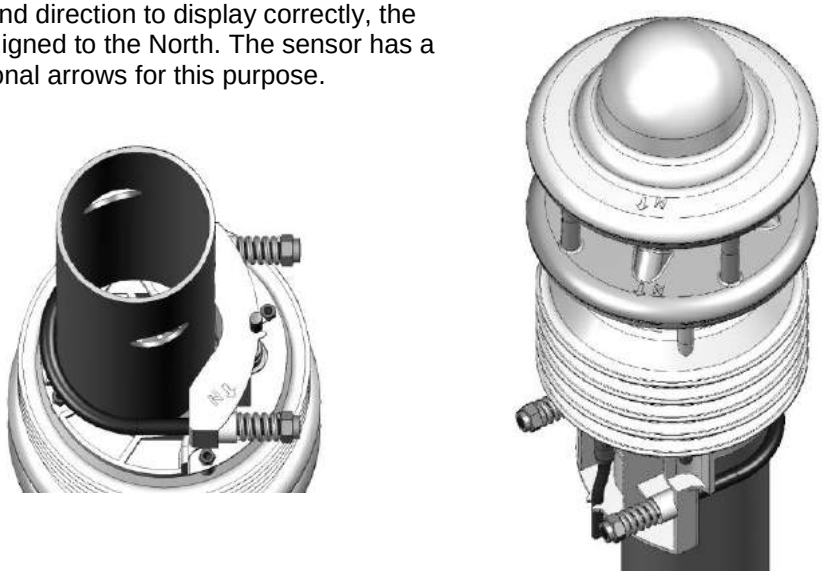

Figure 3: North Markings

Procedure:

- If the sensor is already installed, first loosen both nuts evenly until you can turn the sensor easily
- Using the compass, identify the North and fix a point of reference on the horizon
- Position the sensor in such a way that the South and North wind sensors are in alignment with the fixed point of reference in the North
- Tighten both nuts with 3 revolutions

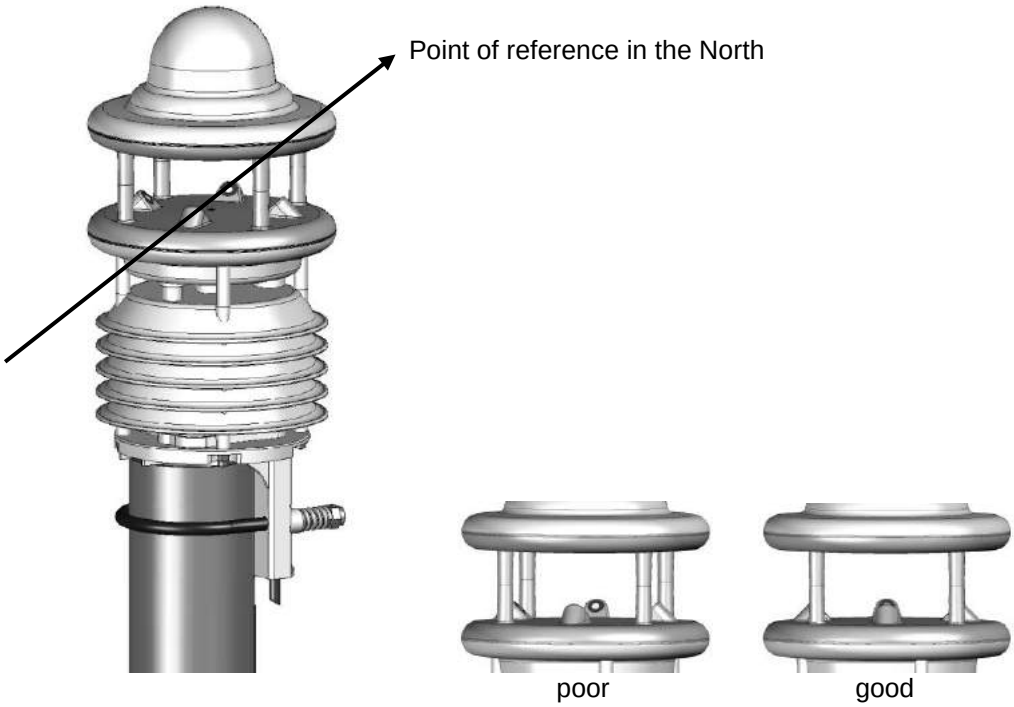

Figure 4: Alignment to North

Note: As the magnetic North Pole indicated by the compass differs from the Geographic North Pole, account must be taken of the declination (variation) at the location when aligning the sensor.

Depending on the location, the variation can be more than 15° (in North America for example). In Central Europe the variation can be largely ignored at present (< 3°). You can find further helpful information on this subject on the Internet.

7.3 Selecting the Installation Location

In order to guarantee long service life and correct equipment operation, please pay attention to the following points when selecting the installation location.

7.3.1 General Instructions

- Stable subsurface for installing the mast
- Free access to the equipment for maintenance works
- Reliable power supply for permanent operation
- Good network coverage when transmitting over a mobile communications network

Note: The computed measurements specifically apply to the equipment location only. No conclusions can be drawn with regard to the wider environment or a complete road section.

ATTENTION:

- Only approved and tested appliances (conductors, risers etc.) should be used to install the device on the mast.
- All relevant regulations for working at this height must be observed.
- The mast must be sized and anchored appropriately.
- The mast must be earthed in accordance with regulations.
- The corresponding safety regulations for working at road side and in the vicinity of the road carriageway must be observed.

If the equipment is installed incorrectly

- It may not function.
- It may be permanently damaged.
- Danger of injury may exist if the equipment is allowed to fall.

7.3.2 Sensors with Wind Measurement / Compass

- Installation at the top of the mast
- Installation height at least 2m above the ground
- Free field around the sensor

Note: Buildings, bridges, embankments and trees may corrupt the wind measurement. Equally, passing traffic may cause gusts which may influence the wind measurement.

Note: for accurate compass readings, an aluminium mast is recommended.

7.3.3 Sensors with Radar Precipitation Measurement

- Installation on the top of the mast
- Installation height at least 4.5m above the ground
- Distance to road carriageway at least 10m
- Distance from moving objects (e.g. trees, bushes and even bridges) at least 10m at the height of the sensor

Note: Falling or moving objects, e.g. falling leaves or leaves blowing in the wind, may cause false measurements and/or precipitation types.

Note: Strong wind can influence the accuracy of the precipitation measurement.

Note: When selecting the installation location please take care to position the device at a suitable distance from other systems incorporating a 24GHz radar sensor, such as traffic counting devices on overhead gantry signs. Otherwise cross effects and system malfunctions may occur. In the final analysis, the distance to other measuring systems also depends on their range of coverage and signal strength.

7.3.4 Sensors with Rain Gauge

- Installation on the top of the mast or on crossbar with distance to the mast
- Mast or crossbar mounting shall be exactly perpendicular, otherwise the precision of the rain gauge may be influenced.

Note: The location should be selected so that pollution of the rain gauge funnel by falling leaves etc. can be avoided as far as possible.

7.3.5 Sensors with Global Radiation Measurement

- Installation on top of the pole
- Shadow free location, if possible 360° free view to the horizon at the height of the pyranometer
- Distance to shadow casting objects (trees, buildings) at least 10 times of the object height relative to the sensor.

7.3.6 Installation Sketch

Example WS600-UMB:

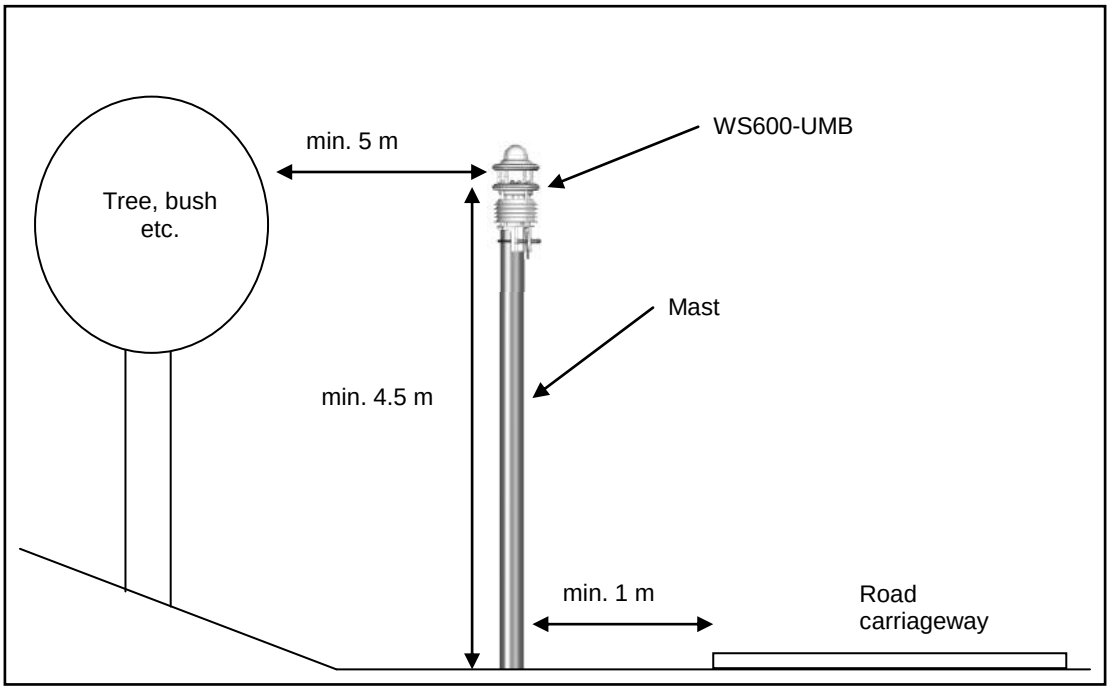

Figure 5: Installation Sketch

8 Connections

There is an 8 pole screw connector on the underside of the equipment. This serves to connect the supply voltage and interfaces by way of the supplied connection cable.

Equipment connector:

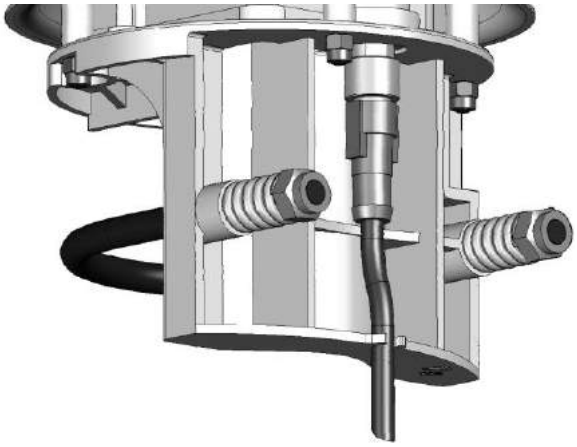

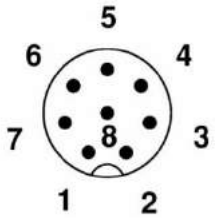

View on sensor connection

Figure 6: Connections

Pin assignment:

1	White	Supply voltage ground and (SDI12_GND for device version > 41)
2	Brown	Positive supply voltage (through 2.5A fuse where required)*
3	Green	RS485_A (+) or (SDI-12 GND for device version < 42)
4	Yellow	RS485_B (-) or SDI-12 Data Line
5	Grey	External Sensor a (**WS100-UMB only: impulse output Uout**)
6	Pink	External Sensor b (**WS100-UMB only: not connected**)
7	Blue	Heating voltage ground
8	Red	Positive heating voltage (through 2.5A fuse where required)*

The cable marking is in accordance with DIN 47100.

***) WS100/400/600/700/800-UMB: Supply voltage and heating voltage shall be protected by a fuses 2.5A (fast) each.**

The cable shielding shall be connected to earth in the electrical cabinet.

Note: The yellow protective cap must be removed before plugging in the equipment.

If the equipment is not connected correctly

- It may not function
- It may be permanently damaged
- The possibility of an electrical shock may exist

The supply voltage and the heating voltage are protected against polarity reversal.

Note: When operating the Smart Weather Sensor in SDI12 mode, line 3 (green) shall be connected only if the SDI12 logger is DC-isolated from the supply voltage of the device. If signal ground (SDI-12-GND) of the data logger and power supply ground are identical, only the SDI12-Data-Line (line 4, yellow) may be connected.

Note for SDI12 operation of devices starting from device version 42 or 51 (WS700): If data logger and device supply voltage are DC-isolated the signal ground (SDI12_GND) must be connected to line 1 (white). Line 3 (green) shall not be connected. (**see SDI12 connection drawings in chapter 19.6**)

8.1 Supply Voltage

The supply voltage for the Smart Weather Sensor is 12 - 24V DC. The power supply unit used must be approved for operation with equipment of protection class III (SELV).

Starting with device version 037 the Smart Weather Sensor has an extended supply voltage range of 4 … 32V DC. Operation with a supply voltage of 24V is recommended. Limitations apply in case of supply voltages lower than 12V (see below).

8.1.1 Limitations in 12V mode

If the heating is operated on 12V DC, account must be taken of the functional restrictions in winter operation.

Note: A heating voltage of 24V DC is recommended to guarantee full heating duty.

8.1.2 Limitations in Case of Operation with Supply Voltage Below 12V

When operating a Smart Weather Sensor (device version >= 037) with supply voltages lower than 12V DC, the fan will be not switched on, independent of the fan operating mode. This may influence the accuracy of temperature and humidity measurement in case of solar radiation.

Additionally deviations of the compass measurement values have to be accepted.

When operating the Smart Weather Sensor in Power Save Modes with supply voltages below 12V the minimal supply voltage depends on the length of the connection cable.

The minimal permitted supply voltage (U_{Bmin})can be approximately evaluated from the equation:

U_{Bmin} = 4V + 0.3V (cable length / m)

The minimal supply voltage for a 10m cable is then U_{Bmin} = 6V. The influence of the cable length on minimal supply voltage can be reduced by using of a cable with larger wire cross section.

8.2 RS485 Interface

The equipment has an electrically isolated, half-duplex, 2 wire RS485 interface for configuration, measurement polling and the firmware update.

See page 46 for technical details.

8.3 Connection to ISOCON-UMB (8160.UISO)

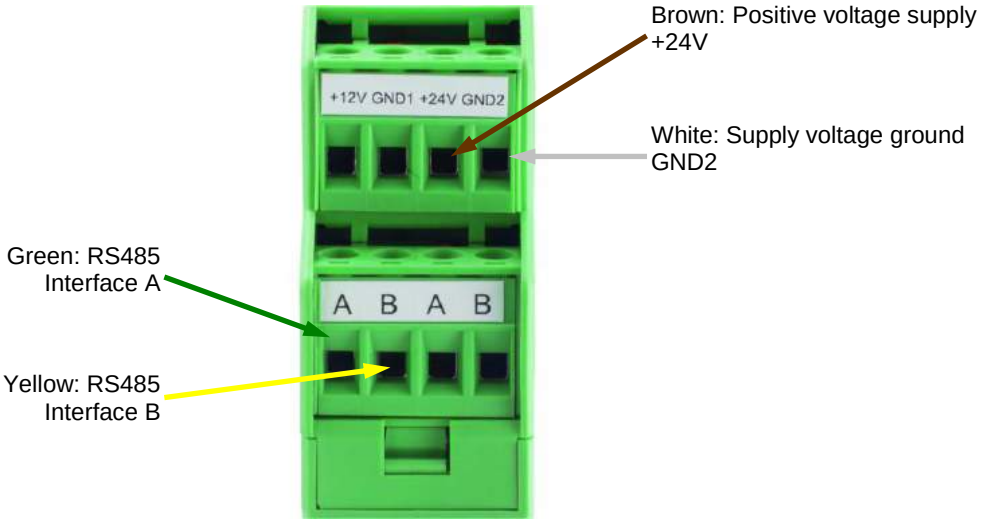

Figure 7: Connection to ISOCON-UMB

Warning: The heating voltage (red = positive heating voltage; blue = heating voltage ground) is **not** connected to the ISOCON-UMB but wired direct to the power supply unit.

During installation please also refer to the operating manual for the ISOCON-UMB.

8.4 Use of Surge Protection (8379.USP)

When using surge protection (Order No.: 8379.USP), please pay attention to the connection example in the surge protection operating instructions.

8.5 Connection of External Temperature and Precipitation Sensors

External sensors are to be connected to pins 5 and 6 of the plug connector, i.e. to the gray and pink wires of the cable delivered with the Smart Weather Sensor.

The temperature sensors as well as the external rain gauge are unipolar, so any connection sequence can be chosen.

The type of external sensor has to be set using the UMB Config Tool.

For details please refer to Chapter18.

8.6 (WS100-UMB only:) Connection of Impulse Output for Rain Gauge Simulation

The digital impulse output is available between pin 7 (gray wire) Uout and pin 1 (white) GND. In idle state the voltage level at Uout is approximately equal to the supply voltage. Each time the configured amount of precipitation is reached, Uout is pulsed for about 50ms to GND level.

Activation of the rain gauge simulation mode and selection of the resolution have to be set by ConfigTool.NET.

For details please refer to Chapter 10.2.

9 Commissioning

After the equipment has been installed and connected correctly, the sensor begins autonomously to take measurements. A Windows® PC with serial interface, UMB-Config-Tool software and interface cable (SUB-D 9 pole; jack - socket; 1:1) are required for configuration and test purposes.

Attention must be paid to the following points:

Check for correct equipment operation on site by carrying out a measurement request with the aid of the UMB-Config-Tool (see page 39).

- Configure the local altitude in order to ensure the correct calculation of relative air pressure (see page 34).
- The device must be aligned to the North in order to ensure correct wind measurement (see page 24), or the automatic compass correction must be activated (see page 34).
- In order to get correct compass headings the local declination must be configured (see page 18and 34).
- If several Smart Weather Sensors are operated on a UMB network, a unique device ID must be assigned to each device (see page 33).

There is no protective cover to remove on the sensor itself.

10 Configuration and Test

Lufft provides Windows® PC software (UMB-Config-Tool) for configuration purposes. The sensor can also be tested and the firmware updated with the aid of this software.

Note: UMB-Config-Tool is not suitable for configuration settings of the WS100-UMB. ConfigTool.NET shall be used for configuration settings of the WS100-UMB. Please refer to the ConfigTool.NET manual.

Attempts to modify the settings of the WS100-UMB by UMB-Config-Tool may render the device inoperative.

The function test of the WS100-UMB (channel selection and measurement polling) can optionally be done using UMB-Config-Tool.

With regard to contents the following description applies also to WS100-UMB, as far as the specific instrumentation of this type is concerned.

10.1 Factory Settings

The Smart Weather Sensor is delivered with the following settings:

Class ID:	7 (cannot be modified)
Device ID:	1 (gives address 7001h = 28673d)
Baud rate:	19200
RS485 protocol:	Binary
Calculation interval:	10 measurements
Local altitude:	0 m

Note: The device ID must be changed if several Smart Weather Sensors are operated on a UMB network, as each device requires a unique ID. It makes sense to start from ID 1 and continue in ascending order.

10.2 Configuration with the UMB-Config-Tool

The operation of the UMB-Config-Tool is described in detail in the operating instructions for the Windows® PC software. For this reason only the menus and functions specific to the Smart Weather Sensor are described here.

10.2.1 Sensor Selection

The Smart Weather Sensor is shown here with sensor selection WSx-UMB (Class ID 7).

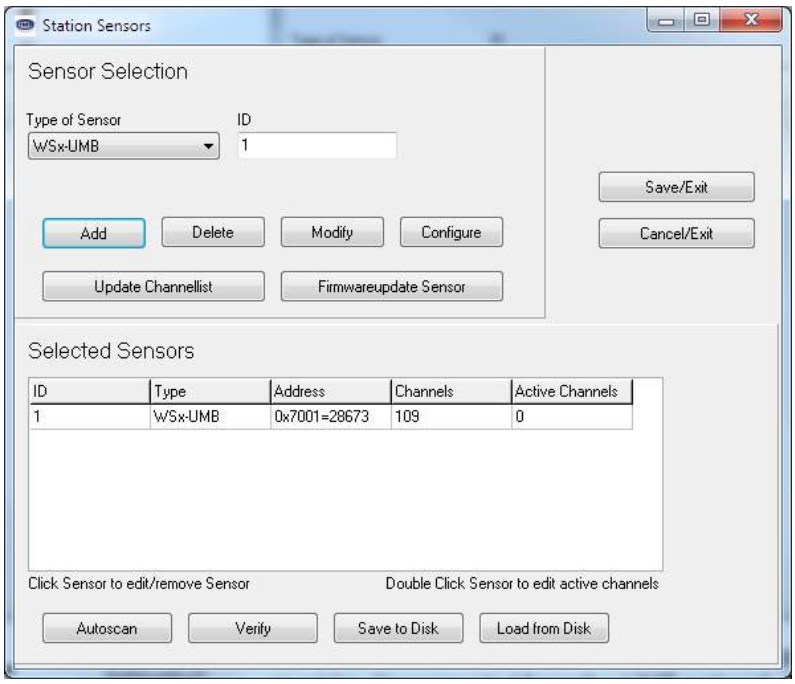

Figure 8: Sensor Selection

Note: You do require the current version of the UMB-Config-Tool to configure the Smart Weather Sensor.

Note: All other devices which are used in the polling process, e.g. modems, LCOM etc., must be disconnected from the UMB network during configuration.

10.2.2 Configuration

After a configuration has been loaded, all relevant settings and values can be adjusted. Depending on the device type, only the settings pertinent to the respective available sensors are relevant.

10.2.3 General Settings

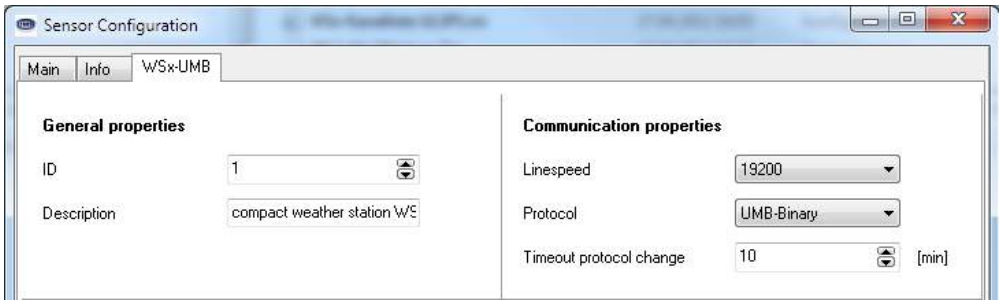

Figure 9: General Settings

ID: Device ID (factory setting 1; assign device IDs to additional devices in ascending order).

Description: In order to differentiate the devices you can enter a description here, e.g. the location.

Linespeed: Transmission speed of the RS485 interface (factory setting 19200; **DO NOT CHANGE for operation with ISOCON-UMB**).

Protocol: Communications protocol of the sensor (UMB-Binary, UMB-ASCII, SDI-12, Modbus-RTU, Modbus-ASCII, Terminal-Mode, XDR).

Timeout: In the event of a temporary changeover of the communications protocol, the system switches back to the configured protocol after this time (in minutes)

Important note: If the baud rate is changed, after saving the configuration on the sensor, the sensor communicates at the new baud rate. When operating the sensor in a UMB network with ISOCON-UMB, **this baud rate must not be changed**; otherwise the sensor **is no longer addressable** and can no longer be configured.

10.2.4 Temperature, Humidity and Fan Settings

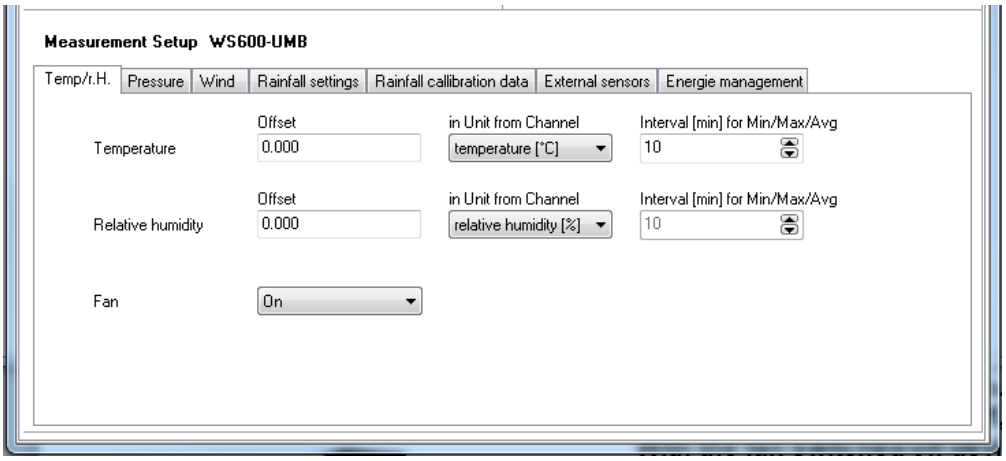

Figure 10: Temperature, Humidity and Fan Settings

Offset: Absolute offset on the measurement in the unit of the accompanying channel (for on-site calibration).

Interval: Time in minutes for the minimum, maximum and average value calculation interval.

Fan: to reduce electrical power consumption, the fan can be switched off.
Note: if the fan is switched off, all heaters will also be switched off! With the fan switched off deviations in temperature and humidity measurement can occur by solar radiation!

Note: In order to calculate dew point, absolute humidity and mixing ratio, the temperature and humidity measurement always requires the same interval. For this reason different intervals cannot be set.

10.2.5 Pressure,

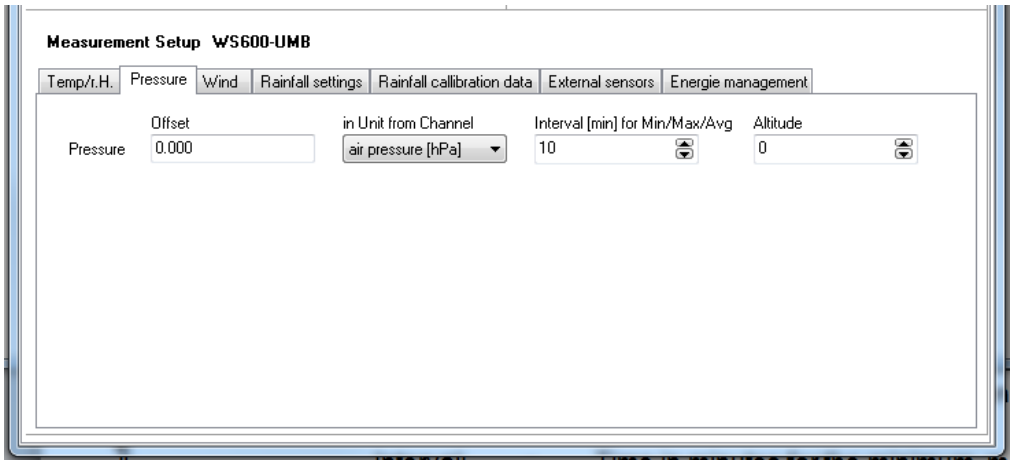

Figure 11: Pressure Settings

Offset: Absolute offset on the measurement in the unit of the accompanying channel.

Interval: Time in minutes for the minimum, maximum and average value calculation interval.

Altitude: Enter the local altitude in meters here for the correct calculation of relative air pressure (referenced to sea level).

10.2.6 Wind and Compass Settings

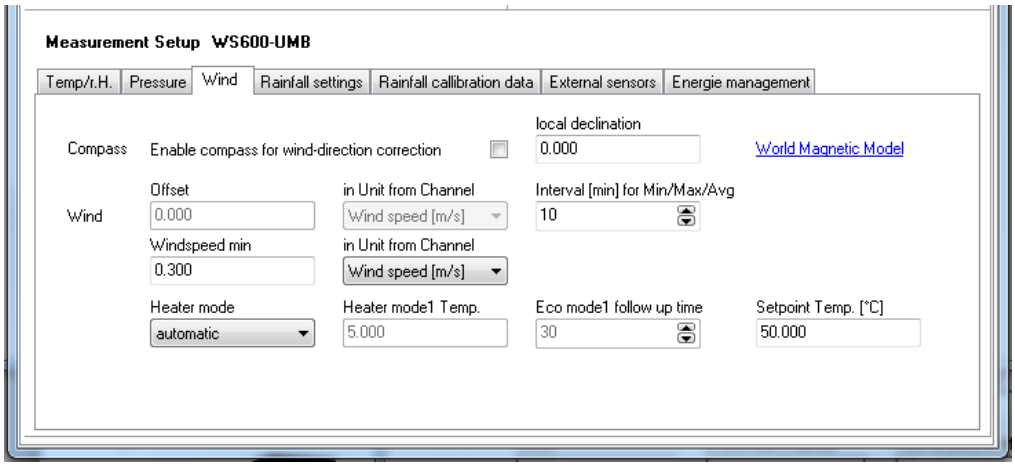

Figure 12: Wind Settings

Offset: Absolute offset on the measurement in the unit of the accompanying channel.

Interval: Time in minutes for the minimum, maximum and average value calculation interval.

Windspeed min: Approach velocity onto the wind meter with effect from which a measurement is transmitted, in the unit of the accompanying channel.

Heater mode: The device can be configured for heating in different operating modes. Configure as ‘automatic’ in normal operating mode. You can find a precise description of the operating modes on page 42.

Local declination: Dependent on the location of the installation; the local declination of the earth magnetic field has to be considered.

Enable Compass for wind-direction correction:
With activated compass correction all wind direction values will be corrected according to the alignment of the sensor, as evaluated by the compass.

Note: The offset is not used for the wind meter at present because on-site calibration is not possible in this case.

10.2.7 Precipitation Sensor Settings (Radar)

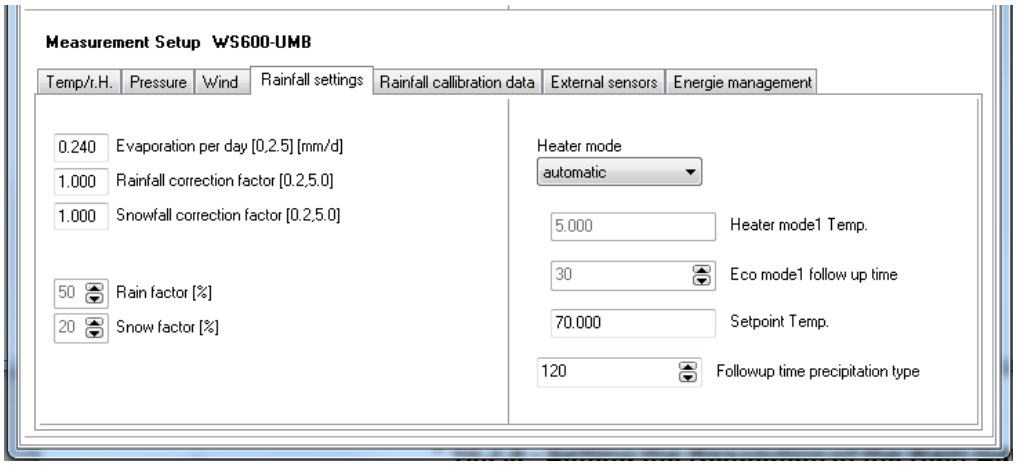

Figure 13: Precipitation Sensor Settings (Radar)

Heater mode: The device can be configured for heating in different operating modes. Configure as 'automatic' in normal operating mode. You can find a precise description of the operating modes on page 42.

Followup time precipitation type: for this time (in seconds) the detected precipitation type is shown; to cover all events, this time must be adjusted to the poll rate.

Note: All other parameters, especially those in the 'Rainfall calibration data' tab, may only be changed after consultation with the manufacturer, as they have a major influence on the functioning and accuracy of the sensor.

10.2.8 Precipitation Sensor Settings (Rain Gauge)

The rain gauge module can be operated with resolutions 0.2mm or 0.5mm. The setting of the resolution is to be done in two steps:

- Mechanical setting
- Configuration setting

The mechanical setting works by modifying the effective area of the funnel. The sensor is delivered with a reduction ring, which can be mounted on the funnel to reduce the area.

Funnel with reduction ring	resolution 0.5mm
Funnel without reduction ring	resolution 0.2mm

Then the resolution is set in the sensor configuration using the UMB Config Tool.

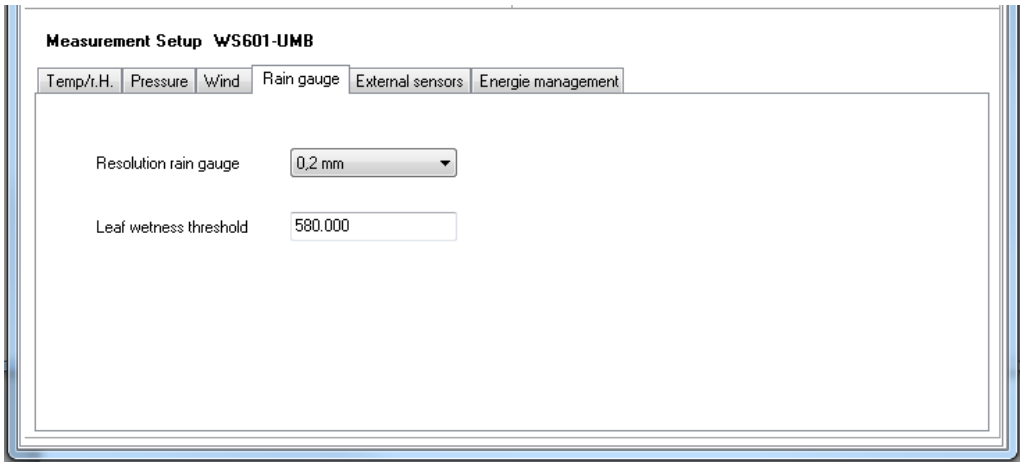

Figure 14: Precipitation Sensor Settings (Rain Gauge)

Caution: If mechanical setting and configuration setting do not conform, the sensor will deliver wrong precipitation values!

10.2.9 Global Radiation Settings

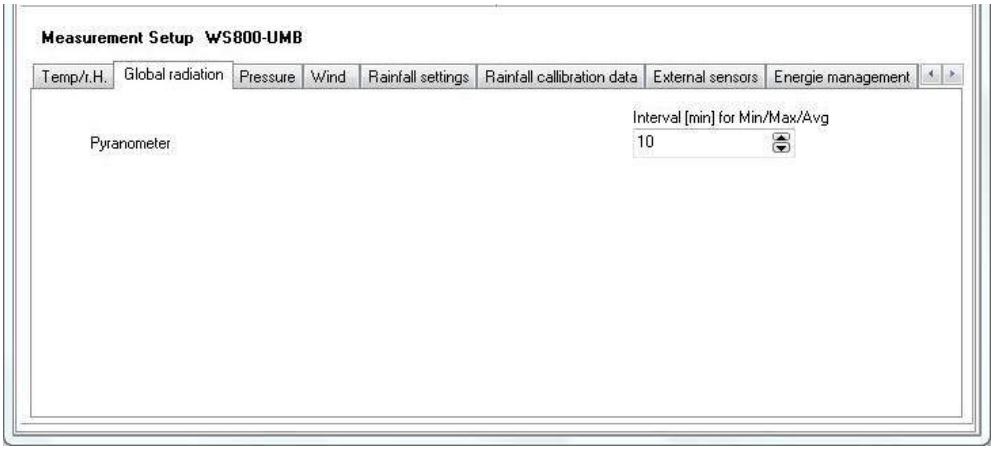

Figure 15: Global Radiation Settings

Interval: Time in minutes for minimum, maximum and average value calculation

10.2.10 Lightning Sensor Settings

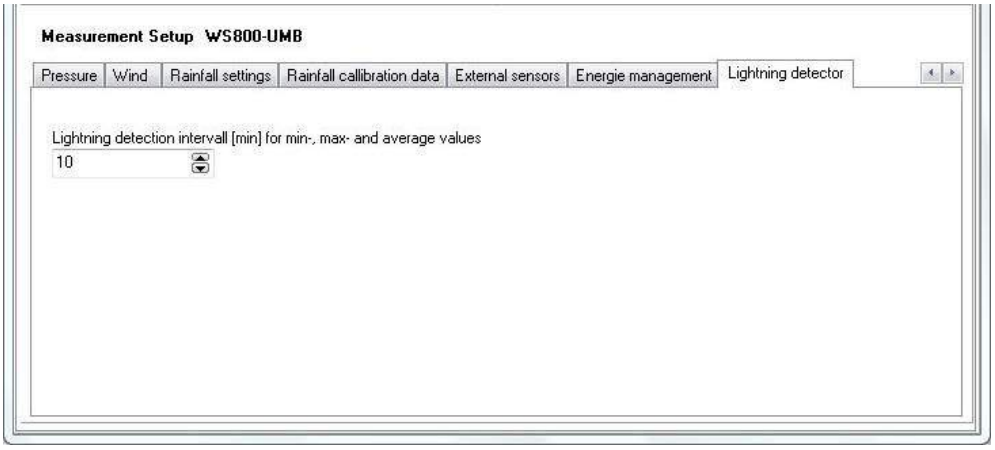

Figure 16: Lightning Sensor Settings

Interval: Time in minutes for minimum, maximum and average value calculation

10.2.11 Energy Management

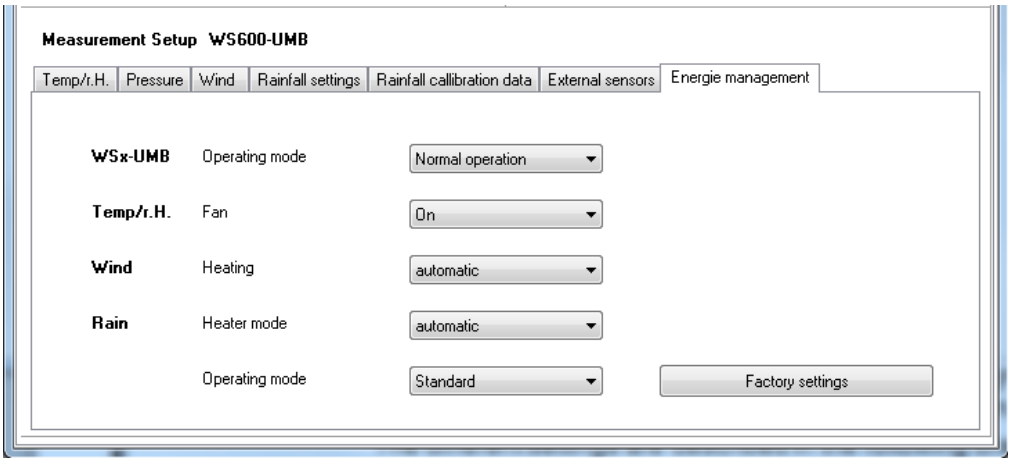

Figure 17: Energy Management Settings

By setting the operating and heating mode, the energy consumption of the device can be adapted to the circumstances of the installation.

The different settings are described in the following chapters:

- operating modes of Smart Weather Sensor from page 40
- operating modes of the heating from page 42

10.2.12 Reset Precipitation Quantity

To reset the accumulated absolute precipitation quantity the UMB-Config-Tool offers the following function:

Options →WSx-UMB reset rain

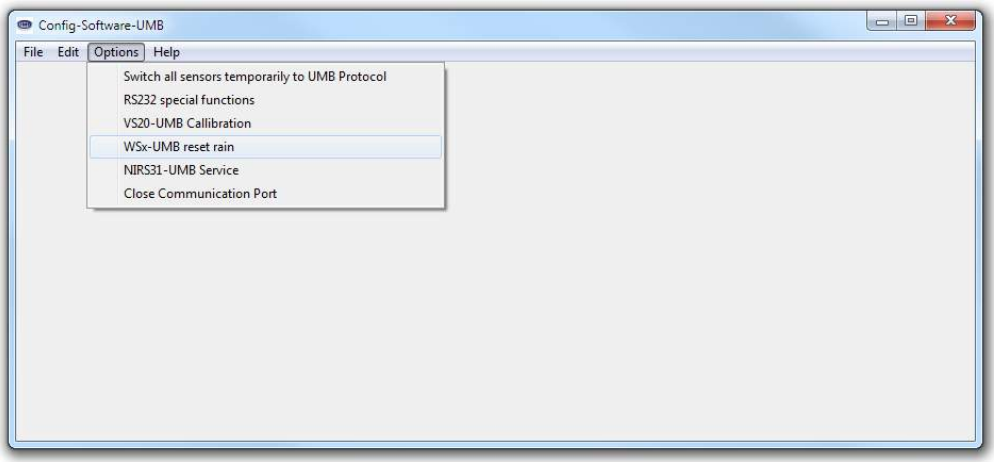

Figure 18: Reset Precipitation Quantity

Confirm the reset with 'Yes'

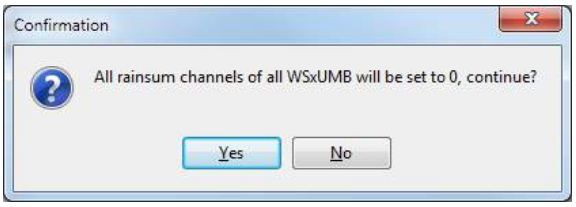

Note: The precipitation quantities are reset in ALL Smart Weather Sensors on the respective UMB network. The devices reboots after this function has been used.

10.2.13 (WS100-UMB only) Setting of Rain Gauge Simulation

Note: For configuration settings of the WS100-UMB do not use UMB-Config-Tool, but ConfigTool.NET. For details of operation please refer to the software manual of ConfigTool.NET.

Note: while the rain gauge simulation is active communication through the serial interface in UMB or another serial protocol is not possible. To still allow access to the device for modification of settings etc. UMB protocol will be active during the first 5 sec after power on. The necessary procedure is described in detail in chapter **Fehler! Verweisquelle konnte nicht gefunden werden.**.

Rain gauge simulation is selected as a protocol setting.

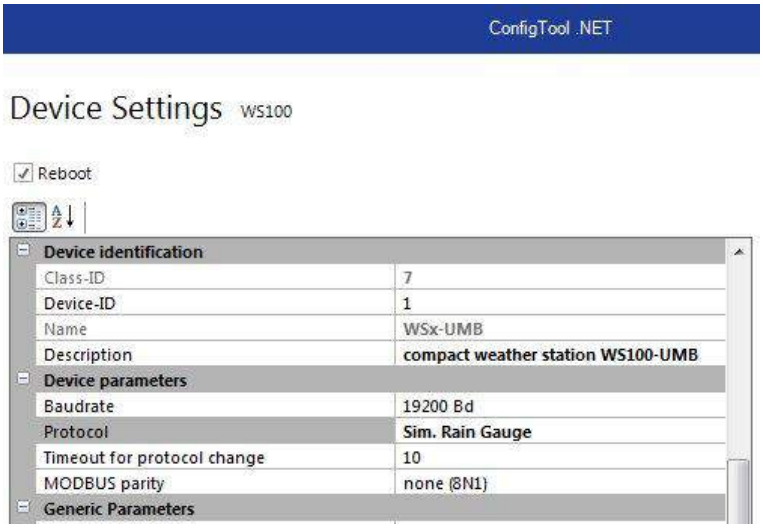

Abb. 19: Select operation mode „Simulated Rain Gauge“

The resolution of the simulated rain gauge is defined in the field „Sim. RainGauge Resolution“. Factory setting is 0.01mm, alternatively 1.0mm or 0.1mm may be selected.

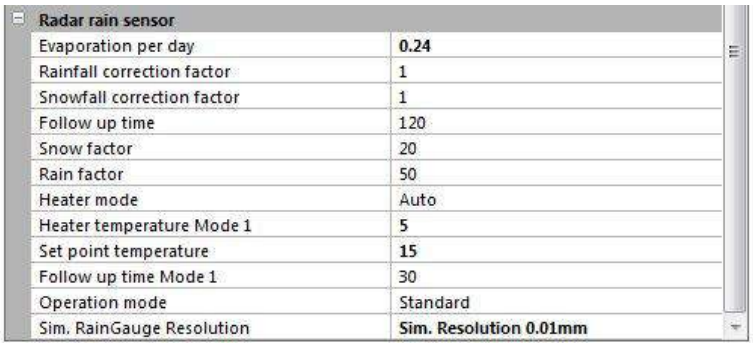

Abb. 20: Configure the resolution of the simulated rain gauge

10.3 Function Test with UMB-Config-Tool

The functions of the Smart Weather Sensor can be tested with the UMB-Config-Tool by polling various channels.

Note: All other devices which are used in the polling process, e.g. modems, LCOM etc., must be disconnected from the UMB network during configuration.

10.3.1 Channels for Measurement Polling

You can select the channel for measurement polling by the UMB-Config-Tool by clicking on the respective channel.

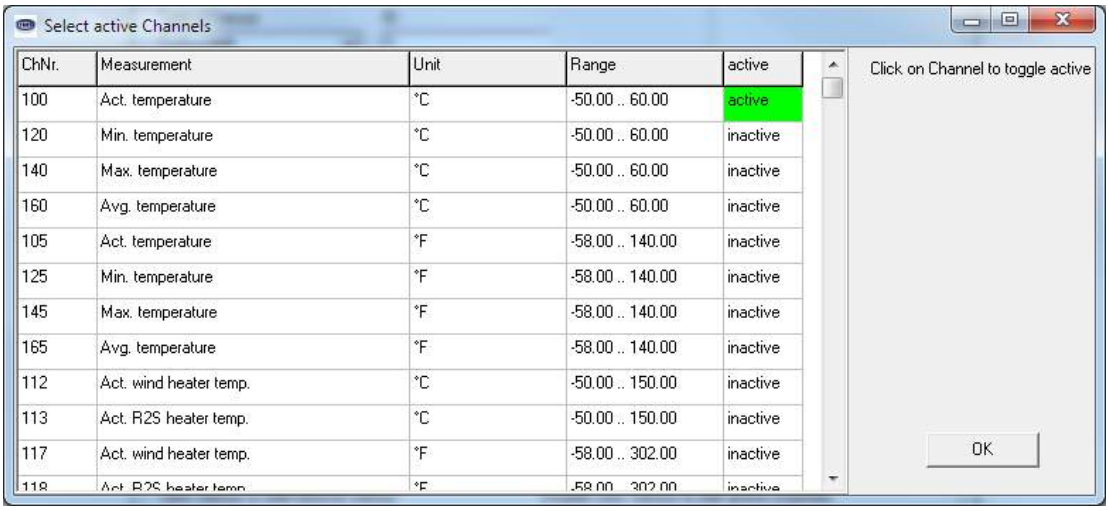

ChNr.	Measurement	Unit	Range	active
100	Act. temperature	°C	-50.00 .. 60.00	active
120	Min. temperature	°C	-50.00 .. 60.00	inactive
140	Max. temperature	°C	-50.00 .. 60.00	inactive
160	Avg. temperature	°C	-50.00 .. 60.00	inactive
105	Act. temperature	°F	-58.00 .. 140.00	inactive
125	Min. temperature	°F	-58.00 .. 140.00	inactive
145	Max. temperature	°F	-58.00 .. 140.00	inactive
165	Avg. temperature	°F	-58.00 .. 140.00	inactive
112	Act. wind heater temp.	°C	-50.00 .. 150.00	inactive
113	Act. R2S heater temp.	°C	-50.00 .. 150.00	inactive
117	Act. wind heater temp.	°F	-58.00 .. 302.00	inactive
118	Act. R2S heater temp.	°F	-58.00 .. 302.00	inactive

Figure 21 Measurement Polling Channels

10.3.2 Example of Measurement Polling

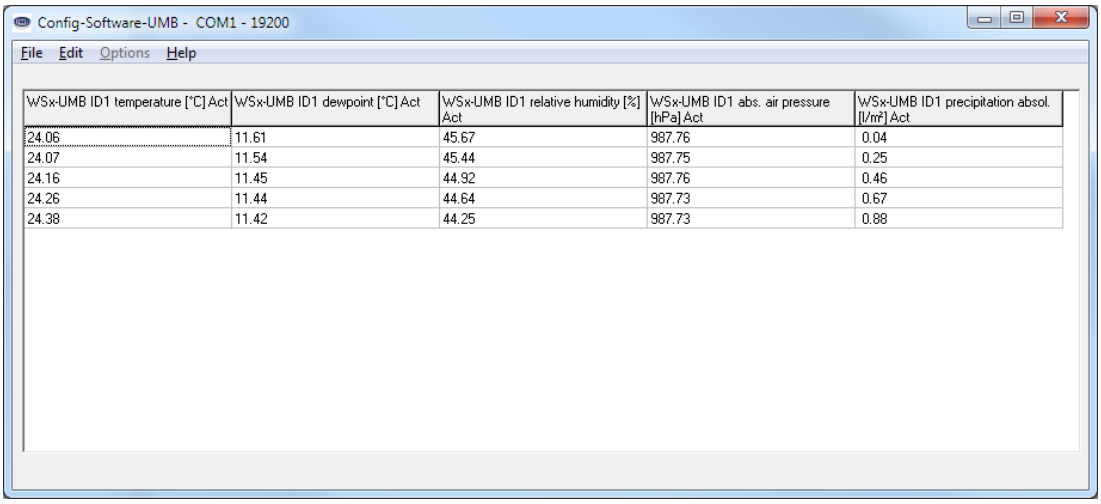

WSx-UMB ID1 temperature [°C] Act	WSx-UMB ID1 dewpoint [°C] Act	WSx-UMB ID1 relative humidity [%] Act	WSx-UMB ID1 abs. air pressure [hPa] Act	WSx-UMB ID1 precipitation absol. [l/m²] Act
24.06	11.61	45.67	987.76	0.04
24.07	11.54	45.44	987.75	0.25
24.16	11.45	44.92	987.76	0.46
24.26	11.44	44.64	987.73	0.67
24.38	11.42	44.25	987.73	0.88

Figure 22 Example of Measurement Polling

Note: The UMB Config Tool is provided for test and configuration purposes only. It is not suitable for the permanent acquisition of measurement data. We recommend the use of professional software solutions for this purpose, e.g. Lufft SmartView3.

10.4 Operating Modes of the Smart Weather Sensor

The power consumption of the Smart Weather Sensor can be adjusted to the properties of the individual installation by setting the operation mode.

The operation of the power save modes however has certain constraints. These have to be considered when designing the installation.

In normal operation, where all specified properties of the Smart Weather Sensor are fully available, the power consumption is mostly determined by heating and fan operation.

10.4.1 Power Saving Mode 1

Following measures are active in power saving mode 1:

- The ventilation of the temperature / humidity unit is switched off
- All heaters are switched off
- The radar rain sensor (WS800-UMB, WS700-UMB, WS600-UMB, WS400-UMB, WS100-UMB) is not working continuously. The sensor is activated once per minute for one second (WS100-UMB: 5sec), if precipitation is detected, it remains turned on until the end of the event, otherwise it is deactivated after this one second again.
- Compass measurement is only performed once after power up. The fan, which is otherwise deactivated, will be switched on shortly for the time of this measurement.
- The WS700-UMB / WS800-UMB increases the measuring cycle time for global radiation from 10 seconds to 1 minute.

Note: This setting has the following restrictions:

- With the fan switched off deviations in temperature and humidity measurement can occur by solar radiation.
- Only limited winter operation is possible in this operating mode because any icing might prevent the correct operation of the rain sensor or wind meter.
- The rain detection may be delayed up to 2 minutes. Short events are possibly not detected. Thus, deviations in the accuracy of the precipitation quantity are possible.

Compared with normal operation the power consumption of a WS600-UMB can be reduced to 10% even neglecting the heating. (during precipitation events the consumption is slightly higher, due to the rain sensor then permanently switched on, about 20% compared to normal operation).

10.4.2 Power Saving Mode 2

Power saving mode 2 permits another relevant reduction of the power consumption, but adds on the other hand more severe restrictions.

In this operation mode the device will be almost completely switched off and will wake up only by the data request for one measurement cycle. During measurement and data transmission the device will be switched on for about 10 – 15 sec. The total consumption will be mostly determined by the data request interval.

Note: This operating mode has the following restrictions:

- All restrictions of power saving mode 1
- Power saving mode 2 is not available for devices with radar rain sensor (WS800-UMB, WS700-UMB, WS600-UMB, WS400-UMB, WS100-UMB). We recommend devices with tipping bucket rain gauge for low power applications.
- The calculation of average, minimum and maximum as well as precipitation intensity are not available. Only instantaneous values will be transmitted.
- Compass measurement is only performed once after power up. The fan, which is otherwise deactivated, will be switched on shortly for the time of this measurement.
- Communication protocol Modbus is not available
- When using the UMB protocol a certain request sequence and timing is required (s. Chap. 19.3.7). The interval length must be at least 15sec to make sure that the measurement and transmission cycle can be completed. Shorter interval could cause the device to stay in transmission state without starting a new measurement.
- The joint operation with other sensors in an UMB network is possible, but it has to be considered that each telegram (even when addressed to another device) will cause the Smart Weather Sensor to wake up for at least several seconds, thus increasing the total power consumption. The minimum interval length must be hold up under consideration of the telegrams with other addresses. Mixed operation of devices in power saving mode 2 with devices in normal operation and fast request rates within the same UMB network is not possible.

10.5 Operating Modes for Equipment Heating

Heating is configured to ‘Automatic’ when the product is delivered. This is the recommended operating mode for heating the sensor.

You can set the following operating modes:

Heater Mode	WS100-UMB	WS200-UMB	WS400-UMB	WS500-UMB	WS501-UMB *)	WS600-UMB **)	WS601-UMB
Automatic	●	●	●	●	●	●	●
Off	●	●	●	●	●	●	●
Mode 1	●		●	●	●	●	●
Eco-Mode 1	●		●			●	

*) is also valid for WS502-UMB, WS503-UMB, WS504-UMB, WS510-UMB

**) is also valid for WS700-UMB and WS800-UMB

Note: Model WS30x-UMB and WS401-UMB are not heated.

The rain sensor and wind meter settings must be adjusted in the respective configuration mask. The examples show the wind meter setting.

10.5.1 Automatic

In this operating mode, the sensor is maintained constantly at the control temperature, generally in order to prevent the effects of snow and ice.

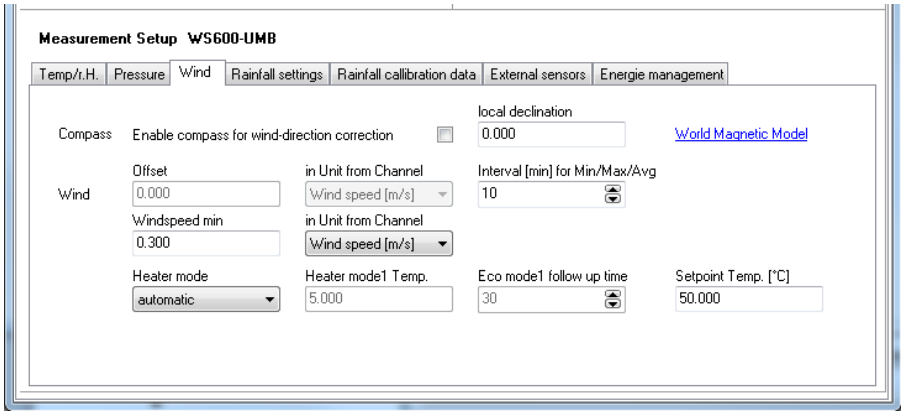

Figure 23: Operating Modes for Equipment Heating

Setpoint Temp.: The heating controls at this temperature (in °C)

The settings for the other values are not relevant.

10.5.2 Off

In the ‘Off’ operating mode heating is completely disabled. Winter operation is not possible in this operating mode because any icing might prevent the correct operation of the rain sensor or wind meter.

The value settings are not relevant.

10.5.3 Mode 1

In ‘Mode 1’ operating mode heating is only enabled when the outside temperature falls below the HeatingMode1 temperature (in °C). In this mode power consumption can be reduced in frost-free situations with no great restriction on winter operation.

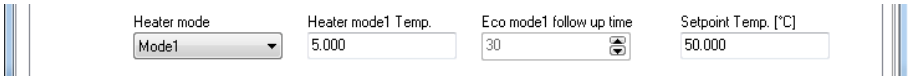

Setpoint Temp.: The heating controls at this temperature (in °C)

Heating mode1 Temp.: Threshold temperature (in °C) with effect from which air temperature heating is enabled

The ‘Eco Mode1 follow-up time’ setting is not relevant.

10.5.4 Eco-Mode 1

Eco Mode1 is an advanced energy saving mode.

Heating is only switched on when the following conditions are met:

- The outside temperature is below the threshold temperature and precipitation was detected. Heating then runs at the control temperature for 30 minutes (after the last precipitation event).
- When the outside temperature lies constantly below the threshold temperature and there was no heating for more than 20h, heating is switched on for 30 minutes as a precautionary measure in order to thaw any icing.

However, the precautionary 20h-heating only runs if the outside temperature was measured at below the threshold temperature for the entire period and conditions were constantly bright for at least 3 hours.

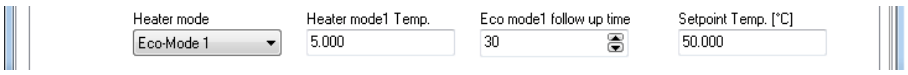

Setpoint Temp.:	The heating controls at this temperature (in °C)
Heating mode1 Temp.:	Threshold temperature (in °C) with effect from which heating is enabled
Eco mode1 follow-up time:	Follow-up time (in minutes)

Examples:

Outside temperature constantly below 5°C; no precipitation for more than 24h

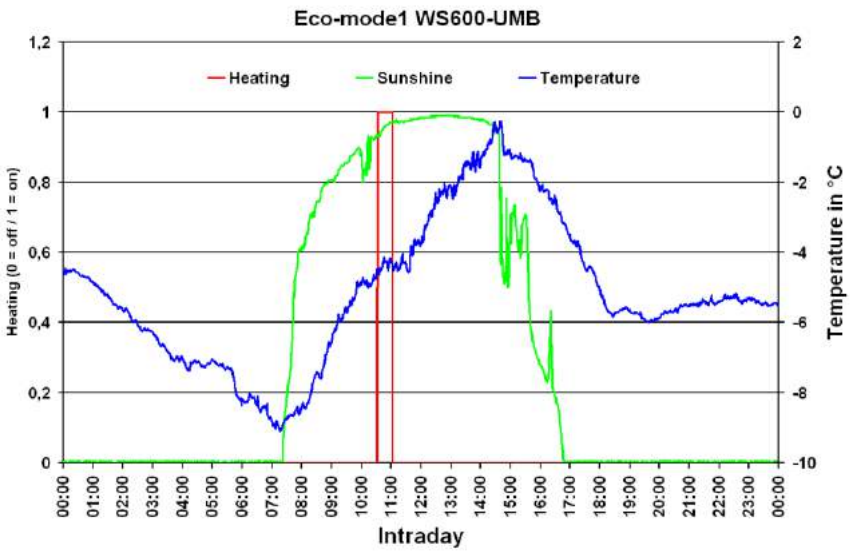

Outside temperature constantly below 5°C; with precipitation

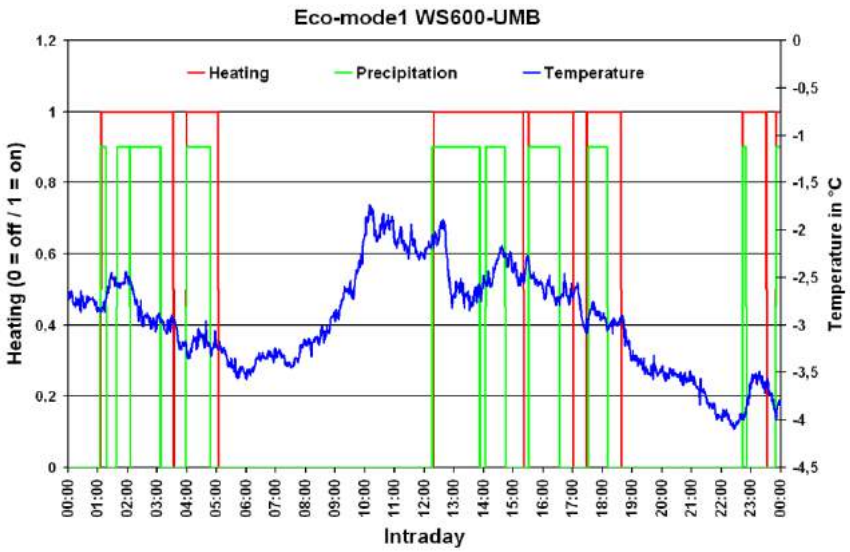

11 Firmware Update

To keep the sensor in accordance with the latest state-of-the-art, it is possible to carry out a firmware update on site with no need to remove the sensor and return it to the manufacturer.

The firmware update is carried out with the aid of the UMB-Config-Tool.

The firmware update of the WS100-UMB is carried out with ConfigTool.NET.

The description of the firmware update can be found in the instructions for the UMB-Config-Tool. Please download the latest firmware and UMB-Config-Tool from our website www.lufft.com and install it on a Windows® PC. You can find the instructions here:

Note: When a firmware update takes place, under certain circumstances the absolute precipitation quantities are reset (channel 600 – 660).

There is one firmware for the entire product family (except WS100-UMB) which supports all models (WSx_Release_Vxx.mot).

The firmware for WS100-UMB is named WS100_Release_Vxx.bin.

Important Note: please read the included text file in WSx_Release_Vxx.zip; it contains important information about the update!

12 Maintenance

In principle the equipment is maintenance-free.

However, it is recommended to carry out a functional test on an annual basis. When doing so, pay attention to the following points:

- Visual inspection of the equipment for soiling
- Check the sensors by carrying out a measurement request
- Check the operation of the fan (not on WS200-UMB)

In addition, an annual calibration check by the manufacturer is recommended for the humidity sensor (not on WS200-UMB). It is not possible to remove or replace the humidity sensor. The complete Smart Weather Sensor must be sent to the manufacturer for testing.

Cleaning of the glass dome at regular intervals is suggested for devices with global radiation measurement. The length of the interval should be adapted to the local degree of pollution.

Devices with precipitation measurement by rain gauge (WS401-UMB, WS601-UMB): The rain gauge funnel needs to be cleaned at regular intervals (see below). The length of the interval should be adapted to the local degree of pollution.

12.1 Maintenance of the Rain Gauge

The function of the rain gauge will be significantly influenced by pollution of the funnel or the tipping bucket mechanism. Regular check and, if necessary, cleaning is required. The maintenance interval depends very much on local conditions and also on seasons (leaves, pollen, etc.) and therefore cannot be exactly defined here (it may be in the range of weeks).

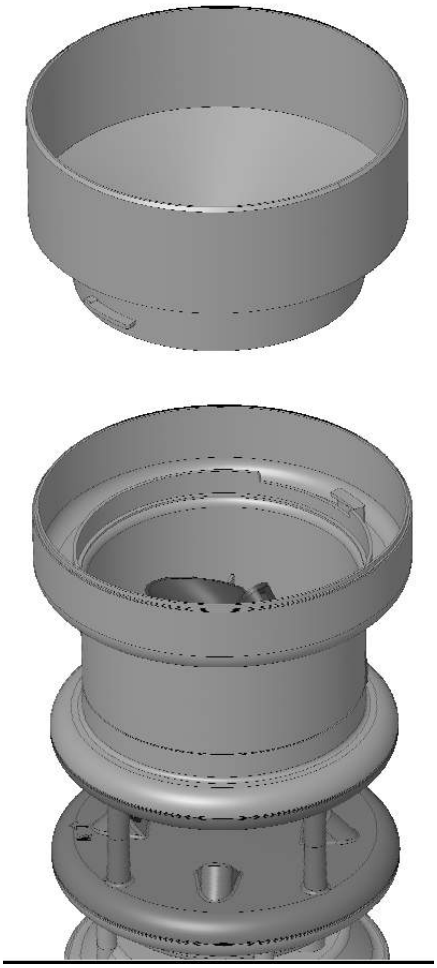

Figure 24: WS601-UMB with removed funnel

- Only clean when obviously polluted
- Avoid moving the tipping mechanism (otherwise wrong counts will occur)
- Use water, soft cloth and / or a soft brush for cleaning
- Unlock funnel by turning it to the left and lift it off
- Clean funnel, specially the sieve slots
- Check the inside of the rain gauge module for pollution, especially for spider webs and insects, if necessary, clean it
- Check tipping bucket for pollution, if necessary wash carefully with clean water. Caution: each movement of the bucket generates a counting pulse and thus may cause faulty precipitation amounts
- Check water drain, clean if necessary
- Put funnel back in place and lock it by turning it to the right

13 Technical Data

Power supply: 24VDC +/- 10%
12VDC with restrictions (see page 28)
Device version >= 037: 4 ... 32V DC
Limitations apply in case of supply voltage less than 12V (see p. 28 f.)

Current consumption – sensor; values for devices prior to version 037 in brackets:

Mode[1]	Standard		Power Saving Mode 1		Power Saving Mode 2	
Supply	**24VDC[2]**	**12VDC**	**24VDC**	**12VDC**	**24VDC**	**12VDC**
WS100-UMB	42 mA	82 mA	17 mA	33 mA	--	--
WS200-UMB	16 mA	25 mA	15 mA	24 mA	1 (4) mA	2 mA
WS300-UMB	135 mA	70 mA	7 mA	7 mA	1 (4) mA	2 mA
WS301-UMB WS302-UMB WS303-UMB WS304-UMB WS310-UMB	135 mA	70 mA	8 mA	8 mA	1 (4) mA	2 mA
WS400-UMB	160 mA	110 mA	7 mA	7 mA	--	--
WS401-UMB	130 mA	65 mA	6 mA	6 mA	1 (4) mA	2 mA
WS500-UMB	140 mA	85 mA	16 mA	25 mA	1 (4) mA	2 mA
WS501-UMB WS502-UMB WS503-UMB WS504-UMB WS510-UMB	145 mA	85 mA	16 mA	25 mA	1 (4) mA	2 mA
WS600-UMB WS700-UMB WS800-UMB	160 mA	130 mA	16 mA	25 mA	--	--
WS601-UMB	140 mA	85 mA	15 mA	24 mA	1 (4) mA	2 mA

Current consumption and power input - heating:

WS100-UMB	380 mA / 9.1VA at 24VDC
WS200-UMB	833 mA / 20VA at 24VDC
WS400-UMB	833 mA / 20VA at 24VDC
WS500-UMB, WS501-UMB, WS502-UMB WS503-UMB, WS504-UMB, WS510-UMB	833 mA / 20VA at 24VDC
WS600-UMB, WS700-UMB, WS800-UMB	1,7 A / 40VA at 24VDC
WS601-UMB	833mA / 20VA at 24VDC

Dimensions including mounting bracket:

WS100-UMB	Ø 150mm, height 190mm
WS200-UMB	Ø 150mm, height 194mm
WS300-UMB	Ø 150mm, height 223mm
WS301-UMB	Ø 150mm, height 268mm
WS302-UMB	Ø 150mm, height 253mm
WS303-UMB	Ø 150mm, height 328mm
WS304-UMB	Ø 150mm, height 313mm
WS310-UMB	Ø 150mm, height 311mm
WS400-UMB	Ø 150mm, height 279mm
WS401-UMB	Ø 164mm, height 380mm
WS500-UMB	Ø 150mm, height 287mm
WS501-UMB	Ø 150mm, height 332mm
WS502-UMB	Ø 150mm, height 377mm
WS503-UMB	Ø 150mm, height 392mm
WS504-UMB	Ø 150mm, height 317mm
WS510-UMB	Ø 150mm, height 376mm
WS600-UMB	Ø 150mm, height 343mm
WS601-UMB	Ø 164mm, height 445mm
WS700-UMB	Ø 150mm, height 344mm
WS800-UMB	Ø 150mm, height 344mm

[1] Description of operating modes, see page 35
[2] Factory default, recommended setting

Weight including mounting bracket, excluding connection cable:

WS100-UMB	ca. 0.6 kg
WS200-UMB	ca. 0.8 kg
WS300-UMB	ca. 1.0 kg
WS400-UMB, WS301-UMB, WS302-UMB, WS303-UMB, WS304-UMB, WS310-UMB	ca. 1.3 kg
WS401-UMB	ca. 1.5 kg
WS500-UMB	ca. 1.2 kg
WS600-UMB, WS501-UMB, WS502-UMB, WS503-UMB, WS504-UMB, WS700-UMB WS510-UMB, WS800-UMB	ca. 1.5 kg
WS601-UMB	ca. 1.7 kg

Fastening: Stainless steel mast bracket for Ø 60 - 76mm

Protection class: III (SELV)
Protection type: IP66

Storage Conditions

Permissible storage temperature: -50°C ... +70°C
Permissible relative humidity: 0 ... 100% RH

Operating Conditions

Permissible operating temperature: -50°C ... +60°C
Permissible relative humidity: 0 ... 100% RH
Permissible altitude above sea level: N/A

RS485 interface, 2 wire, half-duplex

Data bits: 8 (SDI-12 mode: 7)
Stop bit: 1
Parity: No (SDI-12 mode: even, Modbus mode none or even)
Tri-state: 2 bits after stop bit edge
Adjustable baud rates: 1200, 2400, 4800, 9600, 14400, 19200[3], 28800, 57600

(In SDI-12 mode, the interface is changed to meet the requirements of the standard.)

Housing: Plastic (PC)

[3]Factory setting; baud rate for operation with ISOCON-UMB and firmware update.

13.1 Measuring Range / Accuracy

13.1.1 Air temperature

Measurement process:	NTC
Measuring range:	-50°C ... +60°C
Resolution:	0.1°C (-20°C...+50°C), otherwise 0.2°C
Sensor accuracy:	+/- 0.2°C (-20°C ... +50°C), otherwise +/-0.5°C (>-30°C)
Sampling rate:	1 minute
Units:	°C; °F

(WS100-UMB: the accuracy of the air temperature service channels is not specified)

13.1.2 Humidity

Measurement process:	Capacitive
Measuring range:	0 ... 100% RH
Resolution:	0.1% RH
Accuracy:	+/- 2% RH
Sampling rate:	1 minute
Units:	% RH; g/m³; g/kg

13.1.3 Dewpoint Temperature

Measurement process:	Passive, calculated from temperature and humidity
Measuring range:	-50°C ... +60°C
Resolution:	0.1°C
Accuracy:	Computed +/- 0.7°C
Units:	°C; °F

13.1.4 Air Pressure

Measurement process:	MEMS sensor - capacitive
Measuring range:	300 ... 1200hPa
Resolution:	0.1hPa
Accuracy:	+/- 0.5hPa (0 … +40°C)
Sampling rate:	1 minute
Unit:	hPa

13.1.5 Wind Speed

Measurement process:	Ultrasonic
Measuring range:	0 … 75m/s (WS601-UMB: 0 … 30m/s)
Resolution:	0.1m/s
Accuracy:	±0.3 m/s or ±3% (0...35 m/s) ±5% (>35m/s) RMS
Response threshold:	0.3 m/s
Internal sampling frequency:	15Hz
Instantaneous value:	1 sec / 10sec
Output rate for average and peak gust values:	1min – 10min (peak calculated from 1sec values)
Units:	m/s; km/h; mph; kts

13.1.6 Wind Direction

Measurement process:	Ultrasonic
Measuring range:	0 – 359.9°
Resolution:	0.1°
Accuracy:	< 3° (> 1m/s) RMSE
Response threshold:	0.3 m/s
Internal sampling frequency:	15Hz
Instantaneous value:	1 sec / 10sec
Output rate for average and peak gust values:	1min – 10min (peak calculated from 1sec values)

13.1.7 Precipitation

13.1.7.1 WS100-UMB / WS400-UMB / WS600-UMB / WS700-UMB /WS800-UMB

Measurement process:	Radar sensor
Measuring range (drop size):	0.3 mm ... 5.0 mm
Liquid precipitation resolution:	0.01 mm
Precipitation types:	Rain, snow
Repeatability:	Typically > 90%
Response threshold:	0.002 mm
Sampling rate:	Event-dependent on reaching response threshold
Precipitation intensity:	0 … 200 mm/h; Sampling rate 1 minute

13.1.7.2 WS401-UMB / WS601-UMB

Measurement process:	Rain Gauge
Liquid precipitation resolution:	0.2 mm / 0.5mm (adjustable by reduction ring)
Precipitation types:	Rain
Accuracy:	2%
Sampling rate:	1 minute

13.1.8 Compass

Measurement process:	Integrated electronic compass
Measurement range:	0 ... 359°
Resolution:	1.0°
Accuracy:	+/- 10°
Sampling rate:	5 minutes

13.1.9 Global Radiation

Measurement Process	Thermopile pyranometer
Measurement Range	0.0 ... 2000.0 W/m²
Resolution	< 1W/m²
Sampling Rate	10 seconds

13.1.9.1 WS301-UMB / WS501-UMB

Response time (95%)	18s	
Non-stability(change/year)	<1%	
Non-linearity (0 to 1000 W/m²)	<1%	
Directional error (at 80° with 1000 W/m²)		<20 W/m²
Temperature dependence of sensitivity		<5% (-10 to +40°C)
Tilt error (at 1000 W/m²)	<1%	
Spectral range (50% points)	300 ... 2800nm	

13.1.9.2 WS302-UMB / WS502-UMB / WS700-UMB / WS800-UMB

Response time (95%)	<1s
Spectral range (50% points)	300 ... 1100nm

13.1.9.3 WS310-UMB / WS510-UMB

Response time (95%)	5s	
Non-stability(change/year)	<0.5%	
Non-linearity (0 to 1000 W/m²)	<0.2%	
Directional error (at 80° with 1000 W/m²)		<10 W/m²
Temperature dependence of sensitivity		<1% (-10 to +40°C)
Tilt error (at 1000 W/m²)	<0.2%	
Spectral range (50% points)	285 ... 2800nm	

13.1.10 External Temperature SensorWT1 / WST1

Measurement process:	NTC
Measuring range:	-40°C ... +80°C
Resolution:	0.25°C
Sensor accuracy:	+/- 1°C (WST1: +/-0.3°C between -10°C ...+10°C)
Sampling rate:	1 minute
Units:	°C; °F

13.1.11 External Rain GaugeWTB100

Measurement process:	Rain Gauge with bounce-free reed contact (normally closed)
Liquid precipitation resolution:	0.2 mm / 0.5mm (adjustable by reduction ring)
Precipitation types:	Rain
Accuracy:	2%
Sampling rate:	1 minute

In principle, all rain sensors with bounce-free reed contact (normally open or normally closed) and with a resolution of 0.1 mm, 0.2 mm, 0.5 mm or 1.0 mm can be used.

13.2 Drawings

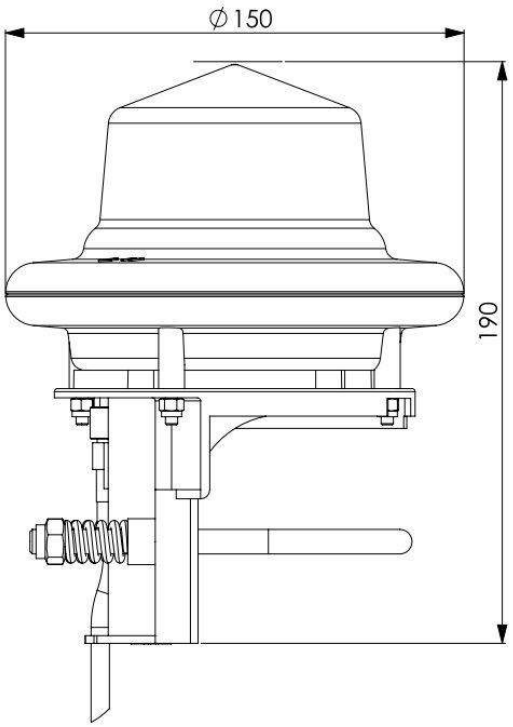

Figure 25: WS100-UMB

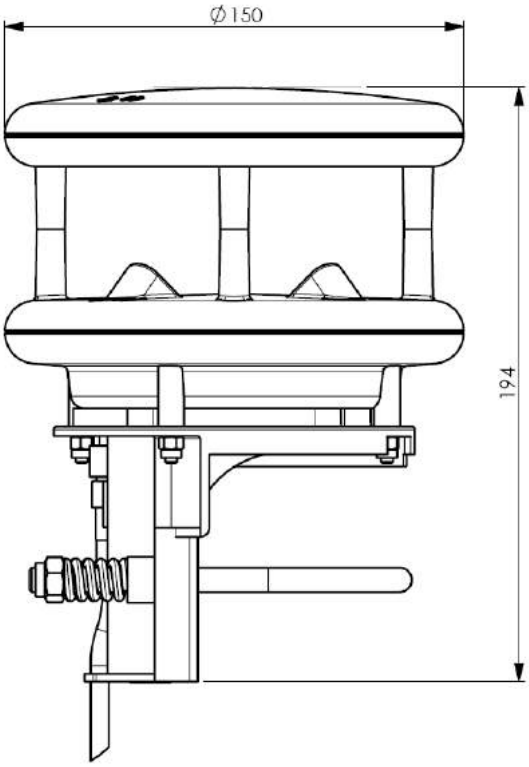

Figure 26: WS200-UMB

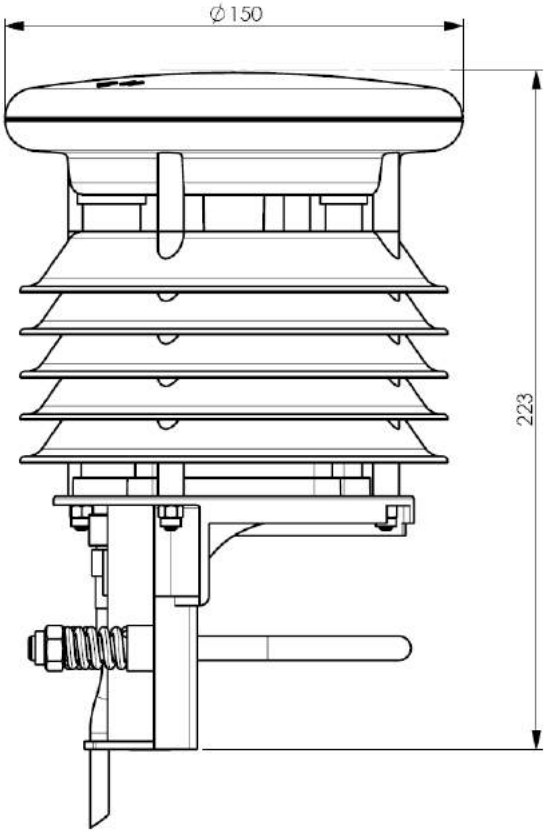

Figure 27: WS200-UMB

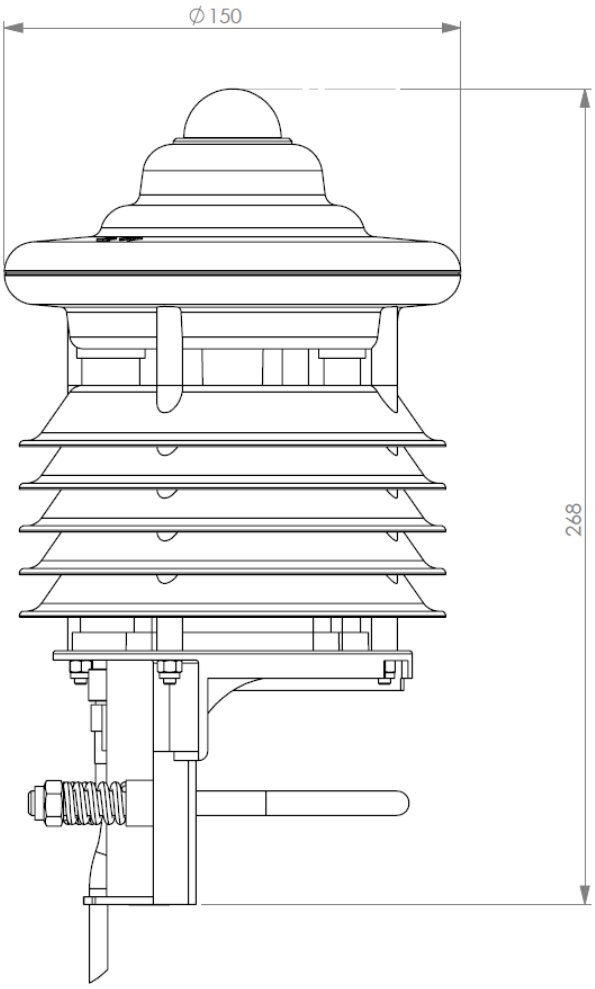

Figure 28: WS301-UMB

WS302-UMB, WS303-UMB und WS304-UMB are similar.

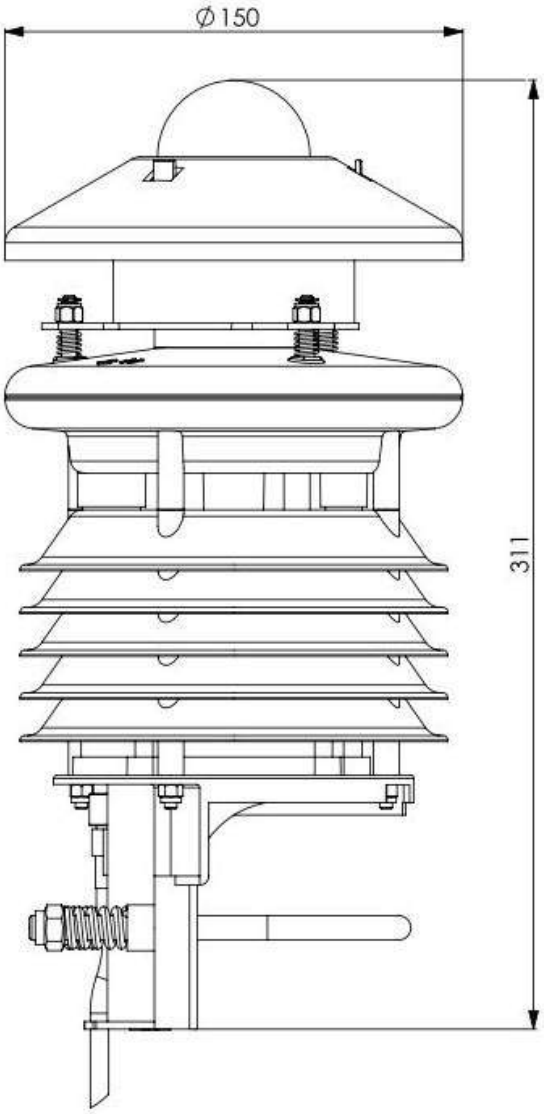

Figure 29: WS310-UMB

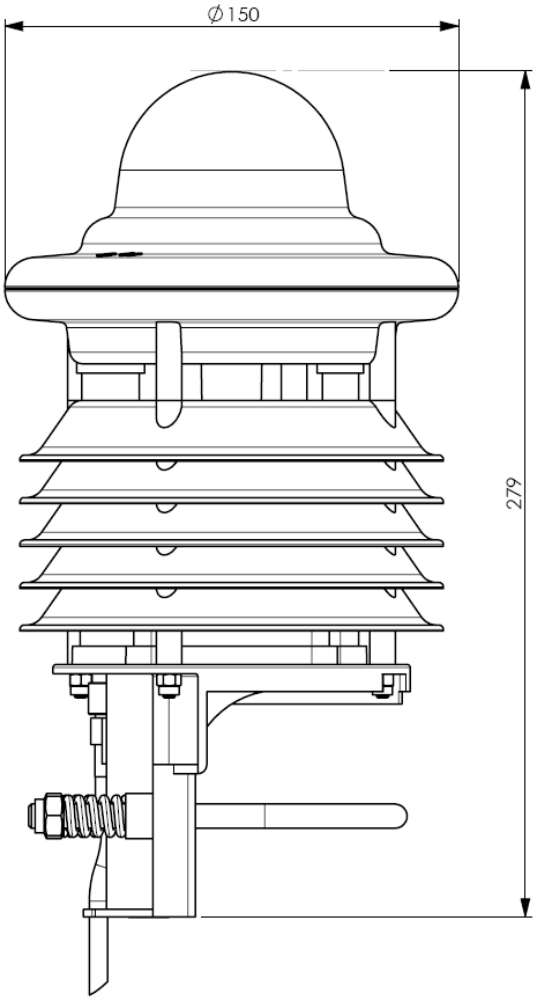

Figure 30: WS400-UMB

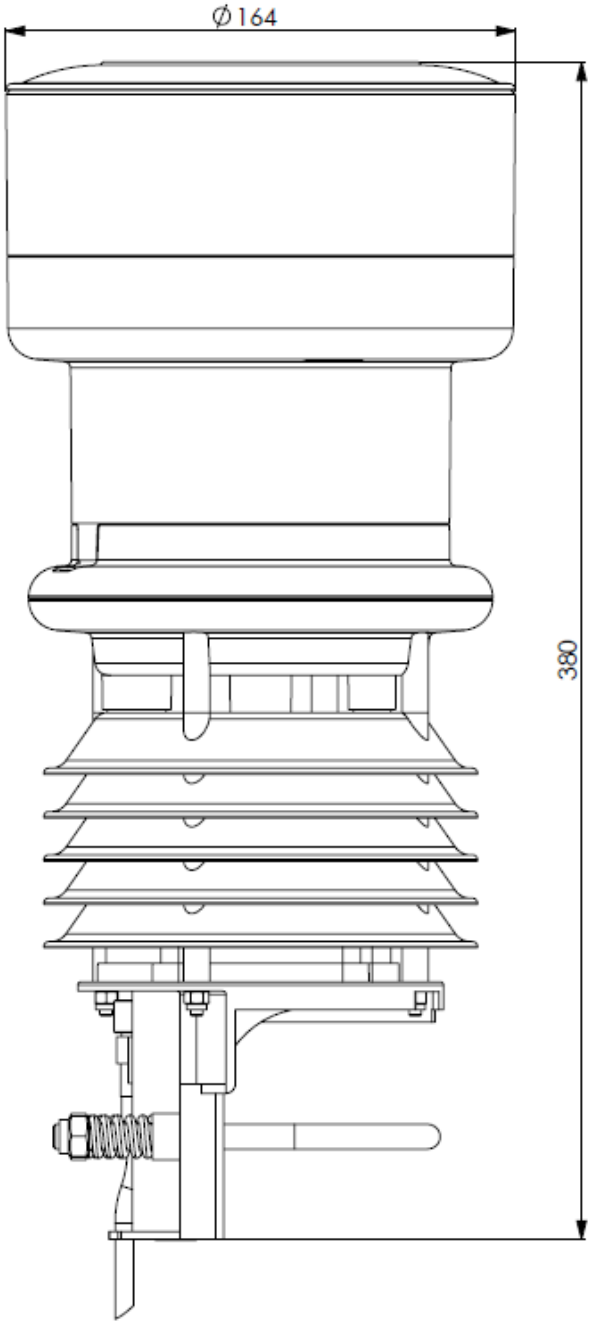

Figure 31: WS401-UMB

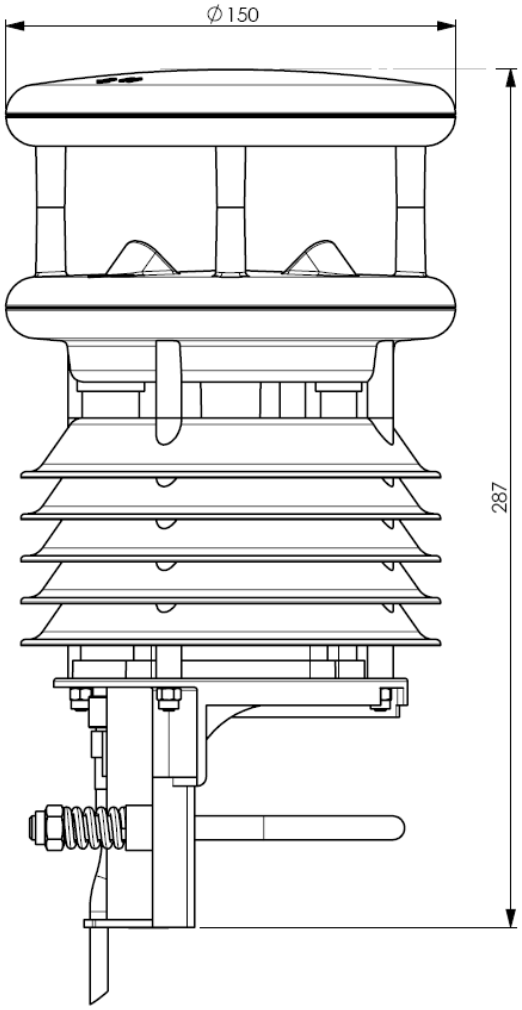

Figure 32: WS500-UMB

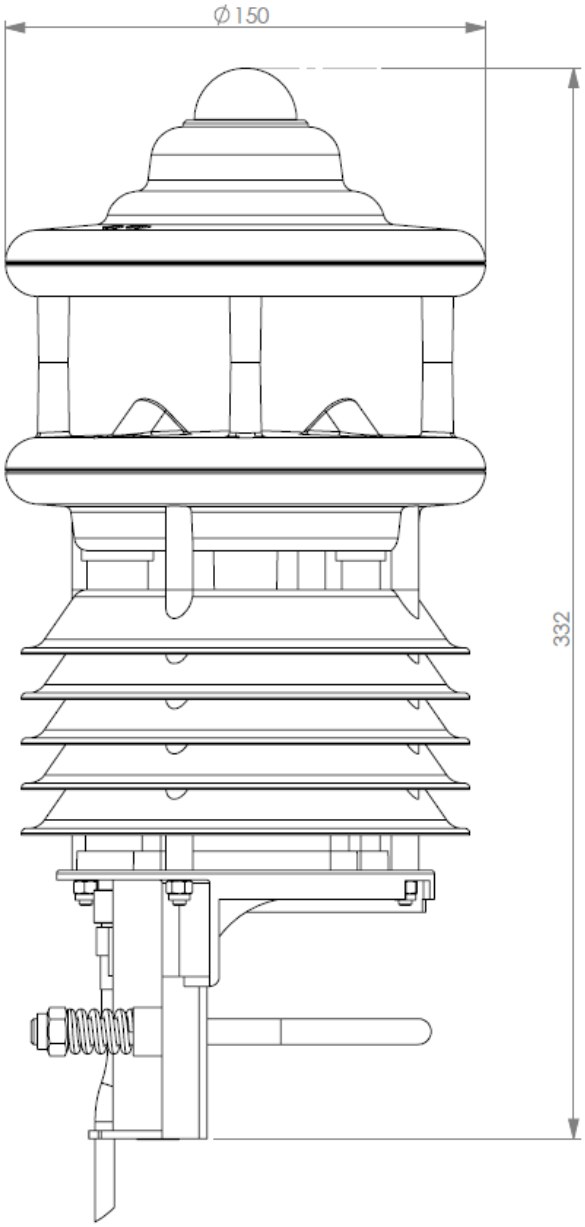

Figure 33: WS501-UMB

WS502-UMB, WS503-UMB und WS504-UMB are similar.

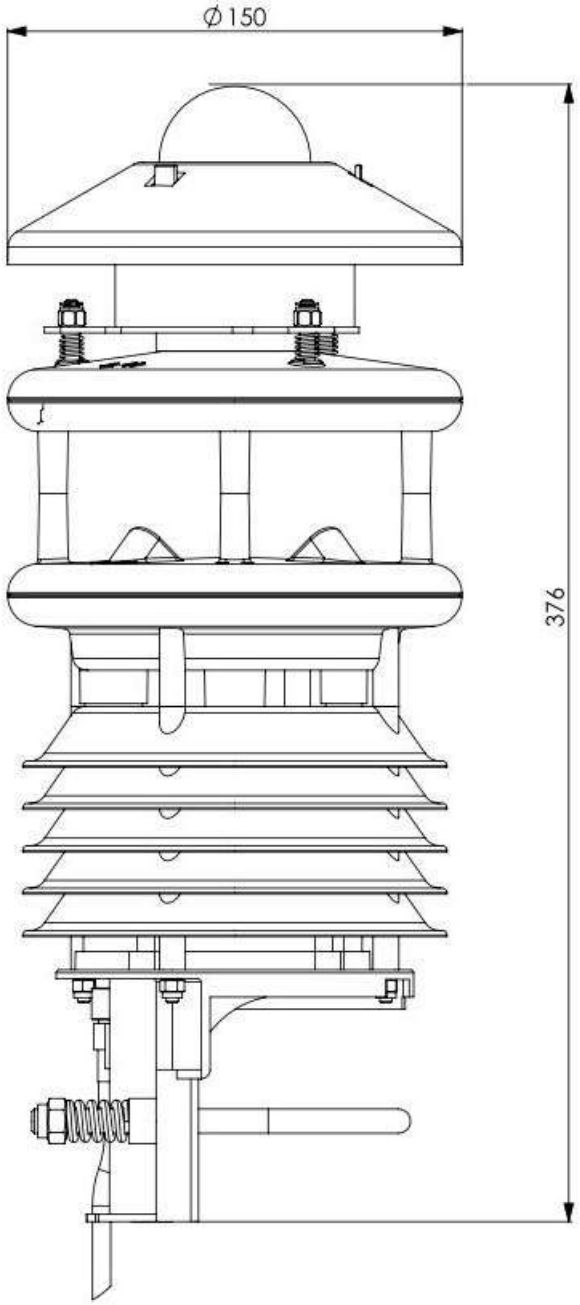

Figure 34: WS510-UMB

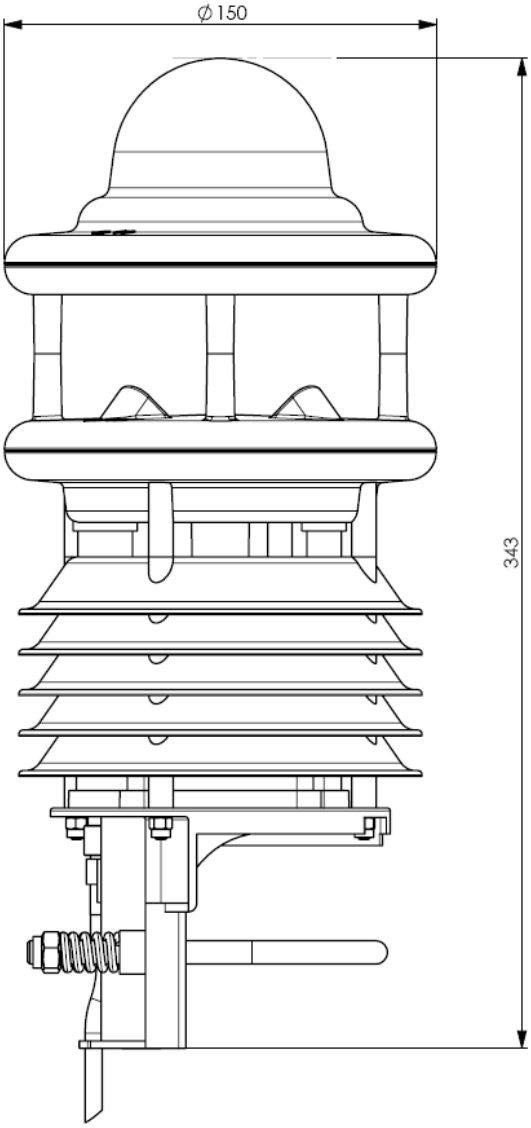

Figure 35: WS600-UMB

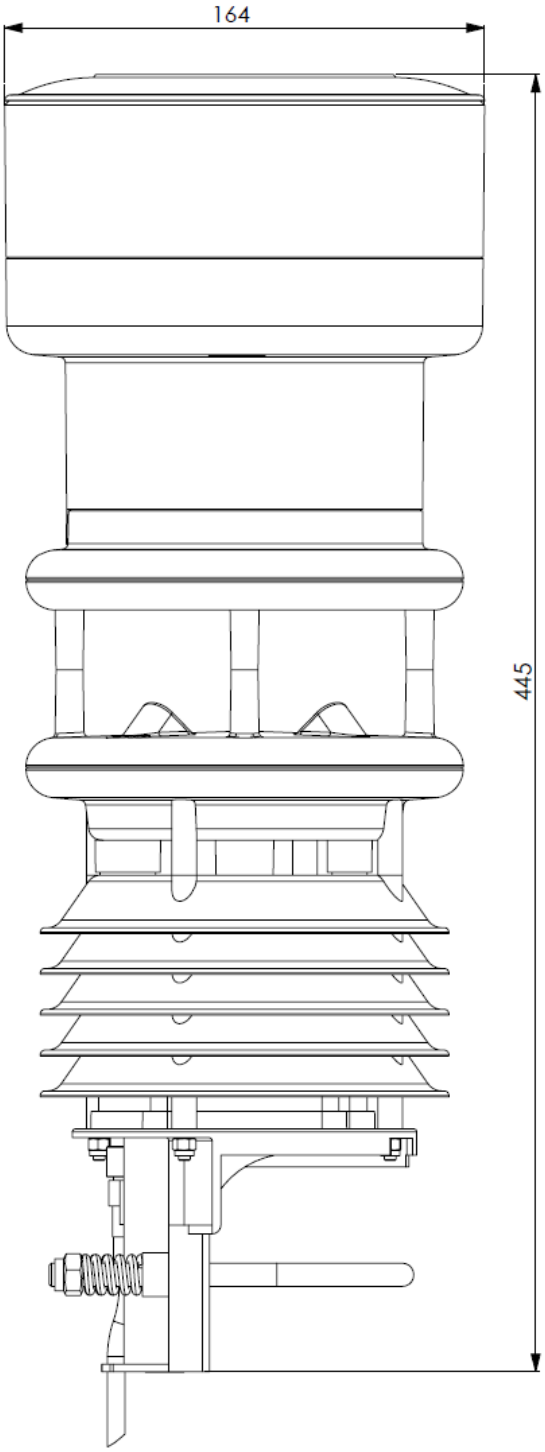

Figure 36: WS601-UMB

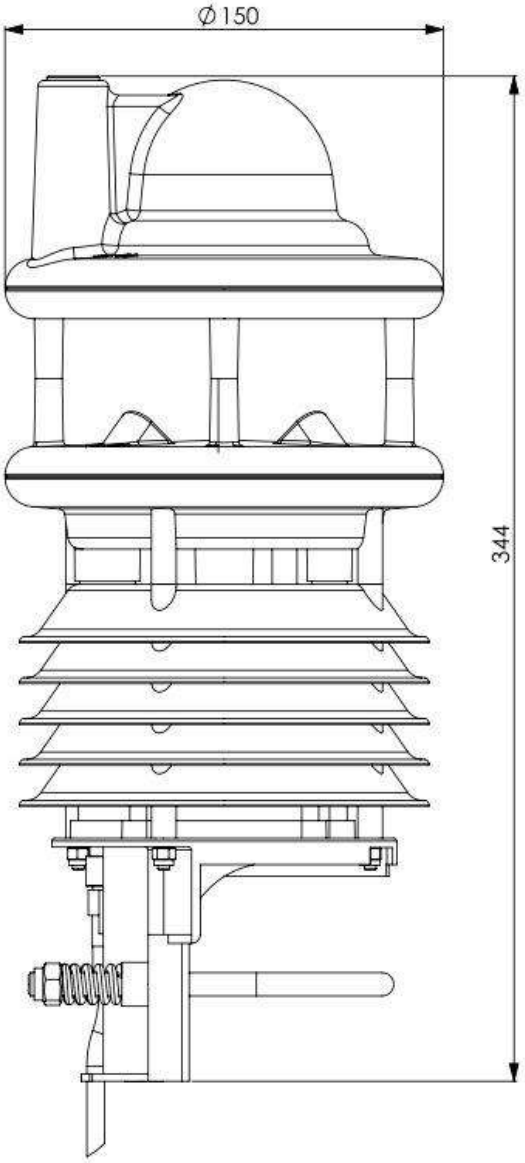

Figure 37: WS700-UMB, WS800-UMB

14 EC Certificate of Conformity

Product: **Smart Weather Sensor**

Type:
WS100-UMB (Order No.: 8367.U03 / 8367.U04)
WS200-UMB (Order No.: 8371.U01)
WS300-UMB (Order No.: 8372.U01)
WS301-UMB (Order No.: 8374.U01)
WS302-UMB (Order No.: 8374.U10)
WS303-UMB (Order No.: 8374.U11)
WS304-UMB (Order No.: 8374.U12)
WS310-UMB (Order No.: 8374.U13)
WS400-UMB (Order No.: 8369.U01 / 8369.U02)
WS401-UMB (Order No.: 8377.U01)
WS500-UMB (Order No.: 8373.U01)
WS501-UMB (Order No.: 8375.U01)
WS502-UMB (Order No.: 8375.U10)
WS503-UMB (Order No.: 8375.U11)
WS504-UMB (Order No.: 8375.U12)
WS510-UMB (Order No.: 8375.U13)
WS600-UMB (Order No.: 8370.U01 / 8370.U02)
WS601-UMB (Order No.: 8376.U01)
WS700-UMB (Order No.: 8380.U01)
WS800-UMB (Order No.: 8381.U01)

We herewith certify that the above mentioned equipment complies in design and construction with the Directives of the European Union and specifically the EMC Directive in accordance with 2004/108/EC, the RoHS Directive 2011/65/EU and, where required, Directive 2014/53/EU.

The complete Certificate of Conformity is available for download from the Lufft website www.lufft.com

14.1 WS100 FCC Compliance Statement (US)

Product: Smart Weather Sensor
Type: WS100-UMB (Order No.: 8367.U03 / 8367.U04)

This device contains FCCID: UF9WS100

This device complies with part 15 of the FCC Rules. Operation is subject to the following two conditions:
(1) This device may not cause harmful interference, and
(2) this device must accept any interference received, including interference that may cause undesired operation.

Changes and modifications not expressly approved by manufacturer could void the user's authority to operate the equipment.

14.2 WS 100 IC Compliance Statement (CA)

Product: Smart Weather Sensor
Type: WS100-UMB (Order No.: 8367.U03 / 8367.U04)

This equipment contains equipment certified under ICID: 6650A-WS100

This device complies with Industry Canada licence-exempt RSS standard(s).
Operation is subject to the following two conditions:
(1) This device may not cause interference, and
(2) this device must accept any interference received, including interference that may cause undesired operation of the device.

Le présent appareil est conforme aux CNR d'Industrie Canada applicable aux appareils radio exempts de licence. L'exploration est autorisée aux deux conditions suivantes:
(1) l'appareil ne doit pas produire de brouillage, et
(2) l'utilisateur de l'appareil doit accepter tout brouillage radioélectrique subi, même si le bouillage est susceptible d'en compromettre le fonctionnement.

15 Fault Description

Error description	Cause - Remedy
Device does not allow polling / does not respond	- Check power supply - Check interface connection - Incorrect device ID → check ID; devices are delivered with ID 1.
The device measures precipitation but it is not raining	Check that the sensor was installed correctly in accordance with the instructions.
The measured temperature appears too high / measured humidity appears too low	Check the operation of the fan on the underside of the device.
Wind direction values are incorrect	Device is not correctly aligned → check that the device is aligned to the North.
Device transmits error value 24h (36d)	A channel is being polled that is not available on this device type; e.g. Channel 200 = humidity is being polled on a WS200-UMB.
Device transmits error value 28h (40d)	The device is in the initialization phase following startup→ the device delivers measurements after approx. 10 seconds.
Device transmits error value 50h (80d)	The device is being operated above the limit of the specified measuring range.
Device transmits error value 51h (81d)	The device is being operated below the limit of the specified measuring range.
Device transmits error value 55h (85d) during wind measurement	The device is unable to execute a valid measurement due to the ambient conditions. This may be due to the following reasons: - The device is being operated well above the limit of the specified measuring range - Very strong horizontal rain or snow - The wind meter sensors are very dirty → clean sensor - The wind meter sensors are iced over → check heating mode in the configuration and check heating function / connection - There are foreign objects within the measuring section of the wind meter - One of the wind meter's sensors is faulty → return device to manufacturer for repair
The quality of the wind measurement is not always100%	In normal operation the device should always transmit 90 – 100%. Values up to 50% do not represent a general problem. When the error value 55h (85d) is transmitted this value is 0%. If the device permanently transmits values below 50% this may mean that there is a fault.
Device transmits an error value not listed here	This may be due to a number of reasons → contact the manufacturer's technical support department.

16 Disposal

16.1 Within the EC

The device shall be disposed of in accordance with European Directives 2002/96/EC and 2003/108/EC (waste electrical and electronic equipment).

16.2 Outside the EC

Please comply with the applicable regulations for the proper disposal of waste electrical and electronic equipment in your respective country.

17 Repair / Corrective Maintenance

Please arrange for any faulty equipment to be checked and, if necessary, repaired by the manufacturer exclusively. Do not open the equipment and do not under any circumstances attempt to carry out your own repairs.

In matters of warranty or repair please contact:

G. Lufft Mess- und Regeltechnik GmbH

Gutenbergstraße 20
70736 Fellbach

P.O. Box 4252
70719 Fellbach

Germany

Phone: +49 711 51822-0
Hotline: +49 711 51822-52
Fax: +49 711 51822-41

E-mail: info@lufft.de

or your local distributor.

17.1 Technical Support

Our Hotline is available for technical questions via the following e-mail address:

hotline@lufft.de

You can also consult frequently asked questions at http://www.lufft.com/ (menu header: SUPPORT / FAQs).

18 External Sensor

18.1 External Temperature and Precipitation Sensors

18.1.1 Connection of Temperature and Precipitation Sensors

Additional external sensor can cover the requirements of special measurement requirements or extend the functionality of Smart Weather Sensors.

Currently the accessory list includes external temperature sensors and the precipitation detection by tipping bucket rain gauge.

One input is available for this extension, so alternatively one temperature sensor or one precipitation sensor may be used.

The connection uses the standard connector plug of the Smart Weather Sensor, so normally the external device will be connected at the end of the cable included with the delivery, in the control cabinet. As this cable is part of the measuring line care shall be taken when designing the cabling to avoid parasitic coupling etc. The cable should be as short as possible. In special cases, e.g. when the external sensor is mounted near to the Smart Weather Sensor while the control cabinet is distant, the installation of an additional distribution box should be considered.

The external sensor is connected to pins 5 and 6 of the connector plug, i.e. the grey and pink wires of the standard cable.

All currently available sensors are unipolar, so the connection sequence is not relevant.

The Smart Weather Sensor must be configured for the selected type of external sensor (temperature or precipitation) to enable the correct evaluation of the measurement data. The selection of the sensor type is done through the UMB Config Tool.

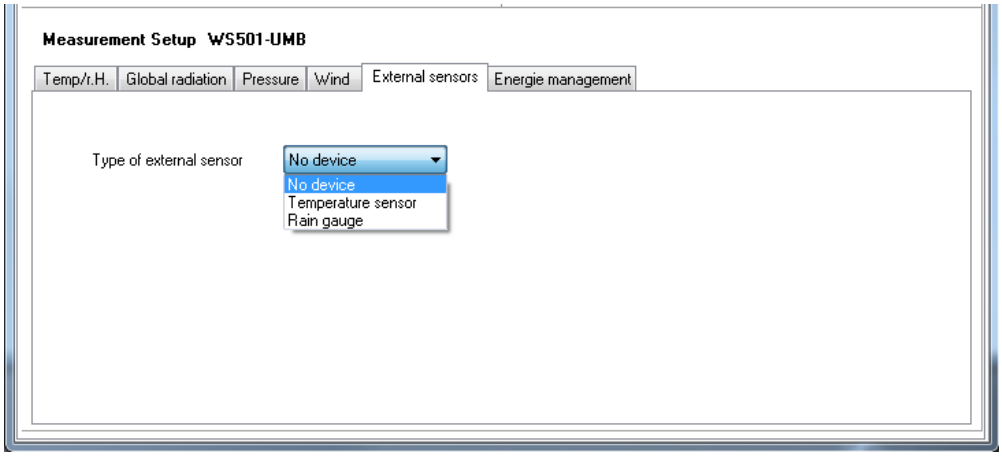

Figure 38: Setting type of external sensor

If the data from the channels of the sensor type currently not selected are requested, the device will respond with “invalid channel”.

18.1.2 External Temperature Sensor

All models of the WS family (except WS100-UMB) can be used with an external temperature sensor.

For different application various types of NTC sensor are in supply:

- WT1 for temperature acquisition of devices and surfaces
- WST1 for mounting in the road surface (road surface temperature)

Mounting / installation of the temperature sensors is shown in the sensor manual.

18.1.3 External Rain Gauge

All models of the WS family without integrated precipitation detection can be used with an external rain gauge. Models WS100-UMB, WS400-UMB, WS600-UMB, WS401-UMB, WS601-UMB, WS700-UMB, WS800-UMB with R2S sensor resp. integrated tipping bucket **cannot** be equipped with an external rain gauge.

The measurement values of the external rain gauge are on the same channels as the data of the internal precipitation sensors of WS100-UMB, WS400-UMB, WS600-UMB, WS401-UMB, WS601-UMB, WS700-UMB and WS800-UMB.

The external rain gauge WTB100 uses the same technology as the integrated rain gauge of models WS401-UMB and WS601-UMB.

The resolution of the rain gauge WTB100 can be modified by the reduction ring delivered with the sensor from 0.2mm to 0.5mm.

In principle, all rain sensors with bounce-free reed contact (normally open or normally closed) and with a resolution of 0.1 mm, 0.2 mm, 0.5 mm or 1.0 mm can be used.

Note: To get the correct amount of rain this “mechanical” selection must be also be set in Smart Weather Sensors configuration.

The setting is done with the UMB Config Tool by the same procedure as with WS401-UMB and WS601-UMB (s. Chap.10.2.8).

The WS601/401-UMB’s advices for installation (Chap.7.3.4) and maintenance (Chap.12.1) are as well valid for the external rain gauge.

Example with WS501-UMB and WTB100 without reduction ring:

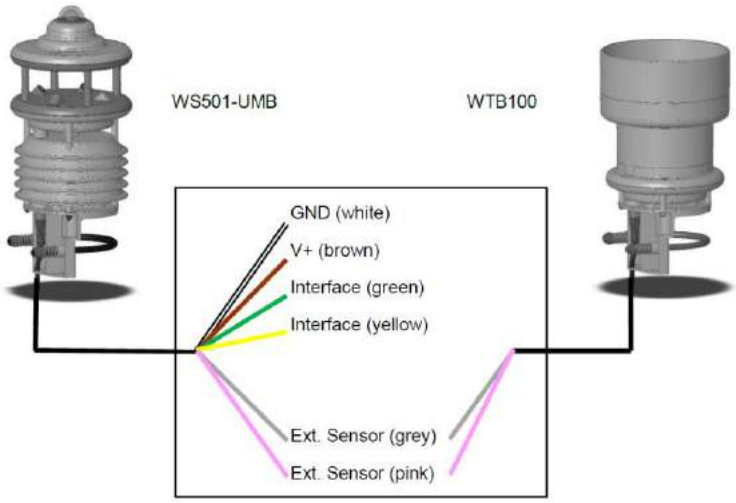

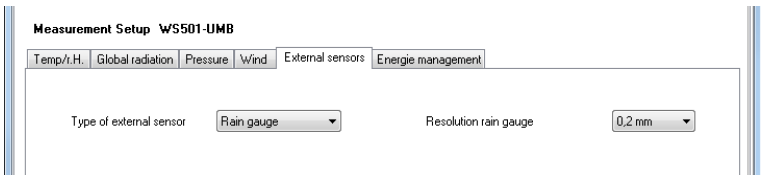

Figure 39: Example WS501-UMB and WTB100

19 Appendix

19.1 Channel List Summary

The channel assignment applies to online data requests in binary and ASCII protocol.

UMB Channel						Measuring Range		
act	**min**	**max**	**avg**	**special**	**Measurement Variable (float32)**	**min**	**max**	**unit**
Temperatures								
100	120	140	160		temperature	-50.0	60.0	°C
105	125	145	165		temperature	-58.0	140.0	°F
101					external temperature	-40.0	80.0	°C
106					external temperature	-40.0	176.0	°F
110	130	150	170		dewpoint	-50.0	60.0	°C
115	135	155	175		dewpoint	-58.0	140.0	°F
111					wind chill temperature	-60.0	70.0	°C
116					wind chill temperature	-76.0	158.0	°F
114					wet bulb temperature	-50.0	60.0	°C
119					wet bulb temperature	-58.0	140.0	°F
112					wind heater temp.	-50.0	150.0	°C
113					R2S heater temp.	-50.0	150.0	°C
117					wind heater temp.	-58.0	302.0	°F
118					R2S heater temp.	-58.0	302.0	°F
Humidity								
200	220	240	260		relative humidity	0.0	100.0	%
205	225	245	265		absolute humidity	0.0	1000.0	g/m³
210	230	250	270		mixing ratio	0.0	1000.0	g/kg
Enthalpy								
215					specific enthalpy	-100.0	1000.0	kJ/kg
Pressure								
300	320	340	360		abs. air pressure	300	1200	hPa
305	325	345	365		rel. air pressure	300	1200	hPa
Air Density								
310					air density	0.0	3.0	kg/m³
Wind								
				vect. avg				
400	420	440	460	480	wind speed	0	75.0	m/s
405	425	445	465	485	wind speed	0	270.0	km/h
410	430	450	470	490	wind speed	0	167.8	mph
415	435	455	475	495	wind speed	0	145.8	kts
401					wind speed fast	0	75.0	m/s
406					wind speed fast	0	270.0	km/h
411					wind speed fast	0	167.8	mph
416					wind speed fast	0	145.8	kts
403					wind speed standard deviation	0	75.0	m/s
413					wind speed standard deviation	0	167.8	mph
500	520	540		580	wind direction	0	359.9	°
501					wind direction fast	0	359.9	°
502					wind direction corr.	0	359,9	°
503					wind direction standard deviation	0	359.0	°
805					wind value quality	0	100.0	%
806					wind value quality (fast)	0	100.0	%
Compass								
510					compass heading	0	359	°

Precipitation Quantity			Range	Unit
600	float32	Precipitation Quantity - Absolute	0 … 100000	liters/m²
620	float32	Precipitation Quantity - Absolute	0 … 100000	mm
640	float32	Precipitation Quantity - Absolute	0 … 3937	inches
660	float32	Precipitation Quantity - Absolute	0 … 3937008	mil
605	float32	Precipitation Quantity - Differential	0 … 100000	liters/m²
625	float32	Precipitation Quantity - Differential	0 … 100000	mm
645	float32	Precipitation Quantity - Differential	0 … 3937	inches
665	float32	Precipitation Quantity - Differential	0 … 3937008	mil
Precipitation Type				
700	uint7	Precipitation Type	0 = No precipitation 40 = unspecified precipitation 60 = Liquid precipitation, e.g. rain 70 = Solid precipitation, e.g. snow **WS100-UMB only:** 67 = freezing rain 69 = sleet 90 = hail	
Precipitation Intensity			**Range**	**unit**
800	float32	Precipitation Intensity	0 … 200.0	l/m²/h
820	float32	Precipitation Intensity	0 … 200.0	mm/h
840	float32	Precipitation Intensity	0 … 7.874	in/h
860	float32	Precipitation Intensity	0 … 7874	mil/h

Global Radiation								
act	**min**	**max**	**avg**	**special**	**Measurement Variable (float32)**	**min**	**max**	**unit**
900	920	940	960		Global Radiation	0	1400	W/m²
Lightning Detection								
act	**min**	**max**	**avg**	**sum**	**Measurement Variable (uint16)**	**min**	**max**	**unit**
617					Lightning event (minute)	0	255	-
				677	Lightning event (interval)	0	7650	-
Service Channels								
10000					Supply Voltage V	0.0	50.0	V
11000					Rain Drop Volume µl	0.0	500.0	µl
4100	4120	4140	4160		temperature	-50.0	60.0	°C
4105	4125	4145	4165		temperature	-58.0	140.0	°F
4600					Precipitation: total particles	0	4294967295	-
4601					Precipitation: total drops	0	4294967295	-
4602					Precipitation: drizzle particles	0	65535	-
4603					Precipitation: snow particles	0	65535	-
4604					Precipitation: hail particles	0	65535	-
4620					Precipitation: Drop class 0	0	65535	-
4621					Precipitation: Drop class 1	0	65535	-
4622					Precipitation: Drop class 2	0	65535	-
4623					Precipitation: Drop class 3	0	65535	-
4624					Precipitation: Drop class 4	0	65535	-
4625					Precipitation: Drop class 5	0	65535	-
4626					Precipitation: Drop class 6	0	65535	-
4627					Precipitation: Drop class 7	0	65535	-
4628					Precipitation: Drop class 8	0	65535	-
4629					Precipitation: Drop class 9	0	65535	-
4630					Precipitation: Drop class 10	0	65535	-
4631					Precipitation: Drop class 11	0	65535	-

Note: Which channels are actually available depends on the WSxxx-UMB type in use.

19.2 Channel List Summary per TLS2002 FG3

The following channels are available specifically for data requests for further processing in TLS format. These channels are only available in the UMB-Binary protocol.

DE Type	UMB Channel	Meaning	Format	Range	Resolution	Coding
48	1048	Result message Air Temperature LT	16 bit	-30 ... +60°C	0.1°C	60.0 = 600d = 0258h 0.0 = 0d = 0000h -0.1 = -1d = FFFFh -30.0 = -300d = FED4h
53	1053	Result message Precipitation Intensity NI	16 bit	0 ... 200 mm/h	0.1 mm/h	0.0 = 0d = 0000h 200.0 = 2000d = 07D0h
54	1054	Result message Air Pressure LD	16 bit	800...1200 hPa	1 hPa	800 = 800d = 0320h 1200 = 1200d = 04B0h
55	1055	Result message Relative Humidity RLF	8 bit	10% ... 100%	1% RH	10% = 10d = 0Ah 100% = 100d = 64h
56	1056	Result message Wind Direction WR	16 bit	0 ... 359°	1°	0° (N) = 0d = 0000h 90° (O) = 90d = 005Ah 180° (S) = 180d = 00B4h 270° (W) = 270d = 010Eh FFFFh = not definable
57	1057	Result message Wind Speed. (average) WGM	16 bit	0.0 ... 60.0 m/s	0.1 m/s	0.0 = 0d = 0000h 60.0 = 600d = 0258h
64	1064	Result message Wind Speed (peak) WGS	16 bit	0.0 ... 60.0 m/s	0.1 m/s	0.0 = 0d = 0000h 60.0 = 600d = 0258h
66	1066	Result message Dewpoint Temperature TPT	16 bit	-30 ... +60°C	0.1°C	60.0 = 600d = 0258h 0.0 = 0d = 0000h -0.1 = -1d = FFFFh -30.0 = -300d = FED4h
71	1071	Result message Precipitation Type NS	8 bit			0 = No precipitation 40 = unspecified precipitation 60 = Liquid precipitation, e.g. rain 70 = Solid precipitation, e.g. snow **WS100-UMB only**: 67 = freezing rain 69 = sleet 90 = hail

Note: Which channels are actually available depends on the WSxxx-UMB type in use.

The previous channels 1153 and 1253 are no longer supported. Channels 840 and 860 can be used in their place.

19.3 Communication in Binary Protocol

Only one example of an online data request is described in this operating manual. Please refer to the current version of the UMB Protocol for all commands and the exact mode of operation of the protocol (available for download at www.lufft.com).

Note: Communication with the sensor takes place in accordance with the master-slave principle, i.e. there may only be ONE requesting unit on a network.

19.3.1 Framing

The data frame is constructed as follows:

1	2	3 - 4	5 - 6	7	8	9	10	11 ... (8 + len) optional	9 + len	10 + len 11 + len	12 + len
SOH	<ver>	<to>	<from>	<len>	STX	<cmd>	<verc>	<payload>	ETX	<cs>	EOT

SOH	Control character for the start of a frame (01h); 1 byte
<ver>	Header version number, e.g.: V 1.0 →<ver> = 10h = 16d; 1 byte
<to>	Receiver address; 2 bytes
<from>	Sender address; 2 bytes
<len>	Number of data bytes between STX and ETX; 1 byte
STX	Control character for the start of payload transmission (02h); 1 byte
<cmd>	Command; 1 byte
<verc>	Version number of the command; 1 byte
<payload>	Data bytes; 0 – 210 bytes
ETX	Control character for the end of payload transmission (03h); 1 byte
<cs>	Check sum, 16 bit CRC; 2 bytes
EOT	Control character for the end of the frame (04h); 1 byte

Control characters: SOH (01h), STX (02h), ETX (03h), EOT (04h).

19.3.2 Addressing with Class and Device ID

Addressing takes place by way of a 16 bit address. This breaks down into a Class ID and a Device ID.

Address (2 bytes = 16 bit)				
Bits 15 – 12 (upper 4 bits)		**Bits 11 – 8 (middle 4 bits)**	**Bits 7 – 0 (lower 8 bits)**	
Class ID (0 to 15)		**Reserve**	**Device ID** (0 – 255)	
0	Broadcast		0	Broadcast
7	Smart Weather Sensor (WS200-UMB – WS600-UMB)		1 - 255	Available
15	Master or control devices			

ID = 0 is provided as broadcast for classes and devices. Thus it is possible to transmit a broadcast on a specific class. However this only makes sense if there is only one device of this class on the bus; or in the case of a command, e.g. reset.

19.3.3 Examples for Creating Addresses

If, for example, you want to address WS400-UMB with the device ID 001, this takes place as follows:

The class ID for the Smart Weather Sensor is 7d = 7h;
the device ID is e.g. 001d = 001h

Putting the class and device IDs together gives the address 7001h (28673d).

19.3.4 Example of a Binary Protocol Request

If, for example, a Smart Weather Sensor with the device ID 001 is to be polled from a PC for the current temperature, this takes place as follows:

Sensor:

The class ID for the Smart Weather Sensors 7 = 7h;

The device ID is 001 = 001h

Putting the class and device IDs together gives a target address of 7001h.

PC:

The class ID for the PC (master unit) is 15 = Fh;
the PC ID is e.g. 001d = 01h.

Putting the class and device IDs together gives a sender address of F001h.

The length <len> for the online data request command is 4d = 04h;

The command for the online data request is 23h;

The version number of the command is 1.0 = 10h.

The channel number is in <payload>; as can be seen from the channel list (page 69), the current temperature in °C in the channel is 100d = 0064h.

The calculated CRC is D961h.

The request to the device:

SOH	<ver>	<to>		<from>		<len>	STX	<cmd>	<verc>	<channel>		ETX	<cs>		EOT
1	**2**	**3**	**4**	**5**	**6**	**7**	**8**	**9**	**10**	**11**	**12**	**13**	**14**	**15**	**16**
01h	10h	01h	70h	01h	F0h	04h	02h	23h	10h	64h	00h	03h	61h	D9h	04h

The response from the device:

SOH	<ver>	<to>		<from>		<len>	STX	<cmd>	<verc>	<status>	<channel>		<typ>
1	**2**	**3**	**4**	**5**	**6**	**7**	**8**	**9**	**10**	**11**	**12**	**13**	**14**
01h	10h	01h	F0h	01h	70h	0Ah	02h	23h	10h	00h	64h	00h	16h

<value>				ETX	<cs>		EOT
15	**16**	**17**	**18**	**19**	**20**	**21**	**22**
00h	00h	B4h	41h	03h	C6h	22h	04h

Interpretation of the response:

<status> = 00h device o.k. (≠ 00h signifies error code; see page 74)

<typ> = Data type of the following value; 16h = float (4 bytes, IEEE format)

<value> = 41B40000h as a float value corresponds to 22.5

The temperature is therefore 22.5°C.

The correct data transmission can be checked with the aid of the check sum (22C6h).

Note: Little Endian (Intel, low byte first) applies when transmitting word and float variables of addresses or the CRC, for example. This means first the LowByte and then the HighByte.

19.3.5 Status and Error Codes in Binary Protocol

If a measurement request delivers the <status> 00h, the sensor is working correctly. You can find a complete list of additional codes in the description of the UMB protocol.

Extract from list:

<status>	Description
00h (0d)	Command successful; no error; all o.k.
10h (16d)	Unknown command; not supported by this device
11h (17d)	Invalid parameter
24h (36d)	Invalid channel
28h (40d)	Device not ready; e.g. initialization / calibration running
50h (80d)	Measurement variable (+offset) is outside the set display range
51h (81d)	
52h (82d)	Measurement value (physical) is outside the measuring range (e.g. ADC over range)
53h (83d)	
54h (84d)	Error in measurement data or no valid data available
55h (85d)	Device / sensor is unable to execute valid measurement due to ambient conditions

19.3.6 CRC Calculation

CRC is calculated according to the following rules:

Norm: CRC-CCITT

Polynomial: 1021h = $x^{16} + x^{12} + x^5 + 1$ (LSB first mode)

Start value: FFFFh

You can find further information in the description of a CRC calculation in UMB Protocol.

19.3.7 Data Request in Power Saving Mode 2

When in power saving mode2 the processor of the Smart Weather Sensor will be usually in sleep state. For the acquisition of measurement data a certain command sequence and a certain timing is required:

- „Wake Up“ bei sending a <Break>, any character or any telegram (a telegram will not be properly detected and get no response, because the UART is just starting)
- 1000msec pause for the processor start up
- Activation of the measurement cycle by (any) valid telegram addressed to this device
- 2000msec pause for the execution of the measurement sequence
- Request of the measurement results

Example of a Request Sequence:

```
Command Data Request (0x23), Channel 100
      No response
Wait 1 sec
Command Data Request (0x23), Channel 100
      Discard data
Wait 2 sec
CommandMultiData Request (0x2F), Ch. 100, 200, 300, 620, 605, 700
      Store data
```

19.4 Communication in ASCII Protocol

Note: UMB-ASCII protocol is not recommended for new projects. New features and sensors will not be implemented for this protocol for devices newer than device version 223 (WS100-UMB device version 04).

Text-based communication with devices is possible using ASCII protocol.

To do this, in the device configuration, interface settings, the protocol mode must be set to ASCII (see page 33).

ASCII protocol is network-compatible and serves exclusively for online data requests. The device will not respond to incomprehensible ASCII commands.

Note: The use of binary protocol is recommended for lengthy transmission routes (e.g. network, GPRS/UMTS), as ASCII protocol is unable to detect transmission errors (not CRC-secured).

Note: TLS channels are not available in ASCII protocol.

19.4.1 Structure

An ASCII command is introduced by the '&' character and completed by the CR (0Dh) sign. There is a space character (20h) between the individual blocks in each case; this is represented by an underscore character '_'. Characters that represent an ASCII value are in ordinary inverted commas.

19.4.2 Summary of ASCII Commands

Command	Function	BC	AZ
M	Online data request		l
X	Switches to binary protocol		k
R	Triggers software reset	●	k
D	Software reset with delay	●	k
I	Device information		k

These operating instructions describe the online data request only. You can find the description of the other commands in the UMB protocol.

19.4.3 Online Data Request (M)

Description: By way of this command, a measurement value is requested from a specific channel.

Request: '&'_<ID>[5]_'M'_<channel>[5] CR

Response: '$'_<ID>[5]_'M'_<channel>[5]_<value>[5] CR

<ID>[5] Device address (5 decimal places with leading zeros)

<channel>[5] Indicates the channel number (5 decimal places with leading zeros)

<value>[5] Measurement value (5 decimal places with leading zeros); a measurement value standardized to 0 – 65520d. Various error codes are defined from 65521d – 65535d.

Example:

Request: &_28673_M_00100

By way of this request, channel 100 of the device with address 28673 is interrogated (Smart Weather Sensor with device ID 001).

Response: $_28673_M_00100_34785

This channel outputs a temperature from –50 to +60°C, which is calculated as follows:

0d	corresponds to	-50°C
65520d	corresponds to	+60°C
36789d	corresponds to	[+60°C – (-50°C)] / 65520 * 34785 +(-50°C) = 8.4°C

Note: TLS channels are not available in ASCII protocol.

19.4.4 Standardization of Measurement Values in ASCII Protocol

The standardization of measurement values from 0d – 65520d corresponds to the measuring range of the respective measurement variable.

Measurement Variable	Measuring Range		
	Min	Max	Unit
Temperature			
Temperature Dew point Wet Bulb Temperature	-50.0	60.0	°C
	-58.0	140.0	°F
External Temperature	-40.0	80.0	°C
	-40.0	176.0	°F
Wind chill temperature	-60.0	70.0	°C
	-76.0	158.0	°F
Humidity			
Relative humidity	0.0	100.0	%
Absolute humidity Mixing ratio	0.0	1000.0	g/m³ g/kg
Specific Enthalpy	-100.0	1000.0	kJ/kg
Pressure			
Relative air pressure Absolute air pressure	300.0	1200.0	hPa
Air Density			
air density	0.0	3.0	kg/m³
Wind			
Wind speed	0.0	75.0	m/s
	0.0	270.0	km/h
	0.0	167.8	mph
	0.0	145.8	kts
Wind direction	0.0	359.9	°
wind value quality	0.0	100.0	%
Rain			
Quantity	0.0	6552.0	litres / m²
	0.0	6552.0	mm
	0.0	257.9	inches
	0.0	257952.7	mil
Quantity since last request	0.0	655.2	litres / m²
	0.0	655.2	mm
	0.0	25.79	inches
	0.0	25795.2	mil
Precipitation type	0 = No precipitation 40 = Precipitation 60 = Liquid precipitation, e.g. rain 70 = Solid precipitation, e.g. snow **WS100-UMB only**: 67 = freezing rain 69 = sleet 90 = hail		
Precipitation intensity	0.0	200.0	l/m²/h
	0.0	200.0	mm/h
	0.0	7.874	in/h
	0.0	7874	mil/h
Global Radiation			
Global Radiation until device version .049 / .212	0.0	1400.0	W/m²
Global Radiation from device version .050 / .213 (software version > v5.6)	**0.0**	**2000.0**	**W/m²**
Lightning Sensor			
Lightning events (min)	0	255	-
Lightning events (interval)	0	7650	-

19.4.5 Error Codes in the ASCII Protocol

Various error codes are defined from 65521d – 65535d in addition to the standardisation for the transmission of measurement values.

<code>	Description
65521d	Invalid Channel
65523d	Value Overflow
65524d	Value Underflow
65525d	Error in measurement data or no valid data available
65526d	Device / sensor is unable to execute valid measurement due to ambient conditions
65534d	Invalid Calibration
65535d	Unknown Error

19.5 Communication in Terminal Mode

It is possible to communicate with a device in a very simple text-based manner using the terminal mode.

To do this, in the device configuration, interface settings, the protocol mode must be set to terminal (see page 33).

Note: In the case of communication in the terminal mode, only one single unit may be connected to the interface, as this protocol is **NOT** network-compatible. It is used for very simple measurement value requests.

Note: The use of binary protocol is recommended for lengthy transmission routes (e.g. network, GPRS/UMTS), as it is not possible to detect transmission errors in terminal mode (not CRC-secured).

Note: In the terminal mode, measurement values are not available in all units. Furthermore, status and error messages are not transmitted.

19.5.1 Structure

A terminal consists of an ASCII character and a numeric character. The command is completed with the <CR> sign. There is no echo on entry.

The individual values in the response are separated by a semi-colon (;). The response is completed with <CR><LF>.

An invalid terminal command is acknowledged with ‘FAILED’. Control commands are acknowledged with ‘OK’.

The command to which the response relates is given at the beginning of each response.

Note: No response times are specified in the terminal mode.

19.5.2 Terminal Commands

The terminal commands transmit the following values or have the following functions:

E0<CR>	Temperature in °C	Ta	C	(Channel 100)
	Dew point temperature in °C	Tp	C	(Channel 110)
	Wind chill temperature in °C	Tw	C	(Channel 111)
	Relative humidity in %	Hr	P	(Channel 200)
	Relative air pressure in hPa	Pa	H	(Channel 305)
	Wind speed in m/s	Sa	M	(Channel 400)
	Wind direction in °	Da	D	(Channel 500)
	Precipitation quantity in mm	Ra	M	(Channel 620)
	Precipitation type	Rt	N	(Channel 700)
	Precipitation intensity in mm/h	Ri	M	(Channel 820)
E1<CR>	Temperature in °F	Ta	F	(Channel 105)
	Dew point temperature in °F	Tp	F	(Channel 115)
	Wind chill temperature in °F	Tw	F	(Channel 116)
	Relative humidity in %	Hr	P	(Channel 200)
	Relative air pressure in hPa	Pa	H	(Channel 305)
	Wind speed in mph	Sa	S	(Channel 410)
	Wind direction in °	Da	D	(Channel 500)
	Precipitation quantity in inches	Ra	I	(Channel 640)
	Precipitation type	Rt	N	(Channel 700)
	Precipitation intensity in inches/h	Ri	I	(Channel 840)
E2<CR>	Act. wind speed in m/s	Sa	M	(Channel 400)
	Min. wind speed in m/s	Sn	M	(Channel 420)
	Max. wind speed in m/s	Sx	M	(Channel 440)
	Avg. wind speed in m/s	Sg	M	(Channel 460)
	Vct. wind speed in m/s	Sv	M	(Channel 480)
	Act. wind direction in °	Da	D	(Channel 500)
	Min. wind direction in °	Dn	D	(Channel 520)
	Max. wind direction in °	Dx	D	(Channel 540)
	Vct. wind direction in °	Dv	D	(Channel 580)
E3<CR>	Act. wind speed in mph	Sa	S	(Channel 410)
	Min. wind speed in mph	Sn	S	(Channel 430)
	Max. wind speed in mph	Sx	S	(Channel 450)
	Avg. wind speed in mph	Sg	S	(Channel 470)
	Vct. wind speed in mph	Sv	S	(Channel 490)
	Act. wind direction in °	Da	D	(Channel 500)
	Min. wind direction in °	Dn	D	(Channel 520)
	Max. wind direction in °	Dx	D	(Channel 540)
	Vectorial wind direction in °	Dv	D	(Channel 580)
E4<CR>	Act. Compass heading in °	Ca	D	(Channel 510)
	Act. Global Radiation in W/m²	Ga	W	(Channel 900)
	Min. Global Radiation in W/m²	Gn	W	(Channel 920)
	Max. Global Radiation in W/m²	Gx	W	(Channel 940)
	Avg. Global Radiation in W/m²	Gg	W	(Channel 960)
	Act. Specific Enthalpy in KJ/Kg	Ea	J	(Channel 215)
	Act. Wet Bulb Temperature in °C	Ba	C	(Channel 114)
	Act. Wet Bulb Temperature in °F	Ba	F	(Channel 119)
	Act. Air Density in kg/m³	Ad	G	(Channel 310)
E5<CR>	reserved	La	X	(Channel 710)
	reserved	Lb	X	(Channel 711)
	external temperature (act) °C	Te	C	(Channel 101)
	external temperature (act) °F	Te	F	(Channel 106)
	lightning events (min)	Lm	E	(Channel 617)
	lightning events (interval)	Li	E	(Channel 677)

E9<CR>*	precipitation total particles	Tt	-	(Channel 4600)
	precipitation total drops	Td	-	(Channel 4601)
	precipitation drizzle particles	Dr	-	(Channel 4602)
	precipitation snow particles	Sn	-	(Channel 4603)
	precipitation hail particles	Ha	-	(Channel 4604)
	precipitation drop class 0	C0	-	(Channel 4620)
	precipitation drop class 1	C1	-	(Channel 4621)
	precipitation drop class 2	C2	-	(Channel 4622)
	precipitation drop class 3	C3	-	(Channel 4623)
	precipitation drop class 4	C4	-	(Channel 4624)
	precipitation drop class 5	C5	-	(Channel 4625)
	precipitation drop class 6	C6	-	(Channel 4626)
	precipitation drop class 7	C7	-	(Channel 4627)
	precipitation drop class 8	C8	-	(Channel 4628)
	precipitation drop class 9	C9	-	(Channel 4629)
	precipitation drop class 10	C10	-	(Channel 4630)
	precipitation drop class 11	C11	-	(Channel 4631)

Mx<CR>	Displays the same values as Ex<CR>, but without additional information such as the measurement variable and unit
I0<CR>	Serial number; date of manufacture; project number; parts list version; SPLAN version; hardware version; firmware version; E2 version; device version
I1<CR>	Outputs the device description
R0<CR>	Executes a device reset
R1<CR>	Resets the accumulated rain quantity and executes a device reset
X0<CR>	Temporarily switches to UMB binary protocol

*) Command E9/M9 is only supported by WS100-UMB

Examples:

E0<CR>	E0;Ta+024.9C;Tp+012.2C;Tw+026.8C;Hr+045.0P;Pa+0980.6H; Sa+005.1M;Da+156.6D;Ra+00042.24M;Rt+060N;Ri+002.6M;
M0<CR>	M0;+024.9;+012.2;+026.8;+045.0;+0980.6; +005.1;+156.6;+00042.24;+060;+002.6;
E2<CR>	E2;Sa+005.1M;Sn+001.1M;Sx+007.1M;Sg+005.1M;Sv+005.0M; Da+156.6D;Dn+166.6D;Dx+176.6D;Dv+156.6D;
M2<CR>	M2;+005.1;+001.1;+007.1;+005.1;+005.0; +156.6;+166.6;+176.6;+156.6;
I0<CR>	I0;001;0109;0701;004;005;001;016;011;00002;<CR><LF>
R0<CR>	R0;OK;<CR><LF>

19.6 Communication in SDI-12 Mode

The communication in the SDI-12 mode of the Smart Weather Sensor is conforming to the standard defined in ‚SDI-12 A Serial-Digital Interface Standard for Microprocessor-Based Sensors Version 1.3 January 12, 2009‘ . The device may be operated in bus mode together with other SDI-12 sensors, connected to one SDI master (logger).

19.6.1 Preconditions for SDI-12 Operation

As the interface settings defined in the SDI-12 standard are significantly different from the UMB default settings the related parameters have to be set properly by the UMB Config Tool (latest version!).

The protocol mode of the device has to be set to “SDI-12”. This will automatically set the baud rate to 1200.

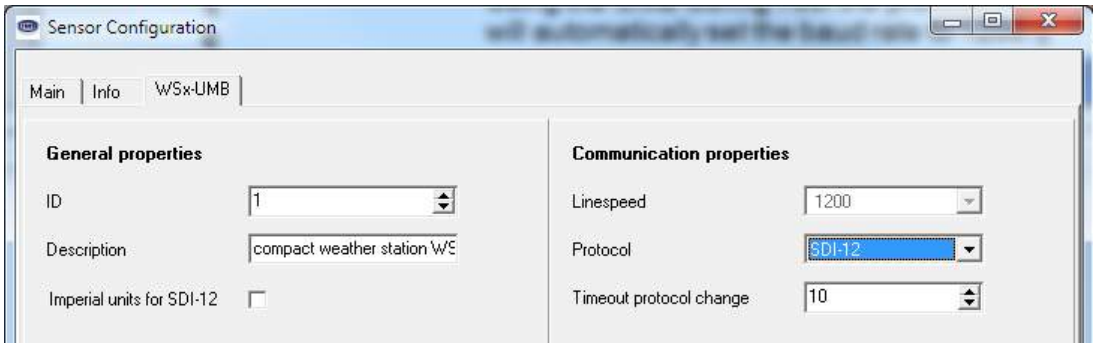

Figure 40: Sensor Configuration SDI-12

Measurement data can be transmitted alternatively in metric or US units. The selection is done by the UMB Config Tool.

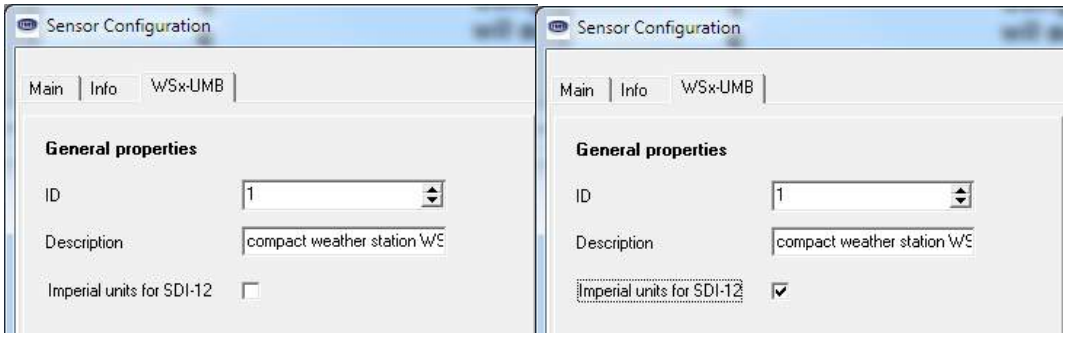

Figure 41: Sensor Configuration SDI-12 Units

Metric units US units

Note: Please observe drawings on next page and notes on page 27 when connecting a SDI12 data logger!

When operating the device in SDI-12 mode it is basically no more possible to access the device with the UMB Config Tool, due to the different interface parameter settings. To enable configuration access nevertheless the interface is operated in standard UMB mode (19200 8N1) for the first 5 seconds(*) after reset / power on. During this time the UMB device ID, if unequal 1, is set to 200, so access will be possible even if the device ID is unknown. If a valid UMB telegram is received within this 5 sec, the device will stay in UMB mode for the configured time out (several minutes) so that the configuration can be modified.

- Connect the PC to the Smart Weather Sensor through an RS-485 converter
- Start the UMB Config Tool and create a WSxxx-UMB with the address (1 or 200) of the actual device and activate at least one sensor. Start the measurement (will report connection error at first)
- Reset the device (Power off / on)
- When measurement values are received the measurement can be terminated, the interface is now open for configuration.

(*) Remark: The 5 seconds UMB communication are available from program start. Under consideration of the operating system start, where no communication is possible, the device will be ready for SDI12 requests after 7.0 – 7.5 seconds.

This timing only applies in case of cold start after power on or reset. This phase will not occur after “wake up” in Power Saving Mode 2. In this case the device will respond within the time defined by the SDI12 standard.

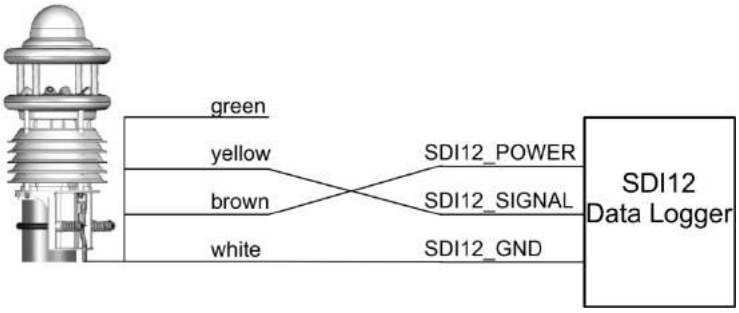

Figure. 42: Connecting to a logger with integrated power supply

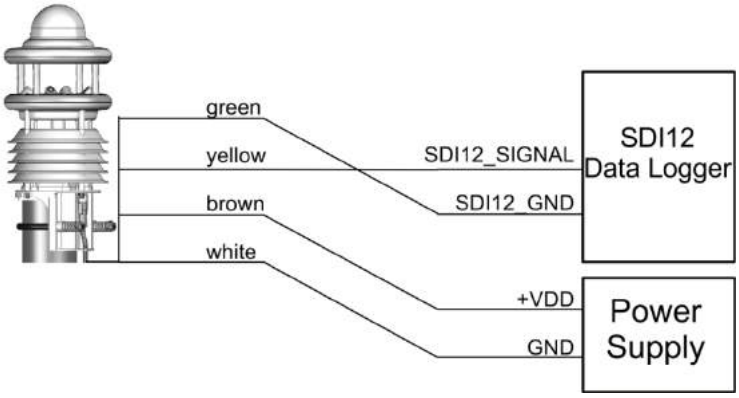

Figure. 43: Connecting to a logger and a separate power supply **up to device version 41**

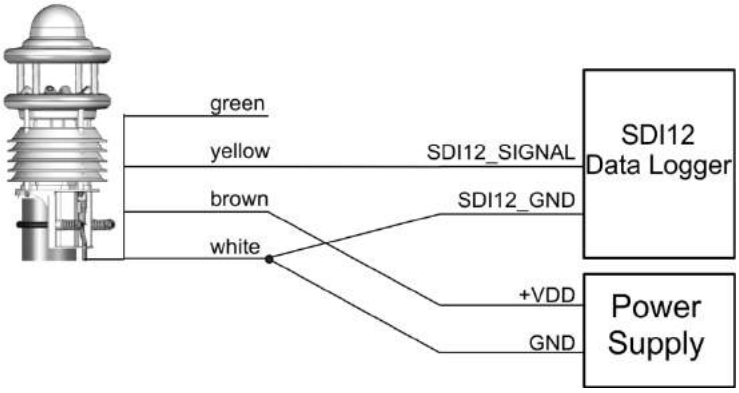

Figure. 44: Connecting to a logger and a separate power supply **device version 42 and newer**

19.6.2 Command Set

For details of the SDI-12 protocol please refer to the above mentioned standard document.

Following commands are available for devices of the WS family:

Note: The examples in the following sections use italics to print the requests from the logger (*0V!*)

Command	Function
?!	Address search (Wildcard request, one device only on bus!)
a!	Request device active?
aI!	Request device identification
aAb!	Address change to b (0 … 9, A …Z, a … z)
aM!	Measurement basic minimal data set
aM1!	Measurement temperatures
aM2!	Measurement humidity
aM3!	Measurement air pressure
aM4!	Measurement wind
aM5!	Measurement compass
aM6!	Measurement precipitation
aM7!	Measurement global radiation
aM8!	Measurement external temperature
aMC!	Measurement, basic minimal data set, transmit values with CRC
aMC1! ... aMC8!	Measurement (assignment of values as for aMn! commands), transmit values with CRC
aC!	Concurrent measurement, full basic data set
aC1! ... aC8!	Concurrent measurement, assignment of values as for aMn! commands, partly extended data sets
aCC!	Concurrent measurement, transmit values with CRC
aCC1! ... aCC8!	Concurrent measurement, assignment of values as for aMn! commands, partly extended data sets, transmit values with CRC
aD0!	Data request buffer 0
aD1!	Data request buffer 1
aD2!	Data request buffer 2
aD3!	Data request buffer 3
aD4!	Data request buffer 4
aR0!	Data request from continuous measurement, data set 0
aR1!	Data request from continuous measurement, data set 1
aR2!	Data request from continuous measurement, data set 2
aR3!	Data request from continuous measurement, data set 3
aR4!	Data request from continuous measurement, data set 4
aRC0!	Data request from continuous measurement, data set 0 with CRC
aRC1!	Data request from continuous measurement, data set 1 with CRC
aRC2!	Data request from continuous measurement, data set 2 with CRC
aRC3!	Data request from continuous measurement, data set 3 with CRC
aRC4!	Data request from continuous measurement, data set 4 with CRC
aV!	Command verification: Evaluate sensor status and heating temperatures, data request with aD0!, aD1!
aXU<m/u>!	Change the unit system for SDI data
aXH+nnnn!	Set local altitude of the device for calculation of rel. air pressure

Command	Function
aXD+nnn.n!	Set local compass deviation
aXL<n/s/w>!	Set power saving mode
aXMn!	Set the heating mode of the device
aXA<t/p/w>+nn!	Integration time for average and min/max evaluation
aXC!	Clear the abs. precipitation amount (includes a device reset)
aXR!	Device reset

The composition of the minimal and the full basic data set depends on the variant (WS100-UMB ... WS800-UMB) of the device in question (see below). The same applies to the availability of the additional measurement commands (aM1!, aC1! etc.)

Due the applied measurement processes the devices of the WS family will, different from other sensors described in the SDI-12 document, in **normal operation mode** always measure continuously. This causes some special properties while in this mode:

- The device does not need a “Wakeup” and does not have a sleep mode. So the reactions to “Break” signals and any related timings are inapplicable. “Break” will be ignored by WS devices.
- Data requested with M- or C- commands are always available immediately. The device will always respond with `a000n` resp. `a000nn`. This means the device will not send any service request and will ignore measurement abort signals. The logger should request the data immediately.
- M- and C- command only differ in the number of values made available in the buffers (in both cases the maximum permitted by the standards of 9 resp. 20).
- We recommend to use the commands for continuous measurement (R-commands) to request the data.
- When in **power saving mode 2** the device will wake up by a „Break“ signal. Other functions of the „Break“ signal are not implemented.
- When in **power saving mode 2** the device responds to M or C commands with `a002n` resp. `a002nn` and holds the data available within 2 seconds. It will not send a service request, signals to abort the measurement are ignored.
- For the reduced data set in power saving mode 2 a unified data buffer structure for all device models has been defined. Depending on the individual model unused channels will be set to the “invalid” marker 999.9.

19.6.3 Address Configuration

UMB Device-ID and SDI-12 Address are connected, but the different address ranges and the fact, that UMB ID's are integer numbers, while SDI-12 addresses are ASCII characters, have to be considered.

The SDI-12 address is built from the UMB device ID as follows:

UMB Device ID 1 (default) corresponds to SDI-12 Address '0' (SDI-12 default).

Changing the SDI12 address by SDI12 setting command also modifies the UMB device ID accordingly.

Valid Address Ranges:

UMB (dec)			SDI-12 (ASCII)		
1	to	10	'0'	to	'9'
18	to	43	'A'	to	'Z'
50	to	75	'a'	to	'z'

19.6.4 Data Messages

In the interest of simplified evaluation the assignment of measurement values to data buffers '0' ... '9' has been defined unified for all measurement commands. For this reason the responses to C-requests have been restricted to 35 characters, not using the 75 characters permitted for these requests

Currently buffers '0' to '4' are in use.

As with M-requests max. 9 values may be transmitted; the base data set of 9 values has been assigned to buffers '0' and '1'. Buffers '2' to '4' contain further measurement values. This definition guaranties the compatibility to loggers designed according to older versions of the SDI-12 standard.

The buffer assignment depends on the device variant (WS100-UMB ... WS800-UMB).

The complete set of measurement values, as defined for the UMB protocol has been made available also in the SDI-12 environment. They can be accessed using the additional M and C commands (aM1! ... aM8!, aMC1! ... aMC8!, aC1! ... aC8!, aCC1! ... aCC8!) (see below).

If the measurement value is not available for some reason, e.g. sensor failure, this is indicated by a value of +999.0. or -999.9 The logger can then evaluate the reason of failure by a aV! Verification request. The following tables show the measurement values in the sequence they are arranged in the telegram (see example).

Depending on the configuration of the device the values will be transmitted in metric or US units.

Note: The configured system of units is not indicated in the data messages. The logger may request this setting with the I-command and adjust the evaluation of the data messages accordingly

Example: M Request from a WS600-UMB

0M!

`00009<CR><LF>` 9 measurement values are available

0D0!

`0+13.5+85.7+1017.0+2.5+3.7<CR><LF>`

Air temperature 13.5°C, rel. humidity 85.7%, rel. air pressure 1017hPa
avg. wind speed 2.5m/s, max wind speed 3.7m/s.

0D1!

`0+43.7+9.8+60+4.4<CR><LF>`

Wind direction 43.7° wet bulb temperature 9.8°C,
type of precipitation 60 (rain), precipitation intensity 4.4mm/h

Example: C Request from a WS600-UMB

0M!

`000020<CR><LF>` 20 measurement values are available

0D0!

`0+13.5+85.7+1017+2.5+3.7<CR><LF>`

air temperature 13.5°C, rel. humidity 85.7%, rel. air pressure 1017hPa
avg. wind speed 2.5m/s, max wind speed 3.7m/s.

0D1!

`0+43.7+9.8+60+4.4<CR><LF>`

wind direction 43.7° wet bulb temperature 9.8°C,
type of precipitation 60 (rain), precipitation intensity 4.4mm/h

0D2!

`0+11.2+10.3+1.10<CR><LF>`

dewpoint 11.2°C, wind chill temperature 10,3°C
diff. precipitation 1.10mm

0D3!

`0+3.2+0.0+3.5+100.0<CR><LF>`

act. wind speed 3,2m/s, min. wind speed 0.0 m/s
vect. avg. wind speed 3.5m/s, quality of wind values 100%

0D4!

`0+43.7+41.3+45.7+29.3<CR><LF>`

act. wind direction 43,7°, min. wind direction 41,3°,
max. wind direction 45,7°, specific enthalpy29,3kJ/kg

19.6.4.1 Buffer assignment Basic Data Set WS600-UMB / WS700-UMB / WS800-UMB

Device configured for measurement values in metric units:

Measurement value	UMB Channel	Min	Max	Unit
Buffer ‘0’				
Air temperature (act)	100	-50.0	60.0	°C
Rel. Humidity (act)	200	0.0	100.0	%
Rel. Air Pressure	305	300.0	1200.0	hPa
Wind Speed (avg)	460	0.0	75.0	m/s
Wind Speed (max)	440	0.0	75.0	m/s
Buffer ‘1’				
Wind Direction (vct)	580	0.0	359.9	°
Wet Bulb Temperature (act)	114	-50.0	60.0	°C
Precipitation Type	700	0, 60, 70		
Precipitation Intensity	820	0.0	200.0	mm/h
Buffer ‘2’				
Dew Point (act)	110	-50.0	60.0	°C
Wind chill Temperature (act)	111	-60.0	70.0	°C
Amount of Precip. difference	625	0.00	100000.00	mm
Buffer ‘3’				
Wind Speed (act)	400	0.0	75.0	m/s
Wind Speed (min)	420	0.0	75.0	m/s
Wind Speed (vct)	480	0.0	75.0	m/s
Wind Quality	805	0.0	100.0	%
Buffer ‘4’				
Wind Direction (act)	500	0.0	359.9	°
Wind Direction (min)	520	0.0	359.9	°
Wind Direction (max)	540	0.0	359.9	°
Specific Enthalpy (act)	215	-100.0	1000.0	kJ/kg

Example: Request Buffer ‘0’

0D0!

0+13.5+85.7+2.5+3.7<CR><LF>

Air Temperature 13.5°C, rel. Humidity 85.7%, average wind speed 2.5m/s, peak wind speed 3.7m/s

Device configured for measurement values in US units:

Measurement Value	UMB Channel	Min	Max	Unit
Buffer ‘0’				
Air Temperature (act)	105	-58.0	140.0	°F
Rel. Humidity (act)	200	0.0	100.0	%
Rel. Air Pressure	305	300.0	1200.0	hPa
Wind Speed (avg)	470	0.0	167.8	mph
Wind Speed (max)	450	0.0	167.8	mph
Buffer ‘1’				
Wind Direction (vct)	580	0.0	359.9	°
Wet Bulb Temperature (act)	119	-58.0	140.0	°F
Precipitation Type	700	0, 60, 70		
Precipitation Intensity	840	0.000	7.874	in/h
Buffer ‘2’				
Dew Point (act)	115	-58.0	140.0	°F
Wind chill Temperature (act)	116	-76.0	158.0	°F
Amount of Precip. difference	645	0.0000	3937.0000	in
Buffer ‘3’				
Wind Speed (act)	410	0.0	167.8	mph
Wind Speed (min)	430	0.0	167.8	mph
Wind Speed (vct)	490	0.0	167.8	mph
Wind Quality	805	0.0	100.0	%
Buffer ‘4’				
Wind Direction(act)	500	0.0	359.9	°
Wind Direction (min)	520	0.0	359.9	°
Wind Direction (max)	540	0.0	359.9	°
Specific Enthalpy (act)	215	-100.0	1000.0	kJ/kg

19.6.4.2 Buffer Assignment Basic Data Set WS500-UMB

Device configured for measurement values in metric units:

Measurement value	UMB Channel	Min	Max	Unit
Buffer ‘0’				
Air temperature (act)	100	-50.0	60.0	°C
Rel. Humidity (act)	200	0.0	100.0	%
Rel. Air Pressure	305	300.0	1200.0	hPa
Wind Speed (avg)	460	0.0	75.0	m/s
Wind Speed (max)	440	0.0	75.0	m/s
Buffer ‘1’				
Wind Direction (vct)	580	0.0	359.9	°
Wet Bulb Temperature (act)	114	0.0	359.9	°C
Dew Point (act)	110	-50.0	60.0	°C
Wind chill Temperature (act)	111	-60.0	70.0	°C
Buffer ‘2’				
Wind Speed (act)	400	0.0	75.0	m/s
Wind Speed (min)	420	0.0	75.0	m/s
Wind Speed (vct)	480	0.0	75.0	m/s
Wind Quality	805	0.0	100.0	%
Buffer ‘3’				
Wind Direction (act)	500	0.0	359.9	°
Wind Direction (min)	520	0.0	359.9	°
Wind Direction (max)	540	0.0	359.9	°
Specific Enthalpy (act)	215	-100.0	1000.0	kJ/kg

Example: Request Buffer ‘0’

0D0!

0+13.5+85.7+2.5+3.7<CR><LF>

Air Temperature 13.5°C, rel. Humidity 85.7%, average wind speed 2.5m/s, peak wind speed 3.7m/s

Device configured for measurement values in US units:

Measurement Value	UMB Channel	Min	Max	Unit
Buffer ‘0’				
Air Temperature (act)	105	-58.0	140.0	°F
Rel. Humidity (act)	200	0.0	100.0	%
Rel. Air Pressure	305	300.0	1200.0	hPa
Wind Speed (avg)	470	0.0	167.8	mph
Wind Speed (max)	450	0.0	167.8	mph
Buffer ‘1’				
Wind Direction (vct)	580	0.0	359.9	°
Wet Bulb Temperature (act)	119	-58.0	140.0	°F
Dew Point (act)	115	-58.0	140.0	°F
Wind chill Temperature (act)	116	-76.0	158.0	°F
Buffer ‘2’				
Wind Speed (act)	410	0.0	167.8	mph
Wind Speed (min)	430	0.0	167.8	mph
Wind Speed (vct)	490	0.0	167.8	mph
Wind Quality	805	0.0	100.0	%
Buffer ‘3’				
Wind Direction(act)	500	0.0	359.9	°
Wind Direction (min)	520	0.0	359.9	°
Wind Direction (max)	540	0.0	359.9	°
Specific Enthalpy (act)	215	-100.0	1000.0	kJ/kg

19.6.4.3 Buffer Assignment Basic Data Set WS400-UMB

Device configured for measurement in metric units:

Measurement Value	UMB Channel	Min	Max	Unit
Buffer ‘0’				
Air Temperature (act)	100	-50.0	60.0	°C
Rel. Humidity (act)	200	0.0	100,0	%
Dew Point (act)	110	-50.0	60.0	°C
Abs. Air Pressure(act)	300	300.0	1200.0	hPa
Rel. Air Pressure (act)	305	300.0	1200.0	hPa
Buffer ‘1’				
Precipitation Type	700	0, 60, 70		
Precipitation Intensity	820	0.0	200.0	mm/h
Amount of Precip. Difference	625	0.00	100000.00	mm
Amount of Precip. Absolute	620	0.0	100000.0	mm
Buffer ‘2’				
Air Temperature (min)	120	-50.0	60.0	°C
Air Temperature (max)	140	-50.0	60.0	°C
Air Temperature (avg)	160	-50.0	60.0	°C
Rel. Humidity (min)	220	0.0	100.0	%
Rel. Humidity (max)	240	0.0	100.0	%
Buffer ‘3’				
Rel. Humidity (avg)	260	0.0	100.0	%
Rel. Air Pressure(min)	325	300.0	1200.0	hPa
Rel. Rel. Humidity (max)	345	300.0	1200.0	hPa
Rel. Rel. Humidity (avg)	365	300.0	1200.0	hPa
Wet Bulb Temperature (act)	114	-50.0	60.0	°C
Specific Enthalpy (act)	215	-100.0	1000.0	kJ/kg

Example: Request Buffer ‘0’

0D0!

`0+13.5+85.7+11.2+1017.0+1001.0`

Air temperature 13.5°C, rel. humidity 85.7%, dew point 11.2°C, rel. air pressure 1017.0hPa, abs. pressure 1001.0hPa

Device configured for measurement in US units:

Measurement Value	UMB Channel	Min	Max	Unit
Buffer ‘0’				
Air Temperature (act)	105	-58.0	140.0	°F
Rel. Humidity (act)	200	0.0	100.0	%
Dew Point (act)	115	-58.0	14.0	°F
Abs. Air Pressure(act)	300	300.0	1200.0	hPa
Rel. Air Pressure (act)	305	300.0	1200.0	hPa
Buffer ‘1’				
Precipitation Type	700	0, 60, 70		
Precipitation Intensity	840	0.000	7.874	in/h
Amount of Precip. Difference	645	0.0000	3937.0000	in
Amount of Precip. Absolute	640	0.000	3937.000	in
Buffer ‘2’				
Air Temperature (min)	125	-58.0	140.0	°F
Air Temperature (max)	145	-58.0	140.0	°F
Air Temperature (avg)	165	-58.0	140.0	°F
Rel. Humidity (min)	220	0.0	100.0	%
Rel. Humidity (max)	240	0.0	100.0	%
Buffer ‘3’				
Rel. Humidity (avg)	260	0.0	100.0	%
Rel. Air Pressure(min)	325	300.0	1200.0	hPa
Rel. Rel. Humidity (max)	345	300.0	1200.0	hPa
Rel. Rel. Humidity (avg)	365	300.0	1200.0	hPa
Wet Bulb Temperature (act)	119	-58.0	140.0	°F
Specific Enthalpy	215	-100.0	1000.0	kJ/kg

19.6.4.4 Buffer Assignment Basic Data Set WS300-UMB

Device configured for measurement in metric units:

Measurement Value	UMB Channel	Min	Max	Unit
Buffer ‘0’				
Air Temperature (act)	100	-50.0	60.0	°C
Rel. Humidity (act)	200	0.0	100.0	%
Dew Point (act)	110	-50.0	60.0	°C
Abs. Air Pressure(act)	300	300.0	1200.0	hPa
Rel. Air Pressure (act)	305	300.0	1200.0	hPa
Buffer ‘1’				
Air Temperature (min)	120	-50.0	60.0	°C
Air Temperature (max)	140	-50.0	60.0	°C
Air Temperature (avg)	160	-50.0	60.0	°C
Rel. Humidity (avg)	260	0.0	100.0	%
Buffer ‘2’				
Rel. Humidity (min)	220	0.0	100,0	%
Rel. Humidity (max)	240	0.0	100,0	%
Rel. Air Pressure (min)	325	300.0	1200.0	hPa
Rel. Air Pressure (max)	345	300.0	1200.0	hPa
Rel. Air Pressure (avg)	365	300.0	1200.0	hPa
Buffer ‘3’				
Abs. Humidity (min)	225	0.0	1000.0	g/m³
Abs. Humidity (max)	245	0.0	1000.0	g/m³
Abs. Humidity (avg)	265	0.0	1000.0	g/m³
Buffer ‘4’				
Wet Bulb Temperature (act)	114	-50.0	60.0	°C
Specific Enthalpy (act)	215	-100.0	1000.0	kJ/kg

Example: Request buffer ‘0’

0D0!

`0+13.5+85.7+11.2+1017.0+1001.0`

Air temperature 13.5°C, rel. humidity 85.7%, dew point 11.2°C, rel. air pressure 1017.0hPa, abs. pressure 1001.0hPa

Device configured for measurement in US units:

Measurement Value	UMB Channel	Min	Max	Unit
Buffer ‘0’				
Air Temperature (act)	105	-58.0	140.0	°F
Rel. Humidity (act)	200	0.0	100.0	%
Dew Point (act)	115	-58.0	140.0	°F
Abs. Air Pressure(act)	300	300.0	1200.0	hPa
Rel. Air Pressure (act)	305	300.0	1200.0	hPa
Buffer ‘1’				
Air Temperature (min)	125	-58.0	140.0	°F
Air Temperature (max)	145	-58.0	140.0	°F
Air Temperature (avg)	165	-58.0	140.0	°F
Rel. Humidity (avg)	260	0.0	100.0	%
Buffer ‘2’				
Rel. Humidity (min)	220	0.0	100,0	%
Rel. Humidity (max)	240	0.0	100,0	%
Rel. Air Pressure (min)	325	300.0	1200.0	hPa
Rel. Air Pressure (max)	345	300.0	1200.0	hPa
Rel. Air Pressure (avg)	365	300.0	1200.0	hPa
Buffer ‘3’				
Abs. Humidity (min)	225	0.0	1000.0	g/m³
Abs. Humidity (max)	245	0.0	1000.0	g/m³
Abs. Humidity (avg)	265	0.0	1000.0	g/m³
Buffer ‘4’				
Wet Bulb Temperature (act)	119	-58.0	140.0	°F
Specific Enthalpy (act)	215	-100.0	1000.0	kJ/kg

19.6.4.5 Buffer Assignment Basic Data Set WS200-UMB

Device configured for measurement values in metric units:

Measurement Value	UMB Channel	Min	Max	Unit
Buffer ‘0’				
Wind Speed (avg)	460	0.0	75.0	m/s
Wind Speed (max)	440	0.0	75.0	m/s
Wind Direction (vct)	580	0.0	359.9	°
Wind Direction (act)	500	0.0	359.9	°
Compass Heading(act)	510	0.0	359.0	°
Buffer ‘1’				
Wind Speed (act)	400	0.0	75.0	m/s
Wind Speed (min)	420	0.0	75.0	m/s
Wind Speed (vct)	480	0.0	75.0	m/s
Wind Quality	805	0.0	100.0	%
Buffer ‘2’				
Wind Direction (min)	520	0.0	359.9	°
Wind Direction (max)	540	0.0	359.9	°
Wind Direction corr. (act)	502	0.0	359.9	°

Example: Request Buffer ‘0’

0D0!

`0+2.5+3.7+45.5+37.8+10.3<CR><LF>`

Avg. wind speed 2.5m/s, peak wind speed 3.7m/s, avg wind direction (vect.) 45.5°, wind direction (act.) 37.8°, compass heading 10.3°

Device configured for measurement values in US units:

Measurement Value	UMB Channel	Min	Max	Unit
Buffer ‘0’				
Wind Speed (avg)	470	0.0	167.8	mph
Wind Speed (max)	450	0.0	167.8	mph
Wind Direction (vct)	580	0.0	359.9	°
Wind Direction (act)	500	0.0	359.9	°
Compass Heading(act)	510	0.0	359.0	°
Buffer ‘1’				
Wind Speed (act)	410	0.0	167.8	mph
Wind Speed (min)	430	0.0	167.8	mph
Wind Speed (vct)	490	0.0	167.8	mph
Wind Quality	805	0.0	100.0	%
Buffer ‘2’				
Wind Direction (min)	520	0.0	359.9	°
Wind Direction (max)	540	0.0	359.9	°
Wind Direction corr. (act)	502	0.0	359.9	°

19.6.4.6 Buffer Assignment Basic Data Set WS100-UMB

Device configured for measurement values in metric units

Measurement Value	UMB Channel	Min	Max	Unit
Buffer ‘0’				
Amount of Precip. absolute	620	0,0	100000,0	mm
Amount of Precip. difference	625	0,00	100000,00	mm
Precipitation Intensity	820	0,0	200,0	mm/h
Precipitation Type	700	0, 60, 70 (67, 69, 90)*		

)* additional precipitation types: WS100-UMB only

Example: Request Buffer ‘0’

0D0!

0+23.5+0.2+3.2+60<CR><LF>

Precipitation abs. 23,5mm, precipitation difference 0,2mm, precipitation intensity 3,2mm/h, precipitation type 60 (rain)

Device configured for measurement values in US units:

Measurement Value	UMB Channel	Min	Max	Unit
Buffer ‘0’				
Amount of Precip. absolute	640	0,000	3937,000	in
Amount of Precip. difference	645	0,0000	3937,0000	in
Precipitation Intensity	840	0,000	7,874	in/h
Precipitation Type	700	0, 60, 70 (67, 69, 90)*		

)* additional precipitation types: WS100-UMB only

19.6.4.7 Buffer Assignment Basic Data Set WS501-UMB, WS502-UMB, WS503-UMB, WS504-UMB, WS510-UMB

Device configured for measurement values in metric units:

Measurement value	UMB Channel	Min	Max	Unit
Buffer ‘0’				
Air temperature (act)	100	-50.0	60.0	°C
Rel. Humidity (act)	200	0.0	100.0	%
Rel. Air Pressure	305	300.0	1200.0	hPa
Wind Speed (avg)	460	0.0	75.0	m/s
Wind Speed (max)	440	0.0	75.0	m/s
Buffer ‘1’				
Wind Direction (vct)	580	0.0	359.9	°
Global Radiation (act)	900	0.0	2000.0 *)	W/m²
Dew Point (act)	110	-50.0	60.0	°C
Wind Chill Temperature (act)	111	-60.0	70.0	°C
Buffer ‘2’				
Wind Speed (act)	400	0.0	75.0	m/s
Wind Speed (min)	420	0.0	75.0	m/s
Wind Speed (vct)	480	0.0	75.0	m/s
Wind Quality	805	0.0	100.0	%
Buffer ‘3’				
Wind Direction (act)	500	0.0	359.9	°
Wet Bulb Temperature (act)	114	-50.0	60.0	°C
Specific Enthalpy (act)	215	-100.0	1000.0	kJ/kg
Buffer ‘4’				
Global Radiation (min)	920	0.0	2000.0 *)	W/m²
Global Radiation (max)	940	0.0	2000.0 *)	W/m²
Global Radiation (avg)	960	0.0	2000.0 *)	W/m²

*) Until device version .49 / .212 / Firmware v5.6: 1400.0 W/m^2

Example: Request Buffer ‘0’

0D0!

0+13.5+85.7+2.5+3.7<CR><LF>

Air Temperature 13.5°C, rel. Humidity 85.7%, average wind speed 2.5m/s, peak wind speed 3.7m/s

Device configured for measurement values in US units:

Measurement Value	UMB Channel	Min	Max	Unit
Buffer ‘0’				
Air Temperature (act)	105	-58.0	140.0	°F
Rel. Humidity (act)	200	0.0	100.0	%
Rel. Air Pressure	305	300.0	1200.0	hPa
Wind Speed (avg)	470	0.0	167.8	mph
Wind Speed (max)	450	0.0	167.8	mph
Buffer ‘1’				
Wind Direction (vct)	580	0.0	359.9	°
Global Radiation (act)	900	0.0	2000.0 *)	W/m²
Dew Point (act)	115	-58.0	140.0	°F
Windchill Temperature (act)	116	-76.0	158.0	°F
Buffer ‘2’				
Wind Speed (act)	410	0.0	167.8	mph
Wind Speed (min)	430	0.0	167.8	mph
Wind Speed (vct)	490	0.0	167.8	mph
Wind Quality	805	0.0	100.0	%
Buffer ‘3’				
Wind Direction(act)	500	0.0	359.9	°
Wet Bulb Temperature (act)	119	-58.0	140.0	°F
Specific Enthalpy (act)	215	-100.0	1000.0	kJ/kg
Buffer ‘4’				
Global Radiation (min)	920	0.0	2000.0 *)	W/m²
Global Radiation (max)	940	0.0	2000.0 *)	W/m²
Global Radiation (avg)	960	0.0	2000.0 *)	W/m²

*) Until device version .49 / .212 / Firmware v5.6: 1400.0 W/m^2

19.6.4.8 Buffer Assignment Basic Data Set WS301-UMB, WS302-UMB, WS303-UMB, WS304-UMB, WS310-UMB

Device configured for measurement in metric units:

Measurement Value	UMB Channel	Min	Max	Unit
Buffer ‘0’				
Air Temperature (act)	100	-50.0	60.0	°C
Rel. Humidity (act)	200	0.0	100.0	%
Dew Point (act)	110	-50.0	60.0	°C
Global Radiation(act)	900	0.0	2000.0 *)	W/m²
Rel. Air Pressure (act)	305	300.0	1200.0	hPa
Buffer ‘1’				
Air Temperature (min)	120	-50.0	60.0	°C
Air Temperature (max)	140	-50.0	60.0	°C
Air Temperature (avg)	160	-50.0	60.0	°C
Rel. Humidity (avg)	260	0.0	100.0	%
Buffer ‘2’				
Rel. Humidity (min)	220	0.0	100,0	%
Rel. Humidity (max)	240	0.0	100,0	%
Rel. Air Pressure (min)	325	300.0	1200.0	hPa
Rel. Air Pressure (max)	345	300.0	1200.0	hPa
Rel. Air Pressure (avg)	365	300.0	1200.0	hPa
Buffer ‘3’				
Abs. Humidity (act)	205	0.0	1000.0	g/m³
Wet Bulb Temperature (act)	114	-50.0	60.0	°C
Specific Enthalpy (act)	215	-100.0	1000.0	kJ/kg
Buffer ‘4’				
Global Radiation (min)	920	0.0	2000.0 *)	W/m²
Global Radiation (max)	940	0.0	2000.0 *)	W/m²
Global Radiation (avg)	960	0.0	2000.0 *)	W/m²

*) Until device version .49 / .212 / Firmware v5.6: 1400.0 W/m^2

Example: Request buffer ‘0’

0D0!

`0+13.5+85.7+11.2+1017.0+780.0`

Air temperature 13.5°C, rel. humidity 85.7%, dew point 11.2°C, rel. air pressure 1017.0hPa, global radiation 780.0W/m²

Device configured for measurement in US units:

Measurement Value	UMB Channel	Min	Max	Unit
Buffer ‘0’				
Air Temperature (act)	105	-58.0	140.0	°F
Rel. Humidity (act)	200	0.0	100.0	%
Dew Point (act)	115	-58.0	140.0	°F
Global Radiation(act)	900	0.0	2000.0 *)	W/m²
Rel. Air Pressure (act)	305	300.0	1200.0	hPa
Buffer ‘1’				
Air Temperature (min)	125	-58.0	140.0	°F
Air Temperature (max)	145	-58.0	140.0	°F
Air Temperature (avg)	165	-58.0	140.0	°F
Rel. Humidity (avg)	260	0.0	100.0	%
Buffer ‘2’				
Rel. Humidity (min)	220	0.0	100,0	%
Rel. Humidity (max)	240	0.0	100,0	%
Rel. Air Pressure (min)	325	300.0	1200.0	hPa
Rel. Air Pressure (max)	345	300.0	1200.0	hPa
Rel. Air Pressure (avg)	365	300.0	1200.0	hPa
Buffer ‘3’				
Abs. Humidity (act)	205	0.0	1000.0	g/m³
Wet Bulb Temperature (act)	119	-58.0	140.0	°F
Specific Enthalpy (act)	215	-100.0	1000.0	kJ/kg
Buffer ‘4’				
Global Radiation (min)	920	0.0	2000.0 *)	W/m²
Global Radiation (max)	940	0.0	2000.0 *)	W/m²
Global Radiation (avg)	960	0.0	2000.0 *)	W/m²

*) Until device version .49 / .212 / Firmware v5.6: 1400.0 W/m^2

19.6.4.9 Buffer assignment Basic Data Set WS601-UMB

Device configured for measurement values in metric units:

Measurement value	UMB Channel	Min	Max	Unit
Buffer ‘0’				
Air temperature (act)	100	-50.0	60.0	°C
Rel. Humidity (act)	200	0.0	100.0	%
Rel. Air Pressure	305	300.0	1200.0	hPa
Wind Speed (avg)	460	0.0	75.0	m/s
Wind Speed (max)	440	0.0	75.0	m/s
Buffer ‘1’				
Wind Direction (vct)	580	0.0	359.9	°
reserved				
Precipitation Type	700	0, 40		
Precipitation Intensity	820	0.0	200.0	mm/h
Buffer ‘2’				
Dew Point (act)	110	-50.0	60.0	°C
Wind chill Temperature (act)	111	-60.0	70.0	°C
Amount of Precip. difference	625	0.00	100000.00	mm
Buffer ‘3’				
Wind Speed (act)	400	0.0	75.0	m/s
Wind Speed (min)	420	0.0	75.0	m/s
Wind Speed (vct)	480	0.0	75.0	m/s
Wet Bulb Temperature (act)	114	-50.0	60.0	°C
Buffer ‘4’				
Wind Direction (act)	500	0.0	359.9	°
Wind Direction (min)	520	0.0	359.9	°
Wind Direction (max)	540	0.0	359.9	°
Specific Enthalpy (act)	215	-100.0	1000.0	kJ/kg

Example: Request Buffer ‘0’

0D0!

0+13.5+85.7+2.5+3.7<CR><LF>

Air Temperature 13.5°C, rel. Humidity 85.7%, average wind speed 2.5m/s, peak wind speed 3.7m/s

Device configured for measurement values in US units:

Measurement Value	UMB Channel	Min	Max	Unit
Buffer ‘0’				
Air Temperature (act)	105	-58.0	140.0	°F
Rel. Humidity (act)	200	0.0	100.0	%
Rel. Air Pressure	305	300.0	1200.0	hPa
Wind Speed (avg)	470	0.0	167.8	mph
Wind Speed (max)	450	0.0	167.8	mph
Buffer ‘1’				
Wind Direction (vct)	580	0.0	359.9	°
reserved				
Precipitation Type	700	0, 40		
Precipitation Intensity	840	0.000	7.874	in/h
Buffer ‘2’				
Dew Point (act)	115	-58.0	140.0	°F
Wind chill Temperature (act)	116	-76.0	158.0	°F
Amount of Precip. difference	645	0.0000	3937.0000	in
Buffer ‘3’				
Wind Speed (act)	410	0.0	167.8	mph
Wind Speed (min)	430	0.0	167.8	mph
Wind Speed (vct)	490	0.0	167.8	mph
Wet Bulb Temperature (act)	119	-58.0	140.0	°F
Buffer ‘4’				
Wind Direction(act)	500	0.0	359.9	°
Wind Direction (min)	520	0.0	359.9	°
Wind Direction (max)	540	0.0	359.9	°
Specific Enthalpy (act)	215	-100.0	1000.0	kJ/kg

19.6.4.10 Buffer Assignment Basic Data Set WS401-UMB

Device configured for measurement in metric units:

Measurement Value	UMB Channel	Min	Max	Unit
Buffer ‘0’				
Air Temperature (act)	100	-50.0	60.0	°C
Rel. Humidity (act)	200	0.0	100,0	%
Dew Point (act)	110	-50.0	60.0	°C
reserved				
Rel. Air Pressure (act)	305	300.0	1200.0	hPa
Buffer ‘1’				
Precipitation Type	700	0, 40		
Precipitation Intensity	820	0.0	200.0	mm/h
Amount of Precip. Difference	625	0.00	100000.00	mm
Amount of Precip. Absolute	620	0.0	100000.0	mm
Buffer ‘2’				
Air Temperature (min)	120	-50.0	60.0	°C
Air Temperature (max)	140	-50.0	60.0	°C
Air Temperature (avg)	160	-50.0	60.0	°C
Rel. Humidity (min)	220	0.0	100.0	%
Rel. Humidity (max)	240	0.0	100.0	%
Buffer ‘3’				
Rel. Humidity (avg)	260	0.0	100.0	%
Rel. Air Pressure(min)	325	300.0	1200.0	hPa
Rel. Rel. Humidity (max)	345	300.0	1200.0	hPa
Rel. Rel. Humidity (avg)	365	300.0	1200.0	hPa
Wet Bulb Temperature (act)	114	-50.0	60.0	°C
Specific Enthalpy (act)	215	-100.0	1000.0	kJ/kg

Example: Request Buffer ‘0’

0D0!

`0+13.5+85.7+11.2+1017.0+1001.0`

Air temperature 13.5°C, rel. humidity 85.7%, dew point 11.2°C, rel. air pressure 1017.0hPa, abs. pressure 1001.0hPa

Device configured for measurement in US units:

Measurement Value	UMB Channel	Min	Max	Unit
Buffer ‘0’				
Air Temperature (act)	105	-58.0	140.0	°F
Rel. Humidity (act)	200	0.0	100.0	%
Dew Point (act)	115	-58.0	14.0	°F
reserved				
Rel. Air Pressure (act)	305	300.0	1200.0	hPa
Buffer ‘1’				
Precipitation Type	700	0, 40		
Precipitation Intensity	840	0.000	7.874	in/h
Amount of Precip. Difference	645	0.0000	3937.0000	in
Amount of Precip. Absolute	640	0.000	3937.000	in
Buffer ‘2’				
Air Temperature (min)	125	-58.0	140.0	°F
Air Temperature (max)	145	-58.0	140.0	°F
Air Temperature (avg)	165	-58.0	140.0	°F
Rel. Humidity (min)	220	0.0	100.0	%
Rel. Humidity (max)	240	0.0	100.0	%
Buffer ‘3’				
Rel. Humidity (avg)	260	0.0	100.0	%
Rel. Air Pressure(min)	325	300.0	1200.0	hPa
Rel. Rel. Humidity (max)	345	300.0	1200.0	hPa
Rel. Rel. Humidity (avg)	365	300.0	1200.0	hPa
Wet Bulb Temperature (act)	119	-58.0	140.0	°F
Specific Enthalpy	215	-100.0	1000.0	kJ/kg

19.6.4.11 Buffer Assignment Basic Data Set Power Saving Mode 2 (all Models)

Device configured for measurement in metric units:

Measurement Value	UMB Channel	Min	Max	Unit
Buffer ‘0’				
Air Temperature (act)	100	-50.0	60.0	°C
Rel. Humidity (act)	200	0.0	100.0	%
Amount of Precip. Difference	625	0.00	100000.00	mm
Rel. Air Pressure(act)	305	300.0	1200.0	hPa
Wind Speed (act)	400	0.0	75.0	m/s
Buffer ‘1’				
Wind Direction(act)	500	0.0	359.9	°
Global Radiation	900	0.0	2000.0 *)	W/m^2
reserved				
External Temperature	101	-20.0	80.0	°C
Buffer ‘2’				
Amount of Precip. Absolute	620	0.0	100000.0	mm
Dew point (act)	110	-50.0	60.0	°C
Abs. Humidity (act)	205	0.0	1000.0	g/m^3
Mixing Ratio(act)	210	0.0	1000.0	g/kg
Abs. Air Pressure(act)	300	300.0	1200.0	hPa
Buffer ‘3’				
Wet Bulb Temperature (act)	114	-50.0	60.0	°C
Specific Enthalpy (act)	215	-100.0	1000.0	kJ/kg
Air Density	310	0.000	3.000	kg/m3
Compass (act)	510	0.0	359.0	°

*) Until device version .49 / .212 / Firmware v5.6: 1400.0 W/m^2

Example: Request Buffer ‘0’

0D0!

`0+13.5+85.7+0.2+1017.0+1.8`

Air temperature 13.5°C, rel. humidity 85.7%, precipitation 0.2°C, rel. air pressure 1017.0hPa, wind speed1.8m/s

Device configured for measurement in US units:

Measurement Value	UMB Channel	Min	Max	Unit
Buffer ‘0’				
Air Temperature (act)	105	-58.0	140.0	°F
Rel. Humidity (act)	200	0.0	100.0	%
Amount of Precip. Difference	645	0.0000	3937.0000	in
Rel. Air Pressure(act)	305	300.0	12000	hPa
Wind Speed (act)	410	0.0	167.8	mph
Buffer ‘1’				
Wind Direction(act)	500	0.0	359.9	°
Global Radiation	900	0.0	2000.0 *)	W/m^2
reserved				
External Temperature	106	-4.0	176.0	°F
Buffer ‘2’				
Amount of Precip. Absolute	640	0.000	3937.000	in
Dew point (act)	115	-58.0	140.0	°F
Abs. Humidity (act)	205	0.0	1000.0	g/m^3
Mixing Ratio(act)	210	0.0	1000.0	g/kg
Abs. Air Pressure(act)	300	300.0	1200.0	hPa
Buffer ‘3’				
Wet Bulb Temperature (act)	119	-58.0	140.0	°F
Specific Enthalpy (act)	215	-100.0	1000.0	kJ/kg
Air Density	310	0.000	3.000	kg/m3
Compass (act)	510	0.0	359.0	°

*) Until device version .49 / .212 / Firmware v5.6: 1400.0 W/m^2

19.6.5 Additional Measurement Commands

With the additional measurement commands

aM1! … aM8!

aMC1! … aMC8! (M-Command, data transmission with CRC)

aC1! … aC8!

aCC1! … aCC8! (C- Command, data transmission with CRC)

The complete data sets of the Smart Weather Sensor, as defined for the UMB protocol are available in a SDI-12 environment as well.

The measurement values are ordered according to sensor types.

Equally to the base data sets max. 9 values can be requested with an additional M command, while an additional C request allows for up to 20 values.

The buffer assignment as documented in the following paragraphs has consequently been structured in a way that with each M command the buffers D0 and D1 are used. If the respective sensor type has more values available the buffers D2 up to D4 will be occupied if required.

M1 / C1	Temperature	M: 9 Values	C: 9 Values
M2 / C2	Humidity	M: 9 Values	C: 13 Values
M3 / C3	Air Pressure	M: 9 Values	C: 9 Values
M4 / C4	Wind	M: 9 Values	C: 14 Values
M5 / C5	Compass	M: 1 Values	C: 1 Values
M6 / C6			
WS401/601:	Precipitation	M: 9 Values	C: 9 Values
Others:	Precipitation	M: 4 Values	C: 4 Values
M7 / C7			
WS800-UMB:	Global Radiation, Lightning Sensor	M: 9 Values	C: 10 Values
WS100-UMB:	Drop Diameter Distrib.	M: ---	C: 17 Values
Others:	Global Radiation	M: 4 Values	C: 4 Values
M8 / C8	Ext. Temperature	M: 1 Value	C: 1 Value

If the sensor type requested with the measurement command is not available with the actual variant of the Smart Weather Sensor (WS100-UMB ... WS800-UMB) the device will respond with

`a0000<CR><LF>` resp.

`a00000<CR><LF>`

19.6.5.1 Buffer Assignment Additional Measurement Commands M1 / C1: Temperature

Device configured for measurement values in metric units:

Measurement Value	UMB Channel	Min	Max	Unit
Buffer ‘0’				
Air Temperature (act)	100	-50.0	60.0	°C
Air Temperature (min)	120	-50.0	60.0	°C
Air Temperature (max)	140	-50.0	60.0	°C
Air Temperature (avg)	160	-50.0	60.0	°C
Dew Point (act)	110	-50.0	60.0	°C
Buffer ‘1’				
Dew Point (min)	130	-50.0	60.0	°C
Dew Point (max)	150	-50.0	60.0	°C
Dew Point (avg)	170	-50.0	60.0	°C
Wet Bulb Temperature (act)	114	-50.0	60.0	°C

Example: Request with M command

```
0M1!
00009<CR><LF>
0D0!
0+12.5+10.7+13.5+11.8+5.3<CR><LF>
0D1!
0+4.2+5.9+5.6+9.8<CR><LF>
```

Device configured for measurement values in US units:

Measurement Value	UMB Channel	Min	Max	Unit
Buffer ‘0’				
Air Temperature (act)	105	-58.0	140.0	°F
Air Temperature (min)	125	-58.0	140.0	°F
Air Temperature (max)	145	-58.0	140.0	°F
Air Temperature (avg)	165	-58.0	140.0	°F
Dew Point (act)	115	-58.0	140.0	°F
Buffer ‘1’				
Dew Point (min)	135	-58.0	140.0	°F
Dew Point (max)	155	-58.0	140.0	°F
Dew Point (avg)	175	-58.0	140.0	°F
Wet Bulb Temperature (act)	119	-58.0	140.0	°F

19.6.5.2 Buffer Assignment Additional Measurement Commands M2 / C2: Humidity

Device configured for measurement values in metric or US units:

Measurement Value	UMB Channel	Min	Max	Unit
Buffer ‘0’				
Rel. Humidity (act)	200	0.0	100.0	%
Rel. Humidity (min)	220	0.0	100.0	%
Rel. Humidity (max)	240	0.0	100.0	%
Rel. Humidity (avg)	260	0.0	100.0	%
Buffer ‘1’				
Abs. Humidity (act)	205	0.0	1000.0	g/m³
Abs. Humidity (min)	225	0.0	1000.0	g/m³
Abs. Humidity (max)	245	0.0	1000.0	g/m³
Abs. Humidity (avg)	265	0.0	1000.0	g/m³
Specific Enthalpy (act)	215	-100.0	1000.0	kJ/kg
Buffer ‘2’				
Mixing Ratio(act)	210	0.0	1000.0	g/kg
Mixing Ratio (min)	230	0.0	1000.0	g/kg
Mixing Ratio (max)	250	0.0	1000.0	g/kg
Mixing Ratio (avg)	270	0.0	1000.0	g/kg

Example: Request with M command

```
0M2!
00009<CR><LF>
0D0!
0+48.5+48.2+48.8+48.5<CR><LF>
0D1!
0+5.7+5.5+5.9+5.7+29.3<CR><LF>
```

Example: Request with C command

```
0C2!
000013<CR><LF>
0D0!
0+48.5+48.2+48.8+48.5<CR><LF>
0D1!
0+5.7+5.5+5.9+5.7+29.3<CR><LF>
0D2!
0+4.6+4.4+5.0+4.6<CR><LF>
```

19.6.5.3 Buffer Assignment Additional Measurement Commands M3 / C3: Air Pressure

Device configured for measurement values in metric or US units:

Measurement Value	UMB Channel	Min	Max	Unit
Buffer ‘0’				
Abs. Air Pressure(act)	300	300.0	1200.0	hPa
Abs. Air Pressure (min)	320	300.0	1200.0	hPa
Abs. Air Pressure (max)	340	300.0	1200.0	hPa
Abs. Air Pressure (avg)	360	300.0	1200.0	hPa
Air Density (act)	310	0.000	3.000	kg/m3
Buffer ‘1’				
Rel. Air Pressure (act)	305	300.0	1200.0	hPa
Rel. Air Pressure (min)	325	300.0	1200.0	hPa
Rel. Air Pressure (max)	345	300.0	1200.0	hPa
Rel. Air Pressure (avg)	365	300.0	1200.0	hPa

Example: Request with M command

```
0M3!
00009<CR><LF>
0D0!
0+1001.0+1000.0+1002.0+1001.0+1.119<CR><LF>
0D1!
0+1017.0+1016.0+1018.0+1017.0<CR><LF>
```

Example: Request with C command

```
0C3!
000009<CR><LF>
0D0!
0+1001.0+1000.0+1002.0+1001.0+1.119<CR><LF>
0D1!
0+1017.0+1016.0+1018.0+1017.0<CR><LF>
```

19.6.5.4 Buffer Assignment Additional Measurement Commands M4 / C4: Wind

Device configured for measurement values in metric units:

Measurement Value	UMB Channel	Min	Max	Unit
Buffer ‘0’				
Wind Speed (act)	400	0.0	75.0	m/s
Wind Speed (min)	420	0.0	75.0	m/s
Wind Speed (max)	440	0.0	75.0	m/s
Wind Speed (avg)	460	0.0	75.0	m/s
Wind Speed (vct)	480	0.0	75.0	m/s
Buffer ‘1’				
Wind Direction (act)	500	0.0	359.9	°
Wind Direction (min)	520	0.0	359.9	°
Wind Direction (max)	540	0.0	359.9	°
Wind Direction (vct)	580	0.0	359.9	°
Buffer ‘2’				
Wind Direction corr. (act)	502	0.0	359.9	°
Wind Quality	805	0.0	100.0	%
Wind Chill Temperature (act)	111	-60.0	70.0	°C
Wind Speed Standard Dev.*	403	0.0	60.0	m/s
Wind Direction Standard Dev.*	503	0.0	359.9	°

Device configured for measurement values in US units:

Measurement Value	UMB Channel	Min	Max	Unit
Buffer ‘0’				
Wind Speed (act)	410	0.0	167.8	mph
Wind Speed (min)	430	0.0	167.8	mph
Wind Speed (max)	450	0.0	167.8	mph
Wind Speed (avg)	470	0.0	167.8	mph
Wind Speed (vct)	490	0.0	167.8	mph
Buffer ‘1’				
Wind Direction (act)	500	0.0	359.9	°
Wind Direction (min)	520	0.0	359.9	°
Wind Direction (max)	540	0.0	359.9	°
Wind Direction (vct)	580	0.0	359.9	°
Buffer ‘2’				
Wind Direction corr. (act)	502	0.0	359.9	°
Wind Quality	805	0.0	100.0	%
Wind chill Temperature (act)	116	-76.0	158.0	°F
Wind Speed Standard Dev.*	413	0.0	167.8	mph
Wind Direction Standard Dev.*	503	0.0	359.9	°

*) **Note**: Std.Dev. values will be available after the first request. See p. 11.

19.6.5.5 Buffer Assignment Additional Measurement Commands M5 / C5: Compass

Device configured for measurement values in metric or US units:

Measurement Value	UMB Channel	Min	Max	Unit
Buffer ‘0’				
Compass (act)	510	0.0	359.0	°

Example: Request with M command

```
0M5!
00001<CR><LF>
0D0!
0+348.0<CR><LF>
```

Example: Request with C command

```
0C5!
000001<CR><LF>
0D0!
0+348.0<CR><LF>
```

19.6.5.6 Buffer Assignment Additional Measurement Commands M6 / C6: Precipitation

Device configured for measurement values in metric units:

Measurement Value	UMB Channel	Min	Max	Unit
Buffer ‘0’				
Precip. Amount absolute	620	0.0	100000.0	mm
Precip. Amount difference	625	0.00	100000.00	mm
Precipitation Intensity	820	0.0	200.0	mm/h
Precipitation Type	700	0, 40, 60, 70 (67, 69, 90)*		
Buffer ‘1’ (WS401-UMB, WS601-UMB only)				
reserved				
reserved				
reserved				
reserved				
reserved				

)* additional precipitation types: WS100-UMB only

Example: Request with M command

0M6!

00009<CR><LF>

0D0!

0+1324.5+1.10+4.4+60<CR><LF>

0D1!

0+603.5+562.4+847.4+623.8+1<CR><LF>

Device configured for measurement values in US units:

Measurement Value	UMB Channel	Min	Max	Unit
Buffer ‘0’				
Precip. Amount absolute	640	0.000	3937.000	In
Precip. Amount difference	645	0.0000	3937.0000	In
Precipitation Intensity	840	0.000	7.874	in/h
Precipitation Type	700	0, 40, 60, 70 (67, 69, 90)*		
Buffer ‘1’ (WS401-UMB, WS601-UMB only)				
reserved				
reserved				
reserved				
reserved				
reserved				

)* additional precipitation types: WS100-UMB only

19.6.5.7 Buffer Assignment Additional Measurement Commands M7 / C7: Global Radiation, Lightning Detection (WS100-UMB: Drop Diameter Distribution)

Assignment for WS30x-UMB, WS50x-UMB, WS700-UMB, WS800-UMB

Device configured for measurement values in metric units:

Measurement Value	UMB Channel	Min	Max	Unit
Buffer ‘0’				
Global Radiation (act)	900	0.0	2000.0 *)	W/m²
Global Radiation (min)	920	0.0	2000.0 *)	W/m²
Global Radiation (max)	940	0.0	2000.0 *)	W/m²
Global Radiation (avg)	960	0.0	2000.0 *)	W/m²
Buffer ‘1’ (WS800-UMB only)				
Lightning Events (minute)	617	0	255	-
Lightning Events (Intervall)	677	0	999	-
reserved				
reserved				
reserved				
Buffer ‘2’ (WS800-UMB only)				
reserved				

*) Until device version .49 / .212 / Firmware v5.6: 1400.0 W/m^2

Example: Request with M Command

```
0M7!
00004<CR><LF>
0D0!
0+780.0+135.0+920.0+530.0<CR><LF>
```

Device configured for measurement values in US units:

Measurement Value	UMB Channel	Min	Max	Unit
Buffer ‘0’				
Global Radiation (act)	900	0.0	2000.0 *)	W/m²
Global Radiation (min)	920	0.0	2000.0 *)	W/m²
Global Radiation (max)	940	0.0	2000.0 *)	W/m²
Global Radiation (avg)	960	0.0	2000.0 *)	W/m²
Buffer ‘1’ (WS800-UMB only)				
Lightning Events (minute)	617	0	255	-
Lightning Events (Intervall)	677	0	999	-
reserved				
reserved				
reserved				
Buffer ‘2’ (WS800-UMB only)				
reserved				

*) Until device version .49 / .212 / Firmware v5.6: 1400.0 W/m^2

Assignment for WS100-UMB, C7 Request only

Device configured for measurement values in metric or US units:

Messgröße	UMB-Kanal	Min	Max	Einheit
Puffer ‘0’				
Total precipitation particles	4600	0	9999999	Event
Total drops	4601	0	9999999	Event
Drizzle particles	4602	0	65535	Event
Snow particles	4603	0	65535	Event
Hail particles	4604	0	65535	Event
Drop class 0	4620	0	65535	Event
Drop class 1	4621	0	65535	Event
Drop class 2	4622	0	65535	Event
Puffer ‘1’				
Drop class 3	4623	0	65535	Event
Drop class 4	4624	0	65535	Event
Drop class 5	4625	0	65535	Event
Drop class 6	4626	0	65535	Event
Drop class 7	4627	0	65535	Event
Drop class 8	4628	0	65535	Event
Drop class 9	4629	0	65535	Event
Drop class 10	4630	0	65535	Event
Drop class 11	4631	0	65535	Event

19.6.5.8 Buffer Assignment Additional Measurement Commands M8 / C8: External Temperature

Device configured for measurement values in metric units:

Measurement Value	UMB Channel	Min	Max	Unit
Buffer ‘0’				
External Temperature (act)	101	-40.0	80.0	°C

Example: Request with M Command

0M8!

00001<CR><LF>

0D0!

0+13.5<CR><LF>

Device configured for measurement values in US units:

Measurement Value	UMB Channel	Min	Max	Unit
Buffer ‘0’				
External Temperature (act)	106	-40.0	176.0	°F

19.6.6 Message Device Identification

The device responds to the identification request with following message (example for SDI-12 device address ‘0’:

0I!

`013Lufft.deWSx00ynnn`

x: device type (4, 5, 6, 2, 3)

y: Metric / US units (m = metric, u = US)

nnn: Software version

i.e. for a WS600-UMB, configured for US units:

0I!

`013Lufft.deWS600u022`

19.6.7 Message Verification

The command verification aV! is used to evaluate status information of the device. The device responds with

`a0005<CR<LF>` WS700/800-UMB: `a0006<CR<LF>`

to the request, i.e. 5 (6) values are available in the buffers.

The first 3 (4) “measurement values”, transmitted in buffer ‘0’ contain the status information of the measurement channels.

The status data of the channels are assembled to form “fake measurement values”, where each digit represents one status. See below for the coding of states. Generally each sensor has two status values, one for the direct value and another for the measurement value buffer used for the evaluation of the average, min, and max values.

The last two values, transmitted in buffer ‘1’, show the heating temperatures of wind and precipitation sensor.

Buffer ‘0’				
Status group1: +nnnn	Air temperature, air temperature buffer, dew point, dew point buffer			
Status group1: +nnnnnn (WS401 / WS601 only)	Air temperature, air temperature buffer, dew point, dew point buffer, reserved, reserved			
Status group 2: +nnnnnn	Rel. Humidity, rel. Humidity buffer, abs. Humidity, abs humidity buffer, mixing ration, mixing ration buffer			
Status group 3: +nnnnnn	Air pressure, air pressure buffer, wind, wind buffer, compass, precipitation (WS301/501 transmits the global radiation status instead of the precipitation status)			
Status group 4: +nnnn (WS700-UMB, WS800-UMB only)	Global radiation status, global radiation buffer status, lightning detector status, lightning detector buffer status			
Buffer ‘1’, device configured for metric units				
Measurement value	UMB Channel	min	max	Unit
Heating temp. Wind sensor	112	-50	+150	°C
Heating temp. Precip. sensor	113	-50	+150	°C
Buffer ‘1’, device configured for US units				
Heating temp. Wind sensor	117	-58	+302	°F
Heating temp. Precip. sensor	118	-58	+302	°F

Sensor status codes:

Sensor status	Code
OK	0
UNGLTG_KANAL	1
E2_CAL_ERROR E2_CRC_KAL_ERR FLASH_CRC_ERR FLASH_WRITE_ERR FLASH_FLOAT_ERR	2
MEAS_ERROR	3
MEAS_UNABLE	4
INIT_ERROR	5
VALUE_OVERFLOW CHANNEL_OVERRANGE	6
VALUE_UNDERFLOW CHANNEL_UNDERRANGE	7
BUSY	8
other sensor status	9

Example (WS600-UMB, SDI-12 Address ‘0’, no error):

```
0V!
00005<CR><LF>
0D0!
0+0000+000000+00000<CR><LF>
0D1!
0+73.0+65.3<CR><LF>
```

Example (WS600-UMB, SDI-12 Address ‘0’, compass failure):

```
0V!
00005<CR><LF>
0D0!
0+0000+000000+000030<CR><LF>
0D1!
0+73.0+65.3<CR><LF>
```

19.6.8 Message Change of Unit System

The command is used to change the unit system used for the SDI12 data between metric and US units. It is implemented as manufacturer specific X command.

Command: `aXU<u/m>!`

Response: `aU<u/m><CR><LF>`

u : US units

m: metric units

Example: change to metric units, SDI-12 address ‘0’

`0XUm!`

`0Um<CR><LF>`

19.6.9 Message: Setting of the Averaging Interval Length

The avg, min, max and vct values of the measurement values are evaluated over a floating interval with a length of 1 to 10 min. The length of this interval can be adjusted separately for the groups temperature / humidity, air pressure and wind. (The averaging algorithm is not applied to precipitation and compass).

Command: `aXA<t/p/w/r>+nn!`

t : Temperature and Humidity

p: Air pressure

w: Wind

r: Global radiation

nn: Interval in minutes, valid range: 1 bis 10

Response: `aXA<t/p/w/r>+nn<CR><LF>`

The response to the attempt of setting of an invalid interval length is

`aXAf<CR><LF>`

Example: Setting the interval for temperature and humidity to 5 minutes

`0XAt+5!`

`0XAt+5<CR><LF>`

19.6.10 Message: Setting of the Local Altitude

For the calculation of the relative air pressure the local altitude of the device is required.

Command: `aXH+nnnn!`

nnnn: local altitude of the sensor in m

Response: `aXH+nnnn<CR><LF>`

The response to the attempt of setting of an invalid altitude (-100 < altitude < 5000) is

`aXHf<CR><LF>`

Example: The altitude of the installation location is 135m above sea level

`0XH+135!`

`0XH+135<CR><LF>`

19.6.11 Setting of the Local Magnetic Declination

For exact compass heading the local magnetic declination must be set.

Command: `aXD+nnn.n!`

nnn.n: local magnetic declination at installation site in ° *)

Response: `aXD+nnn.n<CR><LF>`

The response to the attempt of setting of an invalid altitude (-180.0<declination<+180.0) is

`aXDf<CR><LF>`

Example: The declination at the installation location is -5.3°

`0XD-5.3!`

`0XD-5.3<CR><LF>`

*) The magnetic declination is available from various web sites, e.g.
http://www.ngdc.noaa.gov/geomag-web/#declination

19.6.12 Message: Activation / Deactivation of Compass Correction

The correction of the wind direction by the compass bearing can be activated or deactivated.

Command: `aXW<c/u>!`

c: wind direction is corrected by the compass bearing

u: wind direction is not corrected

Response: `aXW<c/u><CR><LF>`

The response to the attempt of setting an invalid option is

`aXWf<CR><LF>`

Example: Compass correction of wind direction is activated

`0XWc!`

`0XWc<CR><LF>`

19.6.13 Message: Setting the Power Saving Mode

For installations with limited power supply the Smart Weather Sensor may be operated in power saving mode (see Chap. 40).

Note: Operation in power saving mode has some functional restrictions!

Command: `aXL<n/s/w>!`

n: Normal Operation

s: Power saving mode 1 (Heating/Fan off)

w: Power saving mode 2 (Sleep mode)

Response: `aXL<n/s/w><CR><LF>`

The response is followed by the device reset, i.e. the device will be offline for a few seconds.

The response to the selection of an invalid option or of an invalid combination of mode and device model is

`aXLf<CR><LF>`

Example: The device shall be set to power saving mode 2

`0XLw!`

`0XLw<CR><LF>`

19.6.14 Message: Setting the Heating Mode

The heating of the precipitation and the wind sensors can be configured in different operation modes (see chapter 10.4). Depending on the actual variant of the Smart Weather Sensor (WS100-UMB ...WS800-UMB) only certain combinations of operating modes are available. The Smart Weather Sensor evaluates the valid combinations from the device heating mode requested in the command automatically.

Command: `aXMn!`

n: Heating Operating Mode (0: Automatic, 1: Mode 1, 2: Off, 3: Eco Mode 1)

Response: `aXMnm<CR><LF>`

n: Selected Heating Mode Wind Sensor

m: Selected Heating Mode Precipitation Sensor

The response to the attempt of setting an invalid operation mode is

`aXMf<CR><LF>`

Example: A WS400-UMB shall be set to Mode 1

`0XM1!`

`0XM21<CR><LF>`

As the WS400-UMB does not have a wind sensor the heating mode wind is automatically set to 2 (= off).

`0XD+633.0<CR><LF>`

19.6.15 Message: Setting of the Rain Gauge Resolution

The resolution of the tipping bucket rain gauge of WS401-UMB and WS601-UMB, as well as the resolution of an optional external rain gauge connected to a model without internal precipitation measurement can be mechanically adjusted (see p. 35). The mechanical resolution must be set in the sensor configuration.

Command: `aXK+n!`

n: resolution of the rain gauge in 1/10mm, valid settings 1, 2, 5, 10 (0.1mm, 0.2mm, 0.5mm, 1.0mm)

Response: `aXK+n<CR><LF>`

The response to the attempt of setting of an invalid resolution is

`aXKf<CR><LF>`

Example: The mechanical resolution of the rain gauge is 0.2mm

`0XK+2!`

`0XK+2<CR><LF>`

19.6.16 Message: Clearing the Absolute Precipitation Amount

The command clears the accumulated absolute precipitation amount to 0.0mm. At the same time a device reset is applied.

Command: `aXC!`

Response: `aXCok<CR><LF>`

The response is followed by the device reset, i.e. the device will be offline for a few seconds.

Example:

`0XC!`

`0XCok<CR><LF>`

19.6.17 Message: Device Reset

The command initiates a device reset.

Command: `aXR!`

Response: `aXRok<CR><LF>`

The response is followed by the device reset, i.e. the device will be offline for a few seconds.

Example:

`0XR!`

`0XRok<CR><LF>`

19.7 Communication in Modbus Mode

For a simpler integration of WS family Smart Weather Sensors into a PLC environment the Modbus communication protocol has been made available.

Measurement values are mapped to Modbus Input Registers. The range of values available is basically the same as for the UMB protocol, including different unit systems.

In the interest of simple and safe integration the use of register pairs for floating point values or 32 bit integers, which is not part of the Modbus standard, has not been applied. All measurement values are mapped to 16bit integers using suitable scaling factors.

19.7.1 Modbus Communication Parameters

The Smart Weather Sensor can be configured for MODBUS-RTU or for MODBUS-ASCII.

The base configuration has to be done using the UMB Config Tool.

When selecting MODBUS RTU or MODBUS-ASCII with the UMB Config Tool, communication parameters 19200 Bd, even parity, will be preselected.

Modbus operating modes:	MODBUS-RTU, MODBUS-ASCII
Baud rate:	19200 (9600, 4800 or lower)
Interface Setting	8E1, 8N1, 8N2

NOTE: The Modbus communication has been tested for a poll rate of 1 sec. The proper function of the Smart Weather Sensor with higher Modbus poll rates has not been tested.

We suggest to set the poll rate to 10 sec or slower, as, with the exception of the channels „wind speed / wind directions fast“, which are provided for special purposes, the update rate of the data is >= 10sec. Anyway for most of the weather data significant changes have tob e expected more in the range of minutes.

19.7.2 Addressing

The Modbus address is deducted from the the UMB device ID (see Chap. 19.3.2).

A device with UMB device ID 1 also has the UMB address 1, etc..

The valid address range of Modbus from 1 to 247 is smaller than that of the UMB device IDs. If a UMB device ID > 247 has been selected, the Modbus address will be set to 247.

19.7.3 Modbus Functions

The functions of conformance class 0 and 1 have been implemented as far as they are applicable for the Smart Weather Sensor, i.e. all functions operating on register level.

	Conformance Class 0	
0x03	Read Holding Registers	Selected configuration settings
0x16	Write Multiple Registers	Selected configuration settings
	Conformance Class 1	
0x04	Read Input Registers	Measurement values and status information
0x06	Write Single Register	Selected configuration settings
0x07	Read Exception Status	Currently not used
	Diagnostics	
0x11	Report Slave ID	(responds also to broadcast address)

19.7.3.1 Function 0x03 Read Holding Registers

The Holding Registers are used to make a selected set of adjustable parameters available for Modbus access. As for the measurement values the parameters are mapped to 16bit integers.

Reg. No.	Reg. Addr	Function	Values	Scale
1	0	Local Altitude	Altitude in m, for calculation of relative air pressure Value range -100 … 5000	1.0
2	1	Deviation	Local deviation for the correction of compass heading. Value range -3599 … 3599 (equalling -359.9° … +359.9°)	10.0
3	2	Averaging Interval TFF	Interval for averaging and min/max evaluation in minutes Value range 1 … 10	1.0
4	3	Averaging Interval Air Pressure	Interval for averaging and min/max evaluation in minutes Value range 1 … 10	1.0
5	4	Averaging Interval Wind	Interval for averaging and min/max evaluation in minutes Value range 1 … 10	1.0
6	5	Averaging Interval Global Radiation	Interval for averaging and min/max evaluation in minutes Value range 1 … 10	1.0
7	6	Heating Mode	High-Byte: Heating Mode Wind Low-Byte Heating Mode R2S Value range of each byte 0 … 3 (Details s. 10.5)	
8	7	Reset abs. Rain	(Function only when writing to the register, reading will give 0 always)	
9	8	Device reset	(Function only when writing to the register, reading will give 0 always)	

Heating Modes (see 10.5):

Automatic	0
Mode 1	1
Off	2
Eco 1	3

19.7.3.2 Function 0x06 Write Holding Register, 0x10 Write Multiple Registers

By writing into the holding registers selected parameters of the Smart Weather Sensor can be adjusted through Modbus.

Register assignment see19.7.3.1

Local altitude, compass deviation and averaging intervals are set by writing the new values into the related registers. Depending on the selected register the value has to be scaled by the factor given in the table:

Example: for compass deviation the table shows a scaling factor of 10.0. If the deviation is 4.8° a value of 48 shall be written into register 2 (reg.addr. 1).

The transmitted values will be checked for plausibility. Illegal values will not be accepted and cause a Modbus exception.

When writing the value 0x3247 (12871d) to register no. 8 (reg. addr. 7) the stored absolute rain amount will be set to 0. Subsequently a device reset will be initiated.

When writing the value 0x3247 (12871d) to register no. 9 (reg. addr. 8) a device reset will be initiated.

Setting of the heating mode:

The wind sensor heating mode is coded into the high byte of the 16bit register no. 7, the precipitation sensor heating mode into the low byte of this register

Example :

Heating mode wind: Mode 1 (Code 1)

Heating mode precipitation: Off (Code 2)
Write to register 7 (reg. addr. 6): 0x0102 (=258d)

Setting for minimum power consumption, both heatings off (Code 2):
Write to register 7 (reg. addr. 6): 0x0202 (=514d)

The factory setting for a WS600-UMB is automatic mode for both heatings, i.e. 0x0000.

When attempting to set a heating mode not supported by the individual device variant, e.g. activating the precipitation heating of a device without precipitation sensor, the device will automatically adjust the value written to the register, so that the value read back from the register might be different from the written value.

19.7.3.3 Function 0x04 Read Input Registers

The input registers are containing the measurement values of the Smart Weather Sensor and the related status information.

The measurement values are mapped to the 16bit registers using scaling factors (0 … max. 65530 for unsigned values, -32762 … 32762 for signed values).

Values 65535 (0xffff) resp. 32767 are used for the indication of erroneous or not available measurement values. A more detailed specification of the error can be evaluated from the status registers.

The assignment of values to the available register addresses (0 … 124) has been arranged in a way so that the user can read the most frequently used data with few (ideally only one) register block requests

Following blocks have been defined:

- Status information
- Frequently used values which are independent of the unit system (met./ imp.) in use
- Frequently used values in metric units
- Frequently used values in imperial units
- Other measurement values

When using the metric unit system the first three blocks can the supply all data usually required with one request.

There is no difference in the register assignment between the sub types of the WS family. If, dependent on the type, some value is not available, this will be indicated by setting the register to the error value.

For detailed information about measurement ranges, units etc. please refer to the related description of the UMB channels (Chapter 6 and 19.1)

Reg. No.	Reg. Addr.	Value (UMB Channel)	Range	Scaling Factor, Remarks
		Status Information		
1	0	Identification	High Byte: WS-Type (2,3,4,5,6) Low Byte: Software Version	Type coding, see below
2	1	Device Status		
3	2	Sensor Status 1	Air temperature buffer, air temperature, dew point buffer, dew point(high byte -> low byte, see table below)	Coding 4 bit per status, see below
4	3	Sensor Status 2	Rel. humidity buffer, rel. humidity, abs. humidity buffer, abs. humidity(high byte -> low byte, see table below)	Coding 4 bit per status, see below
5	4	Sensor Status 3	Mixing ratio buffer, mixing ration, air press. buffer, air press. (high byte -> low byte, see table below)	Coding 4 bit per status, see below
6	5	Sensor Status 4	Wind buffer, wind, precipitation, compass(high byte -> low byte, see table below)	Coding 4 bit per status, see below
7	6	Sensor Status 5	Global radiation buffer, global radiation, reserved, reserved (high byte -> low byte, see table below)	Coding 4 bit per status, see below
8	7	Sensor Status 6	External temperature / external rain gauge, lightning sensor, lightning sensor buffer (see table below)	Coding 4 bit per status, see below
9	8	Reserve		
10	9		Diagnostic: run time in 10sec steps	

Reg. No.	Reg. Addr.	Value (UMB Channel)	Range	Scaling Factor, signed/unsigned, Remarks
		Values Independent of the Unit System		
11	10	200	Relative Humidity (act.)	Factor 10, s
12	11	220	Relative Humidity (min.)	Factor 10, s
13	12	240	Relative Humidity (max.)	Factor 10, s
14	13	260	Relative Humidity (avg.)	Factor 10, s
15	14	305	Rel. Air Pressure (act.)	Factor 10, s
16	15	325	Rel. Air Pressure (min.)	Factor 10, s
17	16	345	Rel. Air Pressure (max.)	Factor 10, s
18	17	365	Rel. Air Pressure (avg.)	Factor 10, s
19	18	500	Wind Direction (act.)	Factor 10, s
20	19	520	Wind Direction (min.)	Factor 10, s
21	20	540	Wind Direction (max.)	Factor 10, s
22	21	580	Wind Direction (vct.)	Factor 10, s
23	22	501	Wind Direction fast	Factor 10, s
24	23	502	Wind Direction compass corr.	Factor 10, s
25	24	510	Compass	Factor 10, s
26	25	700	Precipitation Type	Factor 1, s
27	26	805	Wind Measurement Quality	Factor 1, u
28	27	900	Global Radiation (act.)	Factor 10, s
29	28	920	Global Radiation (min.)	Factor 10, s
30	29	940	Global Radiation (max.)	Factor 10, s
31	30	960	Global Radiation (avg.)	Factor 10, s

Reg. No.	Reg. Addr.	Value (UMB Channel)	Range	Scaling Factor, signed/unsigned Remarks
		Values in Metric Units		
32	31	100	Air Temperature °C (act.)	Factor 10, s
33	32	120	Air Temperature °C (min.)	Factor 10, s
34	33	140	Air Temperature °C (max.)	Factor 10, s
35	34	160	Air Temperature °C (avg.)	Factor 10, s
36	35	110	Dew Point °C (akt.)	Factor 10, s
37	36	130	Dew Point °C (min.)	Factor 10, s
38	37	150	Dew Point °C (max.)	Factor 10, s
39	38	170	Dew Point °C (avg.)	Factor 10, s
40	39	111	Wind Chill-Temperature °C	Factor 10, s
41	40	112	Heating Temperature Wind °C	Factor 10, s
42	41	113	Heating Temperature R2S °C	Factor 10, s
43	42	400	Wind Speed m/s (akt.)	Factor 10, s
44	43	420	Wind Speed m/s (min.)	Factor 10, s
45	44	440	Wind Speed m/s (max.)	Factor 10, s
46	45	460	Wind Speed m/s (avg.)	Factor 10, s
47	46	480	Wind Speed m/s (vct.)	Factor 10, s
48	47	401	Wind Speed fast m/s	Factor 10, s
49	48	620	Precipitation abs. mm	Factor 100, u, limited to 655.34mm
50	49	625	Precipitation diff. mm	Factor 100, u, limited to 100.00mm
51	50	820	Precipitation intens. mm/h	Factor 100, u, limited to 200.00mm/h

Reg. No.	Reg. Addr.	Value (UMB Channel)	Range	Scaling Factor, signed/unsigned Remarks
		Values in US Units		
52	51	105	Air Temperature °F (act.)	Factor 10, s
53	52	125	Air Temperature °F (min.)	Factor 10, s
54	53	145	Air Temperature °F (max.)	Factor 10, s
55	54	165	Air Temperature °F (avg.)	Factor 10, s
56	55	115	Dew Point °F (act.)	Factor 10, s
57	56	135	Dew Point °F (min.)	Factor 10, s
58	57	155	Dew Point °F (max.)	Factor 10, s
59	58	175	Dew Point °F (avg.)	Factor 10, s
60	59	116	Wind Chill-Temperature °F	Factor 10, s
61	60	117	Heating Temperature Wind °F	Factor 10, s
62	61	118	Heating Temperature R2S °F	Factor 10, s
63	62	410	Wind Speed mph (act.)	Factor 10, s
64	63	430	Wind Speed mph (min.)	Factor 10, s
65	64	450	Wind Speed mph (max.)	Factor 10, s
66	65	470	Wind Speed mph (avg.)	Factor 10, s
67	66	490	Wind Speed mph (vct.)	Factor 10, s
68	67	411	Wind Speed fast mph	Factor 10, s
69	68	640	Precipitation abs. In	Factor 1000, u, limited to 25.800 in
70	69	645	Precipitation diff. in	Factor 10000, u, limited to 3.9370in
71	70	840	Precipitation Intens. in/h	Factor 10000, u, limited to 6.5534 in

Reg. No.	Reg. Addr.	Value (UMB Channel)	Range	Scaling Factor, signed/unsigned, Remarks
		Further Values		
72	71	205	Absolute Humidity (act.)	Factor 10, s
73	72	225	Absolute Humidity (min.)	Factor 10, s
74	73	245	Absolute Humidity (max.)	Factor 10, s
75	74	265	Absolute Humidity (avg.)	Factor 10, s
76	75	210	Mixing Ratio (act.)	Factor 10, s
77	76	230	Mixing Ratio (min.)	Factor 10, s
78	77	250	Mixing Ratio (max.)	Factor 10, s
79	78	270	Mixing Ratio (avg.)	Factor 10, s
80	79	300	Abs. Air Pressure (act.)	Factor 10, s
81	80	320	Abs. Air Pressure (min.)	Factor 10, s
82	81	340	Abs. Air Pressure (max.)	Factor 10, s
83	82	360	Abs. Air Pressure (avg.)	Factor 10, s
84	83	405	Wind Speed km/h (act.)	Factor 10, s
85	84	425	Wind Speed km/h (min.)	Factor 10, s
86	85	445	Wind Speed km/h (max.)	Factor 10, s
87	86	465	Wind Speed km/h (avg.)	Factor 10, s
88	87	485	Wind Speed km/h (vct.)	Factor 10, s
89	88	415	Wind Speed kts (act.)	Factor 10, s
90	89	435	Wind Speed kts (min.)	Factor 10, s
91	90	455	Wind Speed kts (max.)	Factor 10 , s
92	91	475	Wind Speed kts (avg.)	Factor 10, s
93	92	495	Wind Speed kts (vct.)	Factor 10, s
94	93	406	Wind Speed fast km/h	Factor 10, s
95	94	416	Wind Speed fast kts	Factor 10, s
96	95	403	Wind Speed Std. Dev. m/s *	Factor 100, s
97	96	413	Wind Speed Std. Dev. Mph *	Factor 100, s
98	97	503	Wind Dir. Standard Dev.*	Factor 100, s
99	98	114	Wet Bulb Temp. °C (act)	Factor 10, s
100	99	119	Wet Bulb Temp. °F (act)	Factor 10, s
101	100	215	Specific Enthalpy (act)	Factor 10, s
102	101	310	Air Density (act)	Factor 1000, s

***) Note:** Standard deviation values are available after the first request. Please see p. 11

Reg. No.	Reg. Addr.	Value (UMB Channel)	Range	Scaling Factor, signed/unsigned, Remarks
		Further Values		
103	102	710	reserved	Factor 1, s
104	103	730	reserved	Factor 1, s
105	104	750	reserved	Factor 1, s
106	105	770	reserved	Factor 1, s
107	106	711	reserved	Factor 1, s
108	107	101	External Temperature °C (act)	Factor 10, s
109	108	109	External Temperature °F (act)	Factor 10, s
110	109	806	Wind Value Quality (fast)	Factor 1, u
111	110	617	Lightning Events (minute)	Factor 1, u
112	111	677	Lightning Events (Intervall)	Factor 1, u
		Reserved		

Service Channels

Air temperature (WS100-UMB only, no radiation shield)

Reg. No.	Reg. Addr.	Value (UMB Channel)	Range	Scaling Factor, signed/unsigned Remarks
		Values in Metric Units		
150	149	4100	Air Temperature °C (act.)	Factor 10, s
151	150	4120	Air Temperature °C (min.)	Factor 10, s
152	151	4140	Air Temperature °C (max.)	Factor 10, s
153	152	4160	Air Temperature °C (avg.)	Factor 10, s
154	153	4105	Air Temperature °F (act.)	Factor 10, s
155	154	4125	Air Temperature °F (min.)	Factor 10, s
156	155	4145	Air Temperature °F (max.)	Factor 10, s
157	156	4156	Air Temperature °F (avg.)	Factor 10, s

Drop Diameter Distribution (WS100-UMB only)

Reg. No.	**Reg. Addr.**	**Value (UMB Channel)**	**Range**	**Scaling Factor, signed/unsigned, Remarks**
130	129	4600	Total particles	Faktor 1, u
131	130	4601	Total drops	Faktor 1, u
132	131	4602	Drizzle particles	Faktor 1, u
133	132	4603	Snow particles	Faktor 1, u
134	133	4604	Hail particles	Faktor 1, u
135	134	4620	Drop class 0	Faktor 1, u
136	135	4621	Drop class 1	Faktor 1, u
137	136	4622	Drop class 2	Faktor 1, u
138	137	4623	Drop class 3	Faktor 1, u
139	138	4624	Drop class 4	Faktor 1, u
140	139	4625	Drop class 5	Faktor 1, u
141	140	4626	Drop class 6	Faktor 1, u
142	141	4627	Drop class 7	Faktor 1, u
143	142	4628	Drop class 8	Faktor 1, u
144	143	4629	Drop class 9	Faktor 1, u
145	144	4630	Drop class 10	Faktor 1, u
146	145	4631	Drop class 11	Faktor 1, u
		Reserve		

Smart Weather Sensor Type Code

WS100-UMB	1	WS303-UMB	33
WS200-UMB	2	WS304-UMB	43
WS300-UMB	3	WS310-UMB	93
WS400-UMB	4	WS501-UMB	15
WS500-UMB	5	WS502-UMB	25
WS600-UMB	6	WS503-UMB	35
WS700-UMB	7	WS504-UMB	45
WS800-UMB	8	WS510-UMB	95
WS301-UMB	13	WS401-UMB	14
WS302-UMB	23	WS601-UMB	16

Sensor Status:
Each register holds 4 sensor status coded with 4 bits per status, so that together they build one 16bit number. The sequence defined in the table above is to understand as from most significant half byte to least significant half byte. Most of the sensors have two status values, one for the sensor itself and the current measurement value, another one for the buffer, from which average, min. And max values are evaluated.

Assignment of Status Information to Status Register

Register	**Byte**	**Half-Byte**	**Status**
Sensor Status 1	High	High	Temperature Buffer
		Low	Temperature
	Low	High	Dewpoint Buffer
		Low	Dewpoint
Sensor Status 2	High	High	Rel. Humidity Buffer
		Low	Rel. Humidity
	Low	High	Abs. Humidity Buffer
		Low	Abs. Humidity
Sensor Status 3	High	High	Mixing Ratio Buffer
		Low	Mixing Ratio
	Low	High	Air Pressure Buffer
		Low	Air Pressure
Sensor Status 4	High	High	Wind Buffer
		Low	Wind
	Low	High	Precipitation
		Low	Compass
Sensor Status 5	High	High	Global Radiation Buffer
		Low	Global Radiation
	Low	High	reserved
		Low	reserved
Sensor Status 6	High	High	
		Low	External Temperature
	Low	High	Lightning Sensor Buffer
		Low	Lightning Sensor

Example Sensor Status 1:

Temperature buffer status, temperature status, dewpoint buffer status, dewpoint status

High Byte		Low Byte	
High	Low	High	Low
Temperature-Buffer	Temperature	Dew point-Buffer	Dew point
5	3	0	7

The example values above (for illustration only, the given combination will not occur in reality) are combined to the register value 0x5307 = 21255.

The single status are retrieved from the register as integer part of

Status 1 = register / 4096

Status 2 = (register / 256) AND 0x000F

Status 3 = (register / 16) AND 0x000F

Status 4 = register AND 0x000F

Following table shows the status coding:

Coding of Sensor Status:

Sensor State	**Code**
OK	0
UNGLTG_KANAL	1
E2_CAL_ERROR E2_CRC_KAL_ERR FLASH_CRC_ERR FLASH_WRITE_ERR FLASH_FLOAT_ERR	2
MEAS_ERROR, MEAS_UNABLE	3
INIT_ERROR	4
VALUE_OVERFLOW CHANNEL_OVERRANGE VALUE_UNDERFLOW CHANNEL_UNDERRANGE	5
BUSY	6
Other Sensor State	7

19.8 Communication: XDR Protocol

Note: XDR protocol is not available for WS100-UMB.

The XDR protocol allows to transmit a selected data set of the Smart Weather Sensor in a NMEA compatible format. The data telegram can be transmitted on request, or the Smart Weather Sensor can be set into auto transmit mode, where the data telegram will be triggered automatically at an selectable interval.

A set of ASCII configuration messages allows to apply some configuration settings without leaving the XDR protocol.

For configuration settings exceeding this command set use the UMB Config Tool. To change into the UMB protocol a UMB message must be addressed to the device within 5 seconds after power up or reset.

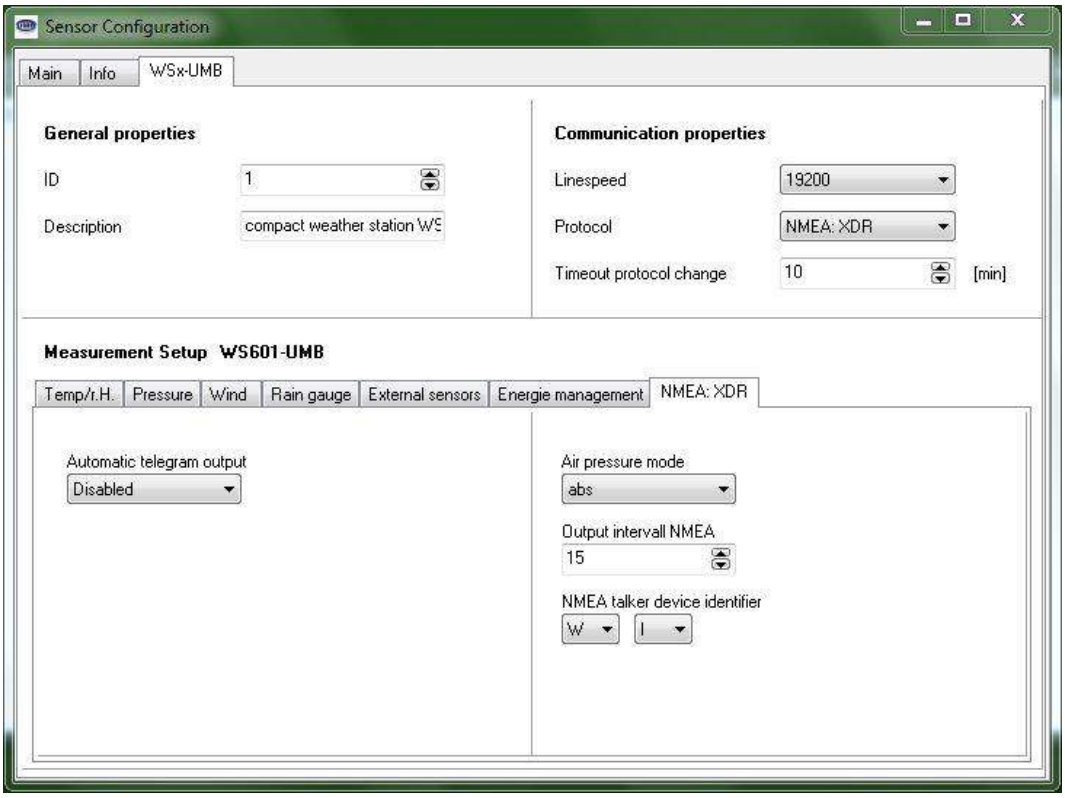

Figure 45: Sensor Configuration XDR

Protocol	XDR protocol selected
Automatic telegram output	activate continous mode (automatic result message transmission)
Air pressure mode	select absolute or relative air pressure for the measurement data message (seconds)
Output Interval NMEA	Interval for automatic result message transmission
NMEA talker device identifier	Select the Talker ID part of the NMEA telegram header

19.8.1 Basic Interface Properties

- Baud rate configurable from 1200bps to 57600bps, character format 8 bits, no parity, 1 stop bit (8N1).
- Unit ID equal to UMB device ID, but limited to 98. 99 is the broadcast ID
- Data output on request or continuously (configurable)
- Commands and messages use strictly ASCII text mode

19.8.2 Message Format for Commands and Responses

Byte		
0	'*'	Start Character
1,2	'01'	Destination ID
3,4	'00'	Source ID
5 ... n		Command Data (min. 2)
n+1, n+2	<CR><LF>	Termination Characters

The command data field always starts with the 2-character command identifier, optionally followed by a parameter, starting with '='.

Currently implemented commands are

- P9 single measurement XDR format
- PP start continuous measurement XDR format
- PB single measurement PWSD format
- PC start continuous measurement PWSD format
- GW option: add MWD sentence (wind data) to XDR format
- MI continuous measurement interval
- J3 pressure mode (absolute air pressure / relative air pressure)
- JS pressure sensor elevation
- JW spot or average output of wind data
- BR baud rate
- ID unit ID
- NH message prefix

If the device receives an invalid command (missing start or termination character, invalid ID, invalid structure etc.), it will not respond.

If a setting command contains an invalid parameter value, the device will not respond.

Setting commands must usually be preceded by the “Write Enable” command EW. This command does not generate a response, and may be, different from other commands, transmitted without message terminators (<CR><LF>). I.e. the write enable and the set command may be concatenated without terminators between the commands.

Example:

0100EW*0100J3=1<CR><LF>

and

0100EW<CR><LF>*0100J3=1<CR><LF>

are both valid command sequences for setting the pressure mode.

Setting commands not requiring a preceding write enable are marked in the command description.

19.8.3 Message Format for Measurement Data XDR

The message format for P9 / PP measurement data follows the definition for NMEA WI (weather instrument) XDR messages.

The message is field oriented, with variable length. The fields are separated by ',‘.

Message format:

$hhhhh,P,x.xxxx,B,0,C,yy.y,C,0,H,zz.z,P,0<CR><LF>

$hhhhh	Message header, default $WIXDR (WI : Talker identifier “weather instruments”, XDR: sentence identifier “transducer measurements”) *)
,	separator
P	transducer type “pressure”
,	separator
x.xxxx	air pressure value in Bar
,	separator
B	unit: bars (= hPa)
,	separator
0	Transducer ID, set to 0
,	separator
C	transducer type temperature
,	separator
yy.y	temperature in °C
,	separator
C	unit: °C
,	separator
0	Transducer ID, set to 0
,	separator
H	transducer type humidity
zz.z	relative humiditiy in %
,	separator
P	unit: %
,	separator
0	Transducer ID, set to 0
<CR><LF>	sentence terminator

*) The message header can be modified. The UMB config tool allows modifying the talker ID bytes. The XDR setting command NH allows changing the complete message header. The leading '$' is fixed and can not be modified.

19.8.4 Message Format for Measurement Data MWD

The P9 / PP measurement data transmission can be optionally extended by a MWD sentence containing wind data. The MWD sentence follows the definition for NMEA WI (weather instrument) messages.

This option can be activated or deactivated by the GW command.

The JW command selects between spot value and average value output of wind data.

The message is field oriented, with variable length. The fields are separated by ',‘.

Message format:

$hhhhh, aaa.a,T,bbb.b,M,cc.c,N ,dd.d,M <CR><LF>

$hhhhh	Message header, default $WIMWD (WI : Talker identifier “weather instruments”, MWD: sentence identifier “wind measurements”) *)
,	separator
aaa.a	wind direction in °”
,	separator
T	identifier “True North”
,	separator
bbb.b	wind direction in °
,	separator
M	identifier “Magnetic Nord”
,	separator
cc.c	wind speed in knots
,	separator
N	unit: kts
,	separator
dd.d	wind speed in m/s
,	separator
M	unit: m/s
<CR><LF>	sentence terminator

*) The message header can be modified. The MWD sentence uses the same talker ID as the XDR sentence, which can be modified by the UMB config tool or the XDR setting command NH. The leading '$' is and the identifier MWD are fixed and can not be modified
**) here wind direction “true” and wind direction “magnetic” are identical.

19.8.5 Message Format for Measurement 0R0

The 0R0 sentence format is a proprietary format similar to NMEA 0183 rules. The 0R0 sentence contains essential measurement values of the compact weather station and is designed for compatibility with existing installations.

The sentence is requested by the PB command for single measurement and PC for cyclic transmission.

If certain measurement values are not available for the subtype of the individual weather station the related value will be replaced by 999999. The same applies for measurement values with status not “OK”.

The message is field oriented, with variable length. The fields are separated by ',’.

Message Format:

0R0,Dm=aaaD,Sm=bb.bM,Ta=cc.cC,Ua=dd.dP,Pa=e.eeeeB,Rc=f.ffM, Pt=ggN<CR><LF>

0R0	message header
,	separator
Dm	identifier wind direction
=	separator
aaa	wind direction in °
D	unit °
,	separator
Sm	identifier wind speed
=	separator
bb.b	wind speed in m/s
M	unit m/s
,	separator
Ta	identifier air temperature
=	separator
cc.c	air temperature in °C
C	unit: °C
,	separator
Ua	identifier relative humidity
=	separator
dd.d	relative humidity in %
P	unit %
,	separator
Pa	identifier air pressure
=	separator
e.eeee	air pressure in Bar
B	unit Bar
,	separator
Rc	identifier precipitation difference
=	separator
ff.ff	precipitation difference (related to last transmission) in mm
M	unit mm
,	separator

Pt	identifier precipitation type
=	separator
gg	precipitation code (00 no precip., 60 rain, 70 snow)
C	unit: Code
<CR><LF>	sentence terminator

19.8.6 Measurement Commands

Command Examples are shown for unit ID 01

19.8.6.1 Single Measurement XDR format

Command identifier: **P9**

Parameter: none

Command example:

Command: *0100P9<CR><LF>

Response (wind data not activated):

$WIXDR,P,<pressure in bar>,B,0,C,<air temperature °C>,C,0,H,<rel. Humidity %>,P,0<CR><LF>

Response (wind data activated):

$WIXDR,P,<pressure in bar>,B,0,C,<air temperature °C>,C,0,H,<rel. Humidity %>,P,0<CR><LF>

$WIMWD,<wind direction °>,T, < wind direction °>,M,<wind speed kts>,N ,< wind speed m/s>,M<CR><LF>

Serial numbers of pressure and T/H sensor are not available and set to 0.

19.8.6.2 Continuous Measurement XDR format

Command identifier: **PP**

Parameter: none

Command example:

Command *0100PP<CR><LF>

After this command the device will start to transmit the result message as defined in for the single measurement automatically with the interval defined by the transmission interval command (see 19.8.7.1) or set by the UMB Config Tool.

The default interval is 60 seconds, minimum allowed interval is 10sec, maximum interval is 43200sec (=12h).

The continuous mode will be stored in the E2PROM of the device, so that after a reset the device will continue to transmit automatically.

The continuous mode is terminated by a Single Measurement Command (19.8.6.1, 19.8.6.3).

19.8.6.3 Single Measurement 0R0 Format

Command identifier: **PB**

Parameter: none

Command example:

Command *0100PB<CR><LF>

Response:

0R0,Dm=<wind dir.>D,Sm=<wind speed>M,Ta=<air temp.>C,Ua=<rel. humidity>P,Pa=<air press.>B,Rc=<precip. diff.>M, Pt=<precip. type>N<CR><LF>

19.8.6.4 Continuous Measurement 0R0 Format

Command identifier: **PC**

Parameter: none

Command example:

Command *0100PC<CR><LF>

After this command the device will start to transmit the result message as defined in for the single measurement automatically with the interval defined by the transmission interval command (see 19.8.7.1) or set by the UMB Config Tool.

The default interval is 60 seconds, minimum allowed interval is 10sec, maximum interval is 43200sec (=12h).

The continuous mode will be stored in the E2PROM of the device, so that after a reset the device will continue to transmit automatically.

The continuous mode is terminated by a Single Measurement Command (19.8.6.1, 19.8.6.3).

19.8.7 Configuration Commands

Command Examples are shown for unit ID 01

19.8.7.1 Transmission Interval for Continuous Measurement

Command identifier: **MI**

Parameter: interval in seconds (min. 10, max. 43200, default 60)

Request command example:

Command: *0100MI<CR><LF>

Response: *0001MI=60<CR><LF>

The command requests the current setting of the result transmission interval

Setting command example (to be preceded by the write enable command)

Command: *0100MI=60<CR><LF>

Response: *0001MI=60<CR><LF>

The command sets the interval for automatic measurement result transmission (19.8.6.2) in seconds.

19.8.7.2 Option Append Wind Data (MWD) to XDR Sentence

Command identifier: **GW**

Parameter: 0 = wind data off, 1 = wind data on

Request command example:

Command: *0100GW<CR><LF>

Response: *0001GW=0<CR><LF>

The command requests the current setting of the wind data option.

Setting command example (to be preceded by the write enable command)

Command: *0100GW=1<CR><LF>

Response: *0001GW=1<CR><LF>

The command sets the wind data option.

19.8.7.3 Select Spot Values or Average Values of Wind Data

Command identifier: **JW**

Parameter: 0 = wind data spot values, 1 = wind data average values

Request command example:

Command: *0100JW<CR><LF>

Response: *0001JW=1<CR><LF>

The command requests the current setting of the wind data average setting.

Setting command example (to be preceded by the write enable command)

Command: *0100JW=0<CR><LF>

Response: *0001JW=0<CR><LF>

The command sets the wind data average or spot transmission.

19.8.7.4 Pressure Mode Selection Command

Command identifier: **J3**

Parameter: 0 = absolute pressure, 1 = relative pressure

Selects, if the absolute or relative (sea level) air pressure is transmitted in the measurement value message (0). For correct function of the conversion to relative (sea level) pressure it is essential, that the sensor elevation has been set correctly (JS command (19.8.7.5) or UMB Config Tool)

Request command example:

Command: *0100J3<CR><LF>

Response: *0001J3=1<CR><>LF>

Requests the current pressure mode

Setting command example (to be preceded by the write enable command):

Command: *0100J3=0<CR><LF>

Response: *0100J3=0<CR><LF>

Sets the pressure mode:

0 absolute air pressure

1 relative air pressure

19.8.7.5 Sensor Elevation Setting Command

Command identifier: **JS**

Parameter: sensor elevation (above sea level) in m

Remark: the sensor elevation may be entered as integer value or as fixed point value, the sensor will round the value for internal storage to integer (full meters).

Request command example:

Command: *0100JS<CR><LF>

Response: *0001JS=353<CR><LF>

Requests the current elevation setting

Setting command example (to be preceded by the write enable command):

Command: *0100JS=82<CR><LF> or *0100JS=82.3<CR><LF>

Response: *0001JS=82<CR><LF>

Sets the elevation of the sensor above sea level in m (range -100m to 5000m)

19.8.7.6 NMEA Message Prefix Setting Command

Command identifier: **NH**

Parameter: complete NMEA Header ('$' + max. 6 char)

Note: The parameter must always start with the '$' character. This character is nevertheless fixed and will not be modified.

Request command example:

Command: *0100NH<CR><LF>

Response: *0001NH=$WIXDR<CR><LF>

Requests the current header of the NMEA measurement value sentence

Setting command example (to be preceded by the write enable command):

Command: *0100NH=$WIXDR<CR><LF>

Response: *0001NH=$WIXDR<CR><LF>

Sets the prefix of the NMEA measurement value

19.8.7.7 Baud Rate Setting Command

Command identifier: **BR**

Parameter: Baudrate (1200, 2400, 4800, 9600, 19200, 28800, 38400, 57600)

Note: this command only provides the set mode and is only valid with the broadcast destination ID 99.

After execution of the command the Smart Weather Sensor will perform a reset and then start with the new baudrate.

The command does not require to be preceded by the write enable command.

Setting command example:

Command: *9900BR=9600<CR><LF>

Response: *9900BR=9600<CR><LF>

Sets the baud rate

19.8.7.8 Unit ID Setting Command

Command identifier: **ID**

Parameter: none

Note: This command does not accept a separate parameter, but uses the source ID of the address fields as input. The ID of the device is set to (source ID + 1). Source ID values 0 ... 97 are allowed.

The command only provides the set mode and is only valid with the broadcast destination ID 99.

After execution of the command the Smart Weather Sensor will perform a reset and then start with the new unit ID.

The command does not require to be preceded by the write enable command.

Setting command example:

Command: *9900ID<CR><LF>

Response: *9901ID<CR><LF>

Sets the unit ID to source ID + 1

19.8.7.9 Write Enable Command

Command identifier: **EW**

Parameter: none

This command is intended to protect the device from accidental setting modifications and must precede most of the setting commands.

The command is not available as request command and does not generate a response.

This command is valid with and without termination characters.

Command example:

*0100EW

or

*0100EW<CR><LF>

20 List of Figures

Figure 1: Sensor Technology 13
Figure 2: Fastening to the Mast 23
Figure 3: North Markings 24
Figure 4: Alignment to North 24
Figure 5: Installation Sketch 26
Figure 6: Connections 27
Figure 7: Connection to ISOCON-UMB 29
Figure 8: Sensor Selection 32
Figure 9: General Settings 33
Figure 10: Temperature, Humidity and Fan Settings 33
Figure 11: Pressure Settings 34
Figure 12: Wind Settings 34
Figure 13: Precipitation Sensor Settings (Radar) 35
Figure 14: Precipitation Sensor Settings (Rain Gauge) 35
Figure 15: Global Radiation Settings 36
Figure 16: Lightning Sensor Settings 36
Figure 17: Energy Management Settings 36
Figure 18: Reset Precipitation Quantity 37
Abb. 19: Select operation mode „Simulated Rain Gauge“ 38
Abb. 20: Configure the resolution of the simulated rain gauge 38
Figure 21 Measurement Polling Channels 39
Figure 22 Example of Measurement Polling 39
Figure 23: Operating Modes for Equipment Heating 42
Figure 24: WS601-UMB with removed funnel 45
Figure 25: WS100-UMB 51
Figure 26: WS200-UMB 51
Figure 27: WS200-UMB 52
Figure 28: WS301-UMB 53
Figure 29: WS310-UMB 54
Figure 30: WS400-UMB 55
Figure 31: WS401-UMB 56
Figure 32: WS500-UMB 57
Figure 33: WS501-UMB 58
Figure 34: WS510-UMB 59
Figure 35: WS600-UMB 60
Figure 36: WS601-UMB 61
Figure 37: WS700-UMB, WS800-UMB 62
Figure 38: Setting type of external sensor 67
Figure 39: Example WS501-UMB and WTB100 68
Figure 40: Sensor Configuration SDI-12 81
Figure 41: Sensor Configuration SDI-12 Units 81
Figure. 42: Connecting to a logger with integrated power supply 82
Figure. 43: Connecting to a logger and a separate power supply **up to device version 41** 82
Figure. 44: Connecting to a logger and a separate power supply **device version 42 and newer** 82
Figure 45: Sensor Configuration XDR 136

21 Index

A

Accessories ... 9
Accuracy ... 48
Air Density ... 11, 16
Air Pressure ... 11, 15
Air Temperature ... 10
Altitude ... 34
ASCII-Protokoll ... 75

B

Binary Protocol ... 72

C

Certificate of Conformity ... 63
Channel List ... 69
Channel List per TLS2002 ... 71
Class ID ... 72, 73
Commissioning ... 30
Communication ... 78
Communication ... 75
Communication ... 124
Communication ... 136
Compass ... 11, 18, 34
Configuration ... 31
Connections ... 27

D

Data Request ... 72
Declination ... 34
Delivery Status ... 32
Designated Use ... 5
Device ID ... 72, 73
Dimensions ... 46
Disposal ... 66
Distance between objects ... 25
Drawings ... 51

E

Energy Management ... 36
Enthalpy ... 11, 16
Error Codes ... 74, 77
External Rain Gauge ... 12, 67
External Sensors ... 27
External Temperature Sensor ... 11, 67

F

Factory Settings ... 32
Fan ... 33
Fault Description ... 65
Firmware Update ... 44

G

Global Radiation ... 11, 20

H

Heating ... 11, 20, 27, 28, 29, 42, 46
Humidity ... 10, 15

I

Incorrect Use ... 5
Installation ... 23
Installation Location ... 25
Interface ... 28, 47
ISOCON-UMB ... 29

L

Local Altitude ... 34

M

Maintenance ... 44
Measurement Output ... 15
Measurement Polling (UMB-Config-Tool) ... 39
Measurement Values ... 14
Measuring Range ... 48
Modbus ... 124

N

North Alignment ... 24

O

Operating Conditions ... 47
Operating Modes ... 40
Order Numbers ... 7

P

Power Saving Mode ... 40, 74
Power Supply Unit ... 28
Precipitation ... 11, 19
Protection type ... 47

R

Relative Air Pressure ... 34
Reset Precipitation Quantity ... 37

S

Safety Instructions ... 5
Scope of Delivery ... 6
SDI-12 Mode ... 81
Sensor Technology ... 13
Storage Conditions ... 47
Supply Voltage ... 27, 28
Symbols Used ... 5

T

Technical Data ... 46
Technical Support ... 66
Temperature ... 15
Terminal-Mode ... 78
Test ... 31

U

UMB-Config-Tool ... 32, 39

W

Warranty ... 5, 66
Weight ... 47
Wet Bulb Temperature ... 16
WetBulb Temperature ... 11
Wind ... 11, 17

X

XDR Protocol ... 136

Blank page for printing purposes.

Blank page for printing purposes.

Blank page for printing purposes.

a passion for precision · passion pour la précision · pasión por la precisión · passione per

G. LUFFT Mess- und Regeltechnik GmbH

Lufft Germany:

Postal Address:
Gutenbergstrasse 20
70736 Fellbach
Address:
P.O. Box 4252
70719 Fellbach
Tel. +49 (0)711-51 822-0
Fax +49 (0)711-51 822-41
www.lufft.com
info@lufft.de

Lufft North America:

Lufft USA, Inc.
820 E Mason St #A
Santa Barbara, CA 93103
Tel.: +01 919 556 0818
Fax: +01 805 845 4275
E-Mail: sales@lufftusainc.com
www.lufft.com

Lufft China:

Shanghai Office:
Lufft (Shanghai)
Measurement & Control
Technology Co., Ltd.
Room 507 & 509, Building No.3,
Shanghai Yinshi Science and Business Park,
No. 2568 Gudai Road,
Minhang District,
201199 Shanghai, CHINA
Tel: +86 21 5437 0890
Fax: +86 21 5437 0910
E-Mail: china@lufft.com
www.lufft.cn

Beijing Office:
B501 Jiatai International Mansion
No. 41 East 4th Ring Road,
Chaoyang District,
100025 Beijing, CHINA
Tel: +86 10 65202779
Fax: +86 10 65202789
E-Mail: china@lufft.com
www.lufft.cn

Lufft