# iRobot®

## Braava jet™

# Owner's Guide

# Table of Contents

iRobot Braava jet™

EN


What's In the Box 2
Robot Anatomy 4
Setup Guide 8
Choosing the Right Braava jet™ Pad 18
How iRobot Braava jet Cleans 20
Tips for Best Performance 28
Troubleshooting 30
Regular Robot Care 32
Safety and Compliance Information 38

# What's In the Box

EN

- iRobot Braava jet™ Robot
- Lithium Ion Battery
- Battery Charger
- iRobot Braava jet Cleaning Pads (type and quantity of cleaning pads may vary by model)
    - (2) Wet Mopping Pads (Blue)
    - (2) Damp Sweeping Pads (Orange)
    - (2) Dry Sweeping Pads (White)





EN

Pad and battery quantities may vary by model

# Robot Anatomy



EN

## Top View - Front

EN

## Top View - Back

# Robot Anatomy

EN

## Bottom View

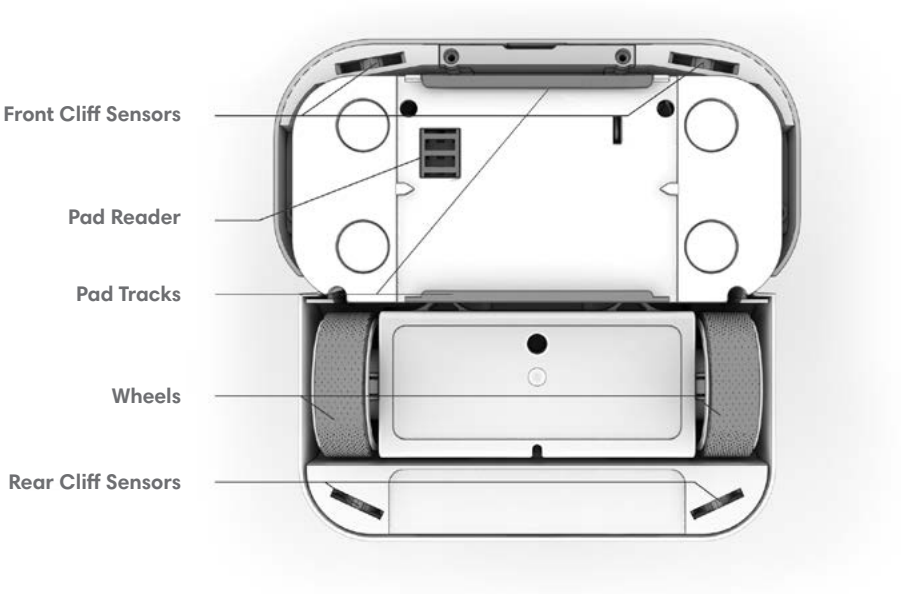




iRobot Braava jet

EN

## iRobot Braava jet Cleaning Pads

**Wet Mopping (Blue)**

**Damp Sweeping (Orange)**

**Dry Sweeping (White)**

**Washable Wet Mopping (Blue)**

(Included with select models. Also available for purchase as an accessory.)

EN

Follow these simple steps to get started with your Braava jet™ Mopping Robot.

## 1 Charge & Insert the Battery

- Remove the battery and put it in the battery charger.
- The indicator light will blink amber while the battery is charging. The light will switch to solid green when the battery is fully charged.
- The wall charger automatically goes into low-power mode when the battery is fully charged to maintain the life of the battery and limit power usage.
- The battery will fully charge within 2 hours.
- Insert the fully charged battery into the robot.

**Battery Tip #1:** For best results in rooms with a lot of furniture fully charge the battery for 2 hours before using the robot.

**Battery Tip #2:** iRobot also offers additional batteries and chargers as accessories for purchase, so you can always have a charged battery ready to go.

EN

**Charge**

**Insert**

EN

## 2 Select a Braava jet Cleaning Pad

- Choose a cleaning pad that matches how you want to clean your floor.
- Your robot comes with a sample pack of Wet Mopping, Damp Sweeping, and Dry Sweeping Braava jet cleaning pads.
- Braava jet will automatically recognize the pad and adjust its cleaning behavior based on the pad you choose.

**Cleaning Tip:** Before using a Wet Mopping or Damp Sweeping pad, use a Dry Sweeping pad or vacuum to clean loose debris.

EN

| | | Pad Type | Cleaning Motion and Wetness Level |
|---|---|---|---|
| **Wet Mopping (Blue)** | | | Cleaning Agent |
| **Damp Sweeping (Orange)** | | | Cleaning Agent |
| **Dry Sweeping (White)** | | | |
| **Washable Wet Mopping (Blue)** | | | |

(Included with select models. Also available for purchase as an accessory.)

EN

## 3 Slide in a Cleaning Pad

- Slide a Braava jet pad into the track on the bottom of the robot until it clicks into place.
- You can attach a Braava jet pad from either side of the robot.

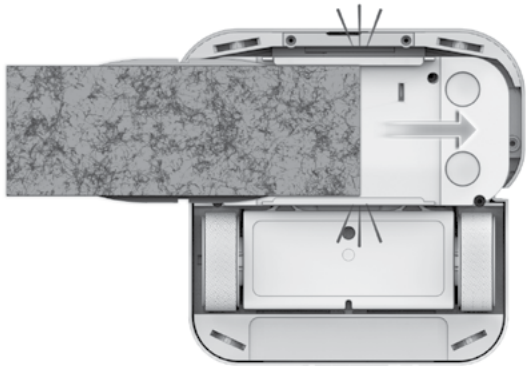

EN

## 4 Fill the Robot with Water

- Fill the robot if you choose Wet Mop or Damp Sweep.
- Lift the robot handle to find the tank cap and lift and swivel it open.
- Slowly fill the tank to the top with warm water.
- Turn the cap back and close. Lower the robot handle before starting the robot.
- Do not use any other cleaning solution with your robot other than water.

**Cleaning Tip:** For easier filling, tilt the robot downward and fill slowly with water.

**Note: If you are using a Dry Sweeping Pad, skip to Step 5.**

EN

## 5 Just Press CLEAN

- Place your robot in the lower left corner of the area you want to clean, about a foot away from any walls.
- Press CLEAN once to wake up the robot. Press CLEAN again to start the cleaning cycle.
- The robot will clean up to 150 $ft^2$ while mopping, and up to 200 $ft^2$ while damp or dry sweeping.*
- Braava jet will finish by cleaning the edges and perimeters of your room, furniture and toilets.

**Cleaning Tip:** When it has finished cleaning, Braava jet returns to where it started and powers off.

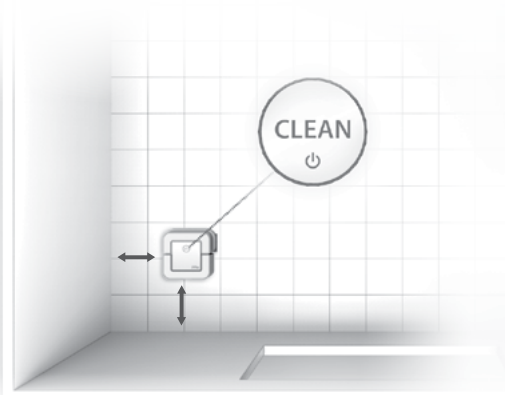


*Tested in iRobot's Home Test Lab on hard floors.

EN

See **How iRobot Braava jet Cleans** section for more details on placement and cleaning pattern behavior.

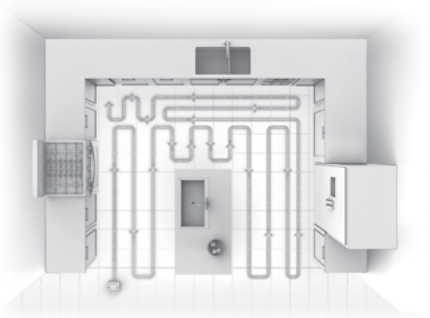

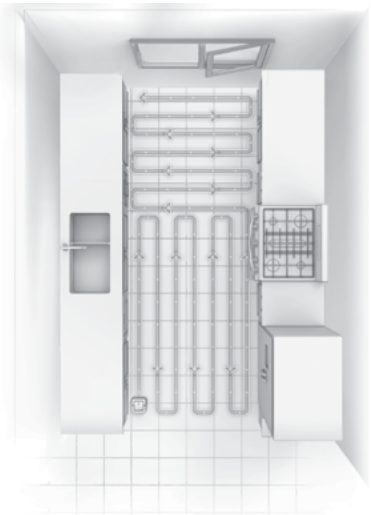

EN

## 6 Eject the Cleaning Pad and Prepare iRobot Braava jet for Next Use

- To eject the cleaning pad without touching the dirt, lift the handle and pull back on the Pad Eject Button. Disposable cleaning pads can be dropped directly into the trash and Washable Cleaning Pads (sold separately) can be dropped into the laundry bin.
- Remove the battery and put it in the wall charger so it can charge for the next cleaning.
- Empty the water tank before storing the robot.
- Braava jet can be stored wheels-down or on its side with the battery side down.

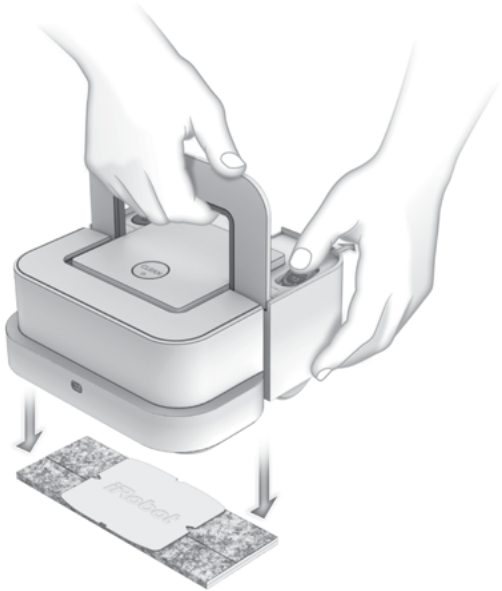


EN

# Choosing the Right Braava jet™ Pad

iRobot Braava jet™

EN

Choose the right cleaning pad for your cleaning needs.

| | | OVERVIEW | | RECOMMENDED FOR | | | | |
|---|---|---|---|---|---|---|---|---|
| | | Pad Type | Cleaning Motion and Wetness Level | Fresh Scent | Dust | Hair | Dirt | Sticky Spots* |
| **Wet Mopping (Blue)** | | | Cleaning Agent | ● | | | ● | ● |
| **Damp Sweeping (Orange)** | | | Cleaning Agent | ● | ● | | ● | |
| **Dry Sweeping (White)** | | | | ● | ● | ● | ● | |
| **Washable Wet Mopping (Blue)** (Included with select models. Also available for purchase as an accessory.) | | | | | | | ● | ● |

*Tested on dried coffee and soda.

EN

# How iRobot Braava jet™ Cleans

EN

Braava jet is designed to intelligently navigate and clean typical kitchens and bathrooms each time it runs, up to 150 $ft^2$ while wet mopping and up to 200 $ft^2$ while damp and dry sweeping.*

### Where to Place the Robot in a Room

Place the robot in the lower left of the area you want it to clean.
The robot will systematically clean the area to the right and in front of where it started.

- The robot will start by cleaning to the right until it encounters a wall or other barrier.
- When the robot has cleaned as far as it can to the right, the robot will continue to the area in front and to the right of where it started.
- The robot will stop cleaning and will return to where it started once it has cleaned an entire enclosed space or has cleaned up to 150 $ft^2$ while wet mopping or up to 200 $ft^2$ while damp and dry sweeping.

*Tested in iRobot's Home Test Lab on hard floors in damp/dry mode.





EN

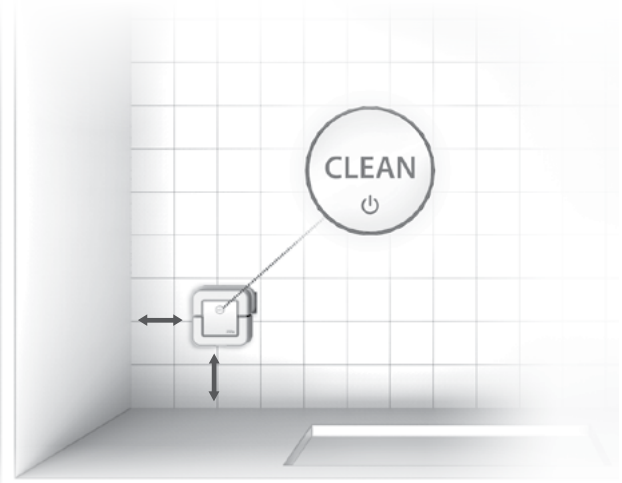

# How iRobot Braava jet™ Cleans

EN

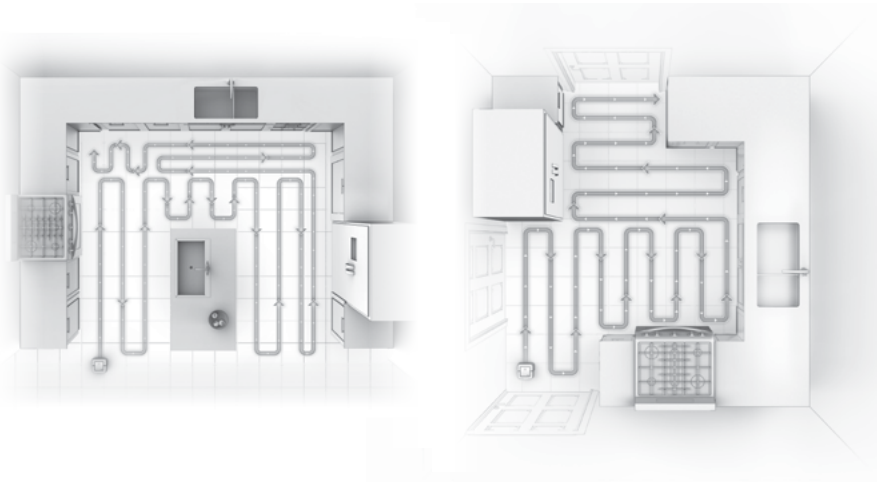

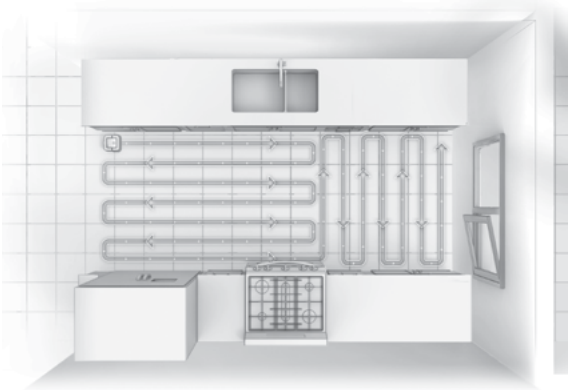

EN

# How iRobot Braava jet™ Cleans

EN

- Braava jet does not spray furniture or walls. Before the robot sprays, it will back up to ensure it's only spraying a portion of the floor it knows is clear.
- As Braava jet finds edges, chair legs, and other obstacles, it will clean around them and then return to its original path and resume cleaning.
- After Braava jet has cleaned the entire space, it finishes the job by cleaning along edges, walls, furniture, and other obstacles a second time.
- Once Braava jet finishes its cleaning job, it returns to where it started, plays a tone so you know it's done, and powers off.
- Braava jet creates a new map every time it cleans.





EN

## iRobot Braava jet adjusts its cleaning pattern based on the cleaning pad you choose.

- When you attach a **Braava jet Wet Mopping Pad or Washable Wet Mopping Pad (blue)**, Braava jet mops your floors with triple-pass coverage, moving similarly to how you would mop yourself. The robot drives forward a short distance to one side, backs up slightly, then moves forward to the other side. It alternates to the left and right as it progresses through the room, providing triple-pass coverage of each section of your floor.

- With a **Braava jet Damp Sweeping Pad (orange)**, Braava jet cleans your floors with gentle yet thorough double-pass cleaning. It first drives forward a short distance and then backs up in a straight line, continuing this back and forth pattern as it cleans the area.

- When you attach a **Braava jet Dry Sweeping Pad (white)**, Braava jet swiftly moves forward in a straight line for single-pass coverage of the area.

EN

## Creating an Invisible Barrier

You can create an invisible barrier with the Virtual Wall® Mode so that the robot will avoid cleaning part of a room or a different floor type.

- Begin with the robot powered off. When placing the robot, note that the invisible line will be created in line with the back of the robot.
- To activate Virtual Wall Mode, start with a powered-off robot and press and hold the CLEAN button until two blue lines appear on the top of the robot. The blue lines will indicate that the Virtual Wall Mode has been activated.
- Once in Virtual Wall Mode, the robot will mark an invisible boundary in its internal map, extending out to each side (see illustration). As the robot cleans your floor, it will not go beyond the invisible line.
- Once the robot is in place, just press CLEAN to start the job.
- Virtual Wall Mode will turn off automatically when the robot completes its job. To manually clear a Virtual Wall Mode cleaning cycle and turn off the robot, press and hold the CLEAN button until all indicators turn off.

**Cleaning Tip:** You can also use Virtual Wall Mode to divide a larger room into smaller areas to help Braava jet clean more efficiently.

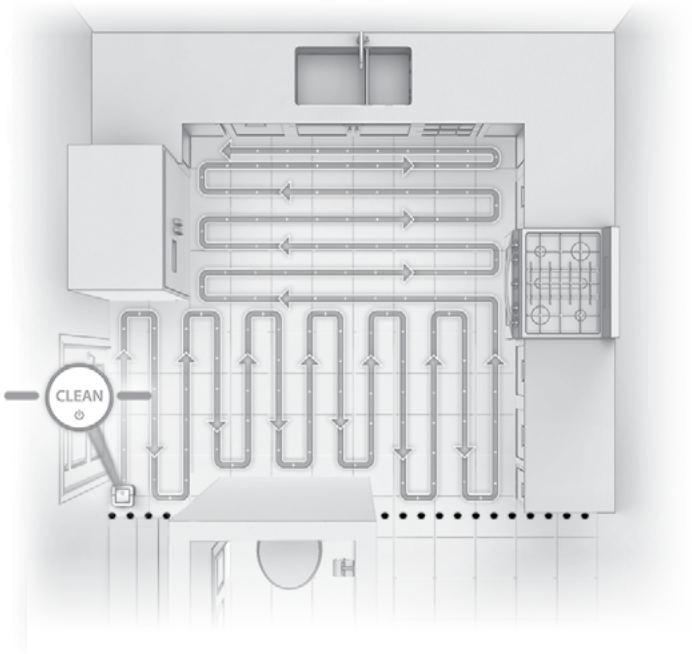


EN

# Tips for Best Performance

EN

## General Cleaning Tips

- For best results, use a Dry Sweeping Pad or vacuum to pick up dirt and dust before running your robot with a Wet Mopping or Damp Sweeping Pad.
- To pause your robot during a cleaning cycle, press the CLEAN button. To resume the cleaning cycle, press the CLEAN button again.
- Do not pick up and move your robot while it is cleaning – the robot will end its cleaning run if you do.
- Always fill Braava jet to the top with water and check for any air bubbles before closing the tank cap.
- Only use water inside your robot. Cleaning solutions, even natural ones, can clog the spray nozzle and break down the materials inside the robot.
- Your robot will only run with Braava jet Pads, which are specifically made for the robot.
- Braava jet cleans best on smooth hard surfaces and may not perform as well on uneven tiles, heavily waxed floors or rough surfaces like slate or brick which may snag the cleaning pads.



EN

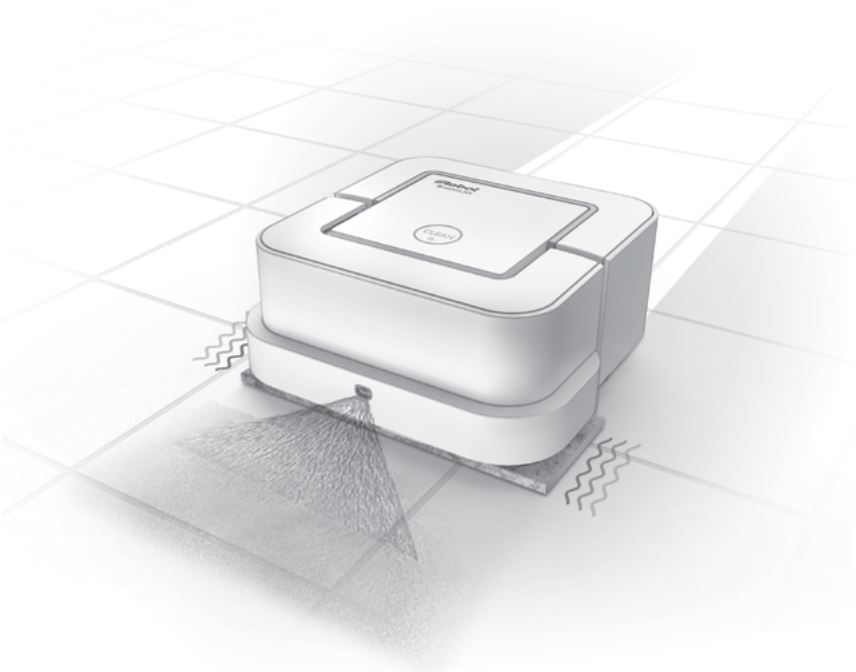

# Troubleshooting

EN

Braava jet will tell you something is wrong by alerting you with sounds and lights. If the problem is not resolved, learn more online at www.irobot.com/support or contact Customer Service at (877) 855-8593.

## Repeating Error Messages

If your robot remains on after an error occurs, press the bumper toward the body of the robot once to repeat the message. If your robot has turned off after an error occurs, press CLEAN to turn it on. If the error is ongoing, the robot will repeat the message. Visit www.irobot.com/support to view a complete error table.

## Rebooting Instructions

For some errors, rebooting Braava jet may resolve the problem. To reboot Braava jet, press and hold CLEAN for 10 seconds until you hear an audible tone. Take out the battery and insert it again. Press CLEAN again to turn the robot back on.

EN

## Precision Jet Spray Troubleshooting

If the robot is not spraying or is spraying unevenly and you have checked that the tank has enough water and can hear the pump running, contact Customer Service at (877) 855-8593.

## Water Level Troubleshooting

If you encounter problems with the amount of water Braava jet uses on your floors in wet mopping or damp sweeping modes, contact Customer Service at (877) 855-8593.

# Regular Robot Care

EN

Follow these tips to keep your iRobot Braava jet running at peak performance.

## Cleaning the Cliff Sensors and Pad Reader

Clean the sensors on the bottom of your robot with a damp cloth.

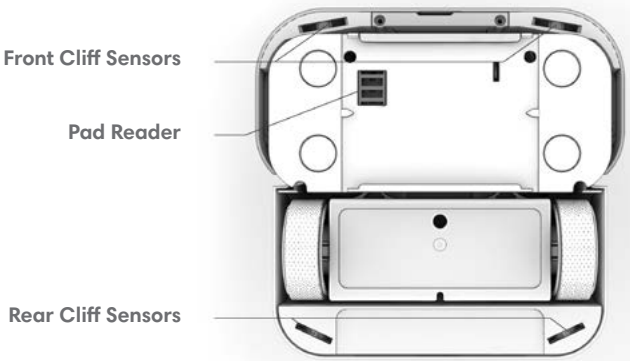






EN

## Cleaning the Wheels

Pull off any visible debris or hair that gathers around the wheels.

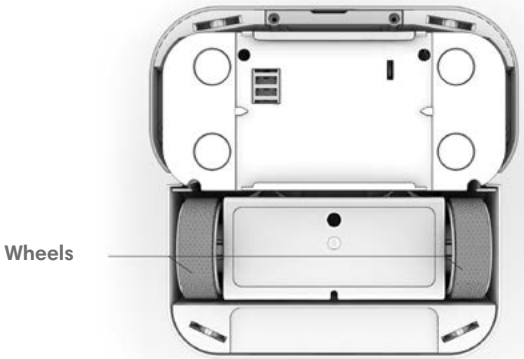

# Regular Robot Care

EN

## Cleaning the Body of the Robot

Use a damp cloth to lightly wipe off any dirt on its body or bumper.

EN

## Cleaning the Precision Jet Spray Nozzle

Wipe clean with a damp cloth.

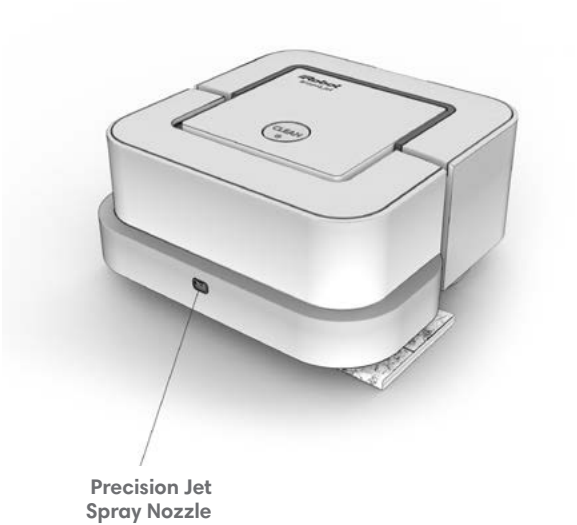

# Regular Robot Care

EN

## Cleaning the Tank

If you notice an odor in the tank, fill the tank with hot tap water.
Do not use boiling water. Close the cap and lightly shake the robot. Rinse the tank and repeat. Allow the tank to dry with the cap open before using your robot.

EN

## Caring for Washable Cleaning Pads (sold separately)

After using washable cleaning pads to clean, hand washing and air drying is recommended for regular maintenance. The cleaning pad can be washed up to 50 times* before replacing. If using a washing machine, wash on warm cycle and air dry. Do not wash with delicates.

*Tested in washing machine. Do not wash with delicates.

# Safety and Compliance Information



EN

THIS APPLIANCE CAN BE USED BY CHILDREN AGED FROM 8 YEARS AND ABOVE AND PERSONS WITH REDUCED PHYSICAL, SENSORY OR MENTAL CAPABILITIES OR LACK OF EXPERIENCE AND KNOWLEDGE IF THEY HAVE BEEN GIVEN SUPERVISION OR INSTRUCTION CONCERNING USE OF THE APPLIANCE IN A SAFE WAY AND UNDERSTAND THE HAZARDS INVOLVED. CHILDREN SHALL NOT PLAY WITH THE APPLIANCE. CLEANING AND USER MAINTENANCE SHALL NOT BE MADE BY CHILDREN WITHOUT SUPERVISION.

CAUTION: DO NOT EXPOSE THE ELECTRONICS OF BRAAVA JET, ITS BATTERY, OR ITS BATTERY CHARGER. THERE ARE NO USER-SERVICEABLE PARTS INSIDE. REFER SERVICING TO QUALIFIED SERVICE PERSONNEL. PLEASE ENSURE VOLTAGE RATING FOR ENCLOSED BATTERY CHARGER MATCHES STANDARD OUTLET VOLTAGE.

EN

To reduce the risk of injury or damage, keep these safety precautions in mind when setting up, using, and maintaining your robot:

## General Safety Instructions

- Retain the safety and operating instructions for future reference.
- Read all safety and operating instructions before operating your robot.
- Heed all warnings on your robot, battery, battery charger, and in the owner's guide.
- Follow all operating and use instructions.
- Be aware that floors may be slippery after wet cleaning with Braava jet.
- Braava jet operates quietly. Take care when walking in the area the robot is cleaning to avoid stepping on it and tripping.
- Refer all non-routine servicing to iRobot.

EN

### The symbol on the product or its packaging indicates:

Do not dispose of electrical appliances as unsorted municipal waste, use separate collection facilities. Contact your local authority for information regarding the collection systems available. If electrical appliances are disposed of in landfills or dumps, hazardous substances can leak into the groundwater and get into the food chain, damaging your health and well-being. When replacing old batteries, please contact your local or regional waste authority for more information on collection, reuse and recycling programs.

EN

### Use Restrictions

- Your robot is for indoor use on hard surface floors only.
- Your robot is not a toy. Do not sit or stand on this device. Small children and pets should be supervised when your robot is operating.
- Braava jet has electrical parts. Do not submerge it in water. Clean with a cloth dampened with water only.
- Do not use this device to pick up anything that is burning or smoking.
- Do not use this device to pick up large debris, bleach, paint, or other chemicals.
- Before using Braava jet, remove fragile objects from the cleaning area, including objects on furniture that can fall if the furniture is pushed or bumped.
- Move any power cords as well as cords for blinds and curtains out of the way to reduce the risk of objects being pulled down.
- If the room to be cleaned contains a balcony, a physical barrier should be used to prevent access to the balcony and ensure safe operation.
- Make sure a cleaning pad is attached for safe operation.
- When wet cleaning, do not use Braava jet in areas where wetness can damage unfinished or unsealed floors or delicate carpeting or rugs.
- Operate and store your robot in room temperature environments only.
- Children should be supervised to ensure they do not play with the robot. Cleaning and maintenance should not be performed by children without supervision.
- Do not place anything on top of your robot.
- Do not operate the robot in areas with exposed electrical outlets in the floor.

## Battery and Charging

- Before every use, check the battery pack for any sign of damage or leakage. Do not charge damaged or leaking battery packs.
- Charge indoors only.
- Only use the included battery charger to charge the iRobot Braava jet battery.
- Charge using a standard outlet only. Product may not be used with any type of power converter. Use of other power converters will immediately void the warranty.
- Please ensure voltage rating for enclosed battery charger matches standard outlet voltage.
- Never handle the battery charger with wet hands.
- Only use rechargeable battery packs with the correct specifications supplied with your robot by iRobot (model number 4446040).
- For replacement battery pack, visit www.irobot.com.
- Always charge and remove the battery from your robot before long-term storage or transportation.
- Always remove battery pack before cleaning your robot.
- Keep battery pack clean and dry. Wipe the cell or battery terminals with a clean dry cloth if they become dirty.



- Do not crush, dismantle or shred battery packs.
- Do not subject cells or batteries to mechanical shock.
- Do not heat the battery pack or place the battery pack near any heat source.
- Do not store in direct sunlight.
- Do not incinerate the battery pack.
- Do not short-circuit the battery pack.
- Do not submerge the battery pack in any liquid.
- The battery pack must be removed from the robot before disposal.
- When disposing of the battery pack, contact your local or regional waste authority for more information on collection, reuse and recycling programs.
- In the event of cell leaking, do not allow the liquid to come in contact with the skin or eyes. If contact has been made, wash the affected area with copious amounts of water and seek medical advice.
- If you need to ship your Braava jet™ lithium ion battery for any reason, contact Customer Care for shipping instructions and appropriate labels. Never ship a leaking or physically damaged lithium ion battery.

# Safety and Compliance Information

EN

For EU Declaration of Conformity information, visit www.irobot.com/compliance.

## ~~FCC Compliance Information:~~

- This device complies with part 15 of the FCC Rules. Operation is subject to the following two conditions: (1) This device may not cause harmful interference, and (2) this device must accept any interference received, including interference that may cause undesired operation.
- This device complies with Industry Canada license-exempt RSS standard(s). Operation is subject to the following two conditions: 1) This device may not cause interference, and 2) this device must accept any interference, including interference that may cause undesired operation of the device.
- Changes or modifications not expressly approved by iRobot Corporation could void the user's authority to operate the equipment.

EN

- This equipment has been tested and found to comply with the limits for a Class B digital device, pursuant to part 15 of the FCC Rules as well as ICES-003 Rules. These limits are designed to provide reasonable protection against harmful interference in a residential installation. This equipment generates, uses and can radiate radio frequency energy and, if not installed and used in accordance with the instructions, may cause harmful interference to radio communications. However, there is no guarantee that interference to radio communication will not occur in a particular installation. If this equipment does cause harmful interference to radio or television reception, which can be determined by turning the equipment off and on, the user is encouraged to try to correct the interference by one or more of the following measures:
  - Reorient or relocate the receiving antenna.
  - Increase the separation between the equipment and receiver.
  - Connect the equipment into an outlet on a circuit different from that to which the receiver is connected.
  - Consult the dealer or an experienced radio/TV technician for help.
- Under Industry Canada regulations, this radio transmitter may only operate using an antenna of a type and maximum (or lesser) gain approved for the transmitter by Industry Canada. To reduce potential radio interference to other users, the antenna type and its gain should be so chosen that the equivalent isotropically radiated power (e.i.r.p.) is not more than the necessary for successful communication.

iRobot®

©2016 iRobot Corporation, 8 Crosby Drive, Bedford, MA 01730 USA. All rights reserved. iRobot and Virtual Wall are registered trademarks of iRobot Corporation. Braava jet is a trademark of iRobot Corporation.

WC: 4491844 v3