SPECIFICATIONS MANUAL

OPH-5000i

Handy Terminal with Bluetooth

This manual provides specifications for the OPH-5000i Wireless LAN Handy Terminal with imager scanner.

1st

OPTICON

The information in this document is subject to change without notice.

Document History

Model Number:	OPH-5000i	Specification Number:	SS16051
Edition:	1st	Original Spec Number:	(SS16003)
Date:	01-September-2016		

2016 Copyright Opticon. All rights reserved.

This manual may not, in whole or in part, be copied, photocopied, reproduced, translated or converted to any electronic or machine readable form without prior written consent of Opticon.

Limited Warranty and Disclaimers

PLEASE READ THIS MANUAL CAREFULLY BEFORE INSTALLING OR USING THE PRODUCT.

Serial Number

A serial number appears on all Opticon products. This official registration number is directly related to the device purchased. Do not remove the serial number from your Opticon device. Removing the serial number voids the warranty.

Warranty

Unless otherwise agreed in a written contract, all Opticon products are warranted against defects in materials and workmanship for two years after purchase excluding batteries. Opticon will repair or, at its option, replace products that are defective in materials or workmanship with proper use during the warranty period. Opticon is not liable for damages caused by modifications made by a customer. In such cases, standard repair charges will apply. If a product is returned under warranty and no defect is found, standard repair charges will apply. Opticon assumes no liability for any direct, indirect, consequential or incidental damages arising out of use or inability to use both the hardware and software, even if Opticon has been informed about the possibility of such damages.

Packaging

The packing materials are recyclable. We recommend that you save all packing material to use should you need to transport your data collector or send it for service. Damage caused by improper packaging during shipment is not covered by the warranty.

Trademarks

Trademarks used are the property of their respective owners.

Opticon Inc. and Opticon Sensors Europe B.V. are wholly owned subsidiaries of OPTOELECTRONICS Co., Ltd., 12-17, Tsukagoshi 4-chome, Warabi-shi, Saitama, Japan 335-0002. TEL +81-(0) 48-446-1183; FAX +81-(0) 48-446-1184

SUPPORT

USA

Phone: 800-636-0090
Email: support@opticonusa.com
Web: www.opticonusa.com

Europe

Email: support@opticon.com
Web: www.opticon.com

Revision History

Product Name : OPH-5000i

Edition	Date	Page	Section	Description of Changes
1st	2016/09/01	-	-	-

Contents

1 Abstract 6
2 Overview 6
3 Basic Specifications 7
4 Detailed View 10
5 Electrical Specifications 13
5.1 Electrical Specifications 13
5.2 Wireless Charging 13
6 Interface Specifications 13
6.1 USB Interface 13
6.1.1 Connector 13
6.1.2 USB Interface Circuit 13
6.2 Bluetooth 14
6.3 Wireless LAN 14
6.3.1 IEEE 802.11b 14
6.3.2 IEEE 802.11g 14
6.3.3 IEEE 802.11n 14
6.4 Built-in NFC Tag 14
7 Optical Specifications 15
7.1 Basic Specifications 15
7.2 Aiming Pattern 16
8 Technical Specifications 17
8.1 Barcode Test Sample 17
8.2 Scan Area and Depth of Field 19
8.3 Printed Contrast Signal (PCS) 20
8.4 Minimum Resolution 20
8.5 Barcode Width 20
8.6 Pitch, Skew and Tilt 21
8.7 Curvature 21
8.8 Motion Tolerance 22
9 Environmental Specifications 23
9.1 Temperature 23
9.2 Humidity 23
9.3 Ambient Light Immunity 23
9.4 Dust and Drip Proof 24
9.5 Vibration Strength (without packing) 24
9.6 Vibration Strength (in individual packing) 24
9.7 Drop Impact Strength (without packaging) 24
9.8 Drop Impact Strength (in individual packaging) 25
9.9 Electrostatic Discharge Immunity 25
10 Regulatory Compliance 26

10.1 LED Safety 26
10.2 Product Safety 26
10.3 EMC 26
10.4 Other 28
11 RoHS 28
12 Reliability 28
13 Precautions 28
13.1 Radio Law 29
13.2 Bluetooth 29
13.3 Frequency Baud 29
13.4 Usage Note 29
14 Product Labels 30
15 Packaging Specifications 31
15.1 Individual Packaging 31
15.2 Collective Packaging 33
16 Physical Features 34
16.1 Dimensions 34
16.2 Weight 34
16.3 Mechanical Drawing 34
17 Supported Symbologies 35
17.1 Default Setting 35
17.2 Supported Symbologies 35
17.2.1 1D Barcodes 35
17.2.2 GS1 Databar, Composite Code 36
17.2.3 2D Codes 36

Table of Figures

Figure 1: Detailed View 11
Figure 2: micro USB B Connector 13
Figure 3: Interface Circuit (USB) 13
Figure 4: Aiming Pattern and Imaging Range 16
Figure 5: Scan Area and Depth of Field 19
Figure 6: Wide Barcode 20
Figure 7: Pitch, Skew and Tilt 21
Figure 8: Curvature 21
Figure 9: Motion Tolerance 22
Figure 10: Drop Test 24
Figure 11: Product Label Position 30
Figure 12: Individual Packaging 31
Figure 13: Collective Packaging 33
Figure 14: Mechanical Drawing 34

1 Abstract

This manual provides specifications for the OPH-5000i 2D Handy Terminal with built-in Wireless LAN and Bluetooth.

2 Overview

The OPH-5000i is compact imager scanner built-in and output scanned barcode and 2D code data to hostdevice conected by TCP/IP via wiress LAN. Bluetooth is also aveliable for output.

- OPH-5000i is handy terminal with a numeric keypad and TFT color LCD display.
- All barcode data scanned is transmitted to a host device through the Wireless LAN, Bluetooth or USB interface interface.
- Wireless LAN supports IEEE 802.11 b/g/n.
- Bluetooth SPP (Serial Port Profile) and HID (Human Interface Device Profile) are implemented.
- In addition to the current buzzer sound and LED display, vibration function is also equipped.
- A green LED aiming line toward a target barcode can help the users find the appropriate scanning position.
- Alcohol can be used to wipe the scanner clean
- The power source is 3.7 V 1100 mAh (typ.) Li-ion battery.
- The charging is done through a dedicated charging cradle or USB interface.
- The scanner is Apple MFi certified.

3 Basic Specifications

Item		Specification		Note
Control Section	CPU	32bit CISC/96MHz		
	FROM	2Mbyte + 32KByte		System area
	FROM	1Mbyte		Application area
	RAM	16Mbyte		It may be cleared by the removal of the main battery.
	FROM (storage)	128Mbyte		For data area only
Input Section	Key type	Number	10 key	
		F1~F3	3 key	
		Power	1 key	
		Up, down, SCAN (Placed on top panel)	3 key	
		SHIFT, BS, CLEAR, decimal point, ENT	5 key	
	Side touch sensor	1 sensor for scan		
	Backlight	White		
Display Section	Display element	TFT color LCD display		
	Backlight	White, brightness adjustable		
	Display size	1.77 inch, (W)128× (L)128 dots		
	Font size	12/16/24 dot		
	Type of characters	JIS Standard No.1 and 2, ANK		
	Structure of Characters	When in 12 dot Font mode (digit × row) Reduced-size ANK: 21×21 Half-size character: 21×10 Kanji character: 10×10 When in 16 dot Font mode (digit × row) Reduced-size ANK: 16×16 Half-size character: 16×8 Kanji character: 8×8 When in 24dot Font mode (digit × row) Reduced-size ANK: 10×10 Half-size character: 10×5 Kanji character: 5×5		
	LED	red, green one place, and blue 1 place		
	Buzzer	Loudness (3-level) / tone adjustable		
	Vibration motor	Strength (3-level) / duration adjustable		
RTC	Contents	Year, month, date, hour, minute, second		Data and time are lost when the main battery is removed.
	Accuracy	± 90 seconds per month		
Interface	Wireless LAN	Specification	IEEE 802.11 b/g/n compliant	
		Frequency	2412~2472MHz (1~13ch)	
		Maximum output	0.0026W/MHz	IEEE 802.11b
		Access method	Infrastructure mode (STA)	
		Security	WEP,WPA,WPA2	

Item			Specification		Note
			Network stack	TCP/IP, UDP, DHCP, ARP, SSL, DNS	
	Bluetooth		Frequency	2402 ~ 2480 MHz	
			Specification	Bluetooth Ver 2.1 compliant	
			Communication distance	10 m	Not guaranteed.
			Output level	Class 2	Max output 4 dBm
			Profile	SPP / HID	
	Built-in NFC tag		ISO/IEC 14443 TYPE A, TYPE B JISX6319-4		
	USB		・Full-Speed 12Mbps (HID/COM) ・Hi-Power Bus-powered supported		
Optical Section	Scanning method		VGA CMOS area sensor		
	Scanning light source		1 Warm-White LED		
	Aiming light source		1 green LED		
	Effective pixels		0.30 million pixels		
	View angle		Horizontal: about 38.0° Vertical: about 28.9°		
Supported 1D Symbologies	Symbologies		UPC-A, UPC-A Add-on, UPC-E, UPC-E Add-on, EAN-13, EAN-13 Add-on, EAN-8, EAN-8 Add-on, JAN-8, JAN-13, Code 39, Tri-Optic, NW-7, Industrial 2 of 5, Interleaved 2 of 5, S-Code, IATA, Code 93, Code 128, MSI/Plessey, UK/Plessey, TELEPEN, Matrix 2 of 5, Chinese Post Matrix 2 of 5, Code 11, Korean Postal Authority code, Postal Code		Refer to Chapter 17. for details
	Minimum resolution		Code 39 : 0.1 mm		PCS 0.9
	Curvature		R ≥ 16 mm (9-digit JAN) R ≥ 20 mm (13-digit JAN)		PCS 0.9
	Barcode width		100 mm wide 0.2 mm resolution Code 39 (DOF 150 mm) is readable:		
	Motion Tolerance		UPC 100% moving at 2m/sec (DOF 100 mm) is readable:		
	Depth of Field	Code 39	Resolution (0.127)	90 ~ 110	
			Resolution (0.254)	65 ~ 185	
			Resolution (0.508)	65 ~ 260	
		Code 128	Resolution (0.2)	85 ~ 165	
		UPC	Resolution (0.33)	55 ~ 195	
GS1/Composite	Symbologies		GS1 DataBar , GS1 DataBar Limited, GS1 DataBar Expanded, Composite GS1 DataBar, Composite GS1-128, Composite EAN, Composite UPC		GS1 DataBar: formerly called “RSS”
	Minimum resolution		GS1 DataBar : 0.169mm Composite Code: 0.169mm		
Supported 2D Symbologies	Symbologies		PDF417 , MicroPDF417 , Codablock F , QR Code , MicroQR Code , Data Matrix (ECC 0 - 140 / ECC 200) , MaxiCode(Modes 2 to 5) , Aztec Code , Chinese-sensible code		Disable Code 128 when Codablock F is enabled.

Item			Specification		Note
	Minimum resolution (mm)		PDF417 : 0.169 mm QR Code : 0.169 mm DataMatrix : 0.169 mm		PCS 0.9
	Depth of field (mm)	PDF417	Resolution (0.169)	85~ 135	PCS 0.9
			Resolution (0.254)	65 ~ 180	
		QR Code	Resolution (0.212)	90 ~ 110	
			Resolution (0.381)	55 ~ 180	
		DataMatrix	Resolution (0.254)	85 ~ 135	
Common	Scan angle		Pitch : ±70°		
			Skew : ±70°		
			Tilt : ±360°		
	Minimum PCS		0.2 or more		MRD 32% or more
Power Section	Main battery		Lithium-ion 1100 mAh (typ.)		
	Up-time		20 hours or more		*1
	Charging time		Less than 3 hour		Using dedicated cradle. Room temperature 25℃
	Feeding system		Electromagnetic guidance wireless charging, microUSB		
	Operating (charging) voltage		4.5 ~ 5.5V		Charging with USB
	Current consumption	Charging	Less than 500 mA		
Environmental Specifications	Temperature	Operating	-10 ~ 50°C		
		Storage	-20 ~ 60°C		
	Humidity	Operating	20 ~ 85%		No condensing No frost
		Storage	20 ~ 85%		
	Ambient light immunity	Fluorescent	10,000 lx or less		UPC 100% Optical axis angle 75° Distance: 100mm
		Sunlight	100,000 lx or less		
	Vibration		10 Hz ~ 100 Hz, acceleration of 19.6 m/s^2, 60 minutes per cycle, repeat in each X, Y and Z-direction		
	Drop		Drop the scanner 18 times (6 faces x 3) from a height of 150 cm onto a concrete floor		
	Dust and drip proof		IP54 equivalent		
Regulatory Compliance	LED safety		JIS C 6802:2011 Class2 IEC 60825-1 Ed.2: 2007 Class 2 CDRH Class Ⅱ		
	Product safety		EN60950-1:2005 IEC60950-1:2006		
	EMC		EN 55024:2010 EN 55032:2012+AC: 2013 EN 301 489-1 V1.9.2 EN 301 489-17 V2.2.1 EN 300 328 V1.9.1 EN 302 291-2 V1.1.1 FCC Part 15 Subpart C, Subpart B Class A VCCI Class A		For residential, commercial and light-industrial environments
	European conformity		CE Marking		

Item			Specification	Note
			Certification for Construction Design of Specified Radio Equipment	
	Other		Bluetooth logo certification MFi license	
Immunity Test	ESD	No distraction	Air discharge (direct): ±15 kV	Conditions: IEC61000-4-2 compliant
		No malfunction	Air discharge (direct): ±8 kV	
Physical Features	Dimensions		136 × 44 × 30.3(22) (WDH mm)	() is grip dimension Not include projection
	Weight		Approx. 120 g	Excluding accessories Including main battery

*1: When a barcode is read twice every 10 seconds at room temperature 25℃.

4 Detailed View

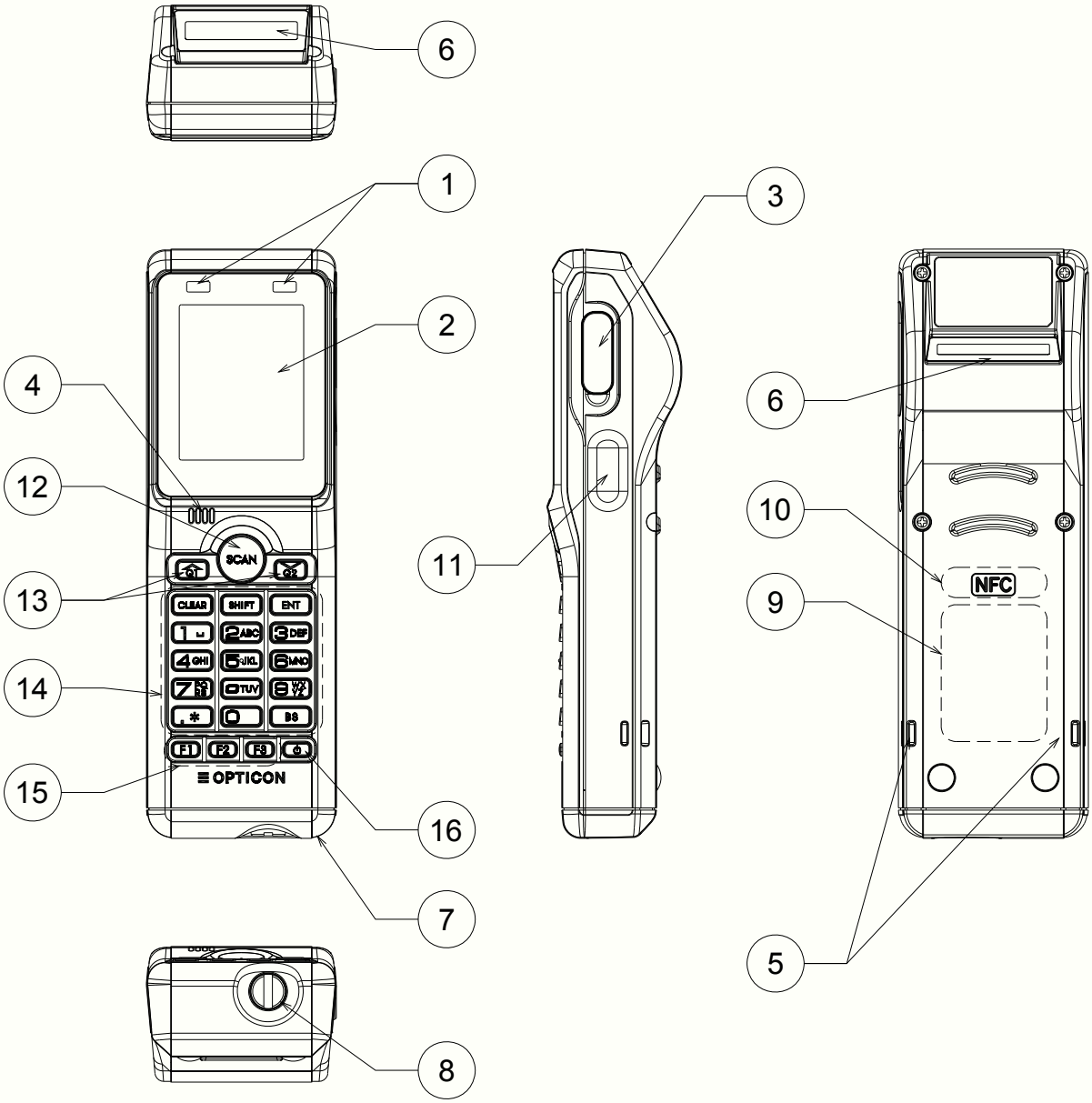

Figure 1: Detailed View

No	Name	Description
1	LED	Indicates operational status, such as scanning and communication. It is able to be controlled by user's programs.
2	LCD	Indicates scanned barcodes and operational items.
3	MicroUSB Connecter Cap	MicroUSB connector is stored.
4	Buzzer Orifice	Holes for buzzer.
5	Strap Orifice	Holes for attaching a hand strap.
6	Scan Window	LED illumination is emitted from this window to read barcodes.
7	Battery Cover	Rechargeable battery is stored.
8	Battery Cover Lock	Used to lock / open the battery cover.
9	Charging Coil	The charging coil is located here with which the dedicated cradle can supply power to the scanner.
10	NFC	This is the location of the NFC tag. Hold an NFC reader close to this area when the tag has to be read.
11	Side Trigger Sensor	Start an operation of reading code by touching.
12	Trigger Key	Press when reading code.
13	Up and Down Key	Key use for selecting item and moving cursor.
14	Numeric Keypad	Numeric, enter, decimal point key and the key's to support these inputs.
15	F1, F2, F3	Function key.
16	Power Key	Power On/Off key.

5 Electrical Specifications

5.1 Electrical Specifications

Supply Voltage	: 4.5-5.5V
Bus-power (Class)	: Hi-Power (500mA max)
Current consumption	: Less than 500mA

5.2 Wireless Charging

Feeding system	: Electromagnetic induction
Power consumption	: Less than 5W

6 Interface Specifications

The OPH-5000i interface is selectable from three types; USB / Bluetooth and Wireless LAN.

6.1 USB Interface

Interface is Full Speed USB interface.

6.1.1 Connector

Signal Name	Contact Number
VCC	1
DATA(-)	2
DATA(+)	3
(NC)	4
GND	5

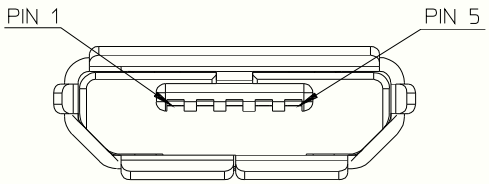

Figure 2: micro USB B Connector

6.1.2 USB Interface Circuit

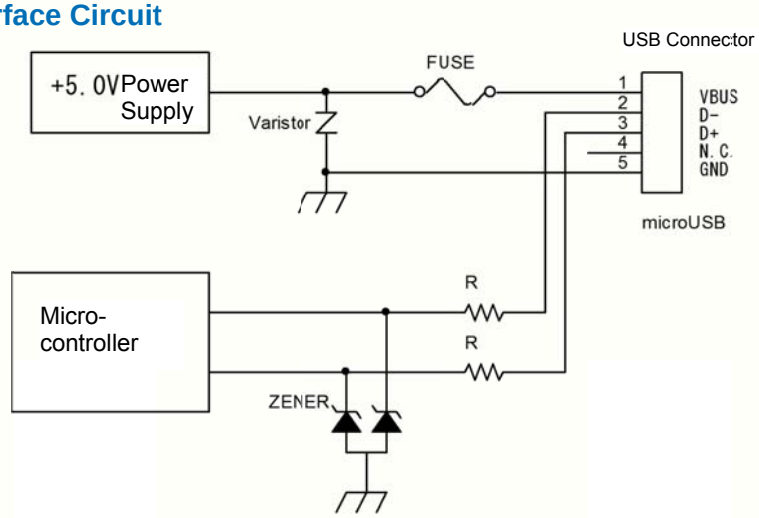

Figure 3: Interface Circuit (USB)

6.2 Bluetooth

The specifications of the OPH-5000i Bluetooth interface are as follows:

Specification	: Bluetooth Ver 2.1 compliant
Frequency	: 2402 MHz ~ 2480 MHz
Communication distance	: 10 m
Output level	: Class 2 (max 4 dBm)
Implemented profile	: SPP / HID
Communication configuration	: 1 to 1
Operating mode in communication	: Master / Slave mode
Security mode	: Authentication supported
Encryption	: Encryption supported

6.3 Wireless LAN

The specifications of the OPH-5000i Bluetooth interface are as follows:

Specification	: IEEE 802.11 b/g/n compliant
Frequency	: 2412 MHz ~ 2472MHz (1~13ch)
Access method	: Infrastructure mode, (STA)
Security	: WEP 64/128, WPA-TKIP, 128-bit WPA2 CCMP (AES)
Network stack	: IP, TCP, UDP, DHCP, ARP, SSL, DNS

6.3.1 IEEE 802.11b

Maximum output	: 0.0026W/MHz
Supported data rate	: 1, 2, 5.5, 11Mbps

6.3.2 IEEE 802.11g

Maximum output	: 0.0013W/MHz
Supported data rate	: 6, 9, 12,18, 24, 36, 48, 54Mbps

6.3.3 IEEE 802.11n

Maximum output	: 0.0007W/MHz
Supported data rate	: 6.5, 7.2, 13.0, 14.4, 19.5, 21.7, 26.0, 28.9, 39.0, 43.3, 52.0, 57.8, 58.5, 65.0, 72.2Mbps

6.4 Built-in NFC Tag

OPH-5000i has NFC tag built-in which record Bluetooth device address.

Frequency	: 13.56MHz
Standard	: ISO/IEC 14443 TYPE A, TYPE B and JISX6319-4

Recorded Contents:

Total 928 byte	
	NDEF
	Record #1 type: ”application/vnd.bluetooth.ep.oob” OOB data length: 8 Byte MAC address: 00:12:6A:xx:xx:xx
	Record #2 type: ”T” TEXT data length: 15 Byte TEXT data: ”00126Axxxxxx”
	Free area
Reserved area	

*xx differ depending on the product.

Rewriting from external: possible

7 Optical Specifications

7.1 Basic Specifications

Item		Characteristics
Scan method	CMOS area sensor (white / black)	-
Number of effective pixel	(Column) × (Row)	640 × 480 dots
Image capture speed (*1)	Frame rate	100 fps
Focal distance	Distance from the front edge of scanner	109.2mm
View angle	Horizontal	Approx. 38.0°
	Vertical	Approx. 28.9°
	Diagonal	Approx. 46.4°
Illumination light source (LED × 1)	Color	Warm white
	Color temperature	2600～3700K
	Maximum radiation output (*3)	114lm/W
Aiming light source (LED × 1)	Color	Green
	Peak wavelength	535 nm
	Maximum radiation output (*4)	87.4m/W

*1 The fastest seed of image capture
*2 Reference value extracted from the datasheet.
*3, *4 Reference value based on the datasheet (25°C, IF = 140 mA).

7.2 Aiming Pattern

The aiming is used for the following purpose:
1. Fill light to recognize the appropriate reading range.
2. Fill light when auto trigger is used.

The aiming specifications are as follows:
- The horizontal width of the imaging field of view and the horizontal aiming width are equal at a distance of L=85±20 mm from the front edge of the scanner.
- The horizontal imaging field of view at a distance of L=85 mm is 100%±10% of the horizontal aiming width.

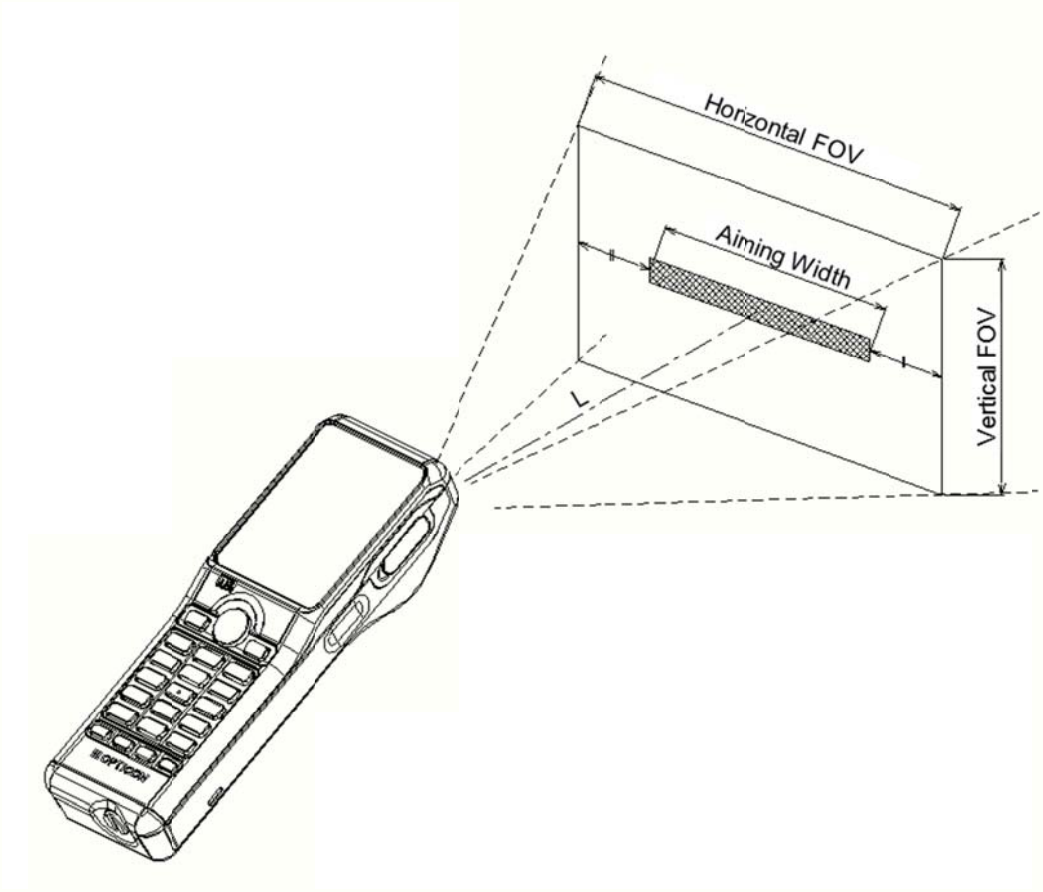

Figure 4: Aiming Pattern and Imaging Range

8 Technical Specifications

Aim the laser light at the center of a code to scan it. For long distance scanning, ambient light entering the angle of view may affect the scanning performance. The conditions for technical specifications are as follows, unless otherwise specified in each section.

<Conditions>

Ambient Temperature and Humidity	Room temperature, room humidity
Ambient Light	100 ~200 lux (on the surface of a barcode)
Angles	Pitch: α = 0°, Skew: β = 15°, Tilt: γ = 0°
Curvature	R = ∞
Power Supply Voltage	5.0 V
PCS (1D and 2D)	0.9 or higher
Scanning Test	Accept the performance with 90% or more success rate for 10 tries of scan. One reading should be 2 seconds.
Barcode Test Sample (1D and 2D)	Specified below.

< Test chart >
For 1D codes, OPTOELECTRONICS test samples
For GS1 Databar, stacked codes and 2D codes, printed by a dedicated printer for barcode

8.1 Barcode Test Sample

1D Barcodes

<Code 39>

Resolution	Symbology	PCS	Size (mm)	No. of Digits
0.1 mm (3.9 mil)	Code 39	0.9	26 × 10	16
0.127 mm (5 mil)			11 × 10	4
0.20 mm (7.9 mil)			100 × 10	31
0.254 mm (10 mil)			32.5 × 10	7
0.508 mm (20 mil)			43 × 25	4

<Code 128>

Resolution	Symbology	PCS	Size (mm)	No. of Digits
0.20 mm (7.9 mil)	Code 128	0.9	52 × 10	36

<UPC>

Resolution	Symbology	PCS	Size (mm)	No. of Digits
0.330 mm (13 mil)	12-digit UPC 12-digit EAN	0.9/0.2	31.5 × 24.5	12/13

GS1 Databar/Composite

<GS1-limited>

Resolution	Symbology	PCS	Size (mm)	No. of Digits
0.169 mm (6.7 mil)	Limited	0.9	12 × 1.5	14
0.169 mm (6.7 mil)	Limited-Composite	0.9	12 × 3.0	26

2D Codes

<PDF417>

Resolution	Error Correction	PCS	Size (mm)	No. of Character
0.169 mm (6.7 mil)	Level-3	0.9	23 × 10	58
0.254 mm (10 mil)			35 × 15	

<QR Code: Model-2>

Resolution	Error Correction	PCS	Size (mm)	No. of Character
0.212 mm (8.4 mil)	M	0.9	5 × 5	44
0.381 mm (15 mil)			11 × 11	

<Data Matrix>

Resolution	Model	PCS	Size (mm)	No. of Character
0.212 mm (8.4 mil)	ECC200	0.9	4 × 4	40
0.254 mm (10 mil)			6 × 6	

* The size is outline dimensions excluding the quiet zones.

8.2 Scan Area and Depth of Field

The scan area is the depth of field range, measured from the front edge of the scanner, swept over the entire scan arc.

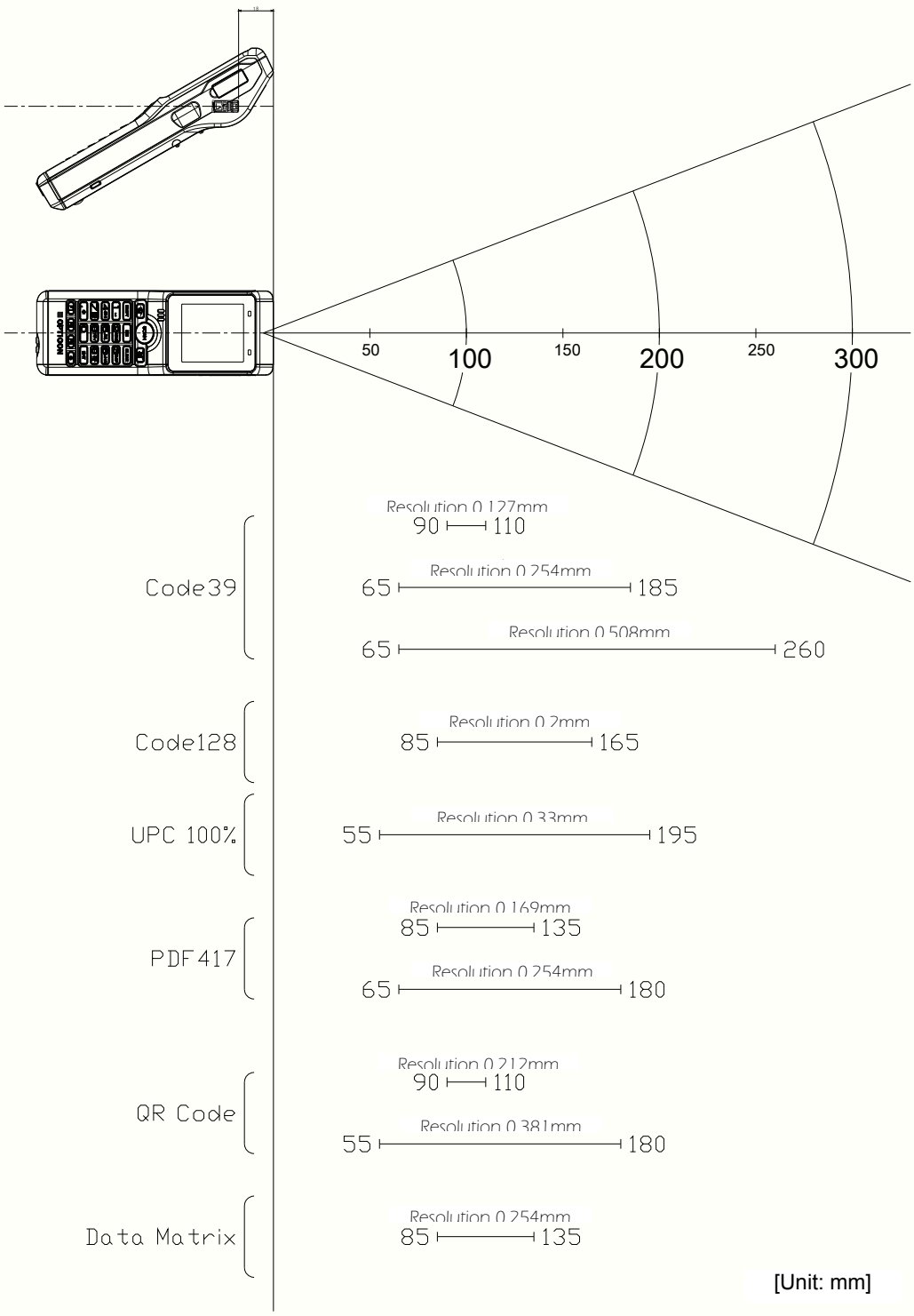

Figure 5: Scan Area and Depth of Field

8.3 Printed Contrast Signal (PCS)

0.2 or higher

<Conditions>

MRD	: 32% and higher (70% or higher reflectivity of space and quiet zone)
Distance	: 125mm from the front edge of the scanner
Barcode Sample	: UPC specified in Chapter 8. (Resolution: 0.33 mm, PCS: 0.3)

MRD = Minimum reflectance of white bar - Maximum reflectance of black bar

$$PCS = \frac{\text{Reflectance of white space} - \text{Reflectance of black bar}}{\text{Reflectance of white space}}$$

8.4 Minimum Resolution

1D Code	: 0.1 mm (3.9 mil)	Code 39 specified in Chapter 8.1
GS1-Databar	: 0.169 mm (6.7 mil)	GS1 Databar Limited specified in Chapter 8.1
Stacked Code	: 0.169 mm (6.7 mil)	PDF417, GS1 Databar Limited Composite specified in Chapter 8.1
2D Code	: 0.169 mm (6.7 mil)	QR Code, Data Matrix specified in Chapter 8.1

<Conditions>

Barcode Sample	: The above codes specified in Chapter 8.1
Distance	: 95 mm from the front edge of the scanner
Angle	: α = 0°, β =＋15°, γ = 0°
Curvature	: R = ∞

8.5 Barcode Width

Code 39 with width of 100 mm and resolution of 0.2 mm can be read

<Conditions>

Barcode Sample	: 0.20 mm Code 39 / PCS 0.9 specified in Chapter 8.1
Distance	: 155 mm from the front edge of the scanner
Angle	: α = 0°, β =＋15°, γ = 0°
Curvature	: R = ∞

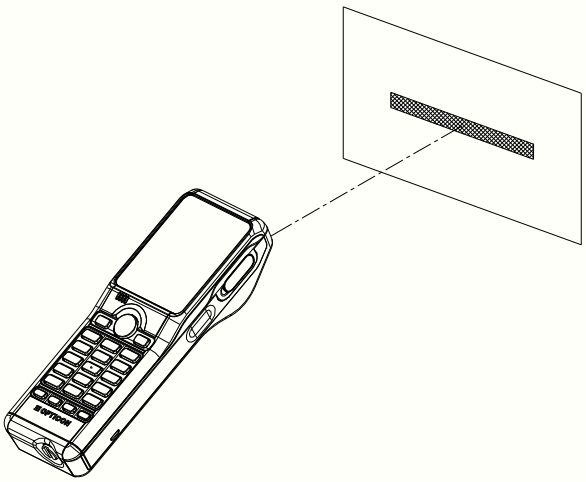

Figure 6: Wide Barcode

8.6 Pitch, Skew and Tilt

Pitch : α = ±50°
Skew : β = ±50°
Tilt : γ = ±180°

<Conditions>
Barcode Sample : 0.33 mm Code 39 specified in Chapter 7.1
Distance : 125 mm from the front edge of the scanner
Curvature : R = ∞
* For the pitch angle and tilt angle measurement, set the skew angle β = +15°

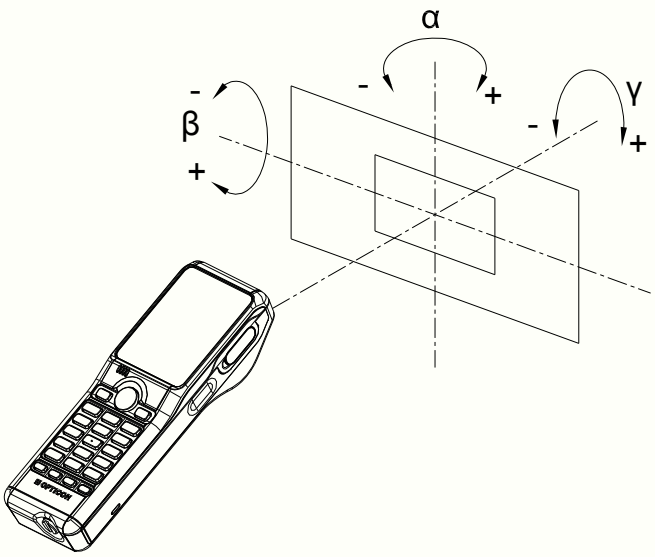

Figure 7: Pitch, Skew and Tilt

8.7 Curvature

0.33 mm 12-digit UPC : R ≧ 20 mm
0.15 mm 10-digit Codabar(NW-7) : R ≧ 16 mm

<Conditions>
Barcode Sample 0.33 mm UPC, 0.15 mm Codabar specified in Chapter 8.1
Distance 105 mm from the edge of the scan engine
Angle Skew angle β = +15°

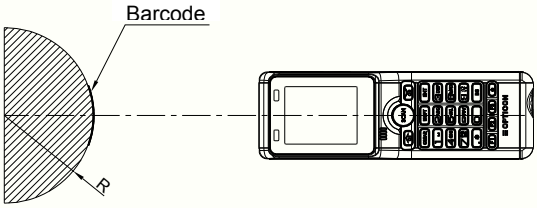

Figure 8: Curvature

Note: Scanning may fail due to the specular reflection of the LED illumination when the reflectivity of the barcode is high.

8.8 Motion Tolerance

UPC 100% can be read when it is moving at 2m/s.

<Conditions>

Ambient Temperature and Humidity	: Room temperature and Room humidity
Ambient Light	: 500 ~ 1000 lux
Distance	: 125 mm from the front edge of the scanner
PCS (1D and 2D)	: 0.9 or higher
Barcode Sample	: Refer to Chapter 8.1.

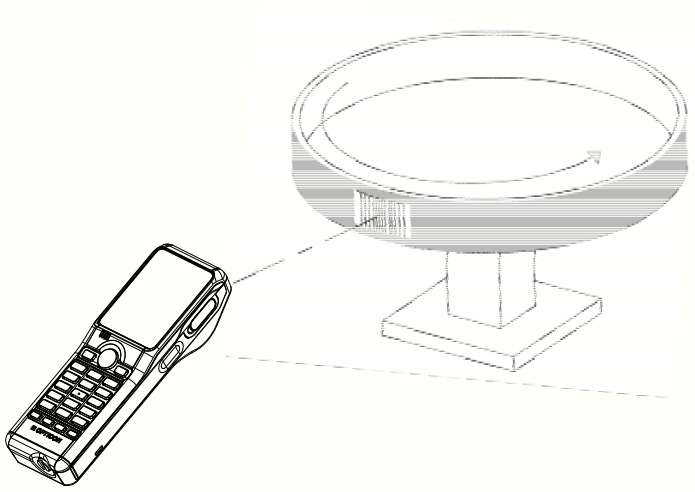

Figure 9: Motion Tolerance

* Scanning may fail due to the specular reflection of LED illumination when the reflectivity is high.

9 Environmental Specifications

9.1 Temperature

Scanning performance is guaranteed when the ambient temperature around the scanner is within the following ranges:

Operating Temperature	:	-10 ~ 50 °C
Storage Temperature	:	-20 ~ 60 °C

Please charge when the temperature is between 0 and 40°C. When the temperature is over 40°C, charging may stop to prevent battery breakdown.

<Conditions>

Barcode	: Resolution 0.33 mm, 9-digit Code 39 specified in Section 9.1.
Distance	: 125 mm from the front edge of the scanner
Angle	: α = 0°, β =＋15°, γ = 0°
Curvature	: R = ∞
Scanning Test	: Scan at interval 1000ms
Power consumption	: 3.7V

9.2 Humidity

Scanning performance is guaranteed when the ambient humidity around the scanner is within the following ranges:

Operating Humidity	:	20 ~ 85%RH (no condensation, no frost)
Storage Humidity	:	20 ~ 85%RH (no condensation, no frost)

<Conditions>

Barcode	: Resolution 0.33 mm, 9-digit Code 39 specified in Section 9.1.
Distance	: 125 mm from the front edge of the scanner
Angle	: α = 0°, β =＋15°, γ = 0°
Curvature	: R = ∞
Scanning Test	: Scan at interval 1000ms
Power consumption	: 3.7V

9.3 Ambient Light Immunity

Scanning performance is guaranteed when the range of illumination on a barcode surface is between zero and the following values:

Incandescent light:	10,000 lx
Fluorescent light:	10,000 lx
Sunlight:	100,000 lx

<Conditions>

Barcode:	Resolution 0.33 mm, 9-digit Code 39 specified in Section 9.1.
Distance:	125 mm from the front edge of the scanner
Angle:	α = 0°, β =＋15°, γ = 0°
Curvature:	R = ∞
Power consumption:	3.7V

Avoid direct or specula reflection from the light source as it may blind the scanners optical receiver.

9.4 Dust and Drip Proof

IEC IP54 equivalent

Protection against solid objects: Level 5 equivalent (Dust proof type)
Prevent dust ingress to inside. Even if slight dust intrusion will not inhibit normal operation.

Protection against liquids: Level 4 equivalent (Splash proof type)
Protected against water splash from any direction.

* () is JIS drip-proof type.

9.5 Vibration Tolerance (without packing)

There shall be no malfunction after the following vibration test.
Vibration test: Increase the frequency of the vibration from 10Hz to 100Hz at an acceleration velocity of 19.6m/s^2 (2.0 G) for 30 minutes (60 minutes per cycle) in the non-operating state. Repeat this of each X, Y and Z direction.

9.6 Vibration Tolerance (in individual packing)

There shall be no malfunction after the following vibration test.
Vibration test: Increase the frequency of the vibration from 10Hz to 100Hz at an accelerattion velocity of 19.6 m/s^2 (2.0 G) for 30 minutes (60 minutes per cycle) in individually packaged state. Repeat this of each X, Y and Z direction.

9.7 Drop Impact Tolerance (without packaging)

There shall be no malfunction after the following drop test.
Drop test: Drop the scanner 18 times in total (3 times at each 6 face), from a height of 150 cm onto a concrete floor as shown below.

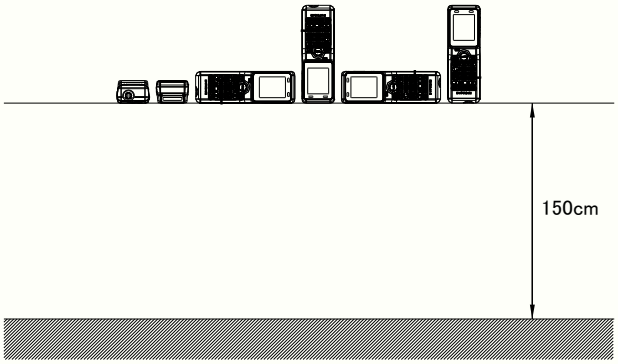

Figure 10: Drop Test

9.8 Drop Impact Tolerance (in individual packaging)

There shall be no sign of malfunction after the following drop test.
Drop test: Drop an individually packaged scanner 10 times in total, at any of 1 corner, 3 edges, and 6 faces, from a height of 150 cm onto a concrete floor.

9.9 Electrostatic Discharge Immunity

Air discharge	±8 kV max. (No malfunction) ±15 kV max. (No destruction)
Measurement environment	An electrostatic testing device compliant with IEC 61000-4-2 is used.
Discharge resistance	330 Ω
Charging capacitor	150 pF

10 Regulatory Compliance

10.1 LED Safety

IEC 62471:2006 Exempt_Group

10.2 Product Safety

EN60950-1:2005
IEC60950-1:2006

10.3 EMC

- EN 55024:2010
- EN 55032:2012+AC: 2013
- EN 301 489-1 V1.9.2
- EN 301 489-17 V2.2.1
- EN 300 328 V1.9.1
- EN 302 291-2 V1.1.1

CAUTION: Danger of explosion if battery is incorrectly replaced. Replace only with the same or equivalent type recommended by the manufacturer. Dispose of used batteries according to the manufacturer's instructions

FCC Part 15 Subpart C, Subpart B Class A

Federal Communications Commission Notices

This equipment has been tested and found to comply with the limits for a Class A digital device, pursuant to Part 15 of the FCC Rules. These limits are designed to provide reasonable protection against harmful interference when the equipment is operated in a commercial environment. This equipment generates, uses, and can radiate radio frequency energy and, if not installed and used in accordance with the instruction manual, may cause harmful interference to radio communications. Operation of this equipment in a residential area is likely to cause harmful interference in which case users will be required to correct the interference at their own expense.

Harmful Interference Notice
Changes or modifications not expressly approved by the party responsible for compliance could void the user's authority to operate the equipment.

This device complies with FCC SAR exposure limits set forth for an uncontrolled environment. SAR compliance for using the equipment in close proximity to the human body has been evaluated at 0mm.

This equipment must not be co-located or operating in conjunction with any other antenna or transmitter. End-users and installers must be provide with antenna installation instructions and consider removing the no-collocation statement.

This device complies with Part 15 of the FCC Rules.
Operation is subject to the following two conditions:
(1) this device may not cause harmful interference, and
(2) this device must accept any interference received, including interference that may cause undesired operation.

Caution!
Any changes or modifications not expressly approved by the party responsible for compliance could void the user's authority to operate the equipment.

VCCI Class A

This is a Class A product based on the standard of the Voluntary Control Council for Interference (VCCI). If this equipment is used in a domestic environment, radio interference may occur, in which case the user may be required to take corrective actions.

10.4 Other

・Bluetooth logo certification
・MFi license
・Certification for Construction Design of Specified Radio Equipment

・Classification of Specified Radio Equipment	Article 2 Paragraph 1, Item 19 Low power data communication system in 2.4 GHz band
・Model Name	OPA-26X1
・Certificate Number	201-125603

・Classification of Specified Radio Equipment	Article 2 Paragraph 1, Item 19 Low power data communication system in 2.4 GHz band
・Wireless LAN Model Name	ATWINC1500-MR210PB
・Certificate Number	007-AD0199

11 RoHS

RoHS compliance.

RoHS: The restriction of the use of certain hazardous substances in electrical and electronic equipment, 2011/65/EU

12 Reliability

MTBF (Mean Time Between Failures) 50,000 hours

13 Precautions

Handle this product carefully. Do not deliberately subject it to any of the following.

(1) Shock:
・ Do not drop this product from a height greater than specified in this manual.
・ Do not place this product under or between any heavy items.
・ Do not swing the cable around.

(2) Temperature Conditions:
・ Do not use this product at temperatures outside the specified range.
・ Do not pour boiling water on this product.
・ Do not throw this product into a fire.

(3) Foreign Materials:
・ Do not immerse this product in water or other liquid.
・ Do not expose this product to chemicals.

(4) Others
・ Do not disassemble this product.
・ Do not use this product near a radio or a TV. It may cause reception problems.
・ This product may be affected by a momentary voltage drop caused by lightning.
・ Do not place pieces of metal such as coins, nor attach metallic foil to the area where the charging coil is located.
Also, do not affix anything which prevent from placing OPH-5000i to cradle.
・ Although surface of LCD is tempered glass, but do not drop or hit any hard object on purpose.

13.1 Radio Law

This product qualifies as specified radio equipment for radio stations of 2.4 GHz band data communication system and has obtained the Certification for Construction Design of Specified Radio Equipment. Therefore, radio station license is not required in Japan.

The following activities are prohibited under the Radio Law:
・Remodelling and disassembly
・Peeling off the certificate label

Do not use this equipment under the following environment, as radio interference may affect other device and end up with causing physical or material damage.
・Safety apparatus and medical device for human body protection
・Environment where is concerned to cause serious damage

13.2 Bluetooth

・This product supports Bluetooth wireless communication with other Bluetooth devices that have the same profile
・This product complies with Bluetooth standards; however, its communication performance with untested devices is not guaranteed.
・Bluetooth devices use the 2.4 GHz frequency band that is shared among other devices. It may affect the communication speed and distance between this product and the host device.
・The communication speed and distance vary depending on the interference and radio wave condition between this product and the host device.

13.3 Frequency Band

This product uses the 2.4 GHz frequency band. Read carefully the followings before using this product.

In the frequency band of this product, scientific, medical and industrial devices including microwaves are used. Also other radio stations including local private radio station for mobile object identification requiring license for such as manufacturing lines at factories, specific power-saving radio station requiring no license and amateur radio station are managed.

1. Make sure that “other radio stations” are not managed in the frequency band 2.4 GHz before using this product.
2. In case that radio interference occurs between this product and “other radio stations,” change the service space immediately, or stop transmitting radio wave to avoid the interference.
3. If you have any questions or troubles, please contact our sales office.

13.4 Usage Note

・Do not attach metal foil or piece of metal to charging coil storage part. Also, do not insert metal like coins between scanner and dedicated cradle when charging.
・Be careful of dust or foreign objects inserting when opening battery cover. Precisions dust and drip proof may not be satisfied.

* This specification manual is subject to change without prior notice.

14 Product Labels

The product labels are affixed to the scanner as shown below.

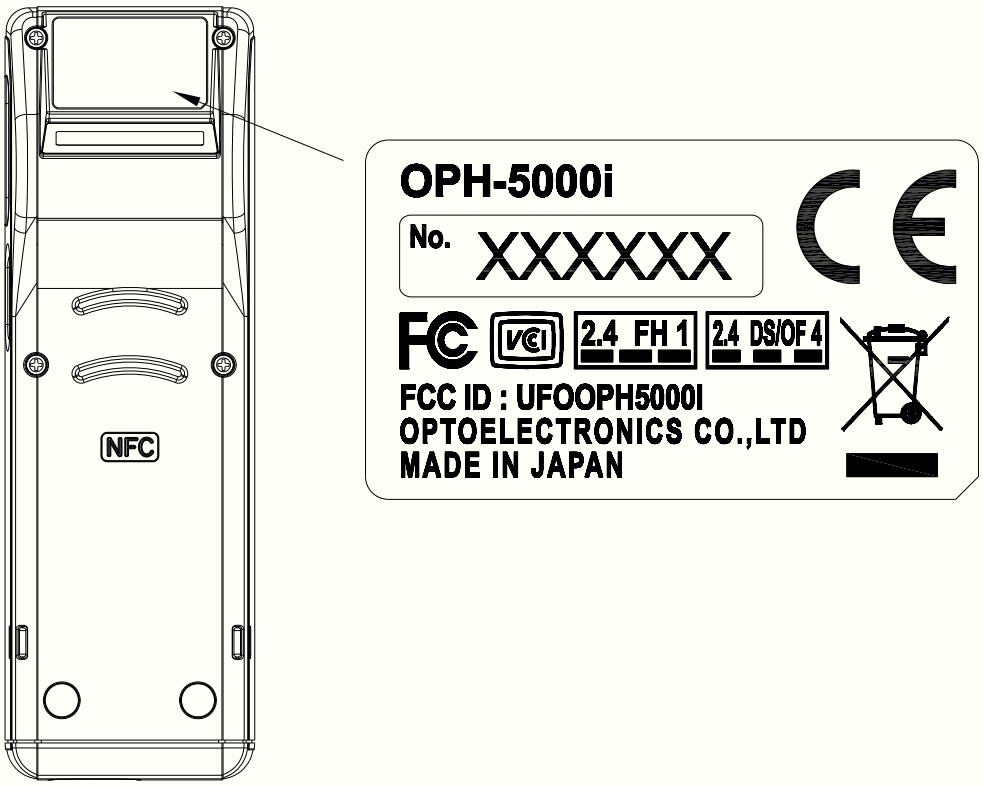

Figure 11: Product Label Position

15 Packaging Specifications

15.1 Individual Packaging

Assembled package size: 125 × 112 × 40 (WDH mm)
Weight: Approx. xx kg

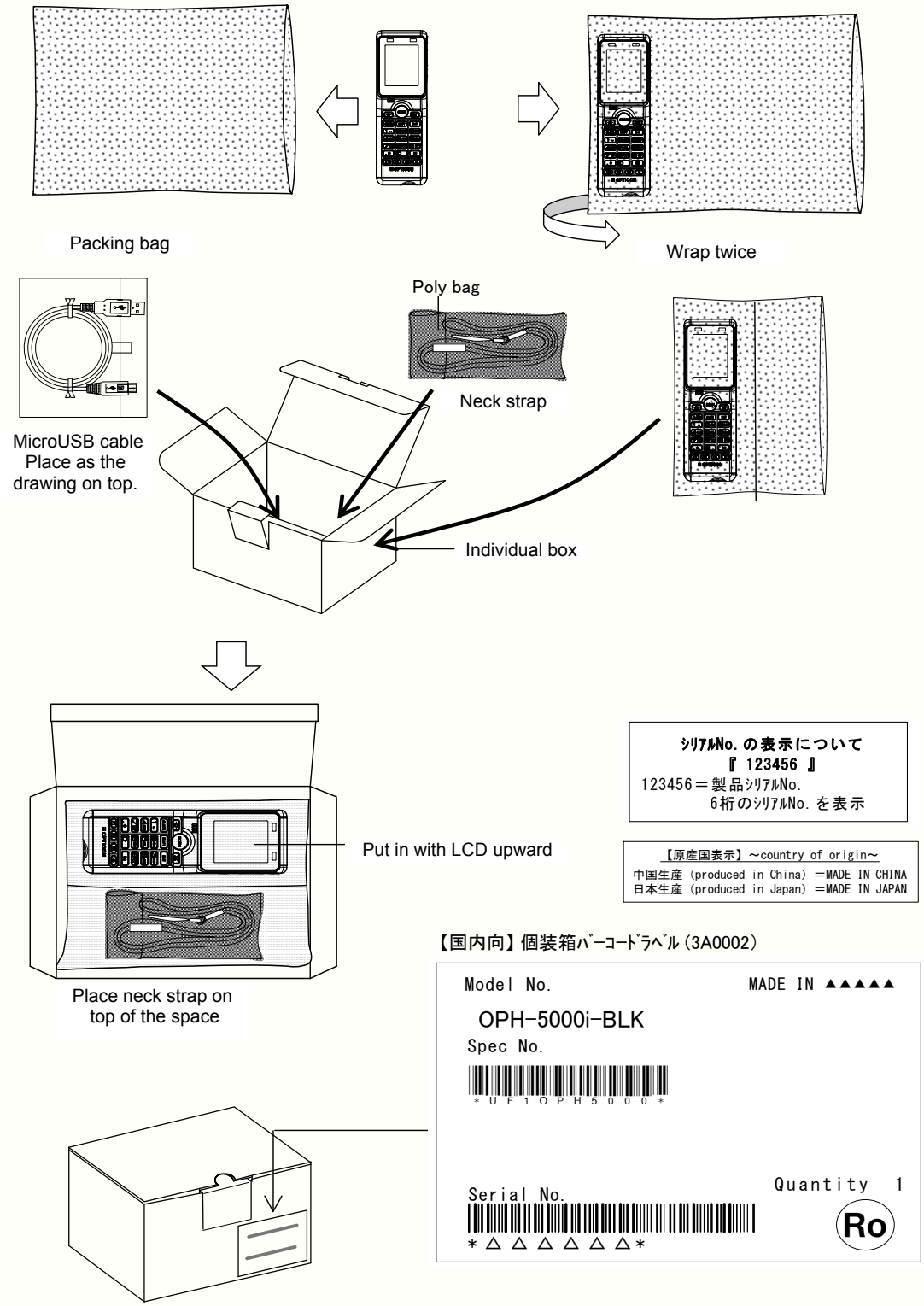

Figure 12: Individual Packaging

15.2 Collective Packaging

100pcs per box
Assembled package size : 595 × 520 × 245 (WDH mm)
Weight: Approx. xx kg

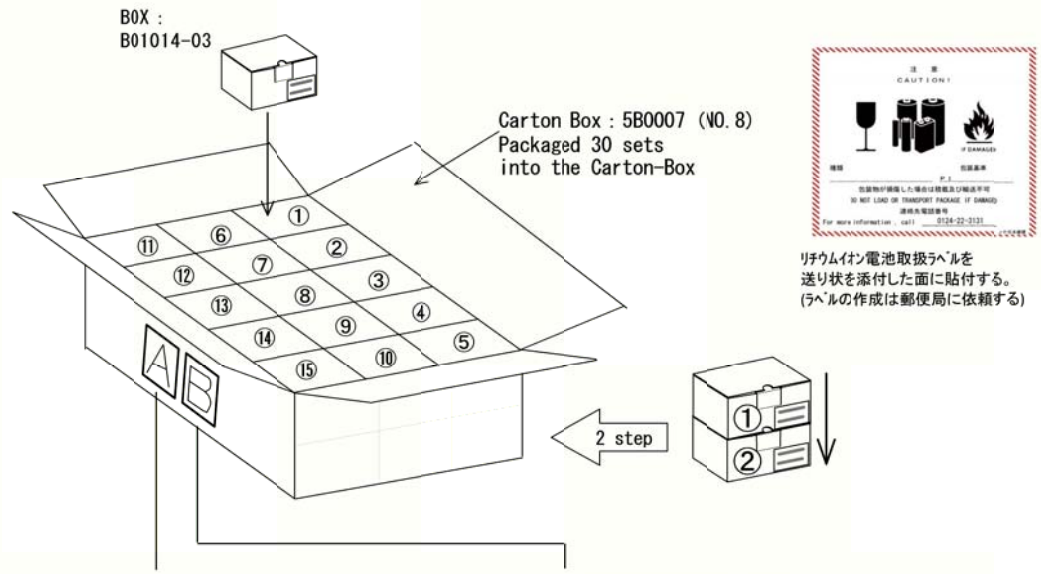

A : Barcode Serial Label for Packaging Box:
Stick the labels on both front and back side of the box.

B : Missing Serial Number Label:
Attach this label when there are more than 3 labels of which serial numbers are out of order (not in a correct sequence).

(3C0006)

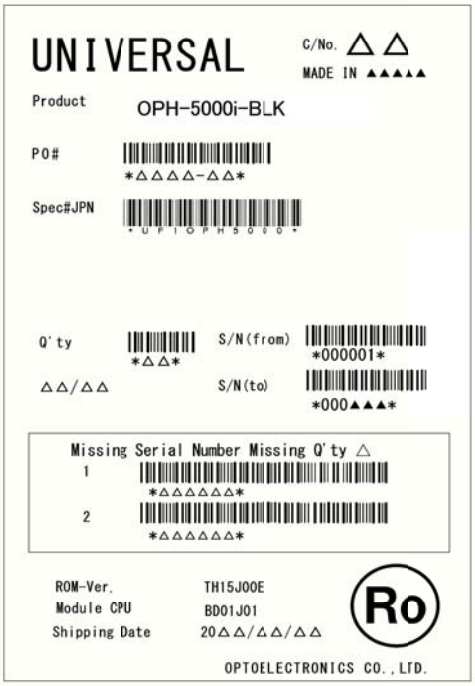

(3C0007)

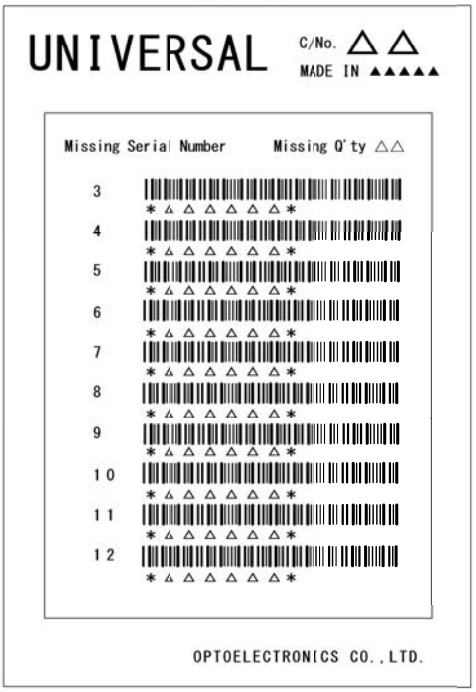

【原産国表示】～country of origin～
中国生産 (produced in China) =MADE IN CHINA 日本生産 (produced in Japan) =MADE IN JAPAN

Note: 'Ro mark' on the trays and boxes indicates that the product is RoHS compliant as is declared by Optoelectronics Co., Ltd.

Figure 13: Collective Packaging

16 Physical Features

16.1 Dimensions

136 × 44 × 30.3(22) (DWH mm) () is grip dimensions

16.2 Weight

Approx. 120 g (excluding accessories)

16.3 Mechanical Drawing

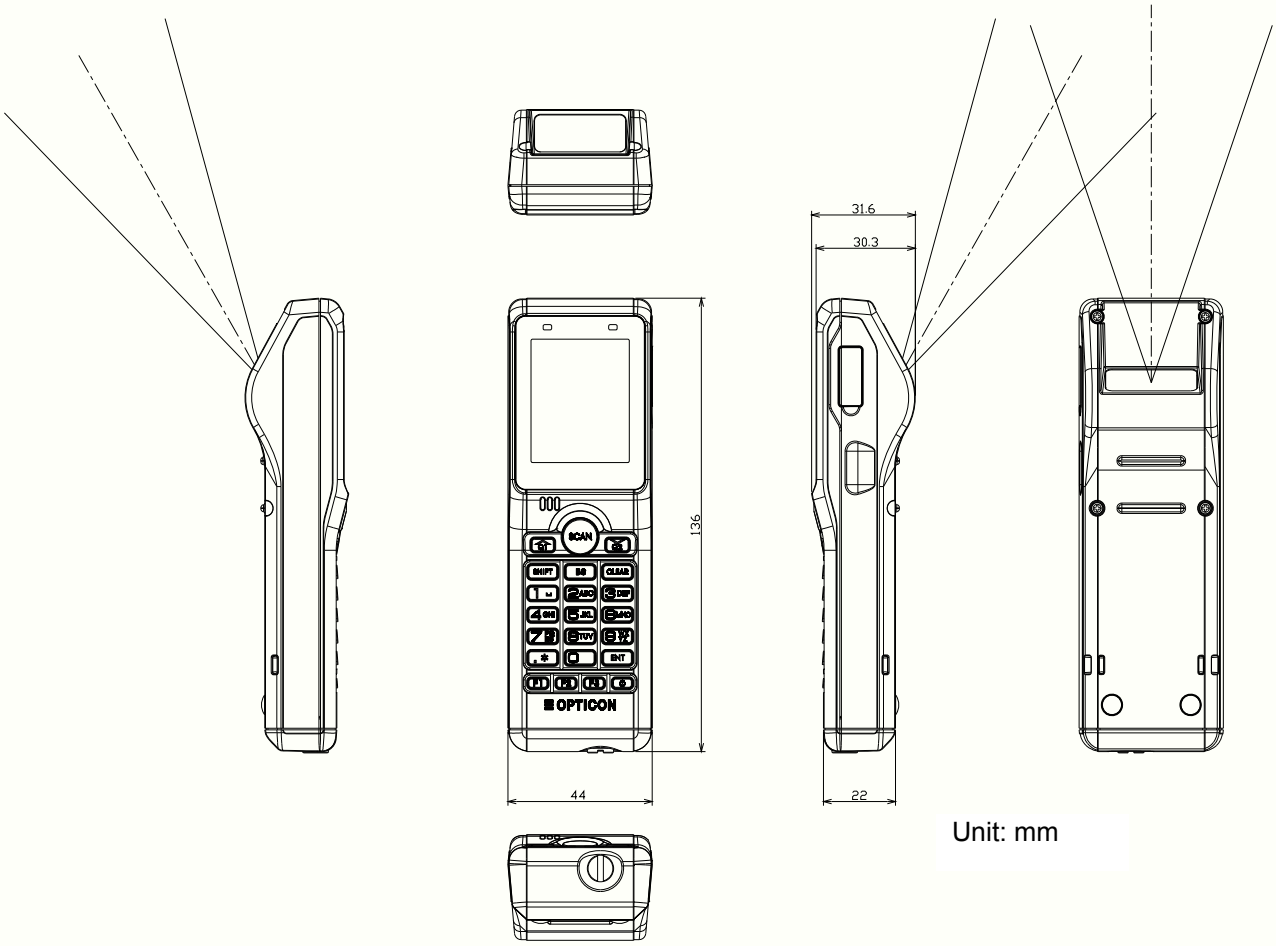

Figure 14: Mechanical Drawing

17 Supported Symbologies

17.1 Default Setting

The scanner is set to default by reading the following menu label.

Default
@MENU_OPTO@ZZ@SO@ZZ@OTPO_UNEM@

17.2 Supported Symbologies

17.2.1 1D Barcodes

Code type	Default	Minimum length	Remarks
UPC	○	-	
UPC Add-on 2 UPC Add-on 5			
EAN(JAN)	○	-	
EAN Add-on 2 EAN Add-on 5			
EAN-13	○		
EAN-13 Add-on 2 EAN-13 Add-on 5			
EAN-8	○		
EAN-8 Add-on 2 EAN-8 Add-on 5			
Code 39	○	1	Not transmit ST/SP
Tri-Optic	○	-	Not transmit ST/SP
Codabar (NW7)	○	1	Not transmit ST/SP
Industrial 2of 5	○	5	
Interleaved 2of 5	○	6	
S-Code		5	
Code 128	○	1	GS1 conversion (setting required)
Code 93	○	1	
IATA	○	5	
MSI/Plessey		3	
UK/Plessey		2	
Telepen		1	
Code 11		1	
Matrix 2 of 5		5	
Chinese Post Matrix 2 of 5		-	
Korean Postal Authority		-	
Intelligent Mail Barcode		-	
POSTNET		-	
JPN (Customer Barcode)		-	

17.2.2 GS1 Databar, Composite Code

Code type	Default	Remarks
GS1 DataBar ・GS1 DataBar Omnidirectional ・GS1 DataBar Truncated ・GS1 DataBar Stacked ・GS1 DataBar Stacked Omnidirectional	○	GS1 conversion (setting required)
GS1 DataBar Limited	○	
GS1 DataBar Expanded ・GS1 DataBar Expanded ・GS1 DataBar Expanded Stacked	○	
Composite GS1-DataBar ・CC-A ・CC-B ・Limited CC-A ・Limited CC-B ・Expanded CC-A ・Expanded CC-B		GS1 conversion (setting required)
Composite GS1-128 ・CC-A ・CC-B ・CC-C		GS1 conversion (setting required)
Composite EAN ・EAN-13 CC-A ・EAN-13 CC-B ・EAN-8 CC-A ・EAN-8 CC-B		GS1 conversion (setting required)
Composite UPC ・UPC-A CC-A ・UPC-A CC-B ・UPC-E CC-A ・UPC-E CC-B		GS1 conversion (setting required)

17.2.3 2D Codes

Code type	Default	Remarks
PDF417	○	
Micro PDF417		
Codablock F		
QR Code	○	GS1 conversion (setting required)
Micro QR	○	
Data Matrix (ECC 200)	○	GS1 conversion (setting required)
Data Matrix (ECC 000-140)		
Aztec Code	○	
Aztec Runes		
Chinese-sensible code		
Maxi Code		

* The supported symbologies vary depending on specifications for the application to be loaded.