SPECIFICATIONS MANUAL

OPN-2102i

Data Collector with Bluetooth

This manual provides specifications for the OPN-2102i Bluetooth data collector with laser barcode scanner.

1st

OPTICON

The information in this document is subject to change without notice.

Document History

Model Number:	OPN-2102i	Specification Number:	SS16056
Edition:	1st	Original Spec Number:	(SS16017)
Date:	30-September-2016		

© 2016 Opticon. All rights reserved.

This manual may not, in whole or in part, be copied, photocopied, reproduced, translated or converted to any electronic or machine readable form without prior written consent of Opticon.

Limited Warranty and Disclaimers

Please read this manual carefully before installing or using the product.

Serial Number

A serial number appears on all Opticon products. This official registration number is directly related to the device purchased. Do not remove the serial number from your Opticon device. Removing the serial number voids the warranty.

Warranty

Unless otherwise agreed in a written contract, all Opticon products are warranted against defects in materials and workmanship for two years after purchase excluding batteries. Opticon will repair or, at its option, replace products that are defective in materials or workmanship with proper use during the warranty period. Opticon is not liable for damages caused by modifications made by a customer. In such cases, standard repair charges will apply. If a product is returned under warranty and no defect is found, standard repair charges will apply. Opticon assumes no liability for any direct, indirect, consequential or incidental damages arising out of use or inability to use both the hardware and software, even if Opticon has been informed about the possibility of such damages.

Packaging

The packing materials are recyclable. We recommend that you save all packing material to use should you need to transport your data collector or send it for service. Damage caused by improper packaging during shipment is not covered by the warranty.

Trademarks

Trademarks used are the property of their respective owners.

Opticon Inc. and Opticon Sensors Europe B.V. are wholly owned subsidiaries of OPTOELECTRONICS Co., Ltd., 12-17, Tsukagoshi 4-chome, Warabi-shi, Saitama, Japan 335-0002. TEL +81-(0) 48-446-1183; FAX +81-(0) 48-446-1184

SUPPORT

USA

Phone: 800-636-0090
Email: support@opticonusa.com
Web: www.opticonusa.com

Europe

Phone: +31235692728
Email: support@opticon.com
Web: www.opticon.com

Revision History

Product Name : OPN-2102i

Edition	Date	Page	Section	Description of Changes
1st	2016/09 /30	-	-	

Contents

1 Abstract 6
2 Overview 6
3 Basic Specifications 7
4 Detailed View 9
5 Electrical Specifications 10
5.1 USB 10
5.2 Wireless Charging 10
6 Interface Specifications 10
6.1 USB Interface 10
6.1.1 Connector 10
6.1.2 USB Interface Circuit 10
6.2 Bluetooth 11
6.3 NFC Tag 11
7 Optical Specifications 11
7.1 Basic Specifications 11
7.2 Laser Scanning Standards 12
7.2.1 Laser Scanning Tilt 12
7.2.2 Laser Scanning Curvature 12
8 Technical Specifications 13
8.1 Barcode Test Sample 13
8.2 Scan Area and Depth of Field 14
8.3 Printed Contrast Signal (PCS) 15
8.4 Minimum Resolution 15
8.5 Pitch, Skew and Tilt 15
8.6 Curvature 16
9 Environmental Specifications 16
9.1 Temperature 16
9.2 Humidity 16
9.3 Ambient Light Immunity 17
9.4 Dust and Drip Proof 17
9.5 Vibration Strength (without packing) 17
9.6 Vibration Strength (in individual packing) 17
9.7 Drop Impact Strength (without packaging) 18
9.8 Drop Impact Strength (in individual packaging) 18
9.9 Electrostatic Discharge Immunity 18
10 Regulatory Compliance 19
10.1 LED Safety 19
10.2 Product Safety 19
10.3 EMC 19
10.4 Other 20

11 RoHS 20
12 Reliability 20
13 Precautions 20
13.1 Precaution against Laser Light 20
13.2 Handling 21
13.3 Radio Law 21
13.4 Bluetooth 22
13.5 Frequency Band 22
14 Product Labels 23
15 Packaging Specifications 24
15.1 Individual Packaging 24
15.2 Collective Packaging 25
16 Physical Features 26
16.1 Dimensions 26
16.2 Weight 26
16.3 Mechanical Drawing 26
17 Supported Symbologies 27
17.1 Default Setting 27
17.2 Supported Symbologies 27
17.2.1 1D Barcodes 27
17.2.2 GS1 Databar, Composite Code 28

Table of Figures

Figure 1: Detailed View 9
Figure 2: micro USB B Connector 10
Figure 3: Interface Circuit (USB) 10
Figure 4: Laser Scanning Specification 12
Figure 5: Scan Area and Depth of Field 14
Figure 6: Pitch, Skew and Tilt 15
Figure 7: Curvature 16
Figure 8: Drop Test 18
Figure 9: Product Label Position 23
Figure 10: Individual Packaging 24
Figure 11: Collective Packaging 25
Figure 12: Mechanical Drawing 26

1 Abstract

This manual provides specifications for the OPN-2102i compact laser data collector with built-in Bluetooth.

2 Overview

The OPN-2102i is compact battery powered portable laser scanner with a build-in wireless battery charger. Below are some of the key features:

- The OPN-2102i is a handy and simple to use data collector.
- The scanned barcode data can be transmitted to a host device through the USB interface or via the build-in Bluetooth interface.
- The scanner can work with many Bluetooth enabled host devices, such as PCs, tablets and smart phones.
- Bluetooth SPP (Serial Port Profile) and HID (Human Interface Device Profile) are implemented.
- Built-in NFC tag allows for “tap to connect” on supported telephones which greatly simplifies the pairing process of Bluetooth.
- A red LED aiming line toward a target bar code can help the users find the appropriate scanning position.
- Alcohol can be used to wipe the scanner clean
- The power source is a 3.7 V 600 mAh (typ.) Li-ion polymer battery.
- The OPN-2102i supports wireless charging and a dedicated charging cradle, the CRD-3000 is available for that. The OPN-2102i can also be charged via its USB interface.
- The scanner is Apple MFi certified.

3 Basic Specifications

Item			Specification		Note
Control Section	CPU		32 bit CISC / 96 MHz		
	FROM		512 Kbyte + 32 Kbyte		
	SRAM		96 Kbyte		
	FROM (storage)		1 Mbyte		For data area only
Input Section	Key type		2 key: trigger, function		
Indicator	LED		2 bi-colors LEDs (red, green) and 1 blueLED		
	Buzzer		Loudness (3-level) / tone adjustable		
	Vibration motor		Strength (3-level) / duration adjustable		
RTC	Contents		Year, month, date, hour, minute, second		Data and time are lost when the main battery is removed.
	Accuracy		± 90 seconds per month		
Interface	Bluetooth		Frequency	2402 ~ 2480 MHz	
			Specification	Bluetooth Ver 2.1 compliant	
			Communication distance	10 m	Not guaranteed.
			Output level	Class 2	Max output 4 dBm
			Profile	SPP / HID	
	NFC tag		ISO/IEC 14443 TYPE A, TYPE B JISX6319-4		
	USB		・Full-Speed 12Mbps (HID/COM) ・Hi-Power Bus-powered supported		
Optical Section	Light-emitted element		Red laser diode		
	Laser wavelength / output		650±10nm 1mW or less		Wavelength in temperature 25℃
	Scan rate		100±20scan/sec		
Supported 1D Symbologies	Symbologies		JAN,EAN,UPC-A,UPC-E,NW-7 (Codabar), Industrial 2 of 5,Interleaved 2 of 5, Code 11, Code 39, Code 93, Code 128		Refer to Section 17. for details
	Minimum resolution		Code 39 : 0.076mm		PCS 0.9
	Curvature		R ≥ 15 mm (8-digit JAN) R ≥ 20 mm (13-digit JAN)		PCS 0.9
	Barcode width		100 mm wide 0.2 mm resolution Code 39 (DOF 150 mm) is readable:		
	Scan angle		Pitch : α ≦±35°		PCS 0.9
			Skew : β ≦±50° (Excluding dead zone)		
			Tilt : γ ≦±20°		
	Depth of Field	Code 39	Resolution (1.0)	50 ~ 420	
			Resolution (0.5)	45 ~ 340	
			Resolution (0.25)	40 ~ 250	
			Resolution (0.15)	40 ~ 155	
			Resolution (0.127)	45 ~ 130	

Item			Specification	Note
	Minimum PCS		0.3 or more	MRD 32% or more
Power Section	Main battery		Lithium-polymer 600 mAh (typ.)	
	Up-time		25 hours or more	*1
	Feeding system		Electromagnetic guidance wireless charging, microUSB	
	Operating (charging) voltage		4.5 ~ 5.5V	Charging with USB
	Current consumption	Charging	Less than 500 mA	
Environmental Specifications	Temperature	Operating	-10 ~ 50°C	
		Storage	-20 ~ 60°C	
	Humidity	Operating	20 ~ 85%	No condensing No frost
		Storage	20 ~ 85%	
	Ambient light immunity	Fluorescent	4,000 lx or less	
		Sunlight	80,000 lx or less	
	Vibration		10 Hz ~ 100 Hz, acceleration of 19.6 m/s^2, 60 minutes per cycle, repeat once in each X, Y and Z-direction	
	Drop		Drop the scanner 18 times (6 faces x 3) from a height of 150 cm onto a concrete floor	
	Dust and drip proof		IP54 equivalent	
Regulatory Compliance	LED safety		JIS C 6802:2011 Class2 IEC 60825-1 Ed.2: 2007 Class 2 CDRH Class Ⅱ	
	Product safety		EN60950-1:2005 IEC60950-1:2006	
	EMC		EN 55024:2010 EN 55032:2012+AC: 2013 EN 301 489-1 V1.9.2 EN 301 489-17 V2.2.1 EN 300 328 V1.9.1 EN 302 291-2 V1.1.1 FCC Part 15 Subpart C, Subpart B ClassB VCCI Class B	For residential, commercial and light-industrial environments
	European conformity		CE Marking	
			Certification for Construction Design of Specified Radio Equipment	
	Other		Bluetooth logo certification MFi license	
Immunity Test	ESD	No distraction	Air discharge (direct): ±15 kV	Conditions: IEC61000-4-2 compliant
		No malfunction	Air discharge (direct): ±8 kV	
Physical Features	Dimensions		83.0 × 36 × 21.5 (WDH mm)	
	Weight		Approx. 60 g	Excluding accessories

*1: When a barcode is read twice every 10 seconds at room temperature in a constant Bluetooth connection (SPP master mode).

4 Detailed View

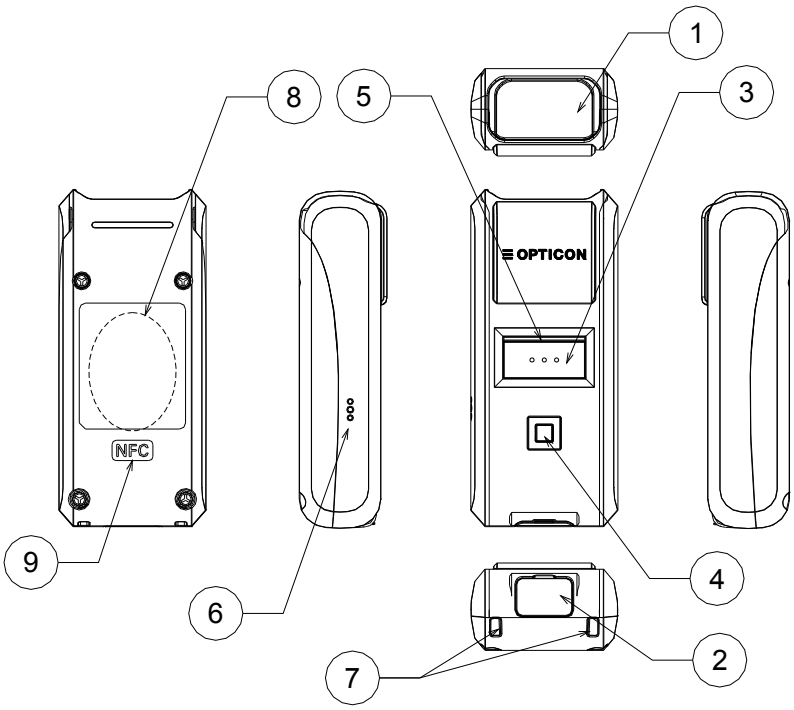

Figure 1: Detailed View

No	Name	Description
1	Scan Window	The laser light is emitted through this window. Ensure that the lens is not exposed to dust and dirt before scanning.
2	USB Cap	Cap for USB connector part used to make the scanner IP54 water tight.
3	Trigger Key	Press this key to enable the laser and start reading barcodes.
4	Function Key	The function of this key depends on the installed application.
5	LED	Indicates operating status, such as bar code reading, Bluetooth connection, warning etc.
6	Buzzer Orifice	Holes for buzzer.
7	Strap Orifice	Holes for attaching a hand strap.
8	Charging Coil	The charging coil is located here with which the dedicated cradle can supply power to the scanner.
9	NFC	This is the location of the NFC tag. Hold an NFC reader close to this area when the tag has to be read.

5 Electrical Specifications

5.1 USB

Supply Voltage : 4.5-5.5V
Bus-power (Class) : 500mA max (hi-power)
Current consumption : Less than 500mA

5.2 Wireless Charging

Feeding system : Electromagnetic induction
Power consumption : Less than 5W

6 Interface Specifications

The OPN-2102i supports two types of interfaces; USB and Bluetooth.

6.1 USB Interface

Interface is Full Speed USB interface.

6.1.1 Connector

Signal Name	Contact Number
VCC	1
DATA(-)	2
DATA(+)	3
(NC)	4
GND	5

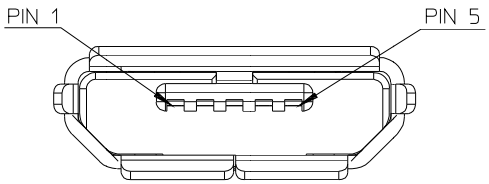

Figure 2: micro USB B Connector

6.1.2 USB Interface Circuit

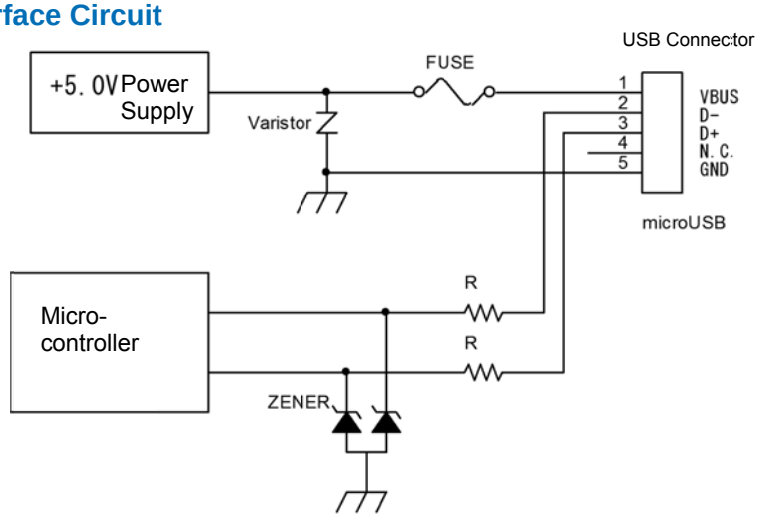

Figure 3: Interface Circuit (USB)

6.2 Bluetooth

The specifications of the OPN-2102i Bluetooth interface are as follows:

Frequency	: 2402 ~ 2480 MHz
Specification	: Bluetooth Ver 2.1 compliant
Communication distance	: 10 m
Output level	: Class 2 (max 4 dBm)
Implemented profile	: SPP / HID
Communication configuration	: 1 to 1
Operating mode in communication	: Master / Slave mode
Security mode	: Authentication supported
Encryption	: Encryption supported

6.3 NFC Tag

OPN2102i has NFC tag built-in which record Bluetooth device address.

Frequency: 13.56MHz

Standard : ISO/IEC 14443 TYPE A, TYPE B and JISX6319-4

Recorded Contents:

Total 928 byte	
	NDEF
	Record #1 type: ”application/vnd.bluetooth.ep.oob” OOB data length: 8 Byte MAC address: 00:12:6A:xx:xx:xx
	Record #2 type: ”T” TEXT data length: 15 Byte TEXT data: ”00126Axxxxxx”
	Free area
Reserved area	

*xx will differ according to product.

Rewriting from external: possible

7 Optical Specifications

7.1 Basic Specifications

Item		Characteristics	Unit
Light-Emitting Element		Red laser diode	-
Emission Wavelength		650 ±10 (25° C)	nm
Light Output		< 1.0	μW
Scanning Method		Bi-directional scanning	-
Scanning Speed		100 ±20	scans/sec
Scan Angle	Scan Angle	54 ±5	deg
	Effective Scan Angle	44 (Min)	deg

7.2 Laser Scanning Standards

7.2.1 Laser Scanning Tilt

Vertical differences between both ends of a laser scanning line:
- Up to 1.2 degrees in a vertical direction from the scan origin (scanning mirror).
- Up to 3.1 mm measured at 150 mm from the scan origin and with zero skew angle.
- Measure in the middle of the scanning line.

7.2.2 Laser Scanning Curvature

The maximum differences between the laser scanning line and a straight line connecting the both ends of the scanning line:
- Up to 1.27 degrees from the scan origin (scanning mirror).
- Up to 3.3 mm measured at 150 mm from the scan origin.
- Measure in the middle of the scanning line.

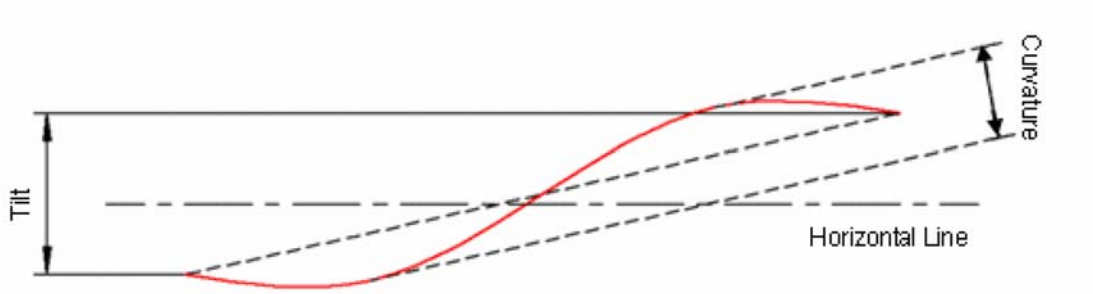

Figure 4: Laser Scanning Specification

8 Technical Specifications

Ambient conditions are as follows unless otherwise specified in each section:

<Conditions>

Ambient Temperature and Humidity	Room temperature, room humidity
Ambient Light	500 ~ 900 lx
Barcodes	Refer to Section 8.1.
Background	Black
Power supply voltage	5V (USB)
Reading Test	Accept the performance with 10 consecutive successes in reading. Each reading should be done in 0.5 seconds or less.

8.1 Barcode Test Sample

<Code 39>

Resolution	Symbology	PCS	Quiet Zone	No. of Digits
1.0 mm	Code 39	0.9	25 mm	1
0.5 mm			18 mm	3
0.25 mm			10 mm	8
0.25 mm			10 mm	9
0.15 mm			7 mm	10
0.127 mm			5 mm	4
0.076mm			5 mm	5

<JAN>

Resolution	Symbology	PCS	Quiet Zone	No. of Digits
0.26 mm	JAN	0.9	10 mm	13
0.26 mm			10 mm	8

8.2 Scan Area and Depth of Field

The scanner is able to read in the area between the two arcs that are centered on the scan origin with a center line distance from the front of the scanner as indicated for each resolution.

Resolution	No. of Digits	Depth of Field (mm)
1.0mm	1	50 ~ 420
0.5mm	3	45 ~ 340
0.25mm	8	40 ~ 250
0.15mm	10	40 ~ 155
0.127mm	4	45 ~ 130

<Conditions>
Barcode : Code 39 specified in Section 8.1.
Angle : α = 0°, β = + 15°, γ = 0°

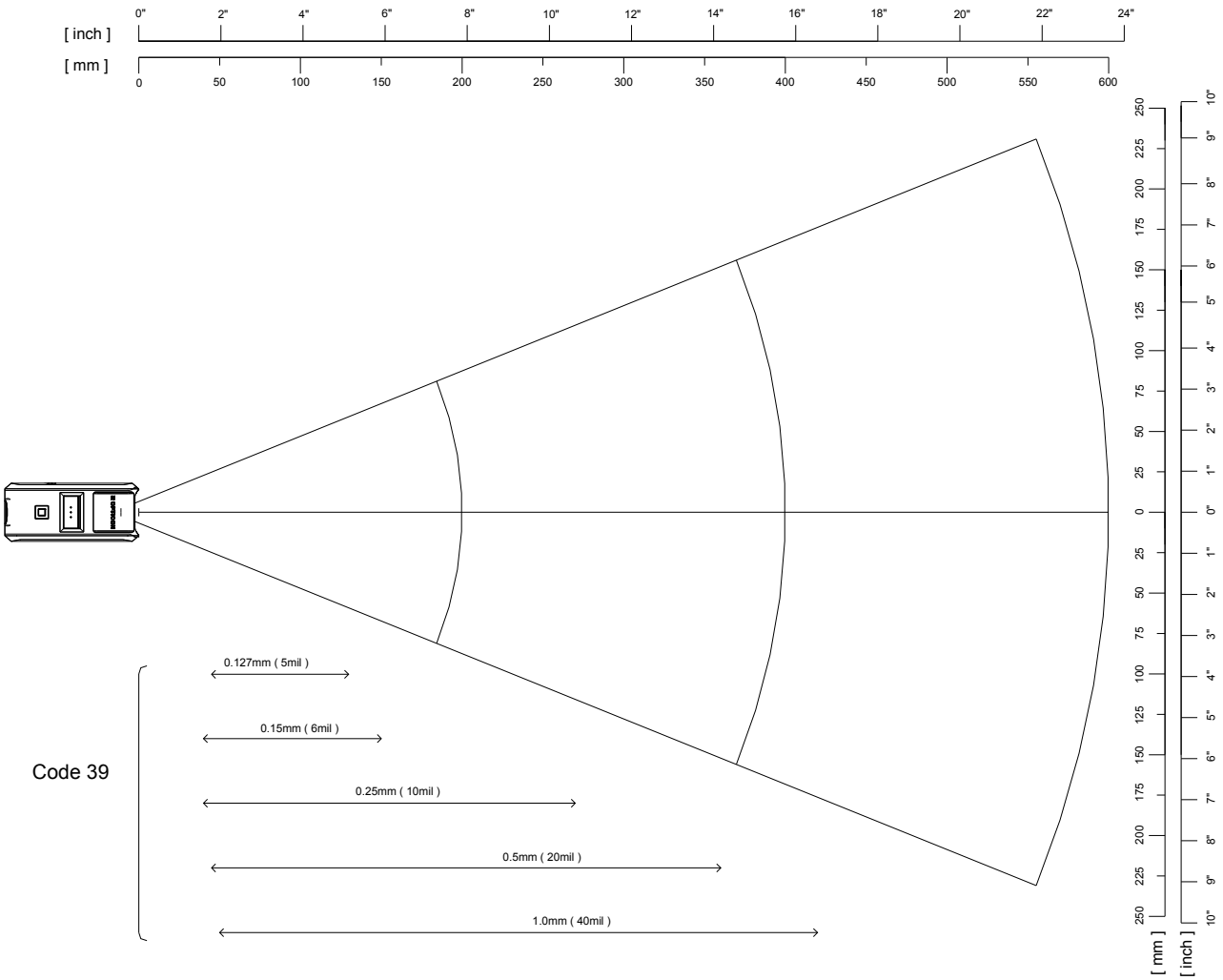

Figure 5: Scan Area and Depth of Field

8.3 Printed Contrast Signal (PCS)

PSC 0.3 or higher (70% or higher reflectivity of space and quiet zone)

$$PCS = \frac{\text{Reflectance of white space} - \text{Reflectance of black bar}}{\text{Reflectance of white space}}$$

Note:
Be sure to keep the optical window clean without dirt or scratches, or it may have a detrimental effect on the reading characteristics.

8.4 Minimum Resolution

Minimum Resolution 0.076mm

<Conditions>

Barcode	Code 39 specified in Section 8.1
Distance	60 mm from the front edge of the scanner
Angle	Skew angle β = 15°

8.5 Pitch, Skew and Tilt

Pitch	: α ≦ ±30°
Skew	: β ≦ ±50° (Excluding dead zone)
Dead Zone	: β ≦ ±8 ° (Decoding may fail in some areas as a result of specular reflection)
Tilt	: γ ≦ ±20°

<Conditions>

Bar code	<Pitch, Skew and Dead Zone> Resolution 0.25 mm, 9-digit Code 39 specified in Section 8.1. <Tilt> Resolution 0.26 mm, JAN-13 specified in Section 8.1.
Distance	100 mm from the edge of the scan engine
Curvature	R = ∞
Angle	Pitch angle : β = +15°, γ = 0° Tilt angle : α = 0°, β = +15° Skew angle / Dead zone: α = 0°, γ = 0°

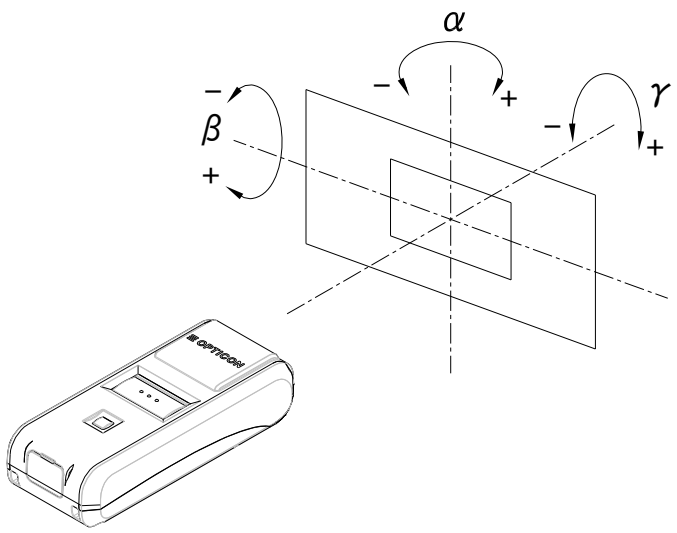

Figure 6: Pitch, Skew and Tilt

8.6 Curvature

8-digit JAN: R ≧ 15 mm
13-digit JAN: R ≧ 20 mm

<Conditions>

Barcode	Resolution 0.26 mm, JAN specified in Section 8.1.
Distance	100 mm from the edge of the scan engine
Angle	Skew angle β = +15°

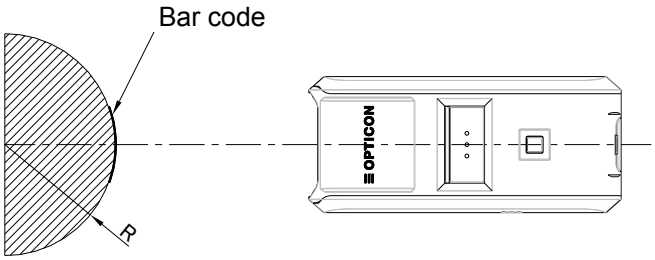

Figure 7: Curvature

Note:
The reading performance may deteriorate if there is specular reflection of the laser light, this typically will occur when the reflectivity of the barcode is high.

9 Environmental Specifications

9.1 Temperature

Scanning performance is guaranteed when the ambient temp. is within the following range:

Operating Temperature: -10 ~ 50 °C
Storage Temperature : -20 ~ 60 °C

Please charge when the temperature is between 0 and 40°C. When the temperature is over 40°C, charging may stop to prevent battery breakdown..

9.2 Humidity

Scanning performance is guaranteed when the ambient humidity within following range:
Operating Humidity: 20 ~ 85%RH (no condensation, no frost)
Storage Humidity: 20 ~ 85%RH (no condensation, no frost)

9.3 Ambient Light Immunity

Scanning performance is guaranteed when the illumination on a barcode surface is between zero and the following values:

Incandescent light:	4,000 lx
Fluorescent light:	4,000 lx (excluding high-frequency lighting)
Sunlight:	80,000 lx

<Conditions>

Barcode:	Optoelectronics Test Sample Resolution 0.25 mm, 9-digit Code 39, Quiet Zone 10 mm, N/W Ratio = 1 : 2.5
Distance:	100 mm from the front edge of the scanner
Angle:	α = 0°, β =＋15°, γ = 0°
Curvature:	R = ∞
Power-supply voltage:	5.0V

* Avoid direct or specula reflection from the laser beam as it may blind the scanners optical receiver.

9.4 Dust and Drip Proof

IEC IP54 equivalent

Protection against solid objects: Level 5 equivalent (Dust proof type)
Prevent dust ingress to inside. Even if slight dust intrusion will not inhibit normal operation.

Protection against liquids: Level 4 equivalent (Splash proof type)
Protected against water splash from any direction.

* () is JIS drip-proof type.

9.5 Vibration Strength (without packing)

There shall be no sign of malfunction after the following vibration test.
Vibration test: Increase the frequency of the vibration from 10Hz to 100Hz at an accelerated velocity of 19.6m/s^2 (2.0 G) for 30 minutes (60 minutes per cycle) in non-operating state. Repeat this in each X, Y and Z direction.

9.6 Vibration Strength (in individual packing)

There shall be no sign of malfunction after the following vibration test.
Vibration test: Increase the frequency of the vibration from 10Hz to 100Hz at an accelerated velocity of 19.6 m/s^2 (2.0 G) for 30 minutes (60 minutes per cycle) in individually packaged state. Repeat this in each X, Y and Z direction.

9.7 Drop Impact Strength (without packaging)

There shall be no sign of malfunction after the following drop test.
Drop test: Drop the scanner 18 times in total (3 times at each 6 face), from a height of 150 cm onto a concrete floor as shown below.

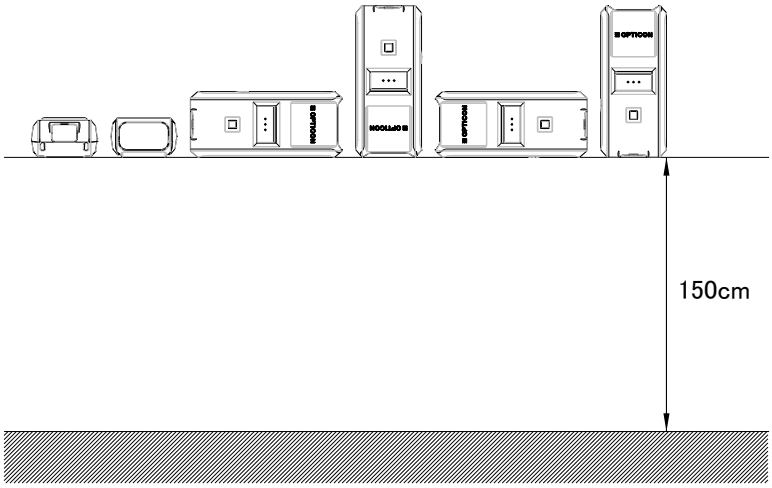

Figure 8: Drop Test

9.8 Drop Impact Strength (in individual packaging)

There shall be no sign of malfunction after the following drop test.
Drop test: Drop an individually packaged scanner 10 times in total, at any of 1 corner, 3 edges, and 6 faces, from a height of 150 cm onto a concrete floor.

9.9 Electrostatic Discharge Immunity

Air discharge	±8 kV max. (No malfunction) ±15 kV max. (No destruction)
Measurement environment	An electrostatic testing device compliant with IEC 61000-4-2
Discharge resistance	330 Ω
Charging capacitor	150 pF

10 Regulatory Compliance

10.1 LED Safety

JIS C 6802：2011 Class 2
IEC 60825-1 Ed.2: 2007 Class 2
CDRH Class Ⅱ

10.2 Product Safety

EN60950-1:2005
IEC60950-1:2006

10.3 EMC

R & TTE Directive
・EN 55024:2010
・EN 55032:2012+AC: 2013
・EN 301 489-1 V1.9.2
・EN 301 489-17 V2.2.1
・EN 300 328 V1.9.1
・EN 302 291-2 V1.1.1
FCC Part 15 Subpart C, Subpart B ClassB

Federal Communications Commission Notices

This device complies with FCC radiation exposure limits set forth for an uncontrolled environment.
This product complies with Part 15 of the FCC Rules. Operation is subject to the following two conditions:
(1) this device may not cause harmful interference, and
(2) this device must accept any interference received, including interference that may cause undesired operation.

Harmful Interference Notice
This product has been tested and complies with the specifications for a Class B digital device, pursuant to Part 15 of the FCC Rules. These limits are designed to provide reasonable protection against harmful interference in a residential installation. This equipment generates, uses, and can radiate radio frequency energy and, if not installed and used according to the instructions, may cause harmful interference to radio communications. However, there is no guarantee that interference will not occur in a particular installation. If this equipment does cause harmful interference to radio or television reception, which is found by turning the equipment off and on, the user is encouraged to try to correct the interference by one or more of the following measures:
- Reorient or relocate the receiving antenna
- Increase the separation between the equipment or devices
- Connect the equipment to an outlet other than the receiver's
- Consult a dealer or an experienced radio/TV technician for assistance

Changes or modifications not expressly approved by the party responsible for compliance could void the user’s authority to operate the equipment.

VCCI Class B

This is a Class B product, to be used in a domestic environment, based on the Technical Requirement of the Voluntary Control Council for Interference from Information Technology Equipment (VCCI). If this is used near a radio or television receiver in a domestic environment, it may cause radio interference.

10.4 Other

- Bluetooth logo certification
- MFi license

"Made for iPod," "Made for iPhone," and "Made for iPad" mean that an electronic accessory has been designed to connect specifically to iPod, iPhone, or iPad, respectively, and has been certified by the developer to meet Apple performance standards.Apple is not responsible for the operation of this device or its compliance with safety and regulatory standards. Please note that the use of this accessory with iPod, iPhone, or iPad may affect wireless performance.

Made for iPod iPhone iPad

- Certification for Construction Design of Specified Radio Equipment

・Classification of Specified Radio Equipment	Article 2 Paragraph 1, Item 19 Low power data communication system in 2.4 GHz band
・Model Name	OPA-26X1
・Certificate Number	201-125603

11 RoHS

RoHS compliance.

RoHS: The restriction of the use of certain hazardous substances in electrical and electronic equipment, 2011/65/EU

12 Reliability

MTBF (Mean Time Between Failures) 50,000 hours

13 Precautions

13.1 Precaution against Laser Light

- Do not stare into the laser light from the scanning window.
  It may harm your eyes.
- Do not point the laser directly at others' eyes.
  It may harm their eyes.
- Do not stare into the beam with optical instruments.
  It may harm your eyes.
- Use of controls or adjustments or performance of procedures other than those specified herein may result in hazardous radiation exposure.

13.2 Handling

Handle this product carefully. Do not deliberately subject it to any of the following.

(1) Shock:
- Do not drop this product from a height greater than specified in this manual.
- Do not place this product under or between any heavy items.
- Do not swing the cable around.

(2) Temperature Conditions:
- Do not use this product at temperatures outside the specified range.
- Do not pour boiling water on this product.
- Do not throw this product into a fire.

(3) Foreign Materials:
- Do not immerse this product in water or other liquid.
- Do not expose this product to chemicals.

Others
- Do not disassemble this product.
- Do not use this product near a radio or a TV. It may cause reception problems.
- This product may be affected by a momentary voltage drop caused by lightning.
- Please use within the range of operating voltage. Using outside of operating voltage may cause malfunction.
- Do not attach piece of metal or metal foil to the back of charging coil stored part and NFC coil stored part. Also, do not fix anything that prevents placing to charging cradle.
- Please securely close the USB cap to keep the waterproof.
- Do not pull strong, fold and bend the cables.
- Do not add shock or apply load to jack and connector.
- When charging is completed, please remove USB cable from connector.

13.3 Radio Law

This product qualifies as specified radio equipment for radio stations of 2.4 GHz band data communication system and has obtained the Certification for Construction Design of Specified Radio Equipment. Therefore, radio station license is not required in Japan.

The following activities are prohibited under the Radio Law:
- Remodelling and disassembly
- Peeling off the certificate label

Do not use this equipment under the following environment, as radio interference may affect other device and end up with causing physical or material damage.
- Safety apparatus and medical device for human body protection
- Environment where is concerned to cause serious damage

13.4 Bluetooth

・This product supports Bluetooth wireless communication with other Bluetooth devices that have the same profile
・This product complies with Bluetooth standards; however, its communication performance with untested devices is not guaranteed.
・Bluetooth devices use the 2.4 GHz frequency band that is shared among other devices. It may affect the communication speed and distance between this product and the host device.
・The communication speed and distance vary depending on the interference and radio wave condition between this product and the host device.

13.5 Frequency Band

This product uses the 2.4 GHz frequency band. Read carefully the followings before using this product.

In the frequency band of this product, scientific, medical and industrial devices including microwaves are used. Also other radio stations including local private radio station for mobile object identification requiring license for such as manufacturing lines at factories, specific power-saving radio station requiring no license and amateur radio station are managed.

1. Make sure that “other radio stations” are not managed in the frequency band 2.4 GHz before using this product.
2. In case that radio interference occurs between this product and “other radio stations,” change the service space immediately, or stop transmitting radio wave to avoid the interference.
3. If you have any questions or troubles, please contact our sales office.

* This specification manual is subject to change without prior notice.

14 Product Labels

The product labels are affixed to the scanner as shown below.

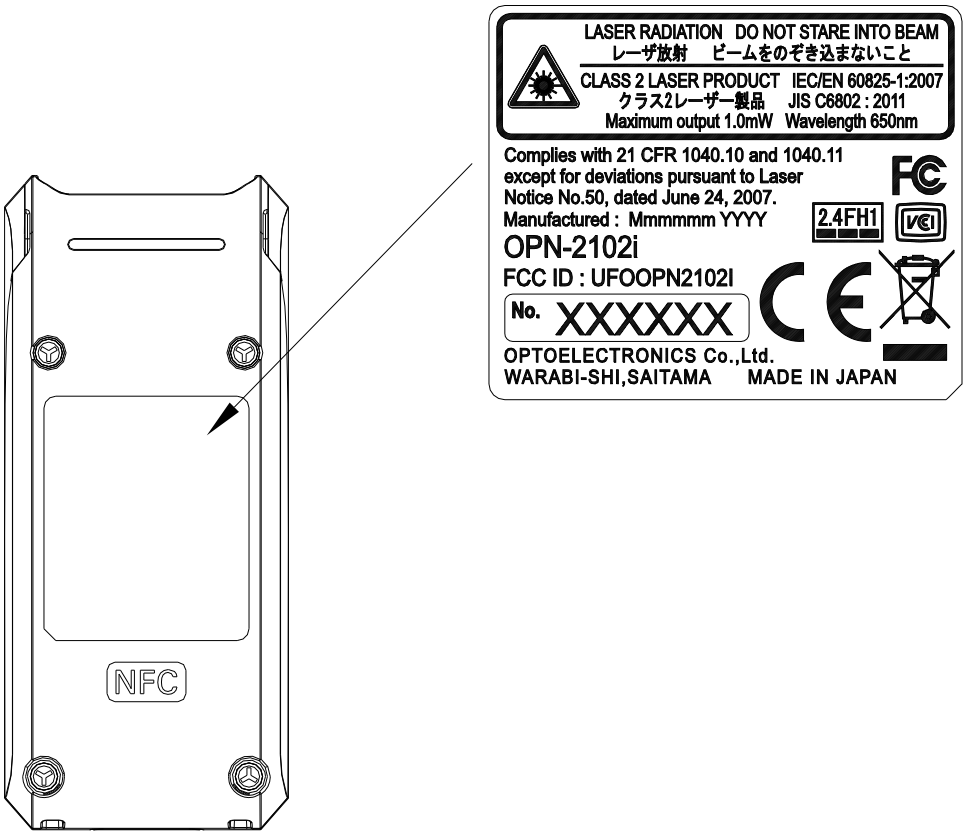

Figure 9: Product Label Position

15 Packaging Specifications

15.1 Individual Packaging

Assembled package size: Approx. 125 × 112 × 40 (WDH mm)
Weight: Approx. 140g

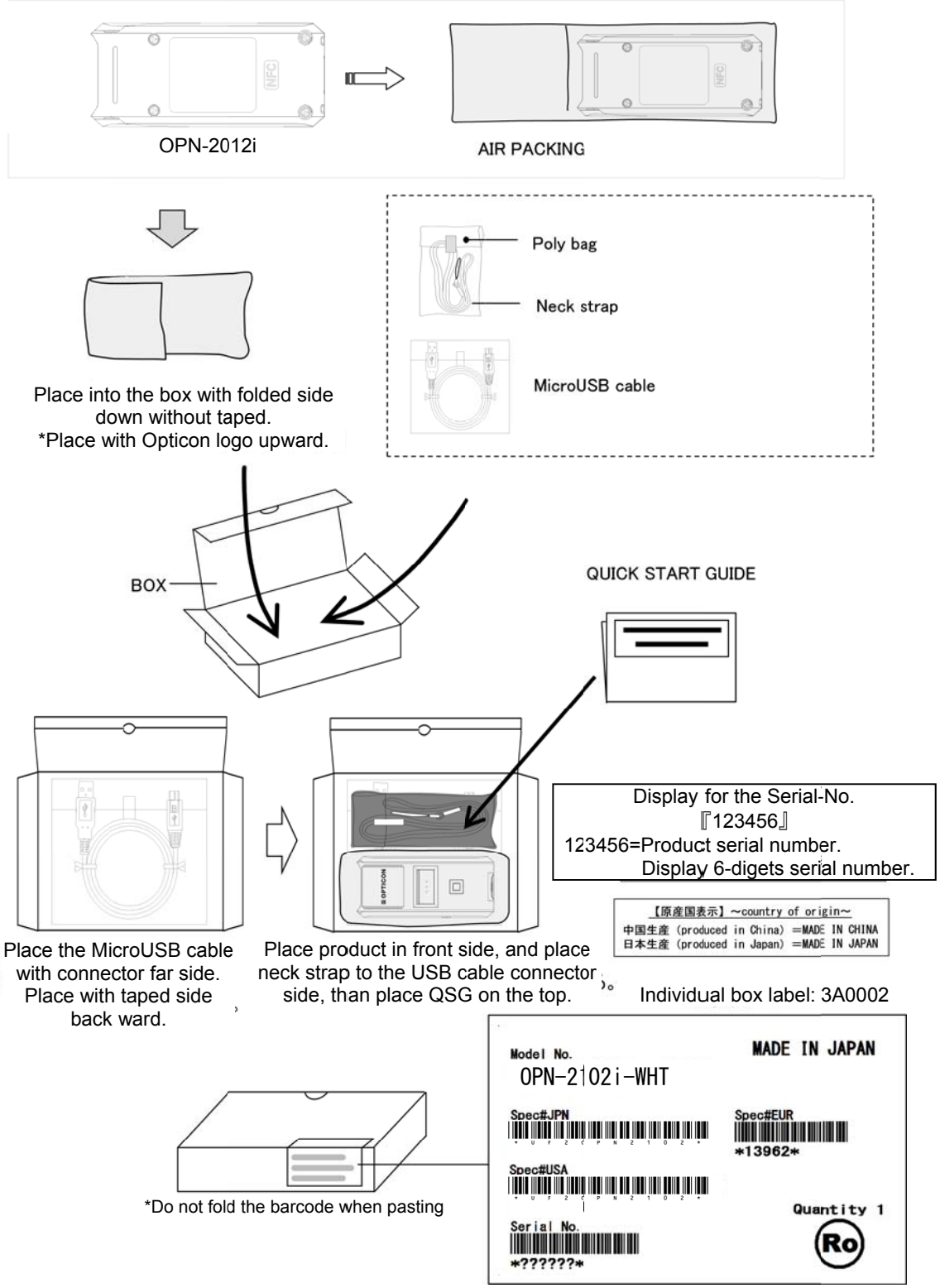

Figure 10: Individual Packaging

15.2 Collective Packaging

100pcs per box
Assembled package size : Approx. 595 × 520 × 245 (WDH mm)
Weight: Approx. 15kg

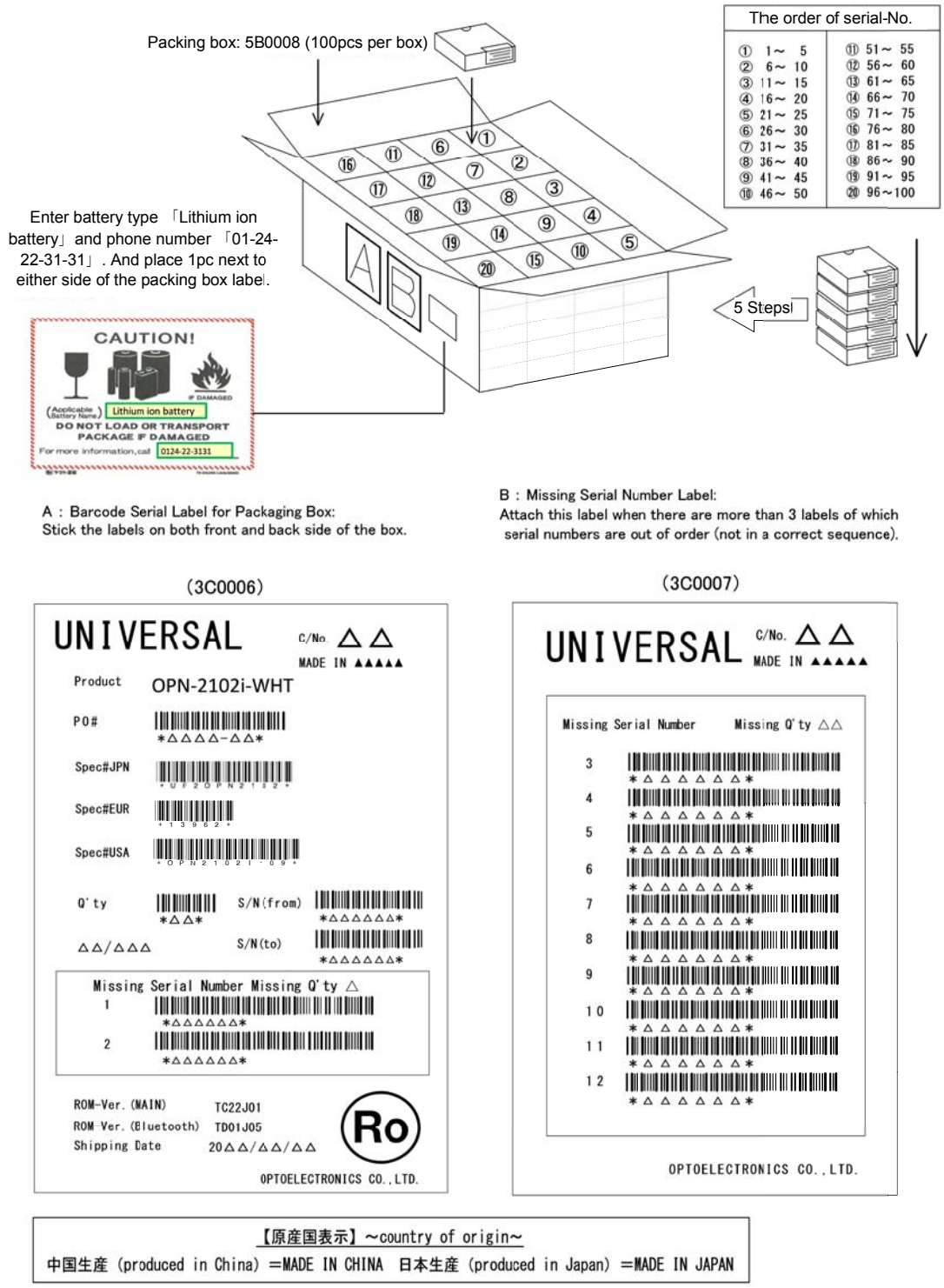

Figure 11: Collective Packaging

16 Physical Features

16.1 Dimensions

83.0 × 36.0 × 21.5 (DWH mm)

16.2 Weight

Approx. 60 g (excluding accessories)

16.3 Mechanical Drawing

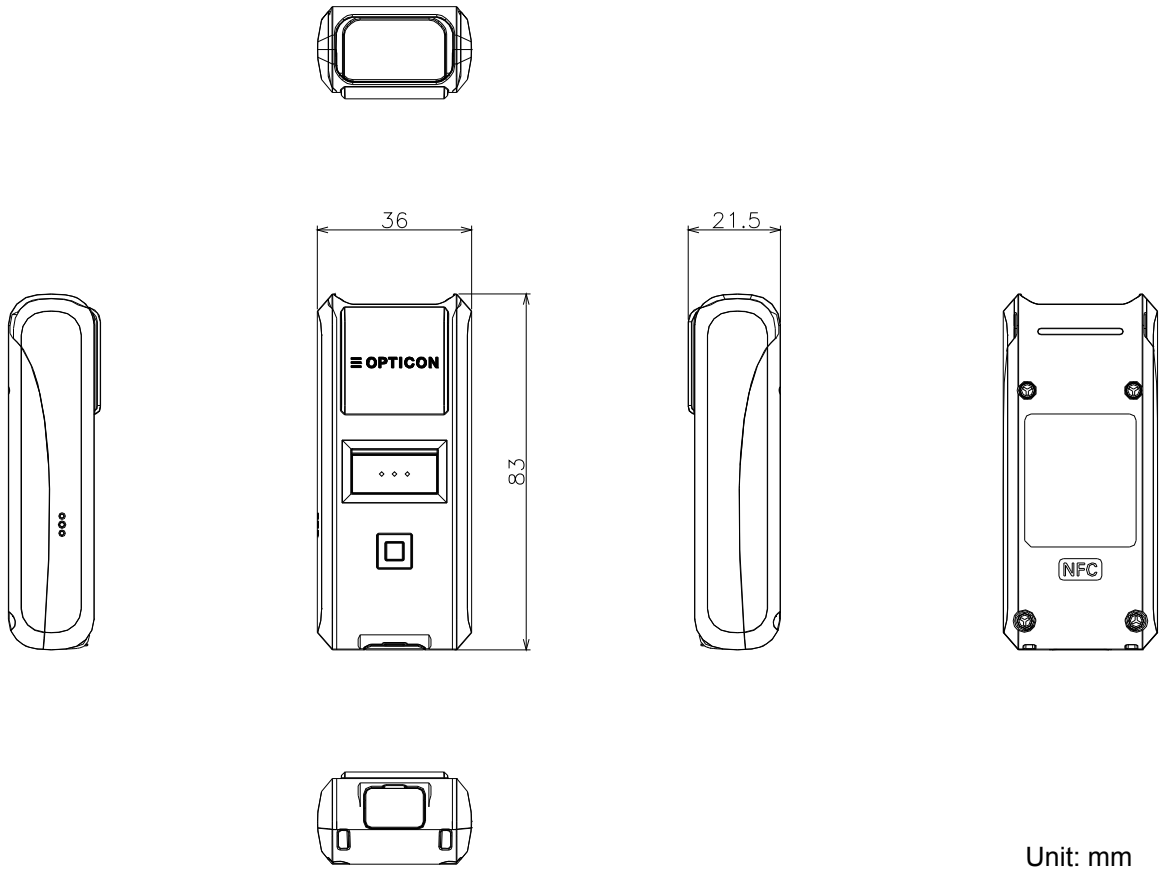

Unit: mm

Figure 12: Mechanical Drawing

17 Supported Symbologies

17.1 Default Setting

The scanner is set to default by reading the following menu label.
Recorded contents of the NFC tag will also return to default.

Function	Menu label	Menu code
SET	Z Z	ZZ
Default	S 0	SO
END	Z Z	ZZ

17.2 Supported Symbologies

17.2.1 1D Barcodes

Code type	Default	Minimum length	Note
UPC	○	-	
UPC Add-on 2 UPC Add-on 5			
EAN (JAN)	○	-	
EAN Add-on 2 EAN Add-on 5			
EAN-13	○		
EAN-13 Add-on 2 EAN-13 Add-on 5			
EAN-8	○		
EAN-8 Add-on 2 EAN-8 Add-on 5			
Code 39	○	1	Not transmit ST/SP
Tri-Optic	○	-	Not transmit ST/SP
Codabar (NW7)	○	5	Not transmit ST/SP
Industrial 2 of 5	○	5	
Interleaved 2of 5	○	6	
S-Code		5	
Code 128	○	1	GS1 conversion (setting required)
Code 93	○	1	
IATA	○	5	
MSI/Plessey	○	3	
UK/Plessey		2	
TELEPEN	○	1	
Code 11		1	
Matrix 2 of 5		5	
Chinese Post Matrix 2 of 5		-	
Korean Postal Authority		-	

17.2.2 GS1 Databar, Composite Code

Code type	Default	Note
GS1 DataBar ・GS1 DataBar Omnidirectional ・GS1 DataBar Truncated ・GS1 DataBar Stacked ・GS1 DataBar Stacked Omnidirectional		GS1 conversion (setting required)
GS1 DataBar Limited		
GS1 DataBar Expanded ・GS1 DataBar Expanded ・GS1 DataBar Expanded Stacked		