SPECIFICATIONS MANUAL

OPN-3102i

Data Collector with Bluetooth

This manual provides specifications for the OPN-3102i Bluetooth data collector with 2D imager scanner.

1st

OPTICON

The information in this document is subject to change without notice.

Document History

Model Number:	OPN-3102i	Specification Number:	SS16057
Edition:	1st	Original Spec Number:	(SS15053)
Date:	30-September-2016		

2016 Copyright Opticon. All rights reserved.

This manual may not, in whole or in part, be copied, photocopied, reproduced, translated or converted to any electronic or machine readable form without prior written consent of Opticon.

Limited Warranty and Disclaimers

PLEASE READ THIS MANUAL CAREFULLY BEFORE INSTALLING OR USING THE PRODUCT.

Serial Number

A serial number appears on all Opticon products. This official registration number is directly related to the device purchased. Do not remove the serial number from your Opticon device. Removing the serial number voids the warranty.

Warranty

Unless otherwise agreed in a written contract, all Opticon products are warranted against defects in materials and workmanship for two years after purchase excluding batteries. Opticon will repair or, at its option, replace products that are defective in materials or workmanship with proper use during the warranty period. Opticon is not liable for damages caused by modifications made by a customer. In such cases, standard repair charges will apply. If a product is returned under warranty and no defect is found, standard repair charges will apply. Opticon assumes no liability for any direct, indirect, consequential or incidental damages arising out of use or inability to use both the hardware and software, even if Opticon has been informed about the possibility of such damages.

Packaging

The packing materials are recyclable. We recommend that you save all packing material to use should you need to transport your data collector or send it for service. Damage caused by improper packaging during shipment is not covered by the warranty.

Trademarks

Trademarks used are the property of their respective owners.

Opticon Inc. and Opticon Sensors Europe B.V. are wholly owned subsidiaries of OPTOELECTRONICS Co., Ltd., 12-17, Tsukagoshi 4-chome, Warabi-shi, Saitama, Japan 335-0002.
TEL +81-(0) 48-446-1183; FAX +81-(0) 48-446-1184

SUPPORT

USA

Phone: 800-636-0090
Email: support@opticonusa.com
Web: www.opticonusa.com

Europe

Email: support@opticon.com
Web: www.opticon.com

Revision History

Product Name : OPN-3102i

Edition	Date	Page	Section	Description of Changes
1st	2016/09/30	-	-	

Contents

1 Abstract 6
2 Overview 6
3 Basic Specifications 7
4 Detailed View 10
5 Electrical Specifications 11
5.1 USB 11
5.2 Wireless Charging 11
6 Interface Specifications 11
6.1 USB Interface 11
6.1.1 Connector 11
6.1.2 USB Interface Circuit 11
6.2 Bluetooth 12
6.3 NFC Tag 12
7 Optical Specifications 13
7.1 Basic Specifications 13
7.2 Aiming Pattern 14
8 Technical Specifications 15
8.1 Barcode Test Sample 16
8.2 Scan Area and Depth of Field 17
8.3 Printed Contrast Signal (PCS) 19
8.4 Minimum Resolution 19
8.5 Barcode Width 19
8.6 Pitch, Skew and Tilt 20
8.7 Curvature 20
8.8 Scanning from LCD Screen 21
8.9 Motion Tolerance 21
9 Environmental Specifications 22
9.1 Temperature 22
9.2 Humidity 22
9.3 Ambient Light Immunity 22
9.4 Dust and Drip Proof 22
9.5 Vibration Strength (without packing) 23
9.6 Vibration Strength (in individual packing) 23
9.7 Drop Impact Strength (without packaging) 23
9.8 Drop Impact Strength (in individual packaging) 23
9.9 Electrostatic Discharge Immunity 23
10 Regulatory Compliance 24
10.1 LED Safety 24
10.2 Product Safety 24
10.3 EMC 24

10.4 Other 25
11 RoHS 25
12 Reliability 25
13 Precautions 25
13.1 Radio Law 26
13.2 Bluetooth 26
13.3 Frequency Band 26
14 Product Labels 27
15 Packaging Specifications 28
15.1 Individual Packaging 28
15.2 Collective Packaging 29
16 Physical Features 30
16.1 Dimensions 30
16.2 Weight 30
16.3 Mechanical Drawing 30
17 Supported Symbologies 31
17.1 Default Setting 31
17.2 Supported Symbologies 31
17.2.1 1D Barcodes 31
17.2.2 GS1 Databar, Composite Code 32
17.2.3 2D Codes 32

Table of Figures

Figure 1: Detailed View 10
Figure 2: micro USB B Connector 11
Figure 3: Interface Circuit (USB) 11
Figure 4: Aiming Pattern and Imaging Range 14
Figure 5: Scanning conditions 15
Figure 6: Scan Area and Depth of Field 18
Figure 7: Wide Barcode 19
Figure 8: Pitch, Skew and Tilt 20
Figure 9: Curvature 20
Figure 10: Motion Tolerance 21
Figure 11: Drop Test 23
Figure 12: Product Label Position 27
Figure 13: Individual Packaging 28
Figure 14: Collective Packaging 29
Figure 15: Mechanical Drawing 30

1 Abstract

This manual provides specifications for the OPN-3102i compact 2D data collector with built-in Bluetooth.

2 Overview

The OPN-3102i is 2D imager scanner built-in and output scanned barcode data using the Bluetooth interface.

- OPN-3102i is handy and simple data collector.
- All barcode data scanned is transmitted to a host device through the USB interface or Bluetooth.
- The scanner can work with many Bluetooth-enabled host devices, such as PCs, tablet PCs and smart phones.
- Bluetooth SPP (Serial Port Profile) and HID (Human Interface Device Profile) are implemented.
- Built-in NFC tag facilitate the Bluetooth connection
- The scanner can read barcodes from LCD screens.
- A green LED aiming line toward a target barcode can help the users find the appropriate scanning position.
- Alcohol can be used to wipe the scanner clean
- The power source is 3.7 V 600 mAh (typ.) Li-ion polymer battery.
- The charging is done through a dedicated charging cradle CRD-3000 or USB interface.
- The scanner is Apple MFi certified.

3 Basic Specifications

Item		Specification		Note
Control Section	CPU	32 bit CISC / 96 MHz		
	FROM	512 Kbyte + 32 Kbyte		
	SRAM	96 Kbyte		
	FROM (storage)	1 Mbyte		For data area only
Input Section	Key type	2 key: trigger, function		
Indicator	LED	2 bi-colors LEDs (red, green) and 1 blue LED		
	Buzzer	Loudness (3-level) / tone adjustable		
	Vibration motor	Strength (3-level) / duration adjustable		
RTC	Contents	Year, month, date, hour, minute, second		Data and time are lost when the main battery is removed.
	Accuracy	± 90 seconds per month		
Interface	Bluetooth	Frequency	2402 ~ 2480 MHz	
		Specification	Bluetooth Ver 2.1 compliant	
		Communication distance	10 m	Not guaranteed.
		Output level	Class 2	Max output 4 dBm
		Profile	SPP / HID	
	NFC tag	ISO/IEC 14443 TYPE A, TYPE B JISX6319-4		
	USB	・Full-Speed 12Mbps (HID/COM) ・Hi-Power Bus-powered supported		
Optical Section	Scanning method	VGA CMOS area sensor		
	Scanning light source	1 Warm-White LED		
	Aiming light source	1 green LED		
	Effective pixels	0.30 million pixels		
	View angle	Horizontal: about 38.0° Vertical: about 26.4°		
Supported 1D Symbologies	Symbologies	UPC-A, UPC-A Add-on, UPC-E, UPC-E Add-on, EAN-13, EAN-13 Add-on, EAN-8, EAN-8 Add-on, JAN-8, JAN-13, Code 39, Tri-Optic, NW-7, Industrial 2 of 5, Interleaved 2 of 5, S-Code, IATA, Code 93, Code 128, MSI/Plessey, UK/Plessey, TELEPEN, Matrix 2 of 5, Chinese Post Matrix 2 of 5, Code 11, Korean Postal Authority code, Postal Code		Refer to Chapter 17. for details
	Minimum resolution	Code 39 : 0.1 mm		PCS 0.9
	Curvature	R ≥ 16 mm (10-digit Codabar 0.15mm) R ≥ 20 mm (12-digit UPC)		PCS 0.9
	Barcode width	100 mm wide 0.2 mm resolution Code 39 (DOF 150 mm) is readable:		

Item			Specification		Note
	Motion Tolerance		UPC 100% moving at 2m/sec (DOF 100 mm) is readable:		
	Depth of Field	Code 39	Resolution (0.127)	90 ~ 110	
			Resolution (0.254)	65 ~ 185	
			Resolution (0.508)	65 ~ 260	
		Code 128	Resolution (0.2)	85 ~ 165	
		UPC	Resolution (0.33)	55 ~ 195	
GS1/Composite	Symbologies		GS1 DataBar , GS1 DataBar Limited, GS1 DataBar Expanded, Composite GS1 DataBar, Composite GS1-128, Composite EAN, Composite UPC		GS1 DataBar: formerly called "RSS"
	Minimum resolution		GS1 DataBar : 0.127mm Composite Code: 0.127 mm		
Supported 2D Symbologies	Symbologies		PDF417 , MicroPDF417 , Codablock F , QR Code , MicroQR Code , Data Matrix (ECC 0 - 140 / ECC 200) , MaxiCode(Modes 2 to 5) , Aztec Code , Chinese-sensible code		Disable Code 128 when Codablock F is enabled.
	Minimum resolution (mm)		PDF417 : 0.169 mm QR Code : 0.169 mm DataMatrix : 0.169 mm		PCS 0.9
	Depth of field (mm)	PDF417	Resolution (0.169)	85~ 135	PCS 0.9 TBD
			Resolution (0.254)	65 ~ 180	
		QR Code	Resolution (0.212)	90 ~ 110	
			Resolution (0.381)	55 ~ 180	
		DataMatrix	Resolution (0.254)	85 ~ 135	
Common	Scan angle		Pitch : ±70°		
			Skew : ±70°		
			Tilt : ±360°		
	Minimum PCS		0.2 or more		MRD 32% or more
	Scanning from LCD screen		White brightness	30 cd/m2 or more	
			Contrast ratio	100:1 or more	
Power Section	Main battery		Lithium-polymer 600 mAh (typ.)		
	Up-time		10 hours or more		*1
	Feeding system		Electromagnetic guidance wireless charging, microUSB		
	Operating (charging) voltage		4.5 ~ 5.5V		Charging with USB
	Current consumption	Charging	Less than 500 mA		
Environmental Specifications	Temperature	Operating	-10 ~ 50°C		
		Storage	-20 ~ 60°C		
	Humidity	Operating	20 ~ 85%		No condensing No frost
		Storage	20 ~ 85%		
	Ambient light immunity	Fluorescent	10,000 lx or less		
		Sunlight	100,000 lx or less		

Item			Specification	Note
	Vibration		10 Hz ~ 100 Hz, acceleration of 19.6 m/s^2, 60 minutes per cycle, repeat once in each X, Y and Z-direction	
	Drop		Drop the scanner 18 times (6 faces x 3) from a height of 150 cm onto a concrete floor	
	Dust and drip proof		IP54 equivalent	
Regulatory Compliance	LED safety		IEC 62471:2006 Exempt_Group	Peak Wavelength: 624 nm
	Product safety		EN60950-1:2005 IEC60950-1:2006	
	EMC		EN 55024:2010 EN 55032:2012+AC :2013 EN 301 489-1 V1.9.2 EN 301 489-17 V2.1.1 EN 300 328 V1.9.1 EN 302 291-2 V1.1.1 FCC Part 15 Subpart C, Subpart B ClassB VCCI Class B	For residential, commercial and light-industrial environments
	European conformity		CE Marking	
			Certification for Construction Design of Specified Radio Equipment	
	Other		Bluetooth logo certification MFi license	
Immunity Test	ESD	No distraction	Air discharge (direct): ±15 kV	Conditions: IEC61000-4-2 compliant
		No malfunction	Air discharge (direct): ±8 kV	
Physical Features	Dimensions		83.0 × 36 × 21.5 (WDH mm)	
	Weight		Approx. 60 g	Excluding accessories

*1: When a barcode is read twice every 10 seconds at room temperature in a constant Bluetooth connection (SPP master mode).

4 Detailed View

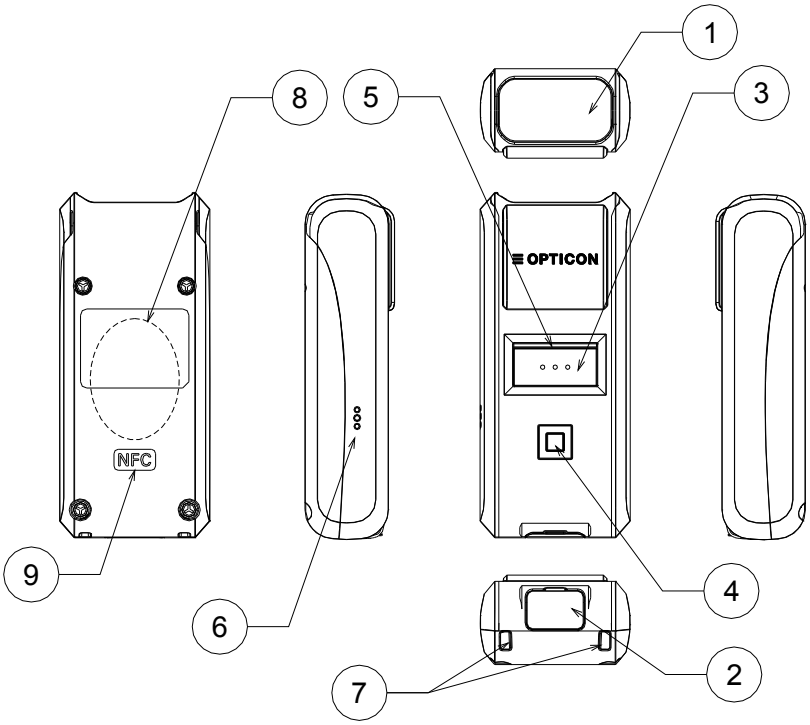

Figure 1: Detailed View

No	Name	Description
1	Scan Window	LED illumination is emitted from this window to read barcodes.
2	USB Cap	Cap for USB connector part used to make the scanner IP54 water tight.
3	Trigger Key	Press this key to enable the laser and start reading barcodes.
4	Function Key	The function of this key depends on the installed application.
5	LED	Indicates operating status, such as bar code reading, Bluetooth connection, warning etc.
6	Buzzer Orifice	Holes for buzzer.
7	Strap Orifice	Holes for attaching a hand strap.
8	Charging Coil	The charging coil is located here with which the dedicated cradle can supply power to the scanner.
9	NFC	This is the location of the NFC tag. Hold an NFC reader close to this area when the tag has to be read.

5 Electrical Specifications

5.1 USB

Supply Voltage	: 4.5-5.5V
Bus-power (Class)	: 500mA max (Hi-Power)
Current consumption	: Less than 500mA

5.2 Wireless Charging

Feeding system	: Electromagnetic induction
Power consumption	: Less than 5W

6 Interface Specifications

The OPN-3102i supports two types of interfaces; USB and Bluetooth.

6.1 USB Interface

Interface is Full Speed USB interface.

6.1.1 Connector

Signal Name	Contact Number
VCC	1
DATA(-)	2
DATA(+)	3
(NC)	4
GND	5

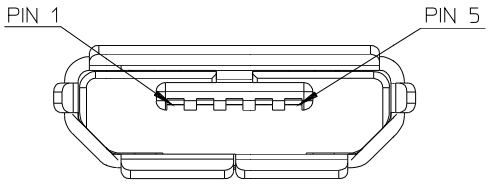

Figure 2: micro USB B Connector

6.1.2 USB Interface Circuit

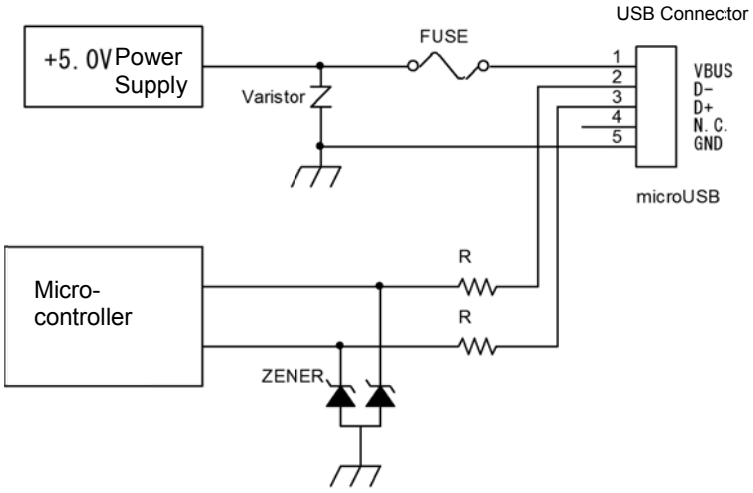

Figure 3: Interface Circuit (USB)

6.2 Bluetooth

The specifications of the OPN-3102i Bluetooth interface are as follows:

Frequency	: 2402 ~ 2480 MHz
Specification	: Bluetooth Ver 2.1 compliant
Communication distance	: 10 m
Output level	: Class 2 (max 4 dBm)
Implemented profile	: SPP / HID
Communication configuration	: 1 to 1
Operating mode in communication	: Master / Slave mode
Security mode	: Authentication supported
Encryption	: Encryption supported

6.3 NFC Tag

OPN-3102i has NFC tag built-in which record Bluetooth device address.

Frequency: 13.56MHz

Standard : ISO/IEC 14443 TYPE A, TYPE B and JISX6319-4

Recorded Contents: :

Total 928 byte	
	NDEF
	Record #1 type: ”application/vnd.bluetooth.ep.oob” OOB data length: 8 Byte MAC address: 00:12:6A:xx:xx:xx
	Record #2 type: ”T” TEXT data length: 15 Byte TEXT data: ”00126Axxxxxx”
	Free area
Reserved area	

*xx will differ according to product.

Rewriting from external: possible

7 Optical Specifications

7.1 Basic Specifications

Item		Characteristics
Scan method	CMOS area sensor (white / black)	-
Number of effective pixel	(Column) × (Row)	640 × 480 dots
Image capture speed (*1)	Frame rate	100 fps
Focal distance	Distance from the front edge of scanner	109.2 mm
View angle	Horizontal	Approx. 38.0°
	Vertical	Approx. 28.9°
	Diagonal	Approx. 46.4°
Illumination light source (LED × 1)	Color	Warm white
	Color temperature	2600～3700K
	Radiant efficiency(*2)	114lm/W
Aiming light source (LED × 1)	Color	Green
	Peak wavelength	535 nm
	Radiant efficiency (*2)	114lm/W

*1 The fastest seed of image capture
*2 Reference value extracted from the LED datasheet.

7.2 Aiming Pattern

The aiming is used for the following purpose:
1. Fill light to recognize the appropriate reading range.
2. Fill light when auto trigger is used.

The aiming specifications are as follows:
- The horizontal width of the imaging field of view and the horizontal aiming width are equal at a distance of L=144.2±40 mm from the front edge of the scanner.
- The horizontal imaging field of view at a distance of L=144.2 mm is 0%±10% of the horizontal aiming width.

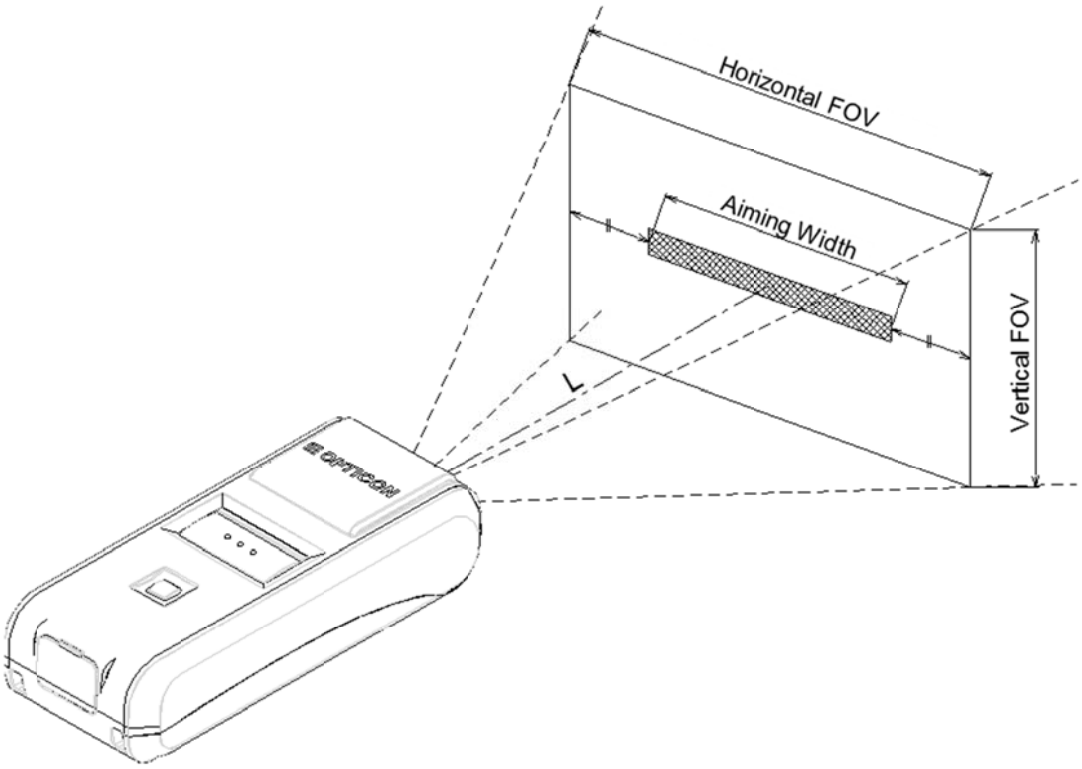

Figure 4: Aiming Pattern and Imaging Range

8 Technical Specifications

Aim the laser light at the center of a code to scan it. The conditions for technical specifications are as follows, unless otherwise specified in each section.

<Conditions>

Ambient Temperature and Humidity	Room temperature, room humidity
Ambient Light	100 ~200 lux (on the surface of a barcode)
Angles	Pitch: α = 0°, Skew: β = 15°, Tilt: γ = 0°
Curvature	R = ∞
Power Supply Voltage	5.0 V (USB)
PCS (1D and 2D)	0.9 or higher
Scanning Test	Accept the performance with 90% or more success rate for 10 tries of scan. One reading should be 2 seconds.
Barcode Test Sample (1D and 2D)	Specified below.

< Test chart >
For 1D codes, OPTOELECTRONICS test samples
For GS1 Databar, stacked codes and 2D codes, printed by a dedicated printer for barcode

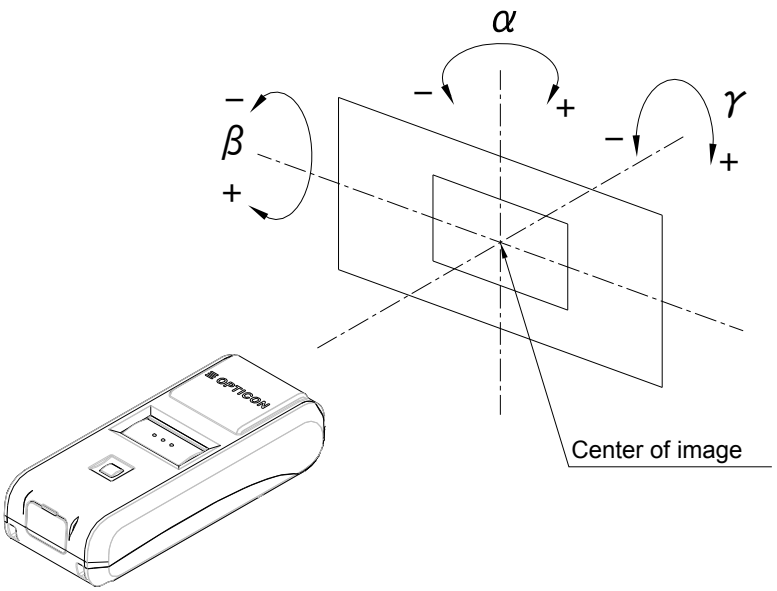

Figure 5: Scanning conditions

8.1 Barcode Test Sample

1D Barcodes

<Code 39>

Resolution	Symbology	PCS	Size (mm)	No. of Digits
0.1 mm (3.9 mil)	Code 39	0.9	8.5 × 10	4
0.127 mm (5 mil)			32 × 10	15
0.20 mm (7.9 mil)			100 × 10	31
0.254 mm (10 mil)			32.5 × 12	7
0.508 mm (20 mil)			36 × 25	4

<Code 128>

Resolution	Symbology	PCS	Size (mm)	No. of Digits
0.20 mm (7.9 mil)	Code 128	0.9	42 × 10	16

<UPC>

Resolution	Symbology	PCS	Size (mm)	No. of Digits
0.330 mm (13 mil)	12-digit UPC 12-digit EAN	0.9/0.2	31.5 × 25.0	12/13

<Codabar>

Resolution	Symbology	PCS	Size (mm)	No. of Digits
0.150 mm (6 mil)	Codabar(NW-7)	0.9	20 × 10	10

GS1 Databar/Composite

<GS1-limited>

Resolution	Symbology	PCS	Size (mm)	No. of Digits
0.169 mm (6.7 mil)	Limited	0.9	12 × 1.5	14
0.169 mm (6.7 mil)	Limited-Composite	0.9	12 × 3.0	26

2D Codes

<PDF417>

Resolution	Error Correction	PCS	Size (mm)	No. of Character
0.169 mm (6.7 mil)	Level-3	0.9	23 × 10	58
0.254 mm (10 mil)			35 × 15	

<QR Code: Model-2>

Resolution	Error Correction	PCS	Size (mm)	No. of Character
0.212 mm (8.4 mil)	M	0.9	5 × 5	44
0.381 mm (15 mil)			11 × 11	

<Data Matrix>

Resolution	Model	PCS	Size (mm)	No. of Character
0.212 mm (8.4 mil)	ECC200	0.9	4 × 4	40
0.254 mm (10 mil)			6 × 6	

* The size is outline dimensions excluding the quiet zones.

8.2 Scan Area and Depth of Field

The scanner is able to read in the area between the two arcs that are centered on the scan origin with a center line distance from the front of the scanner as indicated for each resolution.

Symbology	Resolution	Depth of Field (mm)
Code 39	0.127mm	60 ～ 105
	0.254mm	70 ～ 205
	0.508mm	80 ～ 390
Code 128	0.20mm	80 ～ 165
UPC	0.33mm	65 ～ 260
PDF417	0.169mm	65 ～ 125
	0.254mm	50 ～ 180
QR Code	0.169mm	70 ～ 95
	0.381mm	35 ～ 225
Data Matrix	0.212mm	60 ～ 130
	0.254mm	50 ～ 150

<Conditions>

Barcode Sample	The above codes specified in Chapter 8.1
Angle	α = 0°, β =＋15°, γ = 0°

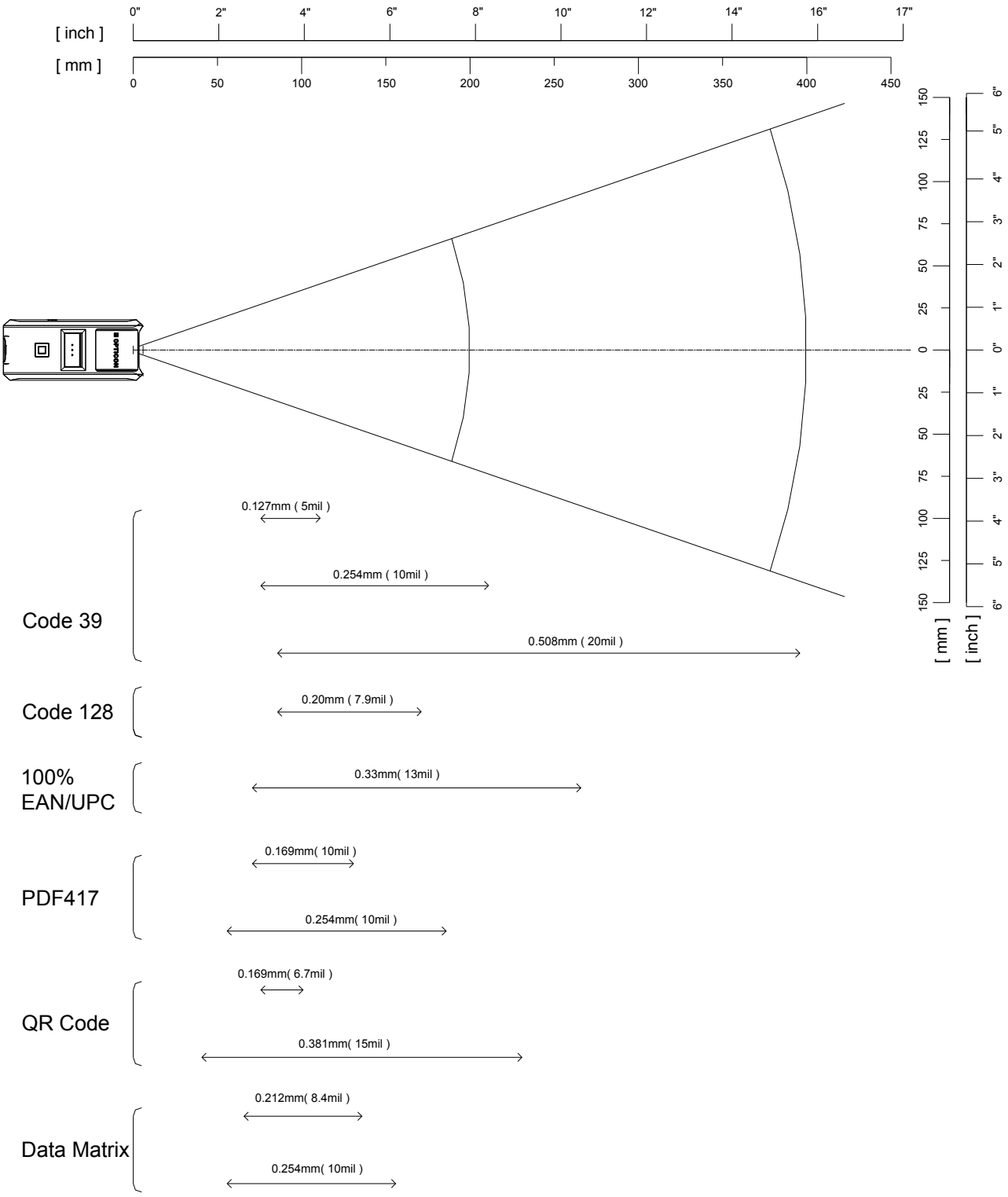

Figure 6: Scan Area and Depth of Field

8.3 Printed Contrast Signal (PCS)

0.2 or higher

<Conditions>
MRD : 10% and higher
(70% or higher reflectivity of space and quiet zone)
Distance : 125mm from the front edge of the scanner
Barcode Sample : UPC specified in Chapter 8. (Resolution: 0.33 mm, PCS: 0.3)

MRD = Minimum reflectance of white bar - Maximum reflectance of black bar

$$PCS = \frac{\text{Reflectance of white space} - \text{Reflectance of black bar}}{\text{Reflectance of white space}}$$

* Be sure to keep the optical window clean without dirt or scratches, or it may have a detrimental effect on the reading characteristics.

8.4 Minimum Resolution

1D Code : 0.1 mm (3.9 mil) Code 39 specified in Chapter 8.1
GS1-Databar : 0.127 mm (5 mil) GS1 Databar Limited specified in Chapter 8.1
Stacked Code : 0.169 mm (6.7 mil) PDF417, GS1 Databar Limited Composite specified in Chapter 8.1
2D Code : 0.169 mm (6.7 mil) QR Code, Data Matrix specified in Chapter 8.1

<Conditions>
Barcode Sample The above codes specified in Chapter 8.1
Distance 95 mm from the front edge of the scanner
Angle α = 0°, β =＋15°, γ = 0°
Curvature R = ∞

8.5 Barcode Width

Code 39 with width of 100 mm and resolution of 0.2 mm can be read

<Conditions>
Barcode Sample 0.20 mm Code 39 / PCS 0.9 specified in Chapter 8.1
Distance 150 mm from the front edge of the scanner
Angle α = 0°, β =＋15°, γ = 0°
Curvature R = ∞

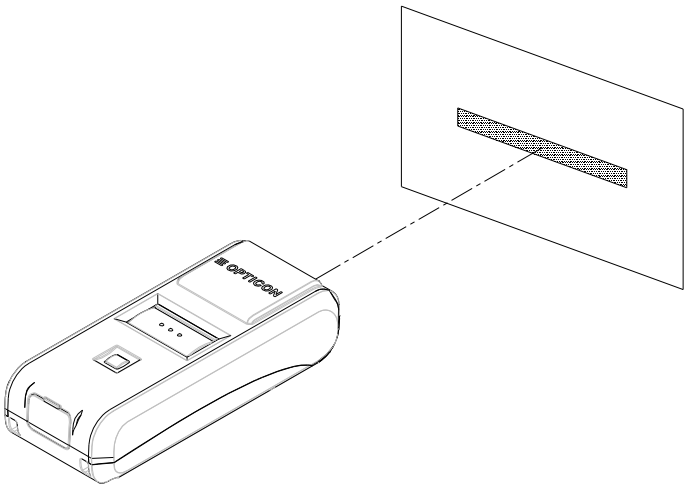

Figure 7: Wide Barcode

8.6 Pitch, Skew and Tilt

Pitch : α = ±70°
Skew : β = ±70°
Tilt : γ = ±360°

<Conditions>
Barcode Sample : 0.33 mm UPC specified in Chapter 8.1
Distance : 125 mm from the front edge of the scanner
Curvature : R = ∞
* For the pitch angle and tilt angle measurement, set the skew angle β = +15°

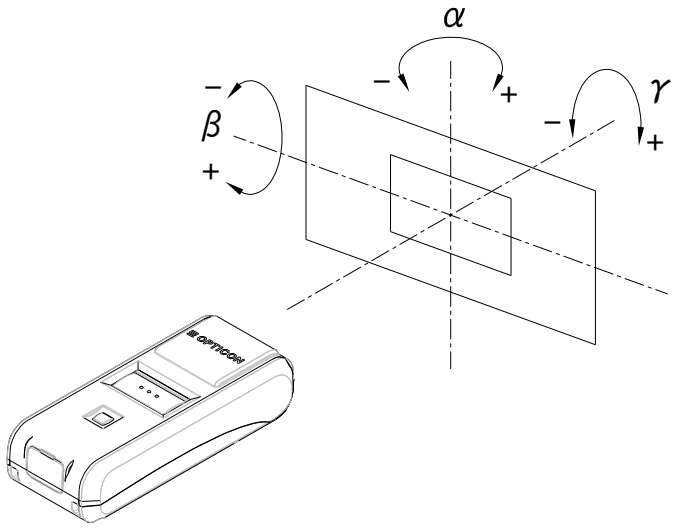

Figure 8: Pitch, Skew and Tilt

8.7 Curvature

0.33 mm 12-digit UPC: R ≧ 20 mm
0.15 mm 10-digit Codabar(NW-7): R ≧ 16 mm

<Conditions>
Barcode Sample 0.33 mm UPC, 0.15 mm Codabar specified in Chapter 8.1
Distance 105 mm from the edge of the scan engine
Angle Skew angle β = +15°

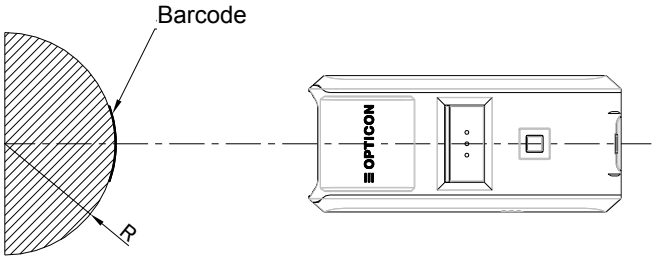

Figure 9: Curvature

Note:
The reading performance may deteriorate if there is specular reflection of the laser light, this typically will occur when the reflectivity of the barcode is high.

8.8 Scanning from LCD Screen

Barcodes displayed on LCD screens (brightness of white part 30 cd/m^2 or more, contrast ratio 100:1 or more) can be read.

<Conditions>

Barcode	: UPC, resolution 0.33 mm specified in Chapter 8.1.
Ambient light	: 100 lx or less
Distance	: 95 mm from the front edge of the scanner
Angle	: α = 0°, β = 0°, γ = 0°
LCD screen type	: Transmissive (backlight) TFT
Illumination mode	: Disable

$$\text{Contrast ratio} = \frac{\text{Brightness of white parts}}{\text{Brightness of black parts}}$$

* The barcode resolution is the value when displayed on the LCD screen.
* The width of barcode element is an integral multiple of pixel width of LCD screen.
* The reading characteristics may deteriorate due to the specular reflection of LED illumination when the reflectivity is high.

8.9 Motion Tolerance

UPC 100%/EAN can be read when it is moving at 2.54m/s.

<Conditions>

Ambient Temperature and Humidity	: Room temperature and Room humidity
Ambient Light	: 500 ~ 1000 lux
Distance	: 125 mm from the front edge of the scanner
PCS (1D and 2D)	: 0.9 or higher
Barcode Sample	: UPC 0.33mm specified in Chapter 8.1.

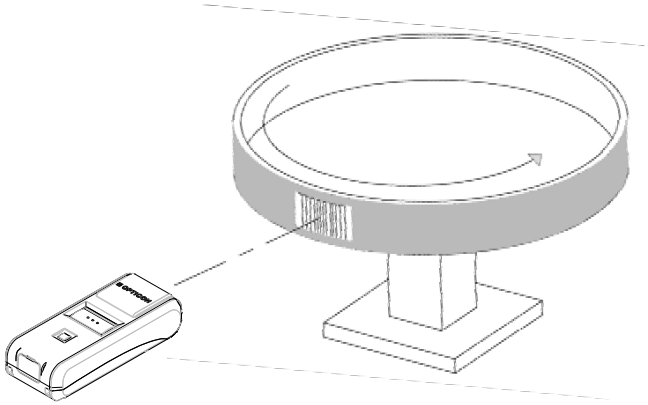

Figure 10: Motion Tolerance

* Scanning may fail due to the specular reflection of LED illumination when the reflectivity is high.

9 Environmental Specifications

9.1 Temperature

Scanning performance is guaranteed when the ambient temp. is within the following range:

Operating Temperature:	-10 ~ 50 °C
Storage Temperature:	-20 ~ 60 °C

* Please charge when the temperature is between 0 and 40°C. When the temperature is over 40°C, charging may stop to prevent battery breakdown.

9.2 Humidity

Scanning performance is guaranteed when the ambient humidity within following range:

Operating Humidity:	20 ~ 85%RH (no condensation, no frost)
Storage Humidity:	20 ~ 85%RH (no condensation, no frost)

9.3 Ambient Light Immunity

Scanning performance is guaranteed when the illumination on a barcode surface is between zero and the following values:

Incandescent light:	10,000 lx
Fluorescent light:	10,000 lx
Sunlight:	100,000 lx

<Conditions>

Barcode:	0.33 mm JAN specified in Chapter 8.1.
Distance:	95 mm from the front edge of the scanner
Angle:	α = 0°, β =＋15°, γ = 0°
Curvature:	R = ∞
Power-supply voltage:	3.7V

* Avoid direct or specula reflection from the light source as it may blind the scanners optical receiver.

9.4 Dust and Drip Proof

IEC IP54 equivalent

<u>Protection against solid objects: Level 5 equivalent (Dust proof type)</u>
Prevent dust ingress to inside. Even if slight dust intrusion will not inhibit normal operation.

<u>Protection against liquids: Level 4 equivalent (Splash proof type)</u>
Protected against water splash from any direction.

* () is JIS drip-proof type.

9.5 Vibration Strength (without packing)

There shall be no sign of malfunction after the following vibration test.
Vibration test: Increase the frequency of the vibration from 10Hz to 100Hz at an accelerated velocity of 19.6m/s^2 (2.0 G) for 30 minutes (60 minutes per cycle) in non-operating state. Repeat this in each X, Y and Z direction.

9.6 Vibration Strength (in individual packing)

There shall be no sign of malfunction after the following vibration test.
Vibration test: Increase the frequency of the vibration from 10Hz to 100Hz at an accelerated velocity of 19.6 m/s^2 (2.0 G) for 30 minutes (60 minutes per cycle) in individually packaged state. Repeat this in each X, Y and Z direction.

9.7 Drop Impact Strength (without packaging)

There shall be no sign of malfunction after the following drop test.
Drop test: Drop the scanner 18 times in total (3 times at each 6 face), from a height of 150 cm onto a concrete floor as shown below.

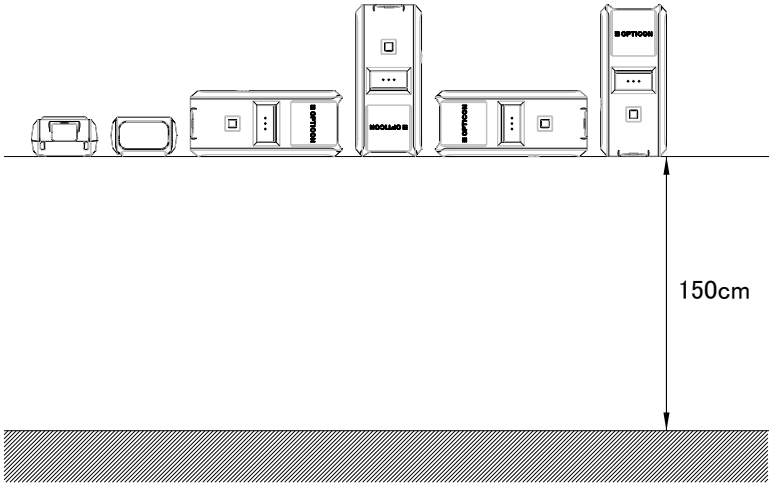

Figure 11: Drop Test

9.8 Drop Impact Strength (in individual packaging)

There shall be no sign of malfunction after the following drop test.
Drop test: Drop an individually packaged scanner 10 times in total, at any of 1 corner, 3 edges, and 6 faces, from a height of 150 cm onto a concrete floor.

9.9 Electrostatic Discharge Immunity

Air discharge	±8 kV max. (No malfunction) ±15 kV max. (No destruction)
Measurement environment	An electrostatic testing device compliant with IEC 61000-4-2
Discharge resistance	330 Ω
Charging capacitor	150 pF

10 Regulatory Compliance

10.1 LED Safety

IEC 62471:2006 Exempt_Group

10.2 Product Safety

EN60950-1:2005
IEC60950-1:2006

10.3 EMC

R & TTE Directive

- EN 55024:2010
- EN 55032:2012+AC:2013
- EN 301 489-1 V1.9.2
- EN 301 489-17 V2.1.1
- EN 300 328 V1.9.1
- EN 302 291-2 V1.1.1

FCC Part 15 Subpart C, Subpart B ClassB

Federal Communications Commission Notices

This device complies with FCC radiation exposure limits set forth for an uncontrolled environment.
This product complies with Part 15 of the FCC Rules. Operation is subject to the following two conditions:
(1) this device may not cause harmful interference, and
(2) this device must accept any interference received, including interference that may cause undesired operation.

Harmful Interference Notice
This product has been tested and complies with the specifications for a Class B digital device, pursuant to Part 15 of the FCC Rules. These limits are designed to provide reasonable protection against harmful interference in a residential installation. This equipment generates, uses, and can radiate radio frequency energy and, if not installed and used according to the instructions, may cause harmful interference to radio communications. However, there is no guarantee that interference will not occur in a particular installation. If this equipment does cause harmful interference to radio or television reception, which is found by turning the equipment off and on, the user is encouraged to try to correct the interference by one or more of the following measures:

- Reorient or relocate the receiving antenna
- Increase the separation between the equipment or devices
- Connect the equipment to an outlet other than the receiver's
- Consult a dealer or an experienced radio/TV technician for assistance

Changes or modifications not expressly approved by the party responsible for compliance could void the user’s authority to operate the equipment.

VCCI Class B

This is a Class B product, to be used in a domestic environment, based on the Technical Requirement of the Voluntary Control Council for Interference from Information Technology Equipment (VCCI). If this is used near a radio or television receiver in a domestic environment, it may cause radio interference.

10.4 Other

- Bluetooth logo certification
- MFi license

"Made for iPod," "Made for iPhone," and "Made for iPad" mean that an electronic accessory has been designed to connect specifically to iPod, iPhone, or iPad, respectively, and has been certified by the developer to meet Apple performance standards.Apple is not responsible for the operation of this device or its compliance with safety and regulatory standards. Please note that the use of this accessory with iPod, iPhone, or iPad may affect wireless performance.

Made for iPod iPhone iPad

- Certification for Construction Design of Specified Radio Equipment

・Classification of Specified Radio Equipment	Article 2 Paragraph 1, Item 19 Low power data communication system in 2.4 GHz band
・Model Name	OPA-26X1
・Certificate Number	201-125603

11 RoHS

RoHS compliance.

RoHS: The restriction of the use of certain hazardous substances in electrical and electronic equipment, 2011/65/EU

12 Reliability

MTBF (Mean Time Between Failures) 50,000 hours

13 Precautions

Handle this product carefully. Do not deliberately subject it to any of the following.

(1) Shock:
- Do not drop this product from a height greater than specified in this manual.
- Do not place this product under or between any heavy items.
- Do not swing the cable around.

(2) Temperature Conditions:
- Do not use this product at temperatures outside the specified range.
- Do not pour boiling water on this product.
- Do not throw this product into a fire.

(3) Foreign Materials:
- Do not immerse this product in water or other liquid.
- Do not expose this product to chemicals.

Others
- Do not disassemble this product.
- Do not use this product near a radio or a TV. It may cause reception problems.
- This product may be affected by a momentary voltage drop caused by lightning.

- Do not attach piece of metal or metal foil to the back of charging coil stored part and NFC coil stored part. Also, do not fix anything that prevents placing to charging cradle.
- Please securely close the USB cap to keep the waterproof.
- Do not pull strong, fold and bend the cables.
- Do not add shock or apply load to jack and connector.
- When charging is completed, please remove USB cable from connector.

13.1 Radio Law

This product qualifies as specified radio equipment for radio stations of 2.4 GHz band data communication system and has obtained the Certification for Construction Design of Specified Radio Equipment. Therefore, radio station license is not required in Japan.

The following activities are prohibited under the Radio Law:
- Remodeling and disassembly
- Peeling off the certificate label

Do not use this equipment under the following environment, as radio interference may affect other device and end up with causing physical or material damage.
- Safety apparatus and medical device for human body protection
- Environment where is concerned to cause serious damage

13.2 Bluetooth

- This product supports Bluetooth wireless communication with other Bluetooth devices that have the same profile
- This product complies with Bluetooth standards; however, its communication performance with untested devices is not guaranteed.
- Bluetooth devices use the 2.4 GHz frequency band that is shared among other devices. It may affect the communication speed and distance between this product and the host device.
- The communication speed and distance vary depending on the interference and radio wave condition between this product and the host device.

13.3 Frequency Band

This product uses the 2.4 GHz frequency band. Read carefully the followings before using this product.

In the frequency band of this product, scientific, medical and industrial devices including microwaves are used. Also other radio stations including local private radio station for mobile object identification requiring license for such as manufacturing lines at factories, specific power-saving radio station requiring no license and amateur radio station are managed.

1. Make sure that “other radio stations” are not managed in the frequency band 2.4 GHz before using this product.
2. In case that radio interference occurs between this product and “other radio stations,” change the service space immediately, or stop transmitting radio wave to avoid the interference.
3. If you have any questions or troubles, please contact our sales office.

* This specification manual is subject to change without prior notice.

14 Product Labels

The product labels are affixed to the scanner as shown below.

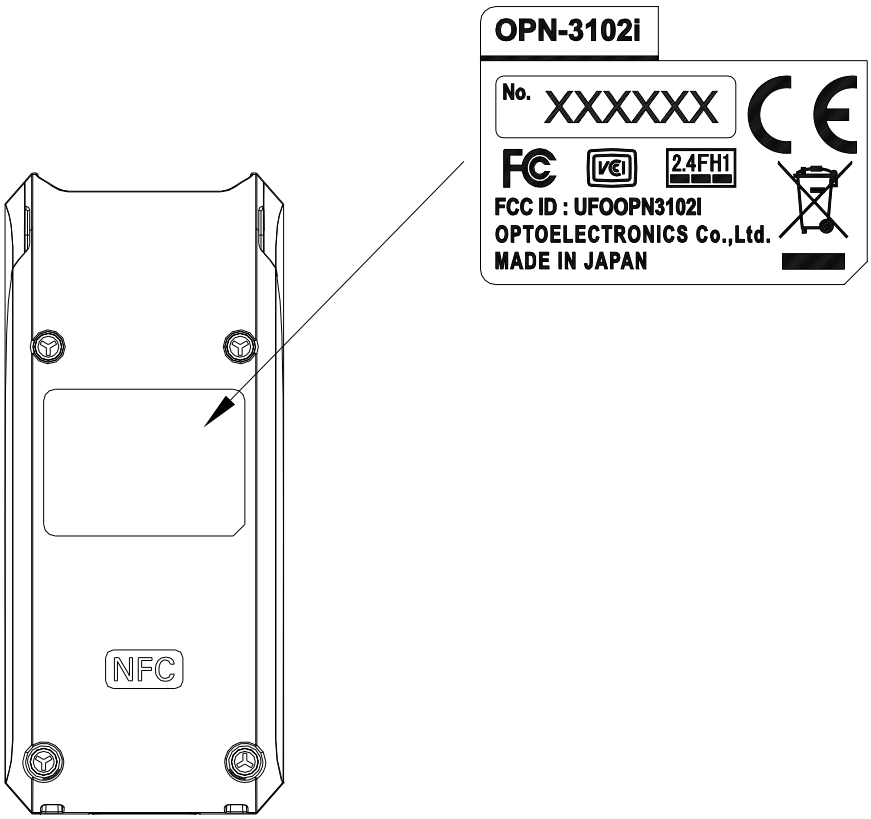

Unit: mm

Figure 12: Product Label Position

15 Packaging Specifications

15.1 Individual Packaging

Assembled package size: 125 × 112 × 40 (WDH mm)
Weight: Approx. kg

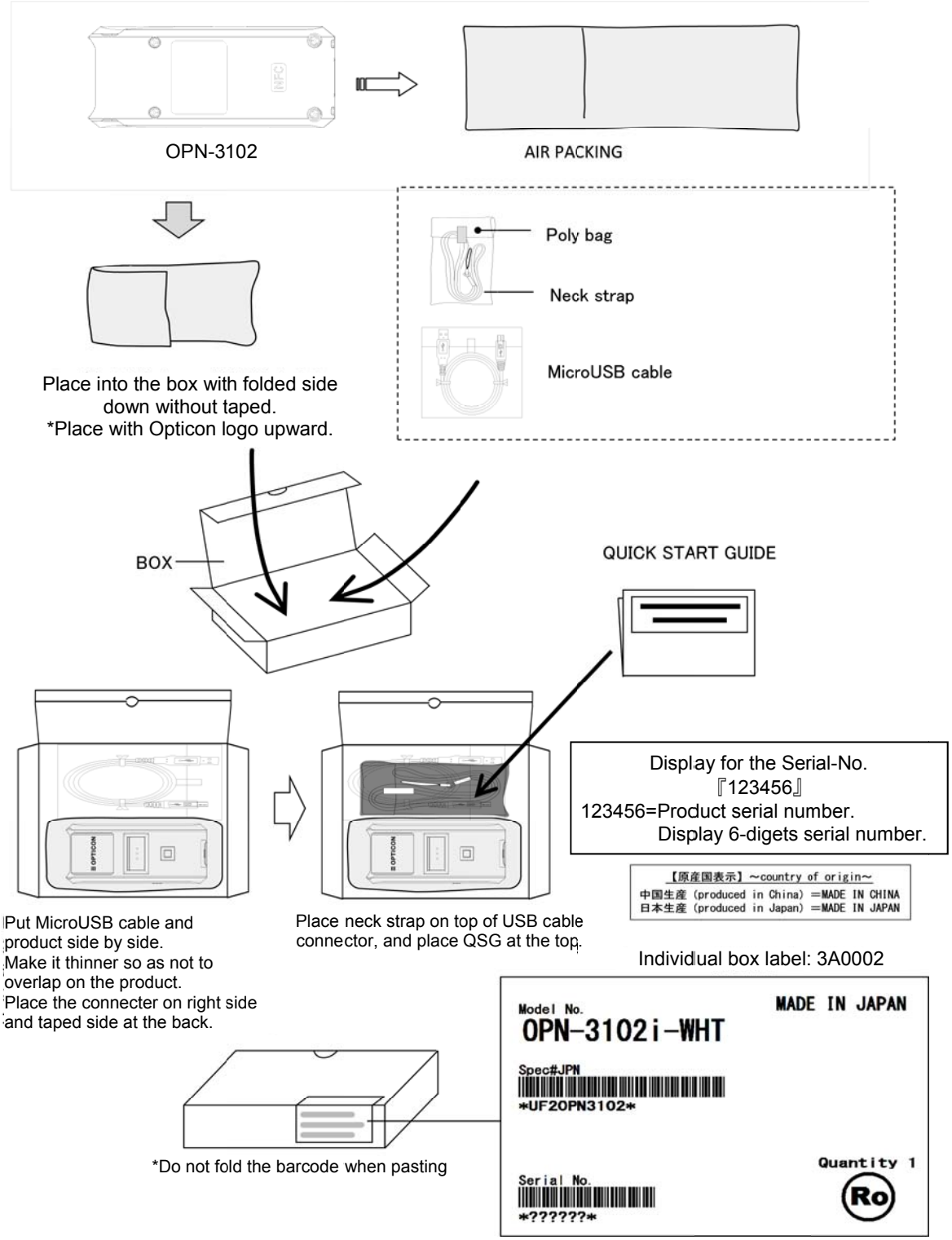

Figure 13: Individual Packaging

15.2 Collective Packaging

100pcs per box
Assembled package size : 595 × 520 × 245 (WDH mm)
Weight: Approx. kg

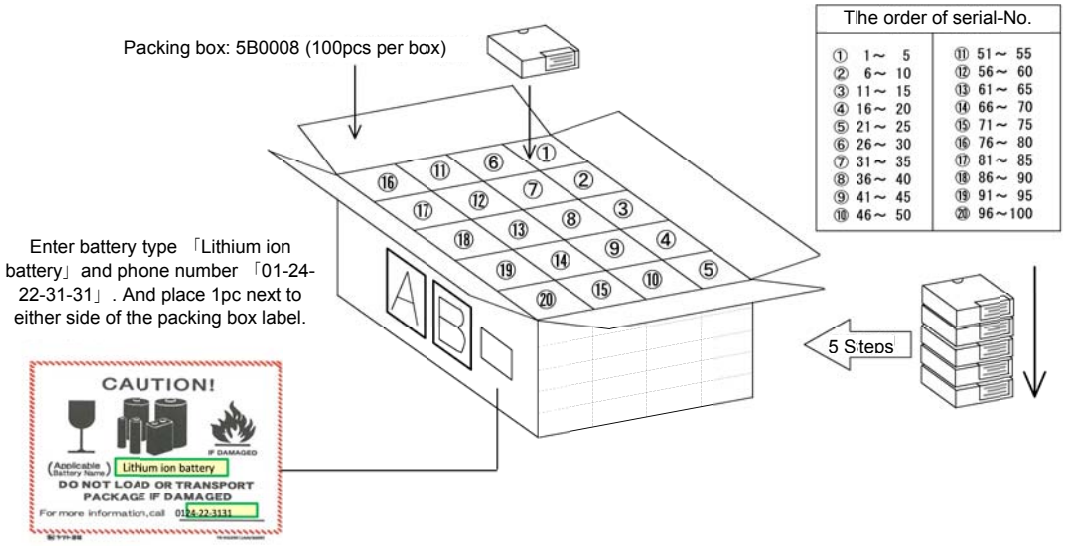

A: Barcode Serial Label for Packing Box
Stick the labels on both front and back side of the box

B: Missing Serial Number Label:
Attach this label when there are more than 3 labels of which serial number s are out of order (not in a correct sequence).

(3C0006)

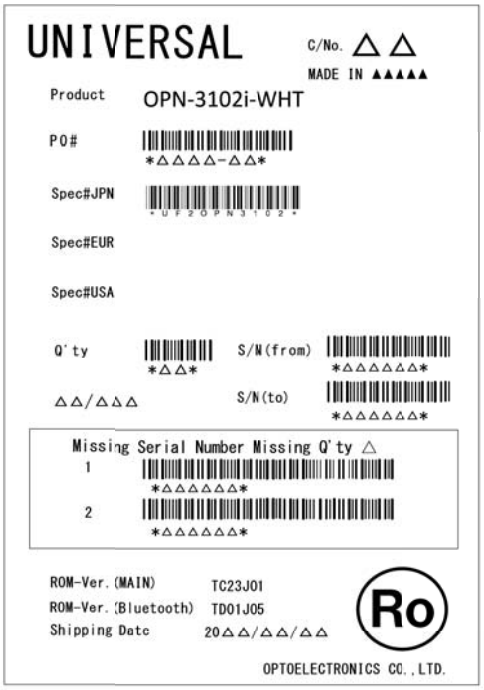

(3C0007)

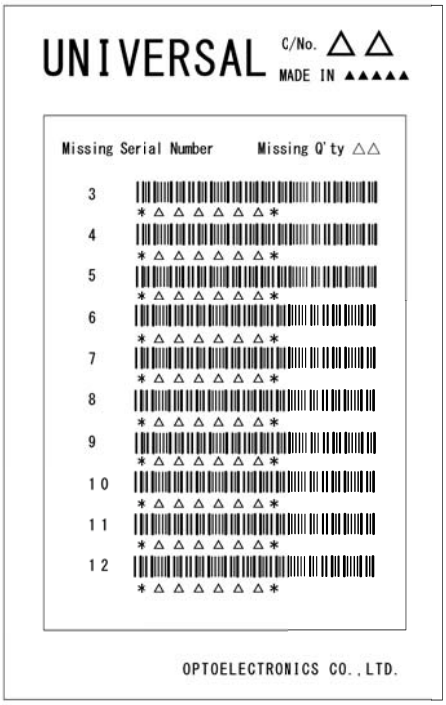

【原産国表示】～country of origin～
中国生産 (produced in China) =MADE IN CHINA 日本生産 (produced in Japan) =MADE IN JAPAN

Note: 'Ro mark' on the trays and the boxes for the product indicates that the product is RoHS compliant which is declared by Optoelectronics Co., Ltd.

Figure 14: Collective Packaging

16 Physical Features

16.1 Dimensions

83.0 × 36.0 × 21.5 (DWH mm)

16.2 Weight

Approx. 60 g (excluding accessories)

16.3 Mechanical Drawing

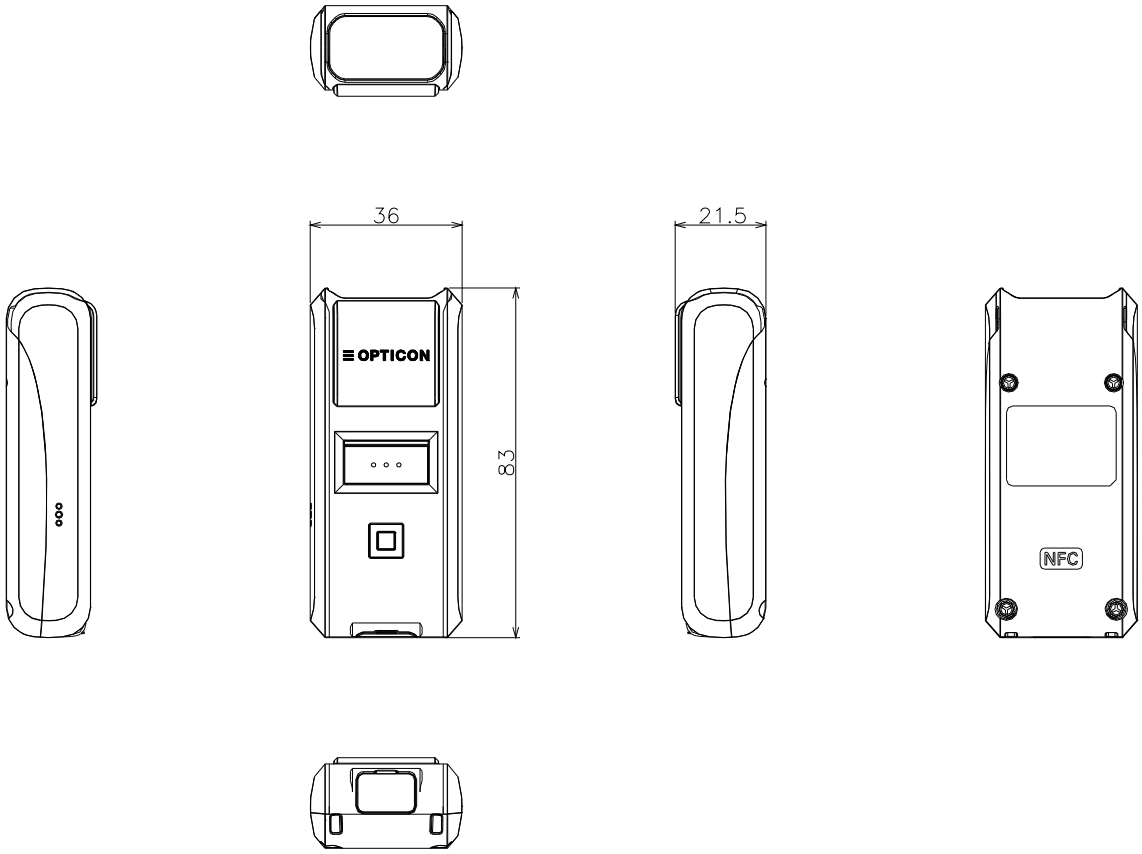

Unit: mm

Figure 15: Mechanical Drawing

17 Supported Symbologies

17.1 Default Setting

The scanner is set to default by reading the following menu label.
Recorded contents of the NFC tag will also return to default.

Default
@MENU_OPTO@ZZ@SO@ZZ@OTPO_UNEM@

17.2 Supported Symbologies

17.2.1 1D Barcodes

Code type	Default	Minimum length	Remarks
UPC	○	-	
UPC Add-on 2 UPC Add-on 5			
EAN(JAN)	○	-	
EAN Add-on 2 EAN Add-on 5			
EAN-13	○		
EAN-13 Add-on 2 EAN-13 Add-on 5			
EAN-8	○		
EAN-8 Add-on 2 EAN-8 Add-on 5			
Code 39	○	1	Not transmit ST/SP
Tri-Optic	○	-	Not transmit ST/SP
Codabar (NW7)	○	1	Not transmit ST/SP
Industrial 2of 5	○	5	
Interleaved 2of 5	○	6	
S-Code		5	
Code 128	○	1	GS1 conversion (setting required)
Code 93	○	1	
IATA	○	5	
MSI/Plessey		3	
UK/Plessey		2	
Telepen		1	
Code 11		1	
Matrix 2 of 5		5	
Chinese Post Matrix 2 of 5		-	
Korean Postal Authority		-	
Intelligent Mail Barcode		-	
POSTNET		-	
JPN (Customer Barcode)		-	

17.2.2 GS1 Databar, Composite Code

Code type	Default	Remarks
GS1 DataBar ・GS1 DataBar Omnidirectional ・GS1 DataBar Truncated ・GS1 DataBar Stacked ・GS1 DataBar Stacked Omnidirectional	○	GS1 conversion (setting required)
GS1 DataBar Limited	○	
GS1 DataBar Expanded ・GS1 DataBar Expanded ・GS1 DataBar Expanded Stacked	○	
Composite GS1-DataBar ・CC-A ・CC-B ・Limited CC-A ・Limited CC-B ・Expanded CC-A ・Expanded CC-B		GS1 conversion (setting required)
Composite GS1-128 ・CC-A ・CC-B ・CC-C		GS1 conversion (setting required)
Composite EAN ・EAN-13 CC-A ・EAN-13 CC-B ・EAN-8 CC-A ・EAN-8 CC-B		GS1 conversion (setting required)
Composite UPC ・UPC-A CC-A ・UPC-A CC-B ・UPC-E CC-A ・UPC-E CC-B		GS1 conversion (setting required)

17.2.3 2D Codes

Code type	Default	Remarks
PDF417	○	
Micro PDF417		
Codablock F		
QR Code	○	GS1 conversion (setting required)
Micro QR	○	
Data Matrix (ECC 200)	○	GS1 conversion (setting required)
Data Matrix (ECC 000-140)		
Aztec Code	○	
Aztec Runes		
Chinese-sensible code		
Maxi Code		