CERTIFICATE OF COMPLIANCE

NOT TRANSFERABLE

CERTIFICATE OF COMPLIANCE is hereby issued to the named Applicant, and is VALID ONLY for the equipment identified hereon for use under the Rules and Regulations listed below:

Applicant's Name: AHA I&C Co., LTD.

Applicant's Address: 918-38, Whagok1-dong, Kangseo-gu, Seoul-city, Korea

Manufacturer's Name: AHA I&C Co., LTD.

Manufacturer's Address: Same As Above

Product Description: LCD Tablet Monitor(17inch)

Model Number: AHALTM-171

Year of Manufacture: Prototype

Applicable Regulation: Part 15.107(b): Conducted Emission
Part 15.109(b): Radiated Emission

In the undersigned, hereby declare that the equipment specified above conforms to the above FCC Rule(s) and Regulation(s) Part 15 Subpart B as described in the attached test report.

TESTED and CERTIFIED by:

Korea Standard Quality Laboratories

KSQ Bldg., #23-123,
Daebang-dong, Dongjak-gu,
Seoul 156-807,
KOREA
Tel: +822-824-4600 Fax: +822-824-5642

Date: July 03. 2006

Report Number KSQ-FCC060703

Authorized Signature:

S. G., Kim / President

EMI TEST REPORT
FCC PART 15 CLASS B

for

AHA I&C Co., LTD.

918-38, Whagok1-dong, Kangseo-gu, Seoul-city, Korea

on the

LCD Tablet Monitor(17inch)
Model No.: AHALTM-171

Issued Date : July 03, 2006
Report Number : KSQ-FCC060703

Prepared By:

Test Date: July 03, 2006

Test Engineer: J. M. Kim
Printed Name Signature

Compliance Engineer: S. J. Lee
Printed Name Signature

Korea Standard Quality Laboratories
Testing Laboratories for EMC and Safety Compliance
www.ksqlab.com #102, Jangduk-Dong, Hwasung-Shi, Kyunggi-Do, KOREA

This report may not be reproduced without the full written consent of Korea Standard Quality Laboratories.

1. General Information

1.1 Introduction

The EMI Test Report of Information Technology Equipment is prepared on behalf of named applicant in accordance with the ANSI C63.4-2003. The test results reported in this document relate only to the item that was tested.

The detailed description of the measurement facility was found to be in compliance with the requirement of Section 2.948 of the FCC Rules. The Federal Communications Commission has the reports on file and is listed under Registration Number 100384. The scope of the accreditation covers the FCC Method - 47 CFR Part 15 or 18 of the Commission's Rules.

All measurements contained in this report were conducted in accordance with ANSI C63.4-2003. The instrumentation utilized for the measurements conforms with CISPR16 Specification for Radio Disturbance and Immunity Measuring Apparatus and Methods. Some accessories are used to increase sensitivity and prevent overloading of the measuring instrument. Calibration checks are performed yearly on the instruments by a local calibration laboratories.

All radiated and conducted emission measurements are performed manually at Korea Standard Quality Laboratories (hereinafter referred to as "KSQLab"), #102, Jangduk-Dong, Hwasung-Shi, Kyunggi-Do, KOREA. The radiated emission measurements required by the FCC Rules were performed on 3 meter or 10 meter, Open Area Test Site, test range maintained by KSQLab. Complete ANSI 63.4-2003 description and site attenuation measurement data records are maintained at the test facility and have been placed on file with the Federal Communications Commission. The power line conducted emission measurements were performed in a shielded enclosure also located at the same facility. The KSQLab EMC test facility in Hwasung-Shi are designated testing laboratory according to ISO/IEC 17025 by Radio Research Laboratory (RRL), Ministry of Information and Communication.

1.2 Product Description for Equipment Under Test (EUT)

AHA I&C Co., LTD.'s LCD Tablet Monitor, Model No: AHALTM-171, or the "EUT" as referred to in this report is a LCD Tablet Monitor for PC.

- LCD Panel Type : LCD Tablet Monitor(Size : 17.0″)
- Resolution : 1280 x 1024(Recommended Resolution)
- Display area : 337.9(H) x 270.3(V) mm
- Special Features : Pen-input Screen
- Power : DC12V, 3.33A from AC/DC Adapter
- Size of Monitor(W x D x H) : 383 x 376 x 159 mm
- Pixel pitch : 0.264(H) x 0.264(V)
- Display colors : 16.2M(true)
- Display Screen : Anti-scratch Protective Glasses

1.3 Equipment Under Test

Description	Model Number	Serial Number	Manufacturer	Remarks
LCD Tablet Monitor	AHALTM-171	none	AHA I&C Co., LTD.	EUT
POWER SUPPLY	DSA-0421S-12 1	-	Dee Van Electronics Co., Ltd	AC/DC Adapter

1.4 Host System Configuration

Description	Model Number	Serial Number	Manufacturer	Remarks
Host Computer	JT4811	-	JOOYON TECH Co., Ltd.	ATX
Keyboard	SEM-DT35	22022689	Samsung Electro-Mecha	PS/2
Mouse	SWOP-35	-	DYATRON	PS/2

1.5 External I/O Cabling

Description	Length (m)	Port/From	Port/To	Remarks
RGB Cable	1.5	Dsub/Host	EUT	Shielded
Keyboard Cable	2.0	PS2/Host	Keyboard	Shielded
Mouse Cable	2.0	PS2/Host	Mouse	Shielded
DVI Cable	1.5	Dsub/Host	EUT	Shielded

1.6 Special Accessories

As shown in section 1.8, all interface cables used for compliance testing are shielded as normally supplied or by use respective component manufacturers.

1.7 EUT Modifications

No modifications were made to the EUT in order to achieve and maintain compliance to the standards described in this report.

1.8 Configuration of Test System

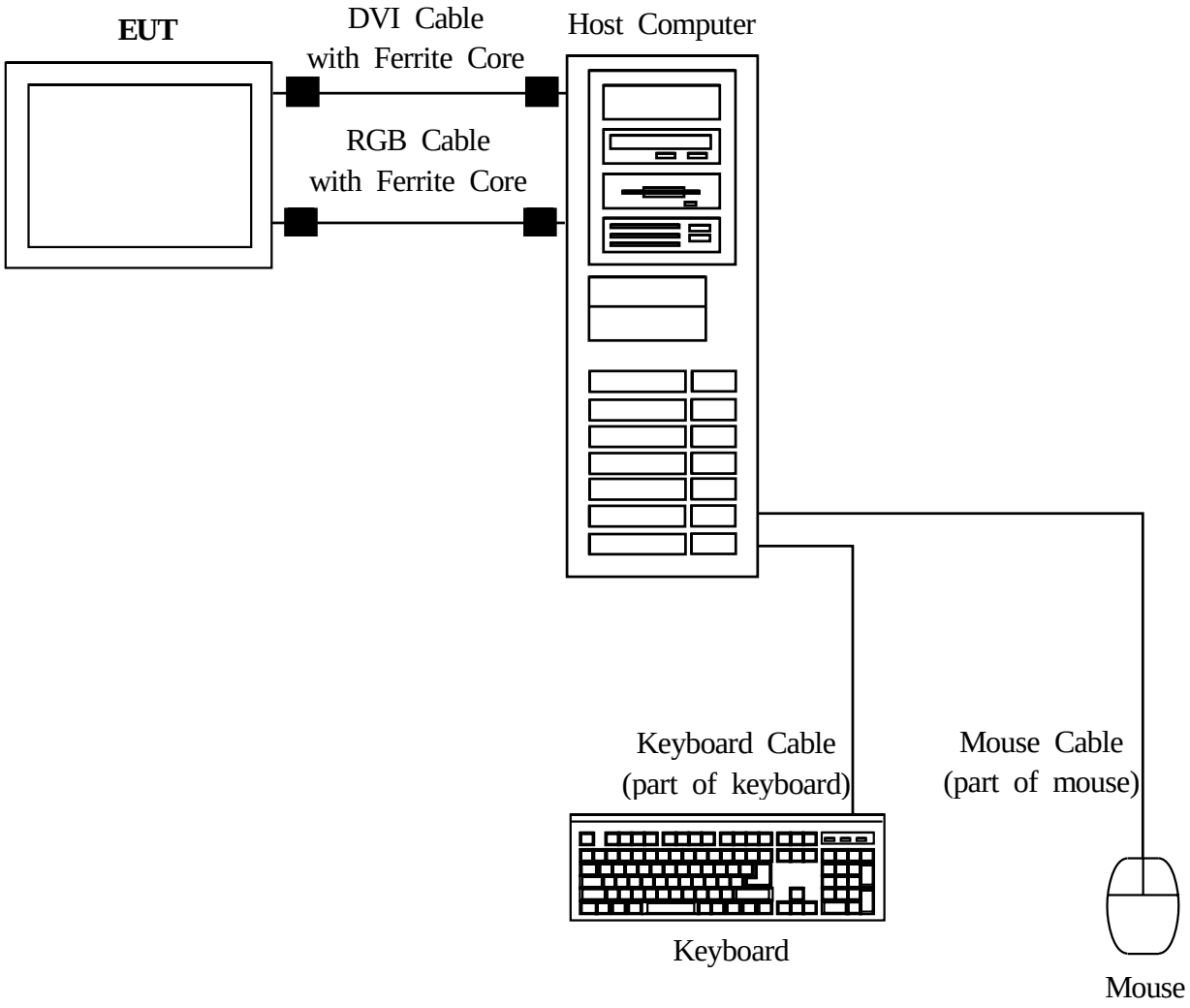

2. Test Performed

2.1 Conducted Emission Measurements

2.1.1 Test Description

The power line conducted emission measurements were performed in a shielded enclosure, using the setup in accordance with ANSI C63.4-2003 conducted emission measurement procedure.

2.1.2 Test Equipments

Description	Manufacturer	Model Number	Serial Number	Cal. Due
Spectrum Analyzer	Advantest	R3132	111100392	07, 2007
LISN1	Electro Metrics	ANS-25/2	2535	09, 2006
LISN2	Kyoritsu	KNW-407	8-1010-14	09, 2006
Plotter	Hewlett Packard	7550B	3050A14513	n/a

2.1.3 Test Environments

Ambient Temperatures	Relative Humidity
15~35 °C	30~60 %

2.1.4 Test Limits

Frequency (MHz)	CISPR22 Limits			
	Class B (dBuV)		Class A (dBuV)	
	Quasi-peak	Average	Quasi-peak	Average
0.15 to 0.50	66.0 to 56.0	56.0 to 46.0	79.0	66.0
0.50 to 5.00	56.0	46.0	73.0	60.0
5.00 to 30.00	60.0	50.0	73.0	60.0

2.1.5 Test Procedure

Conducted emission levels were measured on each current-carrying line with the spectrum analyzer operating in the CISPR quasi-peak mode (or peak mode if applicable). The analyzer's 6dB bandwidth was set to 9kHz. The initial step in collecting conducted data is a spectrum analyzer peak scan of the measurement range. If the conducted emission exceed the average limit with the instrument set to the quasi-peak mode, the measurements are made in the average mode. The emission spectrum was scanned from 150kHz to 30MHz. The highest emission amplitudes relative to the appropriate limits were measured and have been recorded. Quasi-peak readings are distinguished with a "QP". The conducted emission test was performed with the EUT exercise program loaded, and the emissions were scanned between 150kHz to 30MHz on the HOT side and NEUTRAL side, herein referred to as H and N, respectively.

2.1.6 Test Configuration

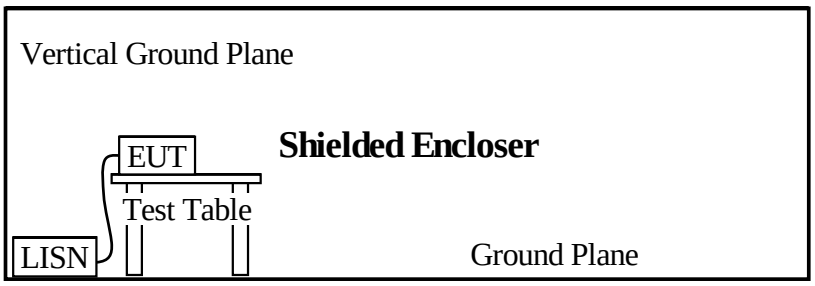

2.1.7 Test Results

According to the data in section 2.1.9, the EUT complied with the CISPR22 limits, and had the worst margin reading of:

- 13.7dB at 22.00MHz in the HOT side.

2.1.8 Test Data

Line Conducted Emission				CISPR22 Class B		
Frequency (MHz)	Amplitude (dBuV)	Phase Hot/Neutral	Detector QP/AV/PK	Applicable Limit QP (dBuV)	Applicable Limit AV (dBuV)	Margin (dB)
0.17	34.1	H	PK	65.5	55.5	-31.4
0.18	48.6	N	PK	63.2	53.2	-14.6
0.25	35.5	H	PK	62.1	52.1	-26.6
0.35	39.9	H	PK	60.0	50.0	-20.1
0.41	41.3	H	PK	59.5	49.5	-18.2
0.48	43.3	H	PK	57.6	47.6	-14.3
0.58	40.2	H	PK	56.0	46.0	-15.8
0.70	29.8	H	PK	56.0	46.0	-26.2
1.52	31.8	H	PK	56.0	46.0	-24.2
2.20	41.4	N	PK	56.0	46.0	-14.6
3.05	31.7	H	PK	56.0	46.0	-24.3
3.60	32.1	H	PK	56.0	46.0	-23.9
7.00	37.5	H	PK	60.0	50.0	-22.5
8.25	40.8	H	PK	60.0	50.0	-19.2
9.18	41.7	H	PK	60.0	50.0	-18.3
10.54	23.9	N	PK	60.0	50.0	-36.1
17.80	28.7	N	PK	60.0	50.0	-31.3
22.00	46.3	H	PK	60.0	50.0	-13.7

Temperature: 27 °C Humidity: 58 % Test Date: July 03, 2006 Tested by: J. M. Kim

2.1.9 Plots of Test Data

Polarization: HOT (LIVE)

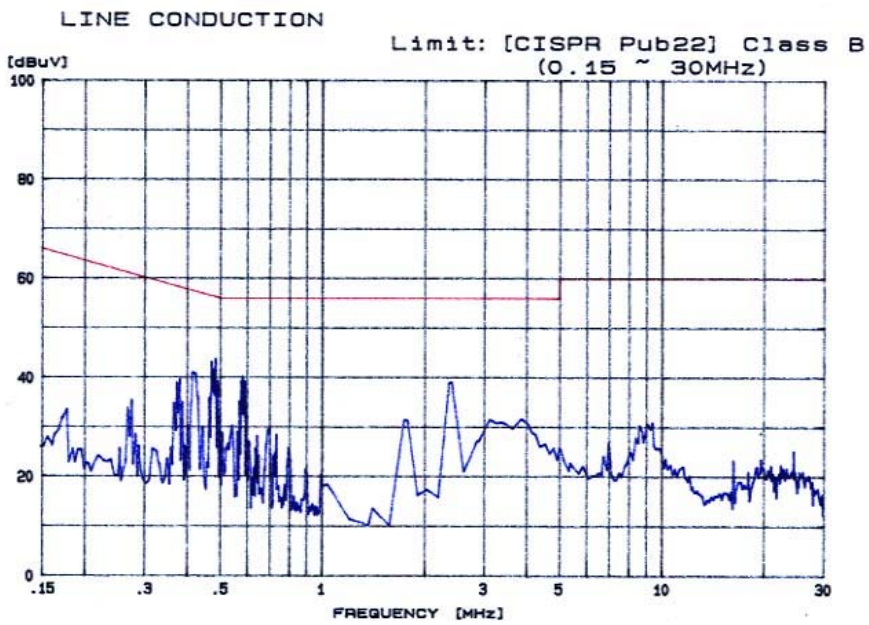

Polarization: NEUTRAL

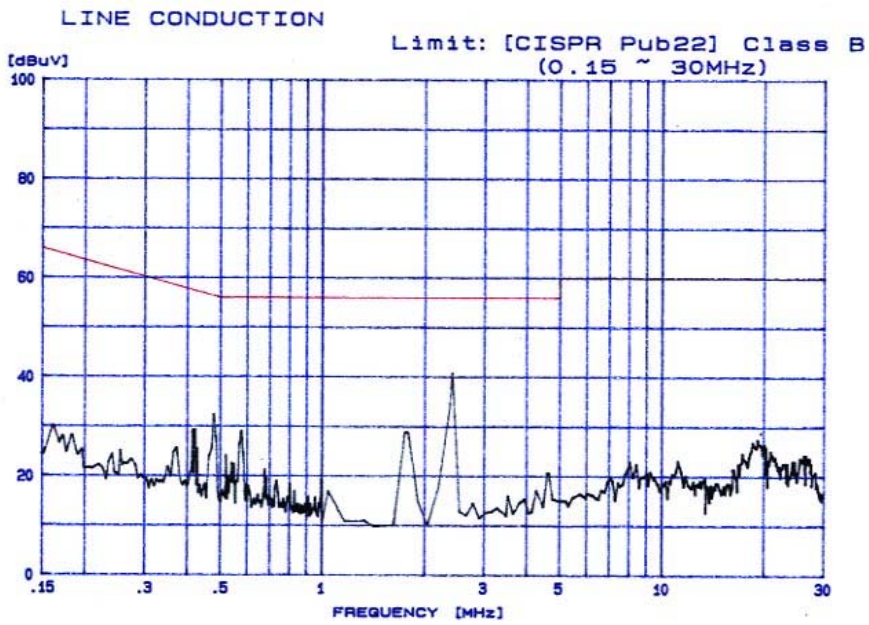

2.2 Radiated Emission Measurements

2.2.1 Test Description

The radiated emission measurements were performed in a Open Area Test Site (OATS), using the setup in accordance with ANSI C63.4-2003 radiated emission measurement procedure.

2.2.2 Test Equipments

Description	Manufacturer	Model Number	Serial Number	Cal. Due
Spectrum Analyzer	Hewlett Packard	8568B	3217A05629	09, 2006
Spectrum Display	Hewlett Packard	85682A	3144A20886	09, 2006
RF Preselector	Hewlett Packard	85685A	3221A01366	09, 2006
Quasi-Peak Adapter	Hewlett Packard	85650A	3145A01652	09, 2006
Biconical Antenna	Electro Metrics	BIA-30S	164	03, 2007
Log Periodic Antenna	Electro Metrics	LPA-30	387	03, 2007
Turn Table	KSQ	KSQ-T10	KSQ98121	n/a
Antenna Mast	KSQ	KSQ-A10	KSQ98122	n/a

2.2.3 Test Environments

Ambient Temperatures	Relative Humidity
15~35 °C	30~60 %

2.2.4 Test Limits

Frequency (MHz)	FCC Part 15 Limits			
	Class B @3m		Class A @10m	
	(dBuV/m)	(uV/m)	(dBuV/m)	(uV/m)
30 to 88	40.0	100	39.5	90
88 to 216	43.5	150	43.5	150
216 to 960	46.0	200	46.5	210
above 960	54.0	500	49.5	300

2.2.5 Test Procedure

Before final measurements of radiated emission were made on the OATS, the EUT was scanned in semi-anechoic chamber in order to determine its emission spectrum signature. The physical arrangement of the test system and associated cabling was varied in order to determine the effect on the EUT's emission in amplitude, direction and frequency. This process was repeated during final radiated emission measurements on the OATS range, at each frequency, in order to ensure that maximum emissions amplitudes were attained.

The radiated emission test was performed with EUT exercise program loaded, and the emissions were scanned between 30MHz to 1000MHz using a HP 8568B spectrum analyzer. The spectrum analyzer's 6dB bandwidth was set to 120kHz, and the analyzer was operated in the CISPR quasi-peak detection mode.

At each frequency, the EUT was rotated 360 degrees, and the antenna was raised and lowered from 1 to 4 meters in order to determine the maximum emission levels. Measurements were taken using both HORIZONTAL and VERTICAL antenna polarization, herein referred to as H and V, respectively.

2.2.6 Field Strength Calculation

The Field Strength (FS) is calculated by adding the Antenna Factor (AF) and Cable Factor (CF) from the Measured Reading (MR). The basic equation with a sample calculation is as follows:

FS(dBuV/m) = MR(dBuV) + [AF(dB/m) + CF(dB)]

2.2.7 Test Configuration

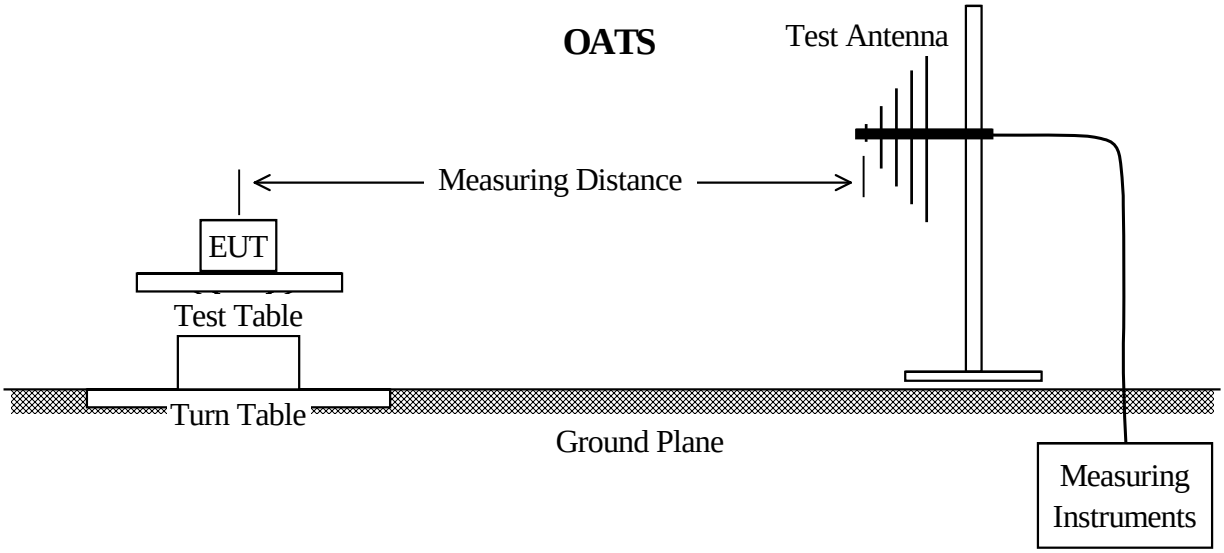

2.2.8 Test Results

According to the data in section 2.2.10, the EUT complied with the FCC Part 15 standards, and had the worst margin reading of:

-15.3dB at 86.45MHz in the VERTICAL antenna polarization.

2.2.9 Test Data

Indicated		Antenna		Correction Factor		Corrected Amplitude	FCC Part15 Class B		
Frequency (MHz)	Amplitude (dBuV/m)	Polar. (H/V)	Height (m)	Ant. (dB)	Cable (dB)	(dBuV/m)	Applicable Limit (dBuV/m)	Applicable Limit (uV/m)	Margin (dB)
35.82	14.6	H	1.5	6.3	0.9	21.8	40.0	100	-18.2
42.13	11.7	V	1.3	8.0	1.1	20.8	40.0	100	-19.2
57.62	12.5	V	1.9	9.3	1.3	23.1	40.0	100	-16.9
61.88	11.6	V	2.5	9.3	1.4	22.3	40.0	100	-17.7
65.92	14.8	H	2.3	9.0	1.4	25.2	40.0	100	-14.8
86.45	16.5	V	3.2	6.6	1.6	24.7	40.0	100	-15.3
99.85	11.2	H	1.4	7.3	1.6	20.1	43.5	150	-23.4
125.13	13.4	H	1.3	6.9	1.9	22.2	43.5	150	-21.3
148.97	10.0	V	1.8	8.3	2.2	20.5	43.5	150	-23.0
168.72	8.6	V	2.1	8.7	2.3	19.6	43.5	150	-23.9
188.16	6.9	H	2.6	8.6	2.4	17.9	43.5	150	-25.6
211.34	11.9	H	2.8	9.9	2.7	24.5	43.5	150	-19.0
241.52	10.3	H	3.4	11.2	2.9	23.4	46.0	200	-22.6
325.94	5.2	V	2.5	13.2	3.5	21.9	46.0	200	-24.1
367.62	4.8	H	3.5	14.7	3.7	23.2	46.0	200	-22.8
455.82	4.2	V	1.5	16.9	4.3	25.4	46.0	200	-20.6
521.87	4.4	H	1.6	18.1	4.7	27.2	46.0	200	-18.8
584.82	4.3	V	3.0	18.9	5.1	28.3	46.0	200	-17.7
-	-	-	-	-	-	-	54.0	500	-

Temperature: 27 °C Humidity: 58 % Test Date: July 03, 2006 Tested by: J. M. Kim