KitchenAid®

MICROWAVE OVEN

Use & Care Guide

For questions about features, operations/performance, parts, accessories, or service, call: **1-800-422-1230** or visit our website at **www.kitchenaid.com/owners.**

In Canada, call: **1-800-807-6777** or visit our website at **www.kitchenaid.ca/owners**.

HORNO MICROONDAS

Manual de uso y cuidado

Si tiene preguntas sobre funciones, funcionamiento, rendimiento, piezas, accesorios o servicio técnico, llame al: **1-800-422-1230** o visite nuestro sitio web en **www.kitchenaid.com/owners.**

En Canadá, llame al: **1-800-807-6777** o visite nuestro sitio web en **www.kitchenaid.ca/owners**.

W11814046

Models / Modelos
KMCS2020TBL*, KMCS2020TWH*, KMCS2020TPS*

TABLE OF CONTENTS

MICROWAVE OVEN SAFETY **3**
PRECAUTIONS TO AVOID POSSIBLE EXPOSURE TO EXCESSIVE MICROWAVE ENERGY **4**
INSTALLATION INSTRUCTIONS **5**
Unpacking 5
Location Requirements 5
Electrical Requirements 5
PARTS AND FEATURES **6**
Turntable 6
MICROWAVE OVEN CONTROL **7**
Display 7
Standby mode 7
START 7
Quick Start/Add 30 second 7
STOP/UNLOCK 7
Clock 8
Mute On/Off 8
Express Start 8
Timer 8
Cooking End 8
Keypad Instructions 9
MICROWAVE OVEN USE **13**
Food Characteristics 13
Cooking Guidelines 13
Cookware and Dinnerware 14
Aluminum Foil and Metal 14
Cooking Menu 14
Popcorn 15
Reheat 15
Soften 15
Melt 15
Keep Warm 15
Auto Defrost 16
MICROWAVE OVEN CARE **17**
General Cleaning 17
TROUBLESHOOTING **18**
ASSISTANCE OR SERVICE **19**
In the U.S.A. 19
In Canada 19
Replacement Parts 19

MICROWAVE OVEN SAFETY

Your safety and the safety of others are very important.

We have provided many important safety messages in this manual and on your appliance. Always read and obey all safety messages.

This is the safety alert symbol.

This symbol alerts you to potential hazards that can kill or hurt you and others.

All safety messages will follow the safety alert symbol and either the word “DANGER” or “WARNING.” These words mean:

⚠ DANGER — **You can be killed or seriously injured if you don't immediately follow instructions.**

⚠ WARNING — **You can be killed or seriously injured if you don't follow instructions.**

All safety messages will tell you what the potential hazard is, tell you how to reduce the chance of injury, and tell you what can happen if the instructions are not followed.

IMPORTANT SAFETY INSTRUCTIONS

When using electrical appliances basic safety precautions should be followed, including the following:

WARNING: To reduce the risk of burns, electric shock, fire, injury to persons, or exposure to excessive microwave energy:

- Read all instructions before using the microwave oven.
- Read and follow the specific “PRECAUTIONS TO AVOID POSSIBLE EXPOSURE TO EXCESSIVE MICROWAVE ENERGY” found in Page 4.
- The microwave oven must be grounded. Connect only to properly grounded outlet. See “GROUNDING INSTRUCTIONS” found in the “INSTALLATION INSTRUCTIONS” section.
- Install or locate the microwave oven only in accordance with the provided Installation Instructions.
- Some products such as whole eggs in the shell and sealed containers - for example, closed glass jars - are able to explode and should not be heated in the microwave oven.
- Use the microwave oven only for its intended use as described in the manual. Do not use corrosive chemicals or vapors in the microwave oven. This type of oven is specifically designed to heat, cook, or dry food. It is not designed for industrial or laboratory use.
- HOT CONTENTS CAN CAUSE SEVERE BURNS. DO NOT ALLOW CHILDREN TO USE THE MICROWAVE. Use caution when removing hot items.
- Do not operate the microwave oven if it has a damaged cord or plug, if it is not working properly, or if it has been damaged or dropped.
- The microwave oven should be serviced only by qualified service personnel. Call an authorized service company for examination, repair, or adjustment.
- Do not cover or block any openings on the microwave oven.
- Do not store this microwave oven outdoors. Do not use the microwave oven near water - for example, near a kitchen sink, in a wet basement, near a swimming pool, or similar locations.
- Do not immerse cord or plug in water.
- Keep cord away from heated surfaces.
- Do not let cord hang over edge of table or counter.
- See door surface cleaning instructions in the “Microwave Oven Care” section.
- To reduce the risk of fire in the oven cavity:
  - Do not overcook food. Carefully attend the microwave oven when paper, plastic, or other combustible materials are placed inside the oven to facilitate cooking.
  - Remove wire twist-ties from paper or plastic bags before placing bags in oven.
  - If materials inside the oven ignite, keep oven door closed, turn oven off, and disconnect the power cord, or shut off power at the fuse or circuit breaker panel.
  - Do not use the cavity for storage purposes. Do not leave paper products, cooking utensils, or food in the cavity when not in use.

SAVE THESE INSTRUCTIONS

IMPORTANT SAFETY INSTRUCTIONS

- Oversized food or oversized metal utensils should not be inserted in a microwave/ toaster oven as they may create a fire or risk of electric shock.
- Do not clean with metal scouring pads.Pieces can burn off the pad and touch electrical parts involving a risk of electric shock.
- Do not use paper products when appliance is operated in the toaster mode.
- Do not store any materials, other than manufacturer's recommended accessories, in this oven when not in use.
- Do not cover racks or any other part of the oven with metal foil. This will cause overheating of the oven.
- Liquids, such as water, coffee, or tea are able to be overheated beyond the boiling point without appearing to be boiling. Visible bubbling or boiling when the container is removed from the microwave oven is not always present.

THIS COULD RESULT IN VERY HOT LIQUIDS SUDDENLY BOILING OVER WHEN THE CONTAINER IS DISTURBED OR A SPOON OR OTHER UTENSIL IS INSERTED INTO THE LIQUID.

To reduce the risk of injury to persons:

– Do not overheat the liquid.

– Stir the liquid both before and halfway through heating it.

– Do not use straight-sided containers with narrow necks.

– After heating, allow the container to stand in the microwave oven for a short time before removing the container.

– Use extreme care when inserting a spoon or other utensil into the container.

SAVE THESE INSTRUCTIONS

PRECAUTIONS TO AVOID POSSIBLE EXPOSURE TO EXCESSIVE MICROWAVE ENERGY

(a) Do not attempt to operate this oven with the door open since open-door operation can result in harmful exposure to microwave energy. It is important not to defeat or tamper with the safety interlocks.

(b) Do not place any object between the oven front face and the door or allow soil or cleaner residue to accumulate on sealing surfaces.

(c) Do not operate the oven if it is damaged. It is particularly important that the oven door close properly and that there is no damage to the:

(1) Door (bent),

(2) Hinges and latches (broken or loosened),

(3) Door seals and sealing surfaces.

(d) The oven should not be adjusted or repaired by anyone except properly qualified service personnel.

This device complies with Part 18 of the FCC Rules.
This device complies with Industry Canada ICES-001.

INSTALLATION INSTRUCTIONS

Unpacking

1. Empty the microwave oven of any packing materials.
2. Clean the inside with a soft, damp cloth.
3. Check for damage, such as:
   - a door that is not lined up correctly,
   - damage around the door, or
   - dents on the interior or exterior of the microwave oven.

   If there is any damage, do not operate the microwave oven until a designated service technician has checked it and made any needed repairs.

NOTE: To avoid damage to the microwave oven, **do not remove microwave inlet cover**. See the “Parts and Features” section.

Location Requirements

⚠WARNING

Excessive Weight Hazard

Use two or more people to move and install microwave oven.

Failure to do so can result in back or other injury.

IMPORTANT: The control side of the microwave oven is the heavy side. Handle the microwave oven gently. The weight of the microwave oven is over 35 lbs (15.9 kg).

- Place the microwave oven on a cart, counter, table, or shelf that is strong enough to hold the microwave oven and the food and utensils you place inside it.
- The microwave oven should be at a temperature above 50 °F (10 °C) for proper operation.

NOTE: Some models can be built into a wall or cabinet by using one of the trim kits listed in the “Assistance or Service” section.

- The microwave oven rear plate must be placed close to the wall. The installation height needs to be higher than 916 mm.
- Make sure the microwave oven legs are in place to ensure proper airflow. If vents are blocked, a sensitive thermal device may automatically turn the microwave oven off. The microwave oven should work properly once it has cooled.

Electrical Requirements

⚠WARNING

Electrical Shock Hazard

Plug into a grounded 3 prong outlet.

Do not remove ground prong.

Do not use an adapter.

Do not use an extension cord.

Failure to follow these instructions can result in death, fire, or electrical shock.

Observe all governing codes and ordinances.

Required:

- A 120 V, 60 Hz, AC only, 15 A or 20 A electrical supply with a fuse or circuit breaker.

Recommended:

- A time-delay fuse or time-delay circuit breaker.
- A separate circuit serving only this microwave oven.

GROUNDING INSTRUCTIONS

- **For all cord connected appliances:**
  The microwave oven must be grounded. In the event of an electrical short circuit, grounding reduces the risk of electric shock by providing an escape wire for the electric current. The microwave oven is equipped with a cord having a grounding wire with a grounding plug. The plug must be plugged into an outlet that is properly installed and grounded.

WARNING: Improper use of the grounding plug can result in a risk of electric shock. Consult a qualified electrician or serviceman if the grounding instructions are not completely understood, or if doubt exists as to whether the microwave oven is properly grounded.

Do not use an extension cord. If the power supply cord is too short, have a qualified electrician or serviceman install an outlet near the microwave oven. A short power supply cord is provided to reduce the risks resulting from becoming entangled in or tripping over a longer cord.

SAVE THESE INSTRUCTIONS

PARTS AND FEATURES

This manual may cover several different models. The model you have purchased may have some or all of the features shown here. The appearance of your particular model may differ slightly from the illustrations in this manual.

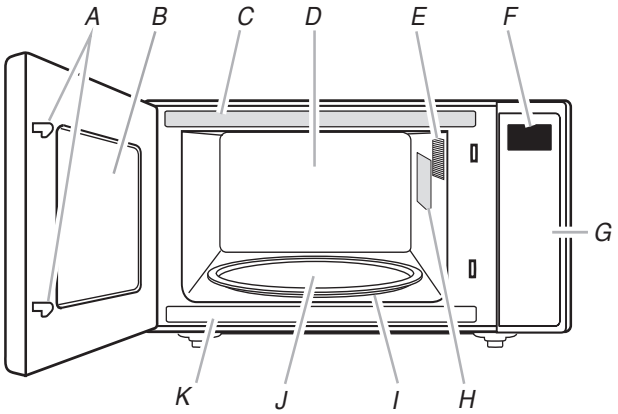

A. Door lock system
B. Window
C. Cooking guide label
D. Back panel
E. Microwave oven light
F. Display
G. Control panel
*H. Microwave inlet cover**
I. Removable turntable support
J. Glass turntable
K. Model and serial number plate
Parts and Features
Not Shown: Grill element (on cavity ceiling)

***NOTE:** To avoid damage to the microwave oven,do not removemicrowave inlet cover. See the “Parts and Features” section

Turntable

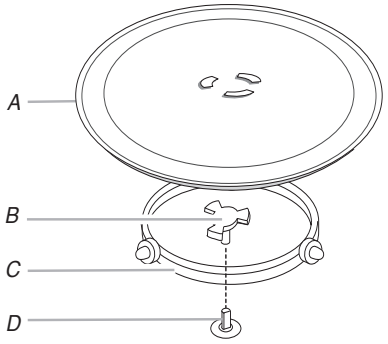

A.Turntable
B.Hub
C.Support
D.Shaft

The turntable can rotate in either direction to help cook food more evenly. For best cooking results, do not operate the microwave oven without having the turntable in place. See the “Assistance or Service” section to reorder any of the parts.

To Install:

1. Place the support on the microwave oven cavity bottom.
2. Place the turntable on the support.

   Fit the raised, curved wedges in the center of the turntable bottom between the three spokes of the hub. The rollers on the support should fit inside the turntable bottom ridge.

MICROWAVE OVEN CONTROL

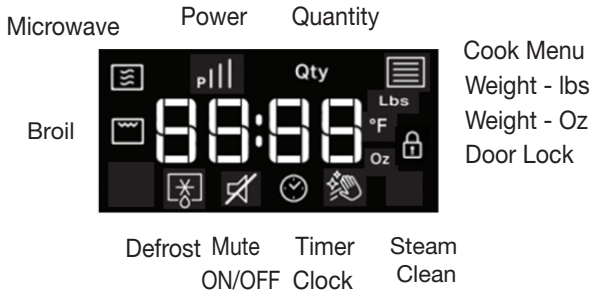

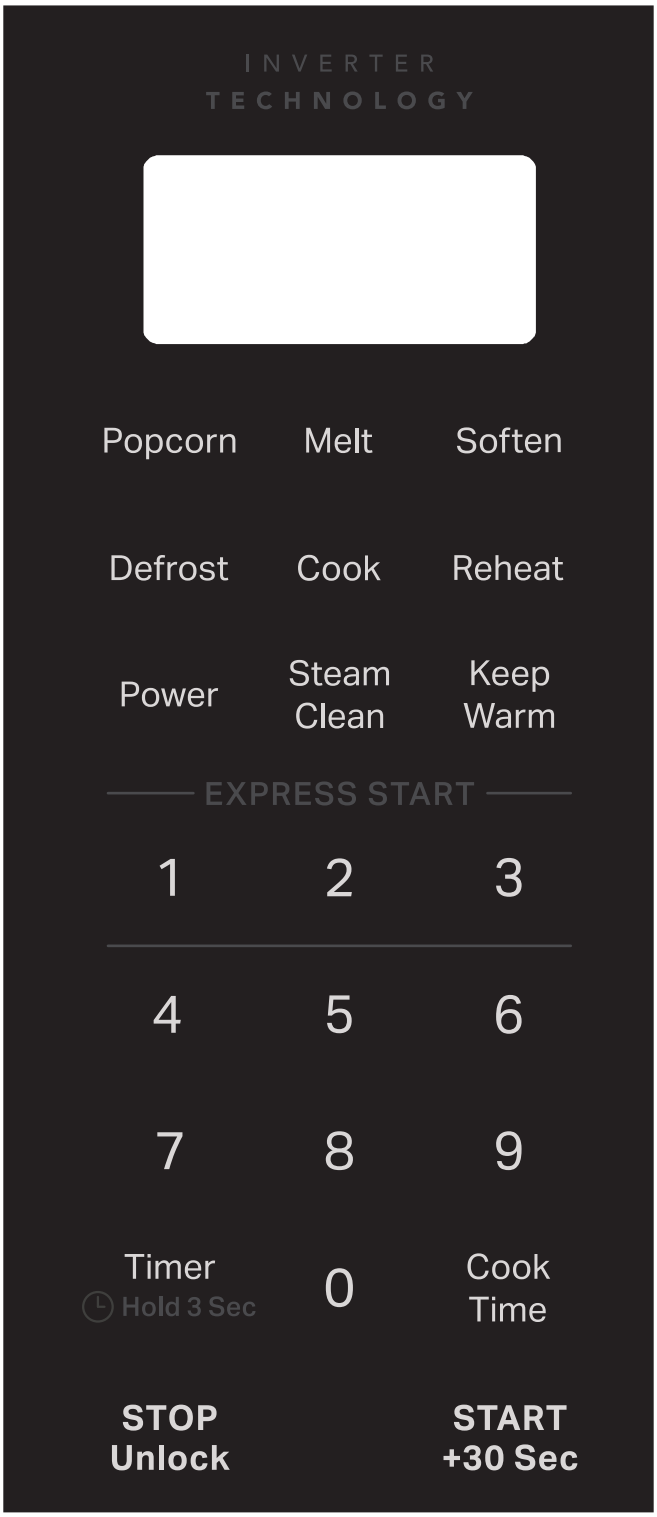

Display

When power is first supplied to the microwave oven, “12 Hr” will appear in the display. User can press Clock button to change 12 or 24 hour format.

Press START button to confirm. Then the screen shows “00:00”.

Standby mode

When no functions are being used, the microwave oven will switch to Standby mode.

After function selection, press the STOP/UNLOCK button to exit the function selection. If you again press the STOP/UNLOCK button it will be a invalid, as cooking mode is not activated.

When cooking mode is activated and the user presses the STOP/UNLOCK button, the STOP/UNLOCK functions will be triggered at the same time. Press the STOP/UNLOCK button again to cancel the function and return to Standby mode.

START

The START button begins any function. If non-sensor cooking is interrupted by opening the door, pressing START button will resume the cycle.

NOTE: To avoid unintentional operation of the microwave oven, a cooking function cannot be started if the microwave oven door has been closed for about 1 minute. The word “door” will appear in the display until the door is opened and closed.

Quick Start/Add 30 second

In standby mode, pressing START automatically starts the microwave oven at 100% power for 30 seconds and adds 30 seconds of cook time, with each additional touch of the control. Time may be added to any manual cooking cycle in 30 second increments, at the moment power level, by pressing START button during cooking.

NOTE:

- Quick Start 30 sec: Press “Start/+ 30 sec”, it will quick start of full power in 30 sec; press again if you need to add moretime mid cycle or at the end of the cycle.
- Quick Minute Cooking: You can also press keypad 1-3 button to have full power cooking of the selecting minutes.

STOP/UNLOCK

The STOP/UNLOCK button clears any incorrect command and cancels any program during cooking. Press the STOP/UNLOCK button to stop the cycle. It will not erase the time of day.

The microwave oven will also turn off when the door is opened. Close the door and press START to resume the cycle.

Clock

The microwave oven must be in standby.

1. Press Clock button to enter clock setting.
   It will also appear every time the product is plugged into the power source, or power is back after a fail.
2. Press the keypad 0-9 button to set the hour.
3. Press keypad 0-9 button to set the minute.
4. Press START or CLOCK button to confirm the setting.

Mute On/Off

This function allows the user to activate/deactivate all the sounds played by the appliances, includes button press, warnings, alarm, even end audio feedback.

Press Keep Warm button and hold for 3 seconds to put into mute, hold the button again for 3 seconds to turn on the sound.

Express Start

Press the keypad button 1 or 2 or 3, the microwave oven at 100% power for 1 min, 2 min, 3 min of cook time directly. No need press START button to confirm.

NOTE: The function can be active only in idle state. The Microwave oven will alert user with invalid input sound if press keys 4, 5, 6, 7, 8, 9, 0.

Timer

To Set:

1. Press Timer button
2. Press keypad 0- 9 button to enter desired time.
3. Press START button. When the set time ends, the end-of-timer.
4. When the Timer countdown is achieve in the display, tone will sound. Press STOP/UNLOCK to stop the timer.

NOTE: The Timer does not start or stop the microwave oven.T he function can be set only in Standby mode.

Cooking End

When the cooking is finished, the display will show the text “End”. A reminder acoustic beep will signal.

1. After the Cooking End, If you press the STOP/UNLOCK button, takes out the food and closes the door again, the interface will display the clock, it will switch to 1-step door opening.
2. If you will not remove the food within 30 minutes, it will consistently display “END” for 30 minutes, and automatically return to standby mode and unlock after 30 minutes and it will switch to 1-step door opening.
3. Lamp off , Fan work for 1 min and display will show "FAn ".

Keypad Instructions

Keypad	Feature	Instructions
Timer	Hold to Set the Timer	To set the timer, follow the instructions below: **1.** Press TIMER button. **2.** Press the keypad 0-9 button to select timer values. **3.** Press START button to confirm. **NOTE:** The microwave oven must be in idle state. The screen shows “30:00” as default value It is set in minutes from 00:01 to 60:00 min, press START to confirm.
Power	Set Cook Power	To set the cook power, follow the instructions below: **1.** In standy mode, Press Cook Time button. Default time is“00:00” **2.** Press number buttons to enter desired time, from 0:01 to 90:00. **3.** Press the Power button to confirm and display will show default Power Level “1 0 0”. **4.** Press number buttons to set the power levels **5.** Press START button and oven will work
Cook Time	Set Cook Time	To set the cook time, follow the instructions below: **1.** In standy mode, Press the Power button. Default Power Level is “1 0 0”. **2.** Press number buttons to set the power levels **3.** Press the Cook Time button to confirm and display will show “00:00” **4.** Press number buttons to set the desired time, from 0:01 to 90:00. **5.** Press START button and oven will work **NOTE:** While the Timer countdown is active in the display, touch STOP/UNLOCK to stop the Timer. The timer does not start or stop the microwave oven.
START (+ 30 Sec)	Add 30 Seconds	The button START can be used in two ways: **1.** To start the microwave by cooking for 30 seconds with FULL power in idle state. **2.** To increase a cooking time using increments of 30 seconds. Each press adds 30 seconds.
START (+ 30 Sec)	Start Function	Press the START button to start any cooking function. If cooking is interrupted by opening the door, touch the START button after the door is closed again to resume the cycle.
STOP/UNLOCK	Microwave Pause/Stop Function	The STOP/UNLOCK button stops any microwave oven function except for the clock. The microwave oven will also turn off when the door is opened. When the door is opened, the element(s) will turn off, but the microwave oven light will remain on. Close the door and touch the START button to resume the preset cycle.

Keypad	Feature	Instructions
STOP/UNLOCK	2-Step Door Opening	This microwave comes with the added feature of a 2-step door opening functionality to avoid unintended access. The STOP/UNLOCK button can be used to pause/cancel the function during or after cook time. The STOP/UNLOCK button can be used for 2-step door opening: **1.** Once you set the cooking time and press the START button, the Door Lock icon will appear on the display. **2.** To open the microwave: ■ Press STOP/UNLOCK. ■ Pull the door handle. **NOTE:** Once you press the STOP/UNLOCK button to stop/pause any function, the Door Lock icon will disappear for 10 seconds and you will be able to pull the door handle to open the door. The Door Lock icon will reappear after 10 seconds and require you to repeat steps 1 and 2 to open the door. **NOTE:** When the machine is powered on after plug-in, the 2-Step Door function will not be triggered. If a cooking cycle starts after the door closes, then 2 steps are required to open the door. Once the 2 steps have been used to open the door, if the door closes and no cooking power is applied, then you can open the door by just pulling the door handle. **NOTE:** This microwave comes with the added feature of a 2-step door opening functionality to avoid unintended access. When children do not have access to the appliance, there is a disable function if the 2-step functionality is not needed. Disable/Enable 2-step door function operation on the display: Steps to disable the 2-step door function operation: **1.** After pressing the STOP/UNLOCK button for 3 seconds, “dI: 0” will show on the display. **2.** After pressing the “0” button, “dI: 1” will show on the display. **3.** Press the START button to confirm. **NOTE:** DI (Disable) **NOTE:** If you unplug the microwave, it will remember the last operation. You will not need to disable or enable the 2 step door function again. Steps to enable the 2-step door function operation: **1.** After pressing the STOP/UNLOCK button for 3 seconds, “EA: 0” will show on the display. **2.** After pressing the “0” button, “EA: 1” will show on the display. **3.** Press the START button to confirm. **NOTE:** EA (Enable) **IMPORTANT:** Disabling this feature should only be done when the owner is certain and children are not present.
0-9	Keypad Number	User can press 0-9 keypad number to select cook time, food class, food weight and power level.
Clock	Set the clock	The function allows to set the clock. To use: **1.** In standy mode, Press “Clock” button, current time will show on the display. If no, it will show default time “00:00” **2.** Press “keypad 0-9” button to adjust cook time. **3.** Press START/+30 Sec or Clock button to confirm.
Keep Warm	Keep Warm	The function allows to keep your dishes warm. To use: **1.** In standy mode, Press “Keep Warm” button, default time “30:00” will show on the display. **2.** Press “Keep Warm” or keypad 0-9 button to select 15 min, 30 min, 45 min or 60 min.

Keypad	Feature	Instructions
		3. Press START button. **NOTE:** The Keep Warm cycle last for a duration of 15 min (default 30 minutes), the maximum time is 60 min. Each 15 min cycle, microwave will be turned on 2.5 min. After cooking END, the cavity lamp is off and fan will work for 1 min.
Keep Warm	Turn on or off beep sound	The function allows to turn on or off the beep sound: **1.** Press “Keep Warm” button and hold 3 seconds to put into mute, the MUTE OFF icon will be shown on display. **2.** Hold the button again for 3 seconds to turn on the sound.
Popcorn	Popcorn	To use the popcorn preset, follow the instructions below: **1.** In standby mode, Press “Popcorn” button repeatedly to select the bag size (2.75, 3.0 or 3.5 oz). **2.** Press START button.
Defrost	Defrost	The Defrost function helps that frozen food. To defrost, follow the instructions below: **1.** Press “Defrost” button, P01 will show on display. **2.** Press “Defrost” button or keypad 0-9 button to select Manual defrost or the desired food class. P01…P04. **3.** Press START button to confirm. P01-Manual Defrost: **4.** Default time “00:00” will show on the display. **5.** Press keypad 0-9 button to adjust defrost cooking time. **6.** Press START button. P02-P04 Auto Defrost **7.** Display will show the default weight. **8.** Press keypad 0-9 button to adjust desired weight. **9.** Press START button.
Reheat	Reheat	To reheat using preset functions, follow the instructions below: **1.** In standby mode, Press “Reheat” button, P01 will show on display. **2.** Press “Reheat” button or keypad 0-9 button to select the food class. P01…P04. **3.** Press START button. **NOTE:** See the Reheat section in this guide for the food category or reference sticker on the front plate of the microwaves. **4.** Sensor Cooking: A sensor in the microwave oven detects humidity released from the food as it heats and adjust the cook time accordingly. (For non-sensor cooking, the display will show the default weight. Press the keypad 0-9 button to adjust desired weight. Press the START button.)
Cook	Cook	For Cook mode, it is not necessary to set the time and power, follow the instructions below: **1.** In standby mode, Press “Cook” button, the P01 will show on display. **2.** Press keypad 0-9 button or “Cook” button to select a food category. See the Cook Menu section in this guide for the food category or reference sticker on the front plate of the microwaves. **3.** Press START button. By pressing the STOP/UNLOCK button again will stop the cooking function and microwave oven will switch to standby mode (Sensor Cooking)

Keypad	Feature	Instructions
Soften	Soften	The Soften function is used to soften food. To use: **1.** In standby mode, Press “Soften” button, P01 will show on display. **2.** Press “Soften” button or keypad 0-9 button to select a food category, see the Soften section in this guide for the food category or reference the sticker on the door of the microwave. Press START button to confirm. **3.** Use keypad 0-9 button to adjust the quantity **4.** Press START button.
Melt	Melt	The Melt function is used to melt food. To use: **1.** In standby mode, Press “Melt” button, P01 will show on display. **2.** Press “Melt” button or keypad 0-9 button to select a food category, see the Melt section in this guide for the food category or reference the sticker on the door of the microwave. Press Start button to confirm. **3.** Use keypad 0-9 button to adjust the quantity. **4.** Press START button.
Steam Clean	Auto cleaning cycle	The cleaning cycle will help to clean the microwave oven cavity 1. Place 1 cup of water (~250mL) in the middle of the cavity. 2. Press "Steam Clean" button, default "11:00" time will show on display 3. Press the START button to start the function (After finishing the water heat-up cycle (8 min), the cavity lamp and fan will be off , the countdown time is shown.) **NOTE:** Please follow Tips and Suggestions in Steam Clean section

MICROWAVE OVEN USE

A magnetron in the microwave oven produces microwaves which reflect off the metal floor, walls, and ceiling and pass through the turntable and appropriate cookware to the food. Microwaves are attracted to and absorbed by fat, sugar, and water molecules in the food, causing them to move, producing friction and heat which cooks the food.

- To avoid damage to the microwave oven, do not lean on or allow children to swing on the microwave oven door.
- To avoid damage to the microwave oven, do not operate microwave oven when it is empty.
- Baby bottles and baby food jars should not be heated in microwave oven.
- Clothes, flowers, fruit, herbs, wood, gourds, and paper, including brown paper bags and newspaper, should not be dried in the microwave oven.
- Paraffin wax will not melt in the microwave oven because it does not absorb microwaves.
- Use oven mitts or pot holders when removing containers from microwave oven.
- Do not overcook potatoes. At the end of the recommended cook time, potatoes should be slightly firm. Let potatoes stand for 5 minutes. They will finish cooking while standing.
- Do not cook or reheat whole eggs inside the shell. Steam buildup in whole eggs may cause them to burst, requiring significant cleanup of microwave oven cavity. Cover poached eggs and allow a standing time.

Food Characteristics

When microwave cooking, the amount, size and shape, starting temperature, composition and density of the food affect cooking results.

Amount of Food

The more food heated at once, the longer the cook time needed. Check for doneness and add small increments of time if necessary.

Size and Shape

Smaller pieces of food will cook more quickly than larger pieces, and uniformly shaped foods cook more evenly than irregularly shaped food.

Starting Temperature

Room temperature foods will heat faster than refrigerated foods, and refrigerated foods will heat faster than frozen foods.

Composition and Density

Foods high in fat and sugar will reach a higher temperature and will heat faster than other foods. Heavy, dense foods, such as meat and potatoes, require a longer cook time than the same size of a light, porous food, such as cake.

Cooking Guidelines

Covering

Covering food helps retain moisture, shorten cook time, and reduce spattering. Use the lid supplied with cookware. If a lid is not available, wax paper, paper towels, or plastic wrap approved for microwave ovens may be used. Plastic wrap should be turned back at one corner to provide an opening to vent steam. Condensation on the door and cavity surfaces is normal during heavy cooking.

Stirring and Turning

Stirring and turning redistribute heat evenly to avoid overcooking the outer edges of food. Stir from outside to center. If possible, turn food over from bottom to top.

Arranging

If heating irregularly shaped or different-sized foods, arrange the thinner parts and smaller-sized items toward the center. If cooking several items of the same size and shape, place them in a ring pattern, leaving the center of the ring empty.

Piercing

Before heating, use a fork or small knife to pierce or prick foods that have a skin or membrane, such as potatoes, egg yolks, chicken livers, hot dogs, and sausage. Prick in several places to allow steam to vent.

Shielding

Use small, flat pieces of aluminum foil to shield the thin pieces of irregularly shaped foods, bones and foods such as chicken wings, leg tips, and fish tails. See the “Aluminum Foil and Metal” section first.

Standing Time

Food will continue to cook by the natural conduction of heat even after the microwave cooking cycle ends. The length of standing time depends on the volume and density of the food.

Cookware and Dinnerware

Cookware and dinnerware must fit on the turntable. Always use oven mitts or pot holders when handling because any dish may become hot from heat transferred from the food. Do not use cookware and dinnerware with gold or silver trim. Use the following chart as a guide, then test before using.

Material	Recommendations
Aluminum Foil, Metal	See the “Aluminum Foil and Metal” section.
Browning Dish	Bottom must be at least 3/16" (5 mm) above the turntable. Follow manufacturer’s recommendations.
Ceramic Glass, Glass	Acceptable for use
China, Earthenware	Follow manufacturer’s recommendations.
Melamine	Follow manufacturer’s recommendations.
Paper: Towels, Dinnerware, Napkins	Use non-recycled and those approved by the manufacturer for microwave oven use.
Plastic: Wraps, Bags, Covers, Dinnerware, Containers	Use those approved by the manufacturer for microwave oven use.
Pottery and Clay	Follow manufacturer’s recommendations.
Silicone Bakeware	Follow manufacturer’s recommendations.
Straw, Wicker, Wooden Containers	Do not use in microwave oven.
Wax Paper	Acceptable for use

To Test Cookware or Dinnerware for Microwave Use:

1. Place cookware or dinnerware in microwave oven with 1 cup (250 mL) of water beside it.
2. Cook at 100% cooking power for 1 minute.

Do not use cookware or dinnerware if it becomes hot and the water stays cool.

Aluminum Foil and Metal

Always use oven mitts or pot holders when removing dishes from the microwave oven.

Aluminum foil and some metal can be used in the microwave oven. If not used properly, arcing (a blue flash of light) can occur and cause damage to the microwave oven.

OK for Use

Racks and bakeware supplied with the microwave oven (on some models), aluminum foil for shielding, and approved meat thermometers may be used with the following guidelines:

- To avoid damage to the microwave oven, do not allow aluminum foil or metal to touch the inside cavity walls, ceiling, or floor.
- Always use the turntable.
- To avoid damage to the microwave oven, do not allow contact with another metal object during microwave cooking.

Do Not Use

Metal cookware and bakeware, gold, silver, pewter, non-approved meat thermometers, skewers, twist ties, foil liners such as sandwich wrappers, staples, and objects with gold or silver trim or a metallic glaze should not be used in the microwave oven.

For Use with Grill Element

Use the provided tall grill rack with an oven proof pan to catch the drippings.

Cooking Menu

The microwave oven has been programmed with common microwave foods, their quantities, cook powers, and cook times.Use the following chart as a guide for preset cooking.

Item	Food Category	Quantity
P01	**Fresh Vegetables** From room temperature. Put food into microwave safe dish. Add 2 tablespoons water to 1-2 cups, add 4 tablespoons water to 3-4 cups. Cover the dish, leaving an air ventilation. Stir and let stand 3 mins after cooking.	1-4 cups (Sensor cooking)
P02	**Frozen Vegetables** From frozen temperature. Place in microwave-safe container Add 2 tablespoons water to 1-2 cups, add 4 tablespoons water to 3-4 cups. Cover the dish, leaving an air ventilation. Stir and let stand 3 min after cooking.	1-4 cups (Sensor cooking)
P03	**Oatmeal** Place in microwave-safe container and add water depends on package directions adds water cover with plastic wrap and fold back one edge about 1/4” (6 mm) to make a vent.Place container in the center of the oven. After cooking stir with spoon or whisk until uniform.	1-4 cups (Sensor cooking)
P04	**Frozen Entrée** Remove entrée from package and loosen film covering on 3 sides of the container leaving one of the short sides still attached. Loosely cover with film.Allow the 10.5 and 20 oz (297 and 567 g) entrees to stand 3 minutes.	10 oz, 20 oz, (283 g, 567 g) (Sensor cooking)
P05	**Potato-Large** Enter 1-4 pieces, 10-12 oz (283-340 g) each. Pierce each potato several times with a fork. Place on paper towel on turntable center. Let stand 5 minutes after cooking.	1-4 pieces/ 1 piece
P06	**Potato-Small** Enter 1-16 pieces, 3-5 oz (85-141 g) each. Pierce each potato several times with a fork. Place on paper towel on turntable center. Let stand 5 minutes after cooking.	1-16 pieces/ 1 piece

Popcorn

2.75, 3.0 or 3.5 oz bags.

- Do not use regular paper bags or glassware
- Pop only one package of popcorn at a time.
- Follow manufacturer's instructions when using a microwave popcorn popper.
- Listen for popping to slow to one pop every 1 or 2 seconds, and then stop the cycle.
- Do not reppop unpopped kernels.
- For best results, use fresh bags of popcorn.
- Cooking results may vary by brand and fat content.

NOTE: Follow the instructions provided by the microwave popcorn manufacture.

Reheat

Times and cooking powers have been preset for reheating a number of food types. Use the following chart as a guide.

Item	Food Category	Quantity
P01	**Dinner plate** Place food on plate. Cover with plastic wrap and vent. Let stand 2-3 minutes after reheating.	Large (289-440g), Small (Sensor Cooking)
P02	**Reheat Pizza** Place on paper towel lined microwave-safe plate.	1-3 slices 4 oz (113 g) per slice (Sensor Cooking)
P03	**Soup** Place in microwave-safe container. Cover with plastic wrap and vent. Stir and let stand 2-3 minutes after reheating.	1-4 cups
P04	**Beverage** Do not cover.	1-4 cups

Soften

Soften function may be used to soften your food. Times and cooking powers have been preset for a number of food types. Use the following chart as a guide.

Item	Food Category	Quantity
P01	**Butter** Unwrap and place in microwave-safe container.	0.5-2.0 sticks/0.5 stick
P02	**Ice Cream** Unwrap and place in microwave-safe container.	16-64 oz/16 oz
P03	**Cream Cheese** Unwrap and place in microwave-safe container.	3 oz, 8 oz

Melt

Melt function may be used to melt your food. Times and cooking powers have been preset for a number of food types.

Use the following chart as a guide.

Item	Food Category	Quantity
P01	**Butter** Unwrap and place in microwave-safe container.	0.5-2.0 sticks/0.5 stick
P02	**Chocolate Chips** Unwrap and place in microwave-safe container	4-12 oz/4 oz (113-340 g / 113 g)

Keep Warm

This function allows you to keep your dishes warm.

1. Press "Keep Warm" button
2. Press keypad 0-9 button to select suitable time, then press START button to start. Default time is 30 min, maximum time is 60 min.

Auto Defrost

- For optimal result, food should be 0ºF (-18ºC) or colder when defrosting.
- Unwrap foods and remove lids (from fruit juice) before defrosting.
- Shallow packages will defrost more quickly than deep blocks.
- Separate food pieces as soon as possible during or at the end of the cycle for more even defrosting.
- Foods left outside the freezer for more than 20 minutes or frozen ready-made food should not be defrosted using the Defrost feature but should be defrosted manually.
- Use small pieces of aluminum foil to shield parts of food such as chicken wings leg tips, and fish tails. See the “Aluminum Foil and Metal” section first.
- Times and cooking powers have been preset for defrosting a number of food types.

Item	Food Category	Weight
P01	Manual Defrost	----------
P02	Poultry	0.2 lbs-6.6 lbs/0.1 lbs
P03	Meat	0.2 lbs-6.6 lbs/0.1 lbs
P04	Fish	0.2 lbs-6.6 lbs/0.1 lbs

Use the following chart as a guide when defrosting poultry, meat or fish

DEFROST PREPARATION CHART	
POULTRY	
Chicken: whole and cut up **Cornish hens**	Place in a microwave safe container, chicken breast side up. Remove giblets from whole chicken.
MEAT	
Beef: ground, steaks, roast, stew **Lamb:** stew and chops **Pork:** chops, ribs, roasts, sausage	The narrow or fatty areas of irregular-shaped cuts should be shielded with foil before defrosting. Do not defrost less than 1/4 lb (113 g) or two 4 oz (113 g) patties. Place all meats in a microwave-safe container.
FISH	
Fillets, Steaks, Whole, Shellfish	Place in a microwave-safe container.

MICROWAVE OVEN CARE

General Cleaning

IMPORTANT: Before cleaning, make sure all controls are off and the microwave oven is cool. Always follow label instructions on cleaning products.

Soap, water, and a soft cloth or sponge are suggested unless otherwise noted.

MICROWAVE OVEN CAVITY

To avoid damage to the microwave oven cavity, do not use soap-filled scouring pads, abrasive cleaners, steel-wool pads, gritty washcloths, or some recycled paper towels.

To avoid damage to stainless steel models, rub in direction of grain.

The area where the microwave oven door and frame touch when closed should be kept clean.

Average soil

- Mild, nonabrasive soaps and detergents:
  Rinse with clean water and dry with soft, lint-free cloth.

Heavy soil

- Mild, nonabrasive soaps and detergents:
  Heat 1 cup (250 mL) of water for 2 to 5 minutes in microwave oven. Steam will soften soil. Rinse with clean water and dry with soft, lint-free cloth.

Odors

- Lemon juice or vinegar:
  Heat 1 cup (250 mL) of water with 1 tbs (15 mL) of either lemon juice or vinegar for 2 to 5 minutes in microwave oven.

Microwave Inlet Cover

To avoid arcing and microwave oven damage, the microwave inlet cover (see the “Parts and Features” section) should be kept clean.

- Wipe with wet cloth.

MICROWAVE OVEN DOOR AND EXTERIOR

The area where the microwave oven door and frame touch when closed should be kept clean.

- Mild, nonabrasive soaps and detergents:
  Rinse with clean water and dry with soft, lint-free cloth.
- Glass cleaner and paper towels or nonabrasive plastic scrubbing pad:
  Apply glass cleaner to towel, not directly to surface.

CONTROL PANEL

- Sponge or soft cloth and water:
  Dampen sponge with water and wipe panel. Dry with soft cloth.
- To avoid damage to the control panel, do not use chemical or abrasive cleansers.

TURNTABLE

Replace turntable immediately after cleaning. Do not operate the microwave oven without the turntable in place.

- Mild cleanser and scouring pad
- Dishwasher

TROUBLESHOOTING

First try the solutions suggested here. If you need further assistance or more recommendations that may help you avoid a service call, refer to the warranty, or visit **www.kitchenaid.com/owners**, or in Canada **www.kitchenaid.ca/owners.**

Contact us by mail with any questions or concerns at the address below:

In the U.S.A.:

KitchenAid Brand Home Appliances
Customer eXperience Centre
553 Benson Road
Benton Harbor, MI 49022-2692

In Canada:

KitchenAid Brand Home Appliances
Customer eXperience Centre
220-6750 Century Ave.
Mississauga, Ontario L5N 0B7

Please include a daytime phone number in your correspondence.

If you experience	Recommended Solutions
Nothing will operate	**Check the following:** ■ **Household fuse or circuit breaker:** If a household fuse has blown or a circuit breaker has tripped, replace the fuse or reset the circuit breaker. If the problem continues, call an electrician.
Microwave oven will not operate	**Check the following:** ■ **Magnetron:** Try to heat 1 cup (250 mL) of cold water for 2 minutes at 100% cooking power. If water does not heat, try the steps in the bullets below. If microwave oven still does not operate, call for service. ■ **Door:** Firmly close door. On some models, if a packaging spacer is attached to the inside of the door, remove it, then firmly close door. If a message about the door appears in the display, the door has been closed for 5 minutes or more without the microwave oven being started. This occurs to avoid unintended starting of the microwave oven. Open and close the door, then start the cycle. ■ **Stop (Unlock):** Make sure Stop/Unlock is OFF. Make sure Demo mode (on some models) is OFF.
Microwave oven makes humming noise	■ This is normal and occurs when the power supply in the magnetron cycles on.
Microwave oven door looks wavy	■ This is normal and will not affect performance.
Turntable will not operate	**Check the following:** ■ **Turntable:** Make sure turntable is correct side up and is sitting securely on the turntable support. See the “Turntable” section. ■ **Turntable support:** Remove turntable. Remove and clean turntable hub, support, and rollers. Replace hub, support, and turntable. Place 1 cup (250 mL) of water on the turntable, then restart microwave oven. If it still is not working, call for service. For information on warranty, please visit **www.kitchenaid.com/owners,** or in Canada **www.kitchenaid.ca/owner**. Do not operate the microwave oven without turntable and turntable support working properly.
Turntable alternates rotation directions	■ This is normal and depends on motor rotation at the beginning of the cycle.
Display shows messages	■ A flashing “0:00” means there has been a power failure. Reset the clock.
Display shows time countdown, but the microwave oven is not operating	**Check the following:** ■ **Timer:** See the “Timer” section.
Tones are not sounding	**Check the following:** ■ **Tones:** See the “Tones” section.
Cooking times seem too long	**Check the following:** ■ **Cooking power:** See the “Power” section. ■ **Amount of food:** Larger amounts of food need longer cooking times. ■ **Voltage:** Have a qualified electrician check the electrical system in the home.
Odor coming from microwave oven during convection and/or grill cooking	■ This is normal for the first few convection and/or grill cycles. The odor will dissipate with repeated use.

If you experience	Recommended Solutions
Radio, TV, or cordless phone interference	**Check the following:** ■ **Proximity:** Move the receiver away from the microwave oven or adjust the radio or TV antenna. If the microwave oven is plugged into the same outlet, try a different outlet for the electronic device. ■ **Soil:** Make sure the microwave oven door and sealing surfaces are clean. ■ **Frequency:** Some 2.4 GHz based cordless phones and home wireless networks may experience static or noise while microwave oven is ON. Use a corded phone, a different frequency cordless phone, or avoid using these items during microwave oven operation.

ASSISTANCE OR SERVICE

If you need service:

For information on warranty, please visit **www.kitchenaid.com/owners**, or in Canada **www.kitchenaid.ca/owners**.

If you need replacement parts:

If you need to order replacement parts, we recommend that you use only factory specified parts. These factory specified parts will fit right and work right because they are made with the same precision used to build every new KitchenAid appliance.

To locate factory specified parts in your area, call us or your nearest KitchenAid designated service center.

In the U.S.A.

Call the KitchenAid Customer eXperience Center toll-free: **1-800-422-1230** or visit our website at **www.kitchenaid.com/owners**.

Our consultants provide assistance with:

- Scheduling of service. KitchenAid appliances designated service technicians are trained to fulfill the product warranty and provide after-warranty service anywhere in the United States.
- Features and specifications on our full line of appliances.
- Referrals to local KitchenAid appliance dealers.
- Installation information.
- Use and maintenance procedures.
- Accessory and repair parts sales.
- Specialized customer assistance (Spanish speaking, hearing impaired, limited vision, etc.).

For further assistance:

If you need further assistance, you can write to KitchenAid with any questions or concerns at:

KitchenAid Brand Home Appliances
Customer eXperience Center
553 Benson Road
Benton Harbor, MI 49022-2692

Please include a daytime phone number in your correspondence.

In Canada

Call the KitchenAid Customer eXperience Center toll-free: **1-800-807-6777** or visit our website at **www.kitchenaid.ca/owners.**

Our consultants provide assistance with:

- Scheduling of service. KitchenAid appliances designated service technicians are trained to fulfill the product warranty and provide after-warranty service anywhere in Canada.
- Features and specifications on our full line of appliances.
- Referrals to local KitchenAid appliance dealers.
- Use and maintenance procedures.
- Accessory and repair parts sales.

For further assistance:

If you need further assistance, you can write to KitchenAid with any questions or concerns at:

KitchenAid Brand Home Appliances
Customer eXperience Centre
200–6750 Century Ave.
Mississauga, Ontario L5N 0B7

Please include a daytime phone number in your correspondence.

Replacement Parts

Glass Turntable
Part Number W11664476

Turntable Hub
Part Number W11815766

Turntable Support and Rollers
Part Number W11815765