MICROWAVE OVEN

Use & Care Guide

For questions about features, operations/performance, parts, accessories, or service, call: **1-866-698-2538** or visit our website at **www.whirlpool.com**.

In Canada, call: **1-800-807-6777** or visit our website at **www.whirlpool.ca**.

HORNO DE MICROONDAS

Manual de uso y cuidado

Si tiene preguntas sobre características, funcionamiento, rendimiento, piezas, accesorios o servicio técnico, llame al: **1-866-698-2538** o visite nuestro sitio web en **www.whirlpool.com**.

En Canadá, llame al: **1-800-807-6777** o visite nuestro sitio web en **www.whirlpool.ca.**

TABLE OF CONTENTS

MICROWAVE OVEN SAFETY 3
INSTALLATION INSTRUCTIONS 5
Unpacking 5
Location Requirements 5
Electrical Requirements 5
PARTS AND FEATURES 6
Turntable 6
MICROWAVE OVEN CONTROL 6
Keypad instruction 7
Display 10
Standy mode 10
Start 10
Quick start/ Add 30 seconds 10
STOP/UNLOCK 10
To Use Non-sensor Menu 10
Tones On /Off 10
Control Lock 10
Cooking End 10
To Use sensor Menu 10
Clock 10
Timer 10
Mute On/Off 10
Cooking End 10
MICROWAVE OVEN USE 11
Food Characteristics 11
Cooking Guidelines 11
Cookware and Dinnerware 12
Aluminum Foil and Metal 12
Cooking Menu 12
Popcorn 12
Potato 13
Inner Plate 13
Soften Menu 13
Melt Menu 13
Auto Defrost 13
Steam Clean 14
Keep Warm 14
MICROWAVE OVEN CARE 15
General Cleaning 15
TROUBLESHOOTING 16
ASSISTANCE OR SERVICE 17
In the U.S.A. 17
In Canada 17
Replacement Parts 17
WARRANTY 18

TABLA DE CONTENIDOS

SEGURIDAD DEL HORNO DE MICROONDAS 19
INSTRUCCIONES DE INSTALACIÓN 21
Desempaque 21
Requisitos de ubicaci 21
Requisitos eléctricos 21
PIEZAS Y CARACTERÍSTICAS 22
Plato girato 22
CONTROL HORNO MICROONDAS 22
Keypad instruction 23
Mostrar 26
Modo de espera 26
Comienzo 26
Inicio rápido / Aadir 30 segu 26
Cancelar 27
To Use Non-sensor Menu 27
Reloj 26
Temporizador 26
Activar/desactivar tonos 27
Bloqueo de controles 27
Final de cocción 27
Para usar el menú del sensor 27
(Plato de Cena / Recalentar, Menú Cocinar)
USO DEL HORNO MICROONDAS 28
Características de los alimentos 28
Pautas para cocinar 28
Utensilios de cocina y vajilla 29
Papel de aluminio y metal 29
Menú de cocción 30
Palomitas de maiz 30
Patata 30
Plato llano 30
Menú Suavizar 30
Menú Derretir 30
Descongelación automática 31
Limpia a vapor 31
mantener caliente 31
CUIDADO DEL HORNO MICROONDAS 32
Limpieza general 32
SOLUCIÓN DE PROBLEMAS 33
AYUDA O SERVICIO TÉCNICO 34
En Estados Unidos 34
En Canadá 34
Piezas de repuest 34
WARRANTY 35

MICROWAVE OVEN SAFETY

Your safety and the safety of others are very important.

We have provided many important safety messages in this manual and on your appliance. Always read and obey all safety messages.

This is the safety alert symbol.

This symbol alerts you to potential hazards that can kill or hurt you and others.

All safety messages will follow the safety alert symbol and either the word “DANGER” or “WARNING.” These words mean:

⚠ DANGER — **You can be killed or seriously injured if you don't immediately follow instructions.**

⚠ WARNING — **You can be killed or seriously injured if you don't follow instructions.**

All safety messages will tell you what the potential hazard is, tell you how to reduce the chance of injury, and tell you what can happen if the instructions are not followed.

IMPORTANT SAFETY INSTRUCTIONS

When using electrical appliances basic safety precautions should be followed, including the following:

WARNING: To reduce the risk of burns, electric shock, fire, injury to persons, or exposure to excessive microwave energy:

- Read all instructions before using the microwave oven.
- Read and follow the specific “PRECAUTIONS TO AVOID POSSIBLE EXPOSURE TO EXCESSIVE MICROWAVE ENERGY” found in this section.
- The microwave oven must be grounded. Connect only to properly grounded outlet. See “GROUNDING INSTRUCTIONS” found in the “INSTALLATION INSTRUCTIONS” section.
- Install or locate the microwave oven only in accordance with the provided Installation Instructions.
- Some products such as whole eggs in the shell and sealed containers - for example, closed glass jars - are able to explode and should not be heated in the microwave oven.
- Use the microwave oven only for its intended use as described in the manual. Do not use corrosive chemicals or vapors in the microwave oven. This type of oven is specifically designed to heat, cook, or dry food. It is not designed for industrial or laboratory use.
- As with any appliance, close supervision is necessary when used by children.
- Do not operate the microwave oven if it has a damaged cord or plug, if it is not working properly, or if it has been damaged or dropped.
- The microwave oven should be serviced only by qualified service personnel. Call an authorized service company for examination, repair, or adjustment.
- Do not cover or block any openings on the microwave oven.
- Do not store this microwave oven outdoors. Do not use the microwave oven near water - for example, near a kitchen sink, in a wet basement, near a swimming pool, or similar locations.
- Do not immerse cord or plug in water.
- Keep cord away from heated surfaces.
- Do not let cord hang over edge of table or counter.
- See door surface cleaning instructions in the “Microwave Oven Care” section.
- To reduce the risk of fire in the oven cavity:
  - Do not overcook food. Carefully attend the microwave oven when paper, plastic, or other combustible materials are placed inside the oven to facilitate cooking.
  - Remove wire twist-ties from paper or plastic bags before placing bags in oven.
  - If materials inside the oven ignite, keep oven door closed, turn oven off, and disconnect the power cord, or shut off power at the fuse or circuit breaker panel.
  - Do not use the cavity for storage purposes. Do not leave paper products, cooking utensils, or food in the cavity when not in use.

■ Liquids, such as water, coffee, or tea are able to be overheated beyond the boiling point without appearing to be boiling. Visible bubbling or boiling when the container is removed from the microwave oven is not always present. THIS COULD RESULT IN VERY HOT LIQUIDS SUDDENLY BOILING OVER WHEN THE CONTAINER IS DISTURBED OR A SPOON OR OTHER UTENSIL IS INSERTED INTO THE LIQUID.

To reduce the risk of injury to persons:

– Stir the liquid both before and halfway through heating it.

– Do not use straight-sided containers with narrow necks.

– After heating, allow the container to stand in the microwave oven for a short time before removing the container.

– Use extreme care when inserting a spoon or other utensil into the container.

SAVE THESE INSTRUCTIONS

PRECAUTIONS TO AVOID POSSIBLE EXPOSURE TO EXCESSIVE MICROWAVE ENERGY

(a) Do not attempt to operate this oven with the door open since open-door operation can result in harmful exposure to microwave energy. It is important not to defeat or tamper with the safety interlocks.

(b) Do not place any object between the oven front face and the door or allow soil or cleaner residue to accumulate on sealing surfaces.

(c) Do not operate the oven if it is damaged. It is particularly important that the oven door close properly and that there is no damage to the:

(1) Door (bent),

(2) Hinges and latches (broken or loosened),

(3) Door seals and sealing surfaces.

(d) The oven should not be adjusted or repaired by anyone except properly qualified service personnel.

This device complies with Part 18 of the FCC Rules.

INSTALLATION INSTRUCTIONS

Unpacking

1. Empty the microwave oven of any packing materials.
2. Clean the inside with a soft, damp cloth.
3. Check for damage, such as:
   - a door that is not lined up correctly,
   - damage around the door, or
   - dents on the interior or exterior of the microwave oven.

   If there is any damage, do not operate the microwave oven until a designated service technician has checked it and made any needed repairs.

NOTE: To avoid damage to the microwave oven, **do not remove microwave inlet cover.** See the “Parts and Features” section.

Location Requirements

⚠WARNING

Excessive Weight Hazard

Use two or more people to move and install microwave oven.

Failure to do so can result in back or other injury.

IMPORTANT: The control side of the microwave oven is the heavy side. Handle the microwave oven gently. The weight of the microwave oven is over 35 lbs (15.9 kg).

- Place the microwave oven on a cart, counter, table, or shelf that is strong enough to hold the microwave oven and the food and utensils you place inside it.
- The microwave oven should be at a temperature above 50°F (10°C) for proper operation.

NOTE: Some models can be built into a wall or cabinet by using one of the trim kits listed in the “Assistance or Service” section.

- Do not block the exhaust vents or air intake openings. Allow a few inches of space at the back and side of the microwave oven where the exhaust vents are located. Blocking the exhaust vents could cause damage to the microwave oven as well as poor cooking results.
- Make sure the microwave oven legs are in place to ensure proper airflow. If vents are blocked, a sensitive thermal device may automatically turn the microwave oven off. The microwave oven should work properly once it has cooled.

Electrical Requirements

⚠WARNING

Electrical Shock Hazard

Plug into a grounded 3 prong outlet.

Do not remove ground prong.

Do not use an adapter.

Do not use an extension cord.

Failure to follow these instructions can result in death, fire, or electrical shock.

Observe all governing codes and ordinances.

Required:

- A 120-volt, 60 Hz, AC-only, 15- or 20-amp electrical supply with a fuse or circuit breaker

Recommended:

- A time-delay fuse or time-delay circuit breaker
- A separate circuit serving only this microwave oven

GROUNDING INSTRUCTIONS

- **For all cord connected appliances:**
  The microwave oven must be grounded. In the event of an electrical short circuit, grounding reduces the risk of electric shock by providing an escape wire for the electric current. The microwave oven is equipped with a cord having a grounding wire with a grounding plug. The plug must be plugged into an outlet that is properly installed and grounded.

WARNING:

Improper use of the grounding plug can result in a risk of electric shock. Consult a qualified electrician or serviceman if the grounding instructions are not completely understood, or if doubt exists as to whether the microwave oven is properly grounded.

Do not use an extension cord. If the power supply cord is too short, have a qualified electrician or serviceman install an outlet near the microwave oven. A short power supply cord is provided to reduce the risks resulting from becoming entangled in or tripping over a longer cord.

SAVE THESE INSTRUCTIONS

PARTS AND FEATURES

This manual may cover several different models. The model you have purchased may have some or all of the features shown here. The appearance of your particular model may differ slightly from the illustrations in this manual.

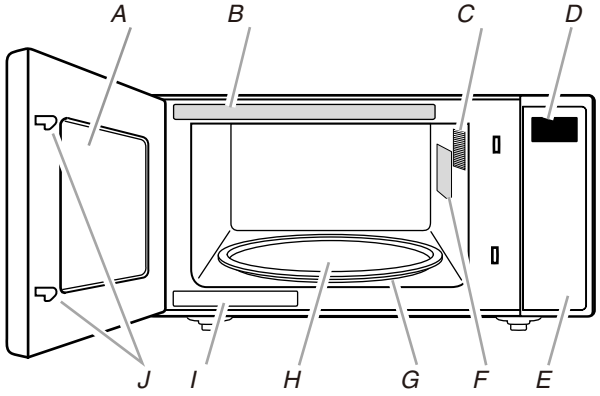

A. Window
B. Cooking guide label
C. Microwave oven light
D. Display
E. Control panel
F. Microwave inlet cover
G. Removable turntable support
H. Glass turntable
I. Model and serial number plate
J. Door lock system

Turntable

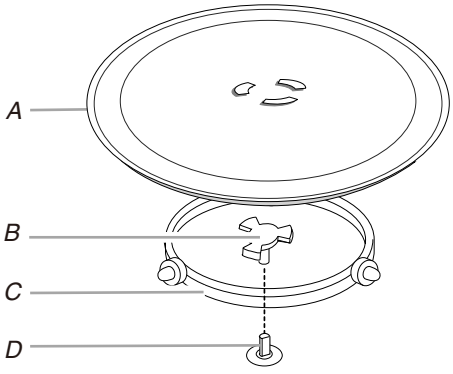

A. Turntable
B. Hub
C. Support
D. Shaft

The turntable can rotate in either direction to help cook food more evenly. For best cooking results, do not operate the microwave oven without having the turntable in place. See the “Assistance or Service” section to reorder any of the parts.

To Install:

1. Place the support on the microwave oven cavity bottom.
2. Place the turntable on the support.

   Fit the raised, curved wedges in the center of the turntable bottom between the three spokes of the hub. The rollers on the support should fit inside the turntable bottom ridge.

MICROWAVE OVEN CONTROL

MW Defrost Timer Qty Lbs

Lock Steam Clock Mute Oz
Clean

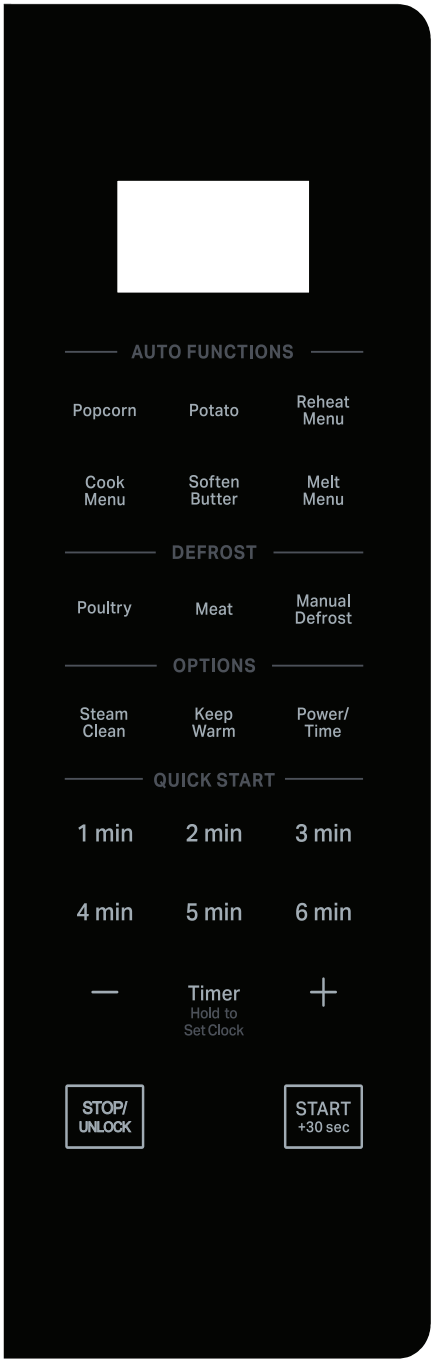

Keypad	Feature	Instructions
Timer	Hold to Set the Clock	To set the clock, follow the instructions below: 1. Press TIMER for 3 seconds to enter clock setting. 2. Press the +/- button to set the hour, press START button to confirm. 3. Press the +/- button to set the minute. 4. Press START button. **NOTE:** The microwave oven must be in standby. It will also appear every time the product is plugged in. The screen shows“12 Hr” (“12” flashing), use +/- to change 12 or 24 hour format, press START to confirm; then the screen shows “12:00”.
Timer	Set cooking Timer	The cooking timer functions like a stop watch. To set the cooking timer, following the instructions below: 1. Press Timer button. 2. Press +/- button to enter desired time. 3. Press START button. NOTE: While the Timer countdown is active in the display, touch STOP/UNLOCK to stop the Timer. The timer does not start or stop the microwave oven.
START	Add 30 Seconds	The button START can be used in two ways: 1. To start the microwave by cooking for 30sec with FULL power in standby mode. 2. To increase a cooking time using increments of 30seconds. Each press adds 30 seconds.
START	Start Function	Press the START button to start any cooking function. If cooking is interrupted by opening the door, touch the START button after the door is closed again to resume the cycle.
STOP/UNLOCK	Microwave Pause/Stop Function	The STOP/UNLOCK button stops any microwave oven function except for the clock. The microwave oven will also turn off when the door is opened. When the door is opened, the element(s) will turn off, but the microwave oven light will remain on. Close the door and touch the START button to resume the preset cycle.
STOP/UNLOCK	2-Step Door Opening	This microwave comes with the added feature of a 2-step door opening functionality to avoid unintended access. The STOP/UNLOCK button can be used to pause/cancel the function during or after cook time. The STOP/UNLOCK button can be used for 2-step door opening: 1. Once you set the cooking time and press the START button, the Door Lock icon will appear on the display. 2. To open the microwave: ■Press STOP/UNLOCK. ■Pull the door handle. NOTE: Once you press the STOP/UNLOCK button to stop/pause any function, the Door Lock icon will disappear for 10 seconds and you will be able to pull the door handle to open the door. The Door Lock icon will reappear after 10 seconds and require you to repeat steps 1 and 2 to open the door. NOTE: When the machine is powered on after plug-in, the 2-Step Door function will not be triggered. If a cooking cycle starts after the door closes, then 2 steps are required to open the door. Once the 2 steps have been used to open the door, if the door closes and no cooking power is applied, then you can open the door by just pulling the door handle. NOTE: This microwave comes with the added feature of a 2-step door opening functionality to avoid unintended access. When children do not have access to the appliance, there is a disable function if the 2-step functionality is not needed.

Keypad	Feature	Instructions
		Disable/Enable 2-step door function operation on the display: Steps to disable the 2-step door function operation: 1. After pressing the STOP/UNLOCK button for 3 seconds, “DI:_0” will show on the display. 2. After pressing the “+” button, “DI:_1” will show on the display. 3. Press the START button to confirm. NOTE: DI (Disable) NOTE: If you unplug the microwave, it will remember the last operation. You will not need to disable or enable the 2 step door function again. Steps to enable the 2-step door function operation: 1. After pressing the STOP/UNLOCK button for 3 seconds, “EA:_0” will show on the display. 2. After pressing the “+” button, “EA:_1” will show on the display. 3. Press the START button to confirm. NOTE: EA (Enable) IMPORTANT: Disabling this feature should only be done when the owner is certain and children are not present.
1 min - 6 min	Quick Start	Default power is FULL in this function (P100) Press 1 min, 2min.. or 6 min to start with the time mentioned on the button.
Power/Time	Set Manual Cooking	Press “Power Time” button to set manual power. The default power level is 100%. Press the +/- button to change power level. For example, to set the time to 2:30 in 90% power: 1. Press “Power Level” button, P100 will show on the display. 2. Press-button to decrease power level to 90% (P90 on display). 3. Press START button to confirm and jump to cooking time setting, default “0:15” will show on the display. 4. Press +/- button to adjust the cooking time to “2:30”. 5. Press START button.
Power/Time	Set Manual Cooking	Press “Power Time” button to set manual cooking time. The default power level is 100%. Press +/- button or 1 min-6 min to set the cooking time, follow the instructions below: 1. Press “Cook Time” button, “0:15” will show on the display. 2. Press +/- button or 1 min-6 min to adjust the cooking time. 3. Press START button to start. NOTE: Press the “Power” button to increase/decrease power levels in cyclic way P10 P20 P30……..P100.
Keep Warm	Keep Warm	The function allows to keep your dishes warm. To use: 1. Press "Keep Warm" button, default time "30:00" will show on the display. 2. Press "Keep Warm" or +/- button to select 15min, 30min, 45min or 60min 3. Press START button **NOTE:** The Keep Warm cycle last for a duration of 15minutes (default 30minutes), the maximum time is 60min. Each 15min cycle, microwave will be turned on 1.5 min, then cavity lamp and fan are off, only the countdown time is shown.
Steam Clean	Auto cleaning cycle	The cleaning cycle will help to clean the microwave oven cavity 1. Place 1 cup of water (~250mL) in the middle of the cavity. 2. Press "Steam Clean" button, default "14:00" time will show on display 3. Press the START button to start the function (After finishing the water heat-up cycle (11min), the cavity lamp and fan will be off , the countdown time is shown.) **NOTE:** Please follow Tips and Suggestions in Steam Clean section

Keypad	Feature	Instructions
Tone On/Off	Turn on or off beep sound	The function allows to turn on or off the beep sound: 1. Press STEAM CLEAN button and hold for 5 seconds to put into mute, the Tone Off icon will be shown on display 2.Hold the button again for 5 seconds to turn on the sound.
Manual Defrost	Manual Defrost	Defrost power has been set, select defrost cooking time 1. Press "Manual Defrost" button, default time "0:30" will show on the display. 2. Press +/- button to adjust defrost cooking time. 3. Press START button.
Poultry Defrost	Automatic Defrost	The Poultry Defrost function helps thaw frozen poultry. To defrost, follow the instructions below: 1. Press "Poultry" button,display will show the default weight(0.2lbs). 2. Press +/- button to adjust desired weight. (0.2-6.6bs/0.1lbs) 3. Press START button.
Meat Defrost	Automatic Defrost	The Meat Defrost function helps thaw frozen meat. To defrost, follow the instructions below: 1. Press "Meat" button, display will show the default weight(0.2lbs) 2. Press +/- button to adjust desired weight. (0.2-6.6lbs/0.1lbs) 3. Press START button.
Melt Menu	Melt	The Melt function is used to melt food. To use: 1. Press "Melt Menu", the display will show "P1" 2. Use "Melt Menu" button or +/- button to select a food category, see the Melt Menu section in this guide for the food category or reference the sticker on the front plate of the microwave. Press START button to confirm. 3. Use +/- button to adjust the quantity. 4 Press START button.
Soften Butter	Soften	The Soften Butter function is used to soften butter. To use: 1. Press "Soften Menu", the display will show "0.5" as default stick. 2. Use "Soften Menu" button or +/- button adjust the quantity. 3. Press START button.
Cook Menu	Auto cook	For Cook Menu mode, it is not necessary to set the time and power, follow the instructions below: 1. Press "Cook Menu" button, the "P1" will show on the display. 2. Use +/- button or "Cook Menu" to select a food category. See the Cook Menu section in this guide for the food category or reference sticker on the front plate of the microwaves. 3. Press START button. NOTE: During the cooking process, the display with show to Turn or Add Food (for some food only), press the STOP/UNLOCK button to trigger the unlock function and add or turn the food by pulling the door handle to open the door. By pressing the STOP/UNLOCK button again will stop the cooking function and microwave oven will switch to Standby mode.
Reheat Menu	Automatic Reheat	To reheat using preset functions, follow the instructions below: 1. Press the "Reheat Menu" button, the "P1" will show on the display. 2. Use +/- button or "Reheat Menu" to select a food category. See the REHEAT section in this guide for the food category or reference sticker on the front plate of the microwaves. 3. Press the START button.
Popcorn	Popcorn	To use the popcorn preset, follow the instructions below: 1 Press "Popcorn" button repeatedly to select the bag size (3.0 or 3.5 oz) 2. Press START button
Potato	Potato cooking	To use the potato preset, follow the instructions below: 1. Press "Potato" button repeatedly to select L (Large) or S (Small) potato size 2. Press START to confirm, press +/- to adjust quantity 3. Press START button.

Display

When power is first supplied to the microwave oven, “12 Hr” will appear in the display. User can press TIMER/Clock button or +/- button to toggle between 12 Hr or 24 Hr within 10 seconds. Press START button to confirm. If the “12:00” appears in the display at any other time, a power failure has occurred. Reset the clock if needed. See the “Clock” section.

Standby mode

When no functions are being used, the microwave oven will switch to Standby mode.
After function selection, press the STOP/UNLOCK key to exit the function selection. If you again press the STOP/UNLOCK key it will be a invalid, as cooking mode is not activated.
When cooking mode is activated and the user presses the STOP/UNLOCK button, the STOP/UNLOCK functions will be triggered at the same time. Press the STOP/UNLOCK button again to cancel the function and return to Standby mode.

Start

The START button begins any function. If non-sensor cooking is interrupted by opening the door, pressing START button will resume the cycle.
NOTE: To avoid unintentional operation of the microwave oven, a cooking function cannot be started if the microwave oven door has been closed for about 1 minute. The word “door” will appear in the display until the door is opened and closed.

Quick start/ Add 30 seconds

In standby mode, pressing START automatically starts the microwave oven at 100% power for 30 seconds and adds 30 seconds of cook time, with each additional touch of the control. Time may be added to any manual cooking cycle in 30 second increments, at the moment power level, by pressing START button during cooking.

NOTE:
- Quick Start 30sec: Press "Start/Add 30 sec", it will quick start of full power in 30sec; press again if you need to add more time mid cycle or at the end of the cycle
- Quick Minute Cooking: You can also press 1min to 6min (or adding-up) to have full power cooking of the selecting time, you can also use +/- to adjust the time
- Also you can input short cooking time by press and hold +/-, and then press "Start" with full power cooking

For example:
Set 00:45: press and hold '+' to reach 45sec
Set 01:20: Press 1min, press and hold or toggle '+' to reach 01:20
Set 02:30: Press 2min +30sec
Set 08:30: Press 4min + 4min +30sec

STOP/UNLOCK

The STOP/UNLOCK button clears any incorrect command and cancels any program during cooking. Press the STOP/UNLOCK button to stop the cycle. It will not erase the time of day.
The microwave oven will also turn off when the door is opened. Close the door and press START to resume the cycle.

To Use Non-Sensor Menu (Popcorn, Potato)

1. Place food on the turntable and close the door.
2. Touch desired menu control. The first programmed amount will appear in the display. Touch control keypad repeatedly or touch number keypads to change quantity.
3. Touch START. When the cycle ends, “End” will appear in the display and the end-of-cycle tone will sound.
4. Touch STOP/UNLOCK or open the door to clear the display.

Clock

The microwave oven must be in standby.
1. Press TIMER/Clock button for 3 seconds to enter clock setting. It will also appear every time the product is plugged into the power source, or power is back after a power fail.
2. Press +/- button to set the hour.
3. Press START button to confirm.
4. Press +/- button to set the minute.
5. Press START button to confirm the setting.

Timer

Kitchen Timer works like a stop watch.
To Set:
1. Press Timer/Clock button
2. Press +/- button to enter desired time.
3. Press START button. When the set time ends, the end-of-timer.
4. When the Timer countdown is achieve in the display, tone will sound. Press STOP/UNLOCK to stop the timer.

NOTE: The Timer does not start or stop the microwave oven. The function can be set only in Standby mode.

Mute On/Off

This function allows the user to activate/deactivate all the sounds played by the appliances, includes button press, warnings, alarm, even end audio feedback.
Press Steam Clean button and hold for 5 seconds to put into mute, hold the button again for 5 seconds to turn on the sound.

Cooking End

When the cooking is finished, the display will show the text “End”. A reminder acoustic beep will signal.
1. After the Cooking End, If you press the STOP/UNLOCK button, takes out the food and closes the door again, the interface will display the clock, it will switch to 1-step door opening.
2. If you will not remove the food within 30 minutes, it will consistently display "END" for 30 minutes, and automatically return to standby mode and unlock after 30 minutes and it will switch to 1-step door opening.

MICROWAVE OVEN USE

A magnetron in the microwave oven produces microwaves which reflect off the metal floor, walls, and ceiling and pass through the turntable and appropriate cookware to the food. Microwaves are attracted to and absorbed by fat, sugar, and water molecules in the food, causing them to move, producing friction and heat which cooks the food.

- To avoid damage to the microwave oven, do not lean on or allow children to swing on the microwave oven door.
- To avoid damage to the microwave oven, do not operate microwave oven when it is empty.
- Baby bottles and baby food jars should not be heated in microwave oven.
- Clothes, flowers, fruit, herbs, wood, gourds, and paper, including brown paper bags and newspaper, should not be dried in the microwave oven.
- Paraffin wax will not melt in the microwave oven because it does not absorb microwaves.
- Use oven mitts or pot holders when removing containers from microwave oven.
- Do not overcook potatoes. At the end of the recommended cook time, potatoes should be slightly firm. Let potatoes stand for 5 minutes. They will finish cooking while standing.
- Do not cook or reheat whole eggs inside the shell. Steam buildup in whole eggs may cause them to burst, requiring significant cleanup of microwave oven cavity. Cover poached eggs and allow a standing time.

Food Characteristics

When microwave cooking, the amount, size and shape, starting temperature, composition, and density of the food affect cooking results.

Amount of Food

The more food heated at once, the longer the cook time needed. Check for doneness and add small increments of time if necessary.

Size and Shape

Smaller pieces of food will cook more quickly than larger pieces, and uniformly shaped foods cook more evenly than irregularly shaped food.

Starting Temperature

Room temperature foods will heat faster than refrigerated foods, and refrigerated foods will heat faster than frozen foods.

Composition and Density

Foods high in fat and sugar will reach a higher temperature and will heat faster than other foods. Heavy, dense foods, such as meat and potatoes, require a longer cook time than the same size of a light, porous food, such as cake.

Cooking Guidelines

Covering

Covering food helps retain moisture, shorten cook time, and reduce spattering. Use the lid supplied with cookware. If a lid is not available, wax paper, paper towels, or plastic wrap approved for microwave ovens may be used. Plastic wrap should be turned back at one corner to provide an opening to vent steam. Condensation on the door and cavity surfaces is normal during heavy cooking.

Stirring and Turning

Stirring and turning redistribute heat evenly to avoid overcooking the outer edges of food. Stir from outside to center. If possible, turn food over from bottom to top.

Arranging

If heating irregularly shaped or different-sized foods, arrange the thinner parts and smaller-sized items toward the center. If cooking several items of the same size and shape, place them in a ring pattern, leaving the center of the ring empty.

Piercing

Before heating, use a fork or small knife to pierce or prick foods that have a skin or membrane, such as potatoes, egg yolks, chicken livers, hot dogs, and sausage. Prick in several places to allow steam to vent.

Shielding

Use small, flat pieces of aluminum foil to shield the thin pieces of irregularly shaped foods, bones and foods such as chicken wings, leg tips, and fish tails. See the “Aluminum Foil and Metal” section first.

Standing Time

Food will continue to cook by the natural conduction of heat even after the microwave cooking cycle ends. The length of standing time depends on the volume and density of the food.

Cookware and Dinnerware

Cookware and dinnerware must fit on the turntable. Always use oven mitts or pot holders when handling because any dish may become hot from heat transferred from the food. Do not use cookware and dinnerware with gold or silver trim. Use the following chart as a guide, then test before using.

Material	Recommendations
Aluminum Foil, Metal	See the “Aluminum Foil and Metal” section.
Browning Dish	Bottom must be at least 3/16" (5 mm) above the turntable. Follow manufacturer’s recommendations.
Ceramic Glass, Glass	Acceptable for use
China, Earthenware	Follow manufacturer’s recommendations.
Melamine	Follow manufacturer’s recommendations.
Paper: Towels, Dinnerware, Napkins	Use non-recycled and those approved by the manufacturer for microwave oven use.
Plastic: Wraps, Bags, Covers, Dinnerware, Containers	Use those approved by the manufacturer for microwave oven use.
Pottery and Clay	Follow manufacturer’s recommendations.
Silicone Bakeware	Follow manufacturer’s recommendations.
Straw, Wicker, Wooden Containers	Do not use in microwave oven.
Wax Paper	Acceptable for use

To Test Cookware or Dinnerware for Microwave Use:

1. Place cookware or dinnerware in microwave oven with 1 cup (250 mL) of water beside it.
2. Cook at 100% cooking power for 1 minute.

Do not use cookware or dinnerware if it becomes hot and the water stays cool.

Aluminum Foil and Metal

Always use oven mitts or pot holders when removing dishes from the microwave oven.

Aluminum foil and some metal can be used in the microwave oven. If not used properly, arcing (a blue flash of light) can occur and cause damage to the microwave oven.

OK for Use

Racks and bakeware supplied with the microwave oven (on some models), aluminum foil for shielding, and approved meat thermometers may be used with the following guidelines:

- To avoid damage to the microwave oven, do not allow aluminum foil or metal to touch the inside cavity walls, ceiling, or floor.
- Always use the turntable.
- To avoid damage to the microwave oven, do not allow contact with another metal object during microwave cooking.

Do Not Use

Metal cookware and bakeware, gold, silver, pewter, non-approved meat thermometers, skewers, twist ties, foil liners, such as sandwich wrappers, staples, and objects with gold or silver trim or a metallic glaze, should not be used in the microwave oven.

Cooking Menu

The micrwoave oven has been programmed with common microwave foods, their quantities, cook powers, and cook times.
Use the following chart as a guide for preset cooking.

Item	Food Category	Quantity
P1	**Fresh Vegetables** From room temperature. Place in microwave-safe container. Add 2 tablespoons water to 1-2 cups, add 4 tablespoons water to 3-4 cups. Cover the dish, leaving an air ventilation. Sir and let stand 3 min after cooking.	1 - 4 cups
P2	**Frozen Vegetables** From frozen temperature.Place in microwave-safe container Add 2 tablespoons water to 1-2 cups, add 4 tablespoons water to 3-4 cups. Cover the dish, leaving an air ventilation. Sir and let stand 3 min after cooking.	1 - 4 cups
P3	**Oatmeal** Place in microwave-safe container and add water depends on package directions adds water cover with plastic wrap and fold back one edge about ¼ inch (6 mm) to make a vent. Place container in the center of the oven. after cooking stir with spoon or whisk until uniform	1 - 4 cups
P4	**Frozen Entrée** Remove entrée from package and loosen film covering on 3 sides of the container leaving one of the short sides still attached. Loosely cover with film. Allow the 10.5 and 20 oz (297 and 567 g) entrees to stand 3 minutes. Allow the 38 and 60 oz (1.1 and 1.7 kg) entrees to stand 5 minutes	10oz, 20oz, 40oz, 60oz (283g, 567g, 1.1kg, 1.7kg)

Popcorn

3.0 or 3.5oz bags.
- Do not use regular paper bags or glassware
- Pop only one package of popcorn at a time.
- Follow manufacturer's instructions when using a microwave popcorn popper.
- Listen for popping to slow to one pop every 1 or 2 seconds, and then stop the cycle. Do not repop unpopped kernels.
- For best results, use fresh bags of popcorn.
- Cooking results may vary by brand and fat content.

NOTE:
Follow the instructions provided by the microwave popcorn manufacturer.

Potato

Item	Food Category	Quantity
L - Large Potato	Enter 1 - 4 pieces, 8-12 oz (227-340g) each. Pierce each potato several times with a fork. Plce on paper towel on turable centre. Let stand 5min after cooking.	1, 2, 3, 4 pieces / 1 piece
S - Small Potato	Enter 1 - 16 pieces, 3-5 oz (85-142g) each. Pierce each potato several times with a fork. Placed on paper towel on table centre. Leg stand 5min after cooking.	1 - 16 pieces / 1 piece

Dinner Plate (Reheat Menu)

Times and cooking powers have been preset for reheating a number of food types.
Use the following chart as a guide.

Item	Food Category	Quantity
P1	**Dinner plate** Place food on plate. Cover with plastic wrap and vent. Let stand 2-3 min after reheating.	Large((289-440g), Small
P2	**Soup** Place in microwave -safe container. Cover with plastic wrap and vent. Stir and let stand 2-3 min after reheating.	1, 2, 3, 4 cups
P3	**Beverage** Do not cover.	1, 2, 3, 4 cups
P4	**Reheat Pizza** Place on paper towel lined microwave-safe plate	1 - 3 sliced, 4 oz (113g) per slice

Soften Menu

Soften function may be used to soften your food. Times and cooking powers have been preset for a number of food types.
Use the following chart as a guide.

Item	Food Category	Quantity
P1	**Butter** Unwrap and place in microwave-safe container	0.5 - 2.0 sticks / 0.5 stick

Melt Menu

Melt function may be used to melt your food. Times and cooking powers have been preset for a number of food types.
Use the following chart as a guide.

Item	Food Category	Quantity
P1	**Butter** Unwrap and place in microwave-safe container	0.5 - 2.0 sticks / 0.5 stick
P2	**Chocolate Chips** Place in microwave-safe container	4 - 12 oz / 4 oz (113-340g / 113g)
P3	**Cream Cheese** Unwrap and place in microwave-safe container	8oz, 16oz (227g, 454g)

Auto Defrost

- For optimal result, food should be 0F (-18C) or colder when defrosting.
- Unwrap foods and remove lids (from fruit juice) before defrosting.
- Shallow packages will defrost more quickly than deep blocks.
- Separate food pieces as soon as possible during or at the end of the cycle for more even defrosting.
- Foods left outside the freezer for more than 20 min or frozen ready-made food should not be defrosted using the Defrost feature but should be defrosted manually.
- Use small pieces of aluminum foil to shield parts of food such as chicken wings, leg tips, and flish tails. See the 'Aluminum Foil and Metal' section frist.
- Times and cooking powers have been preset for defrosting a number of food types.

Item	Food Category	Weight
P1	Poultry	0.2 lbs - 6.6 lbs / 0.1 lbs
P2	Meat	0.2 lbs - 6.6 lbs / 0.1 lbs

Use the following chart as a guide when defrosting poultry, meat or fish

DEFROST PREPARATION CHART	
POULTRY	
Chicken: whole and cut up **Cornish hens** **Turkey:** breast	Place in a microwave safe container, chicken breast side up. Remove giblets from whole chicken.
MEAT	
Beef: ground, steaks, roast, stew **Lamb:** stew and chops **Pork:** chops, ribs, roasts, sausage	The narrow or fatty areas of irregular-shaped cuts shoudl be shielded with foil before defrosting. Do not defrost less than 1/4 lb (113g) or two 4 oz (113g) patities. Place all meats in a microwave-safe container.

Steam Clean

This automatic cleaning cycle will help you to to clean the microwave oven cavity and to remove unpleasant odors.

Before starting the cycle:

1. Put 250 mL water into a container (see our re commendationsin the below section “Tips and suggestions”).
2. Place the container directly on the middle of the cavity.

To Start The Cycle:

1. Press the Steam Clean button, the cleaning cycle duration willbe visible on the display.
2. Press the Start button to start the funcion.

When The Cycle Is Finished:

1. Press the Cancel button.
2. Remove the container.
3. Use a soft cloth or a paper towel with mild detergent to clean the interior surfaces.

Tips and suggestions:

For a better cleaning result, it is recommended to use a container with a diameter of 17-20 cm, and a height that is lowerthan 6.5 cm.
It is recommended to use a container of light plastic materialthatis suitable for the microwave.
As the container will be hot after the cleaning cycle is completed,it is recommended to use a heat resistant glove when removingthe container from the microwave.
For a better cleaning effect and removal of unpleasant odors, add some lemon juice or vinegar to the water.

Keep Warm

This function allows you to keep your dishes warm.
1. Press "Keep Warm" button
2. Press +/- button to select suitable time (15, 30, 45, 60min), then press START button to start. Default time is 30min, max. time is 60min

Food	Weight Container	Temperature	Container
Tuna Noodle Casserole	4 cups (880g)	165F (73.8C)	Microwave safe dish

MICROWAVE OVEN CARE

General Cleaning

IMPORTANT: Before cleaning, make sure all controls are off and the microwave oven is cool. Always follow label instructions on cleaning products.

Soap, water, and a soft cloth or sponge are suggested unless otherwise noted.

MICROWAVE OVEN CAVITY

To avoid damage to the microwave oven cavity, do not use soap-filled scouring pads, abrasive cleaners, steel-wool pads, gritty washcloths, or some recycled paper towels.

To avoid damage to stainless steel models, rub in direction of grain.

The area where the microwave oven door and frame touch when closed should be kept clean.

Average soil

- Mild, nonabrasive soaps and detergents:
  Rinse with clean water and dry with soft, lint-free cloth.

Heavy soil

- Mild, nonabrasive soaps and detergents:
  Heat 1 cup (250 mL) of water for 2 to 5 minutes in microwave oven. Steam will soften soil. Rinse with clean water and dry with soft, lint-free cloth.

Odors

- Lemon juice or vinegar:
  Heat 1 cup (250 mL) of water with 1 tbs (15 mL) of either lemon juice or vinegar for 2 to 5 minutes in microwave oven.

Microwave Inlet Cover

To avoid arcing and microwave oven damage, the microwave inlet cover (see the “Parts and Features” section) should be kept clean.

- Wipe with wet cloth.

MICROWAVE OVEN DOOR AND EXTERIOR

The area where the microwave oven door and frame touch when closed should be kept clean.

- Mild, nonabrasive soaps and detergents:
  Rinse with clean water and dry with soft, lint-free cloth.
- Glass cleaner and paper towels or nonabrasive plastic scrubbing pad:
  Apply glass cleaner to towel, not directly to surface.

Stainless Steel (on some models)

To avoid damage to microwave oven door and exterior, do not use soap-filled scouring pads, abrasive cleaners, steel-wool pads, gritty washcloths, or some paper towels. Rub in direction of grain.

- Stainless steel cleaner (not included):
  See the “Assistance or Service” section to order.
- Liquid detergent or all-purpose cleaner:
  Rinse with clean water and dry with soft, lint-free cloth.
- Vinegar for hard water spots

CONTROL PANEL

- Sponge or soft cloth and water:
  Dampen sponge with water and wipe panel. Dry with soft cloth.
- To avoid damage to the control panel, do not use chemical or abrasive cleansers.

TURNTABLE

Replace turntable immediately after cleaning. Do not operate the microwave oven without the turntable in place.

- Mild cleanser and scouring pad
- Dishwasher

TROUBLESHOOTING

First try the solutions suggested here. If you need further assistance or more recommendations that may help you avoid a service call, refer to the warranty or visit **http://www.whirlpool.com/product_help**. In Canada, visit **http://www.whirlpool.ca**.

Contact us by mail with any questions or concerns at the address below:

In the U.S.A.:

Whirlpool Brand Home Appliances
Customer eXperience Center
553 Benson Road
Benton Harbor, MI 49022-2692

In Canada:

Whirlpool Brand Home Appliances
Customer eXperience Center
200 – 6750 Century Ave.
Mississauga, Ontario L5N 0B7

Please include a daytime phone number in your correspondence.

If you experience	Recommended Solutions
Nothing will operate	**Check the following:** ■ **Household fuse or circuit breaker:** If a household fuse has blown or a circuit breaker has tripped, replace the fuse or reset the circuit breaker. If the problem continues, call an electrician.
Microwave oven will not operate	**Check the following:** ■ **Magnetron:** Try to heat 1 cup (250 mL) of cold water for 2 minutes at 100% cooking power. If water does not heat, try the steps in the bullets below. If microwave oven still does not operate, call for service. ■ **Door:** Firmly close door. On some models, if a packaging spacer is attached to the inside of the door, remove it, then firmly close door. If a message about the door appears in the display, the door has been closed for 5 minutes or more without the microwave oven being started. This occurs to avoid unintended starting of the microwave oven. Open and close the door, then start the cycle. ■ **Control:** Make sure control is set properly. Make sure Control Lock is OFF. Make sure Demo mode (on some models) is OFF.
Microwave oven makes humming noise	■ This is normal and occurs when the power supply in the magnetron cycles on.
Microwave oven door looks wavy	■ This is normal and will not affect performance.
Turntable will not operate	**Check the following:** ■ **Turntable:** Make sure turntable is correct-side up and is sitting securely on the turntable support. See the “Turntable” section. ■ **Turntable support:** Remove turntable. Remove and clean turntable hub, support, and rollers. Replace hub, support, and turntable. Place 1 cup (250 mL) of water on the turntable, then restart microwave oven. If it still is not working, call for service. See the “Warranty” section. Do not operate the microwave oven without turntable and turntable support working properly.
Turntable alternates rotation directions	■ This is normal and depends on motor rotation at the beginning of the cycle.
Display shows time countdown, but the microwave oven is not operating	**Check the following:** ■ **Timer:** See the “Timer” section.
Tones are not sounding	**Check the following:** ■ **Tones:** See the “Tones” section.
Cooking times seem too long	**Check the following:** ■ **Cooking power:** See the “Microwave Cooking Power” section. ■ **Amount of food:** Larger amounts of food need longer cooking times. ■ **Voltage:** Have a qualified electrician check the electrical system in the home.
Radio, TV, or cordless phone interference	**Check the following:** ■ **Proximity:** Move the receiver away from the microwave oven or adjust the radio or TV antenna. If the microwave oven is plugged into the same outlet, try a different outlet for the electronic device. ■ **Soil:** Make sure the microwave oven door and sealing surfaces are clean. ■ **Frequency:** Some 2.4 GHz-based cordless phones and home wireless networks may experience static or noise while microwave oven is on. Use a corded phone, a different frequency cordless phone, or avoid using these items during microwave oven operation.

ASSISTANCE OR SERVICE

If you need service:

Please refer to the warranty.

If you need replacement parts:

If you need to order replacement parts, we recommend that you use only factory specified parts. These factory specified parts will fit right and work right because they are made with the same precision used to build every new Whirlpool® appliance.

To locate factory specified parts in your area, call us or your nearest Whirlpool® designated service center.

In the U.S.A.

Call the Whirlpool Customer eXperience Center toll-free: **1-800-253-1301** or visit our website at **www.whirlpool.com**.

Our consultants provide assistance with:

- Scheduling of service. Whirlpool® appliances designated service technicians are trained to fulfill the product warranty and provide after-warranty service anywhere in the United States.
- Features and specifications on our full line of appliances.
- Referrals to local Whirlpool® appliance dealers.
- Installation information.
- Use and maintenance procedures.
- Accessory and repair parts sales.
- Specialized customer assistance (Spanish speaking, hearing impaired, limited vision, etc.).

For further assistance:

If you need further assistance, you can write to Whirlpool with any questions or concerns at:

Whirlpool Brand Home Appliances
Customer eXperience Center
553 Benson Road
Benton Harbor, MI 49022-2692

Please include a daytime phone number in your correspondence.

In Canada

Call the Whirlpool Customer eXperience Center toll-free: **1-800-807-6777** or visit our website at **www.whirlpool.ca**.

Our consultants provide assistance with:

- Scheduling of service. Whirlpool® appliances designated service technicians are trained to fulfill the product warranty and provide after-warranty service anywhere in Canada.
- Features and specifications on our full line of appliances.
- Referrals to local Whirlpool® appliance dealers.
- Use and maintenance procedures.
- Accessory and repair parts sales.

For further assistance:

If you need further assistance, you can write to Whirlpool with any questions or concerns at:

Customer eXperience Centre
Whirlpool Canada
200 - 6750 Century Ave.
Mississauga, Ontario L5N 0B7

Please include a daytime phone number in your correspondence.

Replacement Parts

Glass Turntable
Part Number W11664476

Turntable Support and Rollers
Part Number W11664467

Turntable Hub
Part Number W11664468

WHIRLPOOL® MAJOR APPLIANCE LIMITED WARRANTY

ATTACH YOUR RECEIPT HERE. PROOF OF PURCHASE IS REQUIRED TO OBTAIN WARRANTY SERVICE.

Please have the following information available when you call the Customer eXperience Center:

- Name, address, and telephone number
- Model number and serial number
- A clear, detailed description of the problem
- Proof of purchase, including dealer or retailer name and address

IF YOU NEED SERVICE:

1. Before contacting us to arrange service, please determine whether your product requires repair. Some questions can be addressed without service. Please take a few minutes to review the Troubleshooting section of the Use and Care Guide or visit producthelp.whirlpool.com.
2. All warranty service is provided exclusively by our authorized Whirlpool Service Providers. In the U.S. and Canada, direct all requests for warranty service to:

Whirlpool Customer eXperience Center

In the U.S.A., call 1-800-253-1301. In Canada, call 1-800-807-6777.

If outside the 50 United States or Canada, contact your authorized Whirlpool dealer to determine whether another warranty applies.

ONE YEAR LIMITED WARRANTY

WHAT IS COVERED

For one year from the date of purchase, when this major appliance is installed, operated, and maintained according to instructions attached to or furnished with the product, Whirlpool Corporation or Whirlpool Canada LP (hereafter "Whirlpool") will pay for factory specified replacement parts and repair labor to correct defects in materials or workmanship that existed when this major appliance was purchased or, at its sole discretion, replace the product. In the event of product replacement, your appliance will be warranted for the remaining term of the original unit's warranty period.

YOUR SOLE AND EXCLUSIVE REMEDY UNDER THIS LIMITED WARRANTY SHALL BE PRODUCT REPAIR AS PROVIDED HEREIN. Service must be provided by a Whirlpool designated service company. This limited warranty is valid only in the United States or Canada and applies only when the major appliance is used in the country in which it was purchased. This limited warranty is effective from the date of original consumer purchase. Proof of original purchase date is required to obtain service under this limited warranty.

WHAT IS NOT COVERED

1. Commercial, non-residential, multiple-family use, or use inconsistent with published user, operator, or installation instructions.
2. In-home instruction on how to use your product.
3. Service to correct improper product maintenance or installation, installation not in accordance with electrical or plumbing codes, or correction of household electrical or plumbing (e.g., house wiring, fuses, or water inlet hoses).
4. Consumable parts (e.g., light bulbs, batteries, air or water filters, preservation solutions).
5. Defects or damage caused by the use of non-genuine Whirlpool parts or accessories.
6. Conversion of products from natural gas or propane gas.
7. Damage from accident, misuse, abuse, fire, floods, acts of God, or use with products not approved by Whirlpool.
8. Repairs to parts or systems to correct product damage or defects caused by unauthorized service, alteration, or modification of the appliance.
9. Cosmetic damage including scratches, dents, chips, and other damage to the appliance finishes, unless such damage results from defects in materials and workmanship and is reported to Whirlpool within 30 days.
10. Discoloration, rust, or oxidation of surfaces resulting from caustic or corrosive environments including, but not limited to, high salt concentrations, high moisture or humidity, or exposure to chemicals.
11. Food or medicine loss due to product failure.
12. Pickup or delivery. This product is intended for in-home repair.
13. Travel or transportation expenses for service in remote locations where an authorized Whirlpool servicer is not available.
14. Removal or reinstallation of inaccessible appliances or built-in fixtures (e.g., trim, decorative panels, flooring, cabinetry, islands, countertops, drywall) that interfere with servicing, removal, or replacement of the product.
15. Service or parts for appliances with original model/serial numbers removed, altered, or not easily determined.

The cost of repair or replacement under these excluded circumstances shall be borne by the customer.

DISCLAIMER OF IMPLIED WARRANTIES

IMPLIED WARRANTIES, INCLUDING ANY IMPLIED WARRANTY OF MERCHANTABILITY OR IMPLIED WARRANTY OF FITNESS FOR A PARTICULAR PURPOSE, ARE LIMITED TO ONE YEAR OR THE SHORTEST PERIOD ALLOWED BY LAW. Some states and provinces do not allow limitations on the duration of implied warranties of merchantability or fitness, so this limitation may not apply to you. This warranty gives you specific legal rights, and you also may have other rights that vary from state to state or province to province.

DISCLAIMER OF REPRESENTATIONS OUTSIDE OF WARRANTY

Whirlpool makes no representations about the quality, durability, or need for service or repair of this major appliance other than the representations contained in this warranty. If you want a longer or more comprehensive warranty than the limited warranty that comes with this major appliance, you should ask Whirlpool or your retailer about buying an extended warranty.

LIMITATION OF REMEDIES: EXCLUSION OF INCIDENTAL AND CONSEQUENTIAL DAMAGES

YOUR SOLE AND EXCLUSIVE REMEDY UNDER THIS LIMITED WARRANTY SHALL BE PRODUCT REPAIR AS PROVIDED HEREIN. WHIRLPOOL SHALL NOT BE LIABLE FOR INCIDENTAL OR CONSEQUENTIAL DAMAGES. Some states and provinces do not allow the exclusion or limitation of incidental or consequential damages, so these limitations and exclusions may not apply to you. This warranty gives you specific legal rights, and you also may have other rights that vary from state to state or province to province.

03/17