Global Knowledge Services

SURFboard® SBG6950AC2 Wireless Gateway

User Guide

January 2017

Copyright 2017 ARRIS Enterprises, LLC. All rights reserved.

ARRIS Copyrights and Trademarks

© 2017 ARRIS Enterprises, LLC. All rights reserved.

No part of this publication may be reproduced in any form or by any means or used to make any derivative work (such as translation, transformation, or adaptation) without written permission from ARRIS Enterprises, LLC ("ARRIS"). ARRIS reserves the right to revise this publication and to make changes in content from time to time without obligation on the part of ARRIS to provide notification of such revision or change.

ARRIS, SURFboard, and the ARRIS logo are all trademarks of ARRIS Enterprises, LLC. Other trademarks and trade names may be used in this document to refer to either the entities claiming the marks or the names of their products. ARRIS disclaims proprietary interest in the marks and names of others.

Wi-Fi Alliance®, Wi-Fi®, the Wi-Fi logo, the Wi-Fi CERTIFIED logo, Wi-Fi Protected Access® (WPA), the Wi-Fi Protected Setup logo, and WMM® are registered trademarks of Wi-Fi Alliance. Wi-Fi Protected Setup™, Wi-Fi Multimedia™, and WPA2™ are trademarks of Wi-Fi Alliance.

ARRIS provides this guide without warranty of any kind, implied or expressed, including, but not limited to, the implied warranties of merchantability and fitness for a particular purpose. ARRIS may make improvements or changes in the product(s) described in this manual at any time.

The capabilities, system requirements and/or compatibility with third-party products described herein are subject to change without notice.

Table of Contents

1. **Safety and Regulatory Information 4**
   - Important Safety Instructions 4
   - FCC Statements 6
   - Wireless LAN Information 7
   - CARING FOR THE ENVIRONMENT BY RECYCLING YOUR ARRIS EQUIPMENT 8
2. **Getting Started 9**
   - Introduction 9
     - In The Box 9
   - System Requirements 10
   - Contact Information 11
3. **Product Overview 12**
   - Front Panel 12
     - Wi-Fi Protected Setup™ (WPS) 13
   - Rear Panel 14
   - Gateway Label 16
4. **Installing the Gateway 17**
   - Connect the SBG6950AC2 to Your Computer 17
   - Establish an Internet Connection 18
5. **Warranty Information 20**

Copyright 2017, ARRIS Enterprises, LLC. All rights reserved.

Safety and Regulatory Information

Important Safety Instructions

Read This Before You Begin — When using your equipment, basic safety precautions should always be followed to reduce the risk of fire, electric shock, and injury to persons, including the following:

- Read all of the instructions listed here and/or in the user manual before you operate this device. Give particular attention to all safety precautions. Retain the instructions for future reference.
- This device must be installed and used in strict accordance with manufacturer's instructions, as described in the user documentation that is included with the device.
- Comply with all warning and caution statements in the instructions. Observe all warning and caution symbols that are affixed to this device.
- To prevent fire or shock hazard, do not expose this device to rain or moisture. The device must not be exposed to dripping or splashing. Do not place objects filled with liquids, such as vases, on the device.
- This device was qualified under test conditions that included the use of the supplied cables between system components. To ensure regulatory and safety compliance, use only the provided power and interface cables and install them properly.
- Different types of cord sets may be used for connections to the main POWER supply circuit. Use only a main line cord that complies with all applicable device safety requirements of the country of use.
- Installation of this device must be in accordance with national wiring codes and conform to local regulations.
- Operate this device only from the type of power source indicated on the device's marking label. If you are not sure of the type of power supplied to your home, consult your dealer or local power company.
- Do not overload outlets or extension cords, as this can result in a risk of fire or electric shock. Overloaded AC outlets, extension cords, frayed power cords, damaged or cracked wire insulation, and broken plugs are dangerous. They may result in a shock or fire hazard.
- Route power supply cords so that they are not likely to be walked on or pinched by items placed upon or against them. Pay particular attention to cords where they are attached to plugs and convenience receptacles, and examine the point where they exit from the device.

Copyright 2017, ARRIS Enterprises, LLC. All rights reserved.

- Place this device in a location that is close enough to an electrical outlet to accommodate the length of the power cord.
- Place the device to allow for easy access when disconnecting the power cord of the device from the AC wall outlet.
- Do not connect the plug into an extension cord, receptacle, or other outlet unless the plug can be fully inserted with no part of the blades exposed.
- Place this device on a stable surface.
- Avoid damaging the device with static by touching the coaxial cable when it is attached to the earth-grounded coaxial cable-TV wall outlet.
- Always first touch the coaxial cable connector on the device when disconnecting or reconnecting the Ethernet cable from the device or user's PC.
- Installation of an AC surge protector in the AC outlet to which this device is connected is recommended. This is to avoid damaging the device by local lightning strikes and other electrical surges.
- Postpone installation until there is no risk of thunderstorm or lightning activity in the area.
- Avoid using a telephone (other than a cordless type) during an electrical storm. There is a remote risk of electric shock from lightning. For added protection, unplug the device from the wall outlet and disconnect the cables to avoid damage to this device from lightning and power surges.
- Do not use this product near water. For example, near a bathtub, washbowl, kitchen sink, laundry tub, swimming pool, or in a wet basement.
- Do not use the telephone to report a gas leak in the vicinity of the leak.
- Do not cover the device or block the airflow to the device with any other objects. Keep the device away from excessive heat and humidity and keep the device free from vibration and dust.
- Wipe the device with a clean, dry cloth. Never use cleaning fluid or similar chemicals. Do not spray cleaners directly on the device or use forced air to remove dust.
- For added protection, unplug the device from the wall outlet and disconnect the cables to avoid damage to this device during lightning activity or power surges.

  CAUTION: To reduce the risk of fire, use only No. 26 AWG or larger (e.g., 24 AWG) UL Listed or CSA Certified Telecommunication Line Cord, or national equivalent.
- Upon completion of any service or repairs to this device, ask the service technician to perform safety checks to determine that the device is in safe operating condition.
- Do not open the device. Do not perform any servicing other than that contained in the installation and troubleshooting instructions. Refer all servicing to qualified service personnel.
- This device should not be used in an environment that exceeds 104° F (40° C).

SAVE THESE INSTRUCTIONS

Copyright 2017, ARRIS Enterprises, LLC. All rights reserved.

Note to CATV System Installer — This reminder is provided to call the CATV system installer's attention to Section 820.93 of the National Electric Code, which provides guidelines for proper grounding and, in particular, specifies that the Coaxial cable shield must be connected to the grounding system of the building, as close to the point of cable entry as practical.

FCC Statements

FCC Interference Statement

This equipment has been tested and found to comply with the limits for a Class B digital device, pursuant to part 15 of the FCC Rules. These limits are designed to provide reasonable protection against harmful interference in a residential environment. This equipment generates, uses, and can radiate radio frequency energy and, if not installed and used in accordance with the instructions, may cause harmful interference to radio communications. However, there is no guarantee that interference will not occur in a particular installation. If this equipment does cause harmful interference to radio or television reception, which can be determined by turning the device off and on, the user is encouraged to try to correct the interference by one or more of the following measures:

- Reorient or relocate the receiving antenna.
- Increase the separation between the device and receiver.
- Connect the equipment into an outlet on a circuit different from that to which the receiver is connected.
- Consult the dealer or an experienced radio/TV technician for help.

This device complies with Part 15 of the FCC Rules. Operation is subject to the following two conditions: (1) This device may not cause harmful interference, and (2) This device must accept any interference received, including interference that may cause undesired operation.

FCC Caution: Any changes or modifications not expressly approved by ARRIS could void the user's authority to operate the equipment.

FCC Declaration of Conformity

ARRIS Enterprises, LLC, 3871 Lakefield Drive, Suwanee, GA 30024, declares that the SURFboard DOCSIS 3.0 Wireless Gateway-SBG6950AC2 complies with 47 CFR Parts 2 and 15 of the FCC rules as a Class B digital device.

FCC Radiation Exposure Statement

This equipment complies with FCC radiation exposure limits set forth for an uncontrolled environment. To comply with the FCC RF exposure compliance requirements, the separation distance between the antenna and any person's body (including hands, wrists, feet and ankles) must be at least 8 inches (20 centimeters).

This transmitter must not be co-located or operating in conjunction with any other antenna or transmitter except those already approved in this filing.

Copyright 2017, ARRIS Enterprises, LLC. All rights reserved.

The availability of some specific channels and/or operational frequency bands are country dependent and are firmware programmed at the factory to match the intended destinations. The firmware setting is not accessible by the end user.

Wireless LAN Information

***Note**: This applies to devices that provide Wi-Fi capability.*

This device is a wireless network product that uses Direct Sequence Spread Spectrum (DSSS) and Orthogonal Frequency-Division Multiple Access (OFDMA) radio technologies. The device is designed to be interoperable with any other wireless DSSS and OFDMA products that comply with:

- The IEEE 802.11 Standard on Wireless LANs (Revision AC, Revision B, Revision G, and Revision N), as defined and approved by the Institute of Electrical Electronics Engineers
- The Wireless Fidelity (Wi-Fi) certification as defined by the Wireless Ethernet Compatibility Alliance (WECA).

Restrictions on the Use of Wireless Devices

In some situations or environments, the use of wireless devices may be restricted by the proprietor of the building or responsible representatives of the organization. For example, using wireless equipment in any environment where the risk of interference to other devices or services is perceived or identified as harmful.

If you are uncertain of the applicable policy for the use of wireless equipment in a specific organization or environment, you are encouraged to ask for authorization to use the device prior to turning on the equipment.

The manufacturer is not responsible for any radio or television interference caused by unauthorized modification of the devices included with this product, or the substitution or attachment of connecting cables and equipment other than specified by the manufacturer. Correction of the interference caused by such unauthorized modification, substitution, or attachment is the responsibility of the user.

The manufacturer and its authorized resellers or distributors are not liable for any damage or violation of government regulations that may arise from failing to comply with these guidelines.

***Note**: The use of the 5150-5250 MHz frequency band is restricted to Indoor Use Only.*

Copyright 2017, ARRIS Enterprises, LLC. All rights reserved.

Security Warning: This device allows you to create a wireless network. Wireless network connections may be accessible by unauthorized users. For more information on how to protect your network, see *Protecting & Monitoring Your Wireless Network* (page *42*) in this guide for more information or visit the ARRIS Support website at www.arris.com/consumers.

CARING FOR THE ENVIRONMENT BY RECYCLING YOUR ARRIS EQUIPMENT

Please do not dispose of this product or any included electronic accessories, i.e., power supply or battery, with your residential or commercial waste. ARRIS devices may be disposed of through the ARRIS Product Recycling program, further described at corporateresponsibility.arris.com/phoenix.zhtml. You may also contact your local community authorities for information regarding where you may dispose of your ARRIS devices.

For your convenience, batteries are also accepted at no charge for recycling at various locations. Please visit **www.call2recycle.org** or call **1-877-2-RECYCLE** (**1-877-273-2925**) for a battery recycling location near you.

Copyright 2017, ARRIS Enterprises, LLC. All rights reserved.

Getting Started

Introduction

Welcome to the next generation of ultra high-speed wireless gateways. The ARRIS SURFboard® SBG6950AC2 is a combination DOCSIS 3.0® cable modem and four-port Ethernet router with Wi-Fi. It uses DOCSIS 3.0 technology to provide ultra high-speed Internet access on your home network. Using the connection capabilities of the gateway, you can connect your computer and other devices via the four Ethernet ports or the two different Wireless connections. The SBG6950AC2 connects to the existing coaxial cable connection in your home. The SBG6950AC2 also includes a Wi-Fi® Pairing (WPS) button option for quick and easy connections for your WPS-enabled wireless devices.

This guide provides instructions for installing and configuring your SBG6950AC2, setting up secure wireless network connections, and managing your gateway and network configurations.

In The Box

Before installing the SBG6950AC2, check that the following items are also included in the box. If any items are missing, please call ARRIS Technical Support at **1-877-466-8646** for assistance.

Table 1. SBG6950AC2 Package Contents

Item		Description
SBG6950AC2 Wireless Gateway		High-speed DOCSIS 3.0 cable modem, wireless access point, and four-port Ethernet router Updated graphic will be added in the next document draft.
Power Cord		Power cord for an electrical wall outlet connection
Ethernet Cable		Standard Category 5 (CAT5e) or higher network cable

Copyright 2017, ARRIS Enterprises, LLC. All rights reserved.

Item		Description
Software License & Regulatory Card		Contains safety and regulatory information, software license, and warranty for the gateway.
Support Information Card		Provides contact information for obtaining technical support assistance with any issues you may have with your SURFboard device.
SBG6950AC2 Quick Start Guide		Provides basic information for installing the gateway and setting up a secure wireless connection on your home network. **Updated graphic will be added in the next document draft.**

Additional Items Needed (Not Included)

The following items are not included in the box and must be purchased separately, if required:

- Coaxial (coax) cable, if one is not already connected to a cable wall outlet
- RF splitter (for additional coaxial cable connections, such as a set-top box or Smart TV)
- Ethernet cable for each additional Ethernet-enabled device

System Requirements

- High-speed Internet access account
- Web browser access – Internet Explorer, Google Chrome, Firefox, or Safari
- Compatible operating systems:
  - Windows®10
  - Windows 8
  - Windows 7 Service Pack 1 (SP1)

***Note**: Although older versions of Microsoft Windows operating systems are no longer specifically supported, they should still function with this model.*

  - Mac® 10.4 or higher
  - UNIX®
  - Linux®

Copyright 2017, ARRIS Enterprises, LLC. All rights reserved.

Contact Information

For technical support and additional ARRIS product information:

- Visit the ARRIS Support website: www.arris.com/consumers (*http://www.arris.com/consumers*)
- Call ARRIS Technical Support: **1-877-466-8646**

DRAFT

Copyright 2017, ARRIS Enterprises, LLC. All rights reserved.

Product Overview

Front Panel

Updated graphic will be added in the next document draft.

Figure 1: SBG6950AC2 Front View

Table 2. SBG6950AC2 Front Panel LED Icons

LED Icon	Blinking	On (Solid)
POWER	Not applicable – icon does not blink.	**Green**: Power is properly connected.
US/DS	Scanning for an upstream (send) or downstream (receive) channel connection.	**Green**: Non-bonded upstream or downstream channel is connected. **Blue***: High-speed Internet connection with bonded upstream or downstream channel
ONLINE	Scanning for an Internet connection.	**Green**: Gateway is connected to the network.

Copyright 2017, ARRIS Enterprises, LLC. All rights reserved.

LED Icon	Blinking	On (Solid)
WIRELESS	**Green**: Wi-Fi enabled with encrypted/unencrypted wireless data activity. **Amber**: WPS Pairing process is underway between the SBG6950AC2 and a WPS-enabled wireless device.	**Green**: Any of the following applies: 2.4 GHz wireless connection is made between the SBG6950AC2 and another Wi-Fi enabled wireless device on your home network; for example, Wi-Fi telephone, tablet, or laptop. The WPS Pairing process between the SBG6950AC2 and WPS-enabled wireless device was successful. The WPS Pairing process either failed or did not complete after two minutes.
WIRELESS	**Green**: Wi-Fi enabled with encrypted/unencrypted wireless data activity. **Amber**: WPS Pairing process is underway between the SBG6950AC2 and a WPS-enabled wireless device.	**Green**: Any of the following applies: 5 GHz wireless connection is made between the SBG6950AC2 and another Wi-Fi enabled wireless device on your home network; for example, Wi-Fi telephone, tablet, or laptop. The WPS Pairing process between the SBG6950AC2 and WPS-enabled wireless device was successful. The WPS Pairing process either failed or did not complete after two minutes.
WPS Button	Not applicable – no LED on button. ***Note**: The **Wireless** LEDs will blink **Amber** to indicate the WPS Pairing process is in progress.*	Not applicable – no LED on button.
USB	Not applicable – no LED on port.	Not applicable – no LED on port.

Blue*: Indicates DOCSIS 3.0 operation (high-speed Internet access) which may not be available in all locations. Check with your service provider for availability in your area.

Wi-Fi Protected Setup™ (WPS)

Wi-Fi Protected Setup (WPS) is a wireless network setup option that provides a quick and easy solution for setting up a secure wireless network connection for any WPS-enabled wireless device; such as a computer, tablet, gaming device, or printer. WPS automatically configures your wireless network connections and sets up wireless security.

Copyright 2017, ARRIS Enterprises, LLC. All rights reserved.

Rear Panel

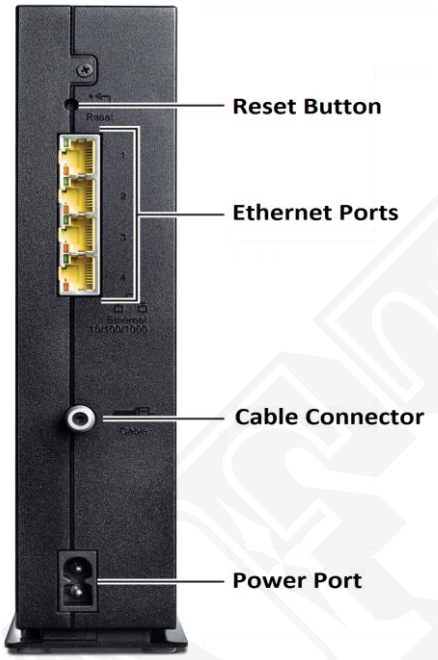

Figure 2: SBG6950AC2 Rear View

Table 3. SBG6950AC2 Rear Panel Ports & Connectors

Port Name	Description
Reset Button	Recessed button located on the back of your SBG6950AC2 can be used to either reboot your gateway or reset your gateway configuration settings. To reboot (or restart) your SBG6950AC2: 1. Insert the end of a paper clip or other small object with a narrow tip into the **Reset** opening on the back of your SBG6950AC2. 2. Press and hold the indented **Reset** button for three to four seconds only. 3. Remove the paper clip or small object from the **Reset** opening. To reset your SBG6950AC2 configuration back to the factory default settings: 1. Insert the end of a paper clip or other small object with a narrow tip into the **Reset** opening on the back of your SBG6950AC2. 2. Press and hold the **Reset** button for 10 seconds or until the front panel LEDs flash. 3. Remove the paper clip or small object from the **Reset** opening.

Copyright 2017, ARRIS Enterprises, LLC. All rights reserved.

Port Name	Description
Reset Button (Continued)	See *Reset the SBG6950AC2 Configuration Settings* for more information on resetting your gateway configuration settings using the SBG6950AC2 Web Manager. **WARNING!** Resetting the gateway configuration settings to the factory defaults will also delete your custom gateway configuration, including your user password, wireless network name (SSID), and other configuration settings. You should first back up your gateway configuration files before resetting your gateway.
ETHERNET 10/100/1000	Four one-gigabit Ethernet ports for RJ-45 network cable connections: ■ **Green**: LED is ON - Indicates a data transfer rate of one gigabit per second ■ **Green**: LED is Blinking - Indicates data traffic is in progress ■ **Amber**: LED is ON - Indicates a data transfer rate of less than one gigabit per second ■ **Amber**: LED is Blinking - Indicates data traffic is in progress
CABLE	Coaxial cable connector
Power Port	100 - 240 VAC Power connector **WARNING!** To avoid any damage to your SBG6950AC2, only use the power cord provided in the box.

Copyright 2017, ARRIS Enterprises, LLC. All rights reserved.

Gateway Label

Updated graphic will be added in the next document draft.

Figure 3: Sample SBG6950AC2 Gateway Label

The gateway label is located on the bottom of the SBG6950AC2. It contains the gateway information that you may need when contacting your service provider or *ARRIS Technical Support* (page *13*).

To receive Internet service, contact your service provider for assistance. You may need to provide the following information listed on the gateway label:

- Gateway Model name (**SBG6950AC2**)
- Gateway MAC address (**HFC MAC**)
- Gateway Serial number (**SN**)

Copyright 2017, ARRIS Enterprises, LLC. All rights reserved.

Installing the Gateway

Caution: This product is for indoor use only. Do not route the Ethernet cable(s) outside of the building. Exposure of the cables to lightning could create a safety hazard and damage the product.

Connect the SBG6950AC2 to Your Computer

Before installing your SBG6950AC2:

- Check with your service provider (or local cable company) to ensure broadband cable service is available in your area.

  To set up a wireless network, you will need a high-speed Internet connection provided by an Internet service provider.

  ***Note**: When contacting your service provider, you may need your gateway information listed on the gateway label located on the bottom of your SBG6950AC2, see Gateway Label (page 17).*

- Choose a location in your home where your computer and gateway are preferably near existing cable and electrical wall outlets.

  For the best Wi-Fi coverage, a central location in your home or building is recommended.

  ***Note**: The following installation procedure covers the wired Ethernet connection process so that you can confirm that the SBG6950AC2 was properly installed and can connect to the Internet.*

Copyright 2017, ARRIS Enterprises, LLC. All rights reserved.

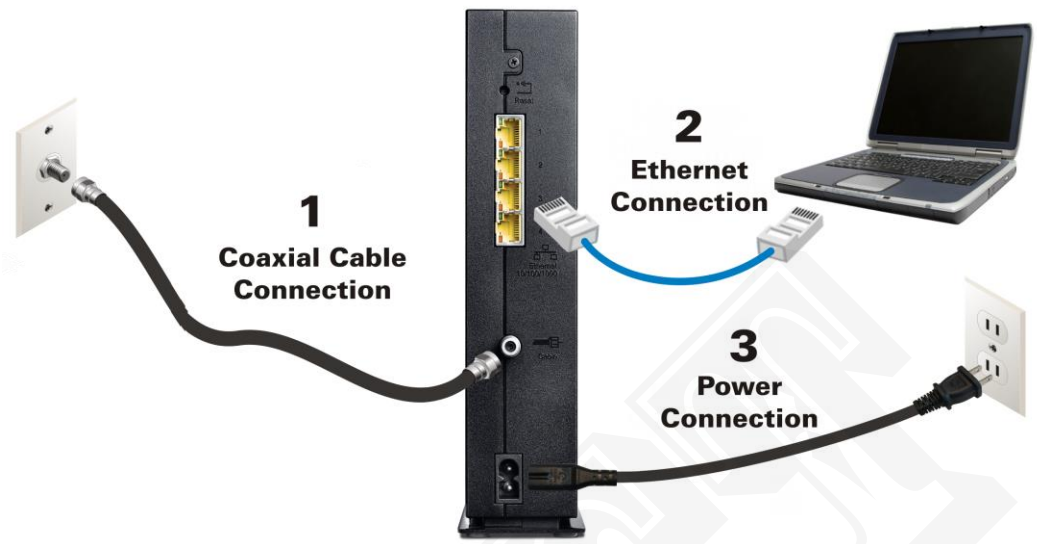

Figure 4: SBG6950AC2 Connection Diagram

1. Check that a coaxial cable is already connected to a cable wall outlet or RF splitter (not included).
2. Connect the other end of the coaxial cable to the **Cable** connector on the rear of the SBG6950AC2.

   Use your hand to tighten the connectors to avoid damaging them.
3. Connect the Ethernet cable to an available **Ethernet** port on the rear of the SBG6950AC2.
4. Connect the other end of the Ethernet cable to the **Ethernet** port on your computer.

   Optional: Repeat steps 3 and 4 for an additional computer or other network device that you want to install as a wired connection on your home network.
5. Connect the power cord to the **Power** port on the rear of the SBG6950AC2.
6. Plug the other end of the power cord into an electrical wall outlet that is not controlled by a wall switch.

***Note**: This automatically powers ON the SBG6950AC2. There may be up to a 15 second delay for the **Power** LED on the SBG6950AC2 front panel to light up after the power is connected.*

Establish an Internet Connection

Although your computer may already be configured to automatically access the Internet, you should still perform the following gateway connectivity test to verify that the devices were connected properly.

2. Power ON the computer connected to the SBG6950AC2 if it is turned off, and then log in.
3. Contact your service provider to activate (provision) the SBG6950AC2. You may have to provide the **HFC MAC ID** listed on the gateway label.

Copyright 2017, ARRIS Enterprises, LLC. All rights reserved.

***Note**: Your service provider may allow for automatic activation, which will automatically launch their own special website on your computer when you open a web browser.*

4. After the SBG6950AC2 is provisioned (or activated), open a web browser (such as Internet Explorer, Google Chrome, Firefox, or Safari) on your computer.
5. Type a valid URL (such as *www.surfboard.com*) in the address bar and then press **`Enter`**.

   The ARRIS website should open. If the website fails to open, please contact your service provider for assistance.
6. Check that the **Power, Upstream/Downstream**, and **Online** front panel LEDs on the SBG6950AC2 light up in sequential order. See *Front Panel* (page *13*) for additional LED status information.
   - If all four LEDs did not light up solid and you also do not have an Internet connection, you may have to contact your service provider to reactivate the SBG6950AC2 or check for signal issues.
   - If you still cannot connect to the Internet, the SBG6950AC2 may be defective. Please call ARRIS Technical Support at **1-877-466-8646** for assistance.

Copyright 2017, ARRIS Enterprises, LLC. All rights reserved.

Warranty Information

SURFboard SBG6950AC2 Wireless Gateway

ARRIS Enterprises, LLC ("ARRIS")

Retail Purchasers: If you purchased this Product directly from ARRIS or from an authorized ARRIS retail reseller, ARRIS warrants to you, the original end user customer, that (A) the Product, excluding Software, will be free from defects in materials and workmanship under normal use, and (B) with respect to Software, (i) the media on which the Software is provided will be free from defects in material and workmanship under normal use, and (ii) the Software will perform substantially as described in its documentation. This Limited Warranty to you, the original end user customer, continues (A) for Software and the media upon which it is provided, for a period of ninety (90) days from the date of purchase from ARRIS or an authorized ARRIS reseller, and (B) for the Product (excluding Software), for a period of two (2) years from the date of purchase from ARRIS or from an authorized ARRIS reseller. To take advantage of this Limited Warranty or to obtain technical support, you must call the ARRIS toll-free telephone number **1-877-466-8646**. Technical support charges may apply. ARRIS' sole and exclusive obligation under this Limited Warranty for retail sales shall be to repair or replace any Product or Software that does not meet this Limited Warranty. All warranty claims must be made within the applicable Warranty Period.

Cable Operator or Service Provider Arrangements. If you did not purchase this Product directly from ARRIS or from an ARRIS authorized retail reseller, ARRIS does not warrant this Product to you, the end-user. A limited warranty for this Product (including Software) may have been provided to your cable operator or Internet Service Provider ("Service Provider") from whom you obtained the Product. Please contact your Service Provider if you experience problems with this Product.

General Information. The warranties described in this Section shall not apply: (i) to any Product subjected to accident, misuse, neglect, alteration, Acts of God, improper handling, improper transport, improper storage, improper use or application, improper installation, improper testing or unauthorized repair; or (ii) to cosmetic problems or defects which result from normal wear and tear under ordinary use, and do not affect the performance or use of the Product. ARRIS' warranties apply only to a Product that is manufactured by ARRIS and identified by ARRIS owned trademark, trade name or product identification logos affixed to the Product. ARRIS does not warrant to you, the end user, or to anyone else that the Software will perform error free or without bugs.

Copyright 2017, ARRIS Enterprises, LLC. All rights reserved.

ARRIS IS NOT RESPONSIBLE FOR, AND PROVIDES "AS IS" ANY SOFTWARE SUPPLIED BY 3RD PARTIES. EXCEPT AS EXPRESSLY STATED IN THIS SECTION ("WARRANTY INFORMATION"), THERE ARE NO WARRANTIES OF ANY KIND RELATING TO THE PRODUCT, EXPRESS, IMPLIED OR STATUTORY, INCLUDING BUT NOT LIMITED TO IMPLIED WARRANTIES OF MERCHANTABILITY, FITNESS FOR A PARTICULAR PURPOSE, OR THE WARRANTY AGAINST INFRINGEMENT PROVIDED IN THE UNIFORM COMMERCIAL CODE. Some states do not allow for the exclusion of implied warranties, so the above exclusion may not apply to you.

What additional provisions should I be aware of? Because it is impossible for ARRIS to know the purposes for which you acquired this Product or the uses to which you will put this Product, you assume full responsibility for the selection of the Product for its installation and use. While every reasonable effort has been made to insure that you will receive a Product that you can use and enjoy, ARRIS does not warrant that the functions of the Product will meet your requirements or that the operation of the Product will be uninterrupted or error-free.

ARRIS IS NOT RESPONSIBLE FOR PROBLEMS OR DAMAGE CAUSED BY THE INTERACTION OF THE PRODUCT WITH ANY OTHER SOFTWARE OR HARDWARE. ALL WARRANTIES ARE VOID IF THE PRODUCT IS OPENED, ALTERED, AND/OR DAMAGED.

THESE ARE YOUR SOLE AND EXCLUSIVE REMEDIES for any and all claims that you may have arising out of or in connection with this Product, whether made or suffered by you or another person and whether based in contract or tort.

IN NO EVENT SHALL ARRIS BE LIABLE TO YOU OR ANY OTHER PARTY FOR ANY DIRECT, INDIRECT, GENERAL, SPECIAL, INCIDENTAL, CONSEQUENTIAL, EXEMPLARY OR OTHER DAMAGES ARISING OUT OF THE USE OR INABILITY TO USE THE PRODUCT (INCLUDING, WITHOUT LIMITATION, DAMAGES FOR LOSS OF BUSINESS PROFITS, BUSINESS INTERRUPTION, LOSS OF INFORMATION OR ANY OTHER PECUNIARY LOSS), OR FROM ANY BREACH OF WARRANTY, EVEN IF ARRIS HAS BEEN ADVISED OF THE POSSIBILITY OF SUCH DAMAGES. IN NO CASE SHALL ARRIS' LIABILITY EXCEED THE AMOUNT YOU PAID FOR THE PRODUCT.

These matters are governed by the laws of the State of Georgia of the United States of America, without regard to conflict of laws principles and excluding the provisions of the United Nations Convention on Contracts for the International Sale of Goods and the Uniform Computers Information Transactions Act.

Retail Purchasers Only. If you purchased this Product directly from ARRIS or from an ARRIS authorized retail reseller, please call the ARRIS toll-free phone number, **1-877-466-8646** for warranty service or technical support. Technical support charges may apply. For online technical support, please visit www.arris.com/consumer.

Cable Operator or Service Provider Arrangements. If you did not purchase this Product directly from ARRIS or from an ARRIS authorized retail reseller, please contact your Service Provider for technical support.

Copyright 2017, ARRIS Enterprises, LLC. All rights reserved.

Corporate Headquarters
ARRIS · Suwanee · Georgia · 30024 · USA
T: 1-678-473-2000 F: 1-678-473-8470
www.arris.com

DRAFT